mobilitie®
intelligent infrastructure

Attachment C

SITE ID/CASCADE ID-CANDIDATE LETTER:
9CAB008036/SF90XSA24B
LATITUDE/LONGITUDE:
37.809545/-122.263902
CROSS STREET:
21ST ST., E. OF KAISER PLAZA
CITY, STATE, ZIP:
OAKLAND, CA 94612

(E) 30'-0" STEEL LIGHT POLE

IF YOU DIG IN ANY STATE DIAL 811 FOR THE LOCAL "ONE CALL CENTER" – IT'S THE LAW

THE UTILITIES SHOWN HEREIN ARE FOR THE CONTRACTORS CONVENIENCE ONLY. THERE MAY BE OTHER UTILITIES NOT SHOWN ON THESE PLANS. THE ENGINEER/SURVEYOR ASSUMES NO RESPONSIBILITY FOR THE LO-CATIONS SHOWN AND IT SHALL BE THE CONTRACTOR'S RESPONSIBILITY TO VERIFY ALL THE UTILITIES WITHIN THE LIMITS OF THE WORK. ALL DAMAGE MADE TO THE (E) UTILITIES BY THE CONTRACTOR SHALL BE THE SOLE RESPONSIBILITY OF THE CONTRACTOR.

GENERAL NOTES

THE FACILITY IS UNMANNED AND NOT FOR HUMAN HABITATION. A TECHNICIAN WILL VISIT THE SITE AS REQUIRED FOR ROUTINE MAINTENANCE. THE PROJECT WILL NOT RESULT IN ANY SIGNIFICANT DISTURBANCE OF EFFECT ON DRAINAGE; NO SANITARY SEWER SERVICE, POTABLE WATER OR TRASH DISPOSAL IS REQUIRED AND NO COMMERCIAL SIGNAGE IS (N).

SITE INFORMATION

SITE ID:	9CAB008036
CASCADE ID:	SF90XSA24B
LATITUDE:	37.809545
LONGITUDE:	-122.263902
CROSS STREET:	21ST ST., E. OF KAISER PLAZA
CITY, STATE, ZIP:	OAKLAND, CA 94612
COUNTY:	ALAMEDA COUNTY
JURISDICTION:	CITY OF OAKLAND
PROPERTY OWNER:	PUBLIC RIGHT-OF-WAY
APPLICANT:	MOBILITIE, LLC 2955 RED HILL AVENUE, STE. 200, COSTA MESA, CA 92626 APPLICANT: JAMES SINGLETON PHONE: 605-814-0584 EMAIL: JSingleton@mobilitie.com

ENGINEER

CABLE ENGINEERING SERVICES
10640 SEPULVEDA BLVD. SUITE 1
MISSION HILLS, CA. 91345

JEREMY HARMON
(818) 898-2352

DO NOT SCALE DRAWINGS

CONTRACTORS SHALL VERIFY ALL PLANS, (E) DIMENSIONS & FIELD CONDITIONS ON THE JOB SITE & SHALL IMMEDIATELY NOTIFY THE ARCHITECT/ENGINEER IN WRITING OF ANY DISCREPANCIES BEFORE PROCEEDING WITH THE WORK OR BE RESPONSIBLE FOR SAME.

LOCATION MAPS

VICINITY MAP

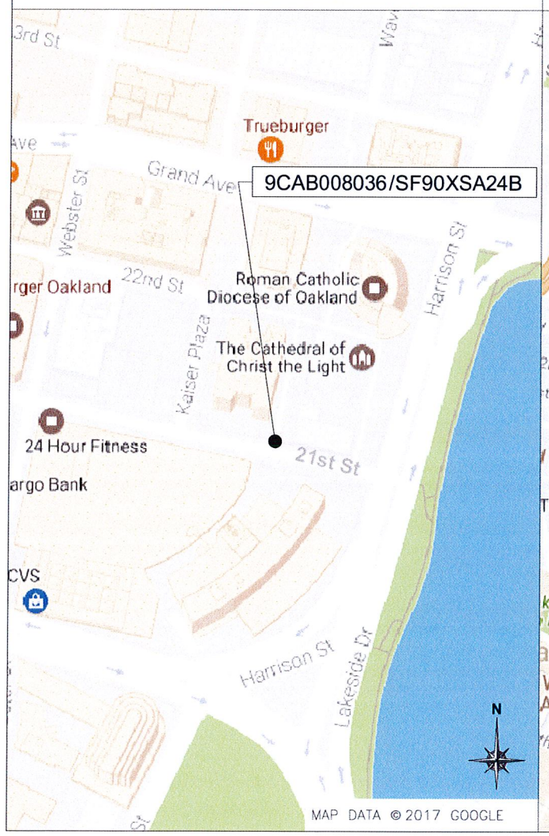

REGIONAL MAP

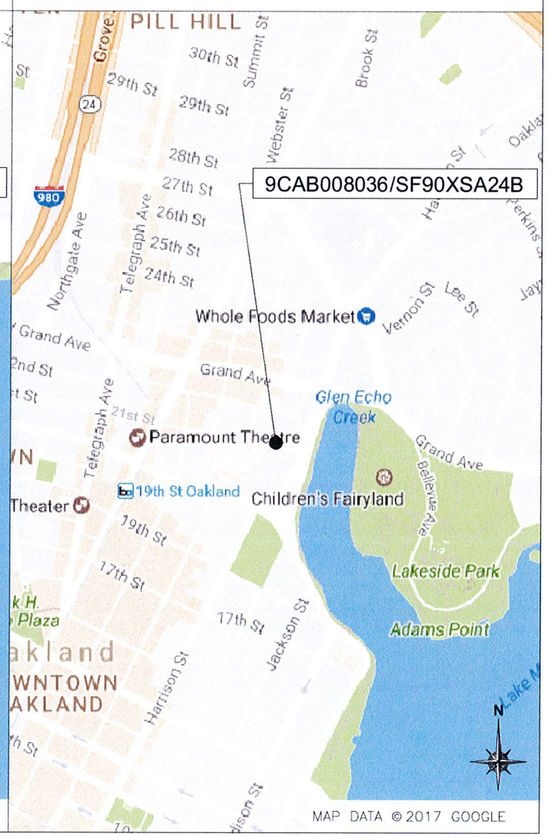

PROJECT DESCRIPTION

END USER PROPOSES TO INSTALL EQUIPMENT ON AN EXISTING STEEL POLE WITHIN AN EXISTING RIGHT-OF-WAY.
THE SCOPE WILL CONSIST OF THE FOLLOWING:

- INSTALL PROPOSED SMALL SCALE WIRELESS EQUIPMENT ON AN EXISTING STEEL LIGHT POLE

CODES

2015 INTERNATIONAL BUILDING CODE
2017 NATIONAL ELECTRICAL CODE
TIA/EIA-222-G-2 OR LATEST EDITION
LOCAL BUILDING/PLANNING CODE

DRAWING INDEX

SHEET NO:	SHEET TITLE
T-1	TITLE SHEET
SP-1	EXHIBIT PHOTO & SITE PLAN
SP-2	OVERALL SITE PLAN
EV-1	POLE ELEVATIONS
EV-2	POLE ELEVATIONS
PL-1	PLUMBING & RISER DIAGRAM
EQ-1	EQUIPMENT DETAILS
EQ-2	EQUIPMENT DETAILS
E-1	ELECTRICAL DETAILS
E-2	ELECTRICAL PLAN
G-1	GROUNDING DETAILS
GN-1	GENERAL NOTES
GN-2	GENERAL NOTES
GN-3	GENERAL NOTES
TC-1	TRAFFIC CONTROL PLAN

mobilitie®
intelligent infrastructure

CES cable engineering services
PRESCOTT COMMUNICATIONS INC.
10640 Sepulveda Blvd. Suite 1, Mission Hills, CA 91345
Phone No.: (818)898-2352 Fax No.: (818)898-9186

PROJECT NO:	9CAB008036
DRAWN BY:	MD
CHECKED BY:	JM

0	06/16/17	90% CONSTRUCTION
1	09/28/17	REVISED PER PG&E STANDARDS
2	04/05/18	REVISED PER NEW PG&E STANDARDS

IT IS A VIOLATION OF THE LAW FOR ANY PERSON, UNLESS THEY ARE ACTING UNDER THE DIRECTION OF A LICENSED PROFESSIONAL ENGINEER, TO ALTER THIS DOCUMENT

9CAB008036
OAKLAND, CA 94612
(E) 30'-0" STEEL LIGHT POLE

SHEET TITLE
TITLE SHEET

SHEET NUMBER
T-1



EXHIBIT PHOTO

SCALE: NOT TO SCALE

1

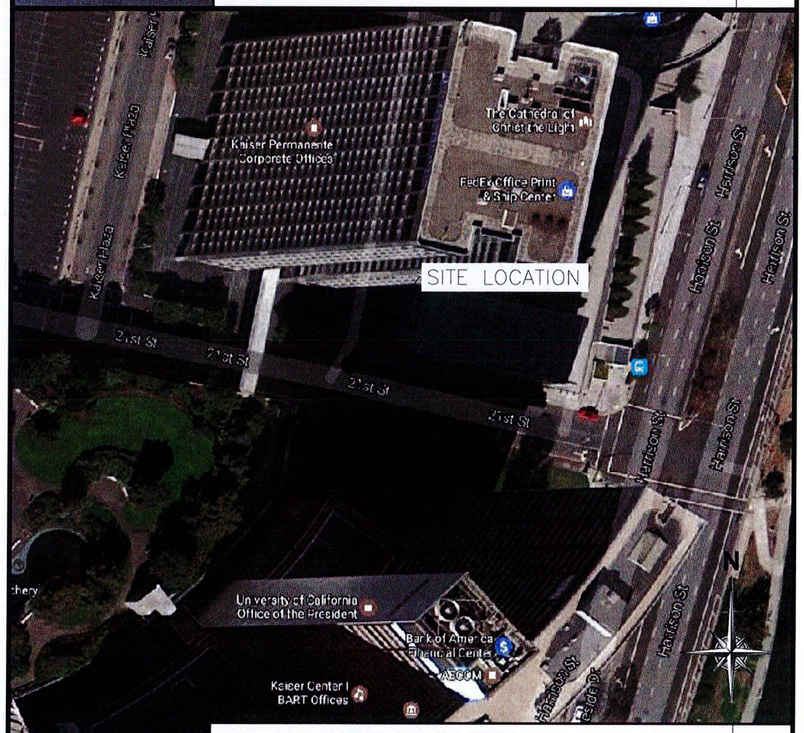

AERIAL SITE LOCATION

SCALE: NOT TO SCALE

2

SYMBOLOGY

SYMBOL	DESCRIPTION	SYMBOL	DESCRIPTION	SYMBOL	DESCRIPTION
EOD	EDGE OF DIRT		EXISTING CUT		ANCHOR
WL	WHITE LINE	-X-X-X-X-X-	FENCE		FIRE HYDRANT
R/OW	RIGHT OF WAY		WALL		UTILITY VALVE
EOP	EDGE OF PAVEMENT		DRIVEWAY		UTILITY MANHOLE
CL	CENTER LINE		BUSHES		SEWER MANHOLE
C/F	CURBFACE		TREE		SQUARE VENT
P/L	PROPERTY LINE		UTILITY POLE		ROUND VENT
(E)	EXISTING		STREET LIGHT		DIG ALERTS
(N)	NEW		PROPOSED SITE POLE		TRAFFIC FLOW
	CONDUIT CURVE DATA		PARKING METER/STREET SIGN		ADA CURB RAMP
	SPOT ELEVATION	X X-Y	DETAIL REFERENCE		

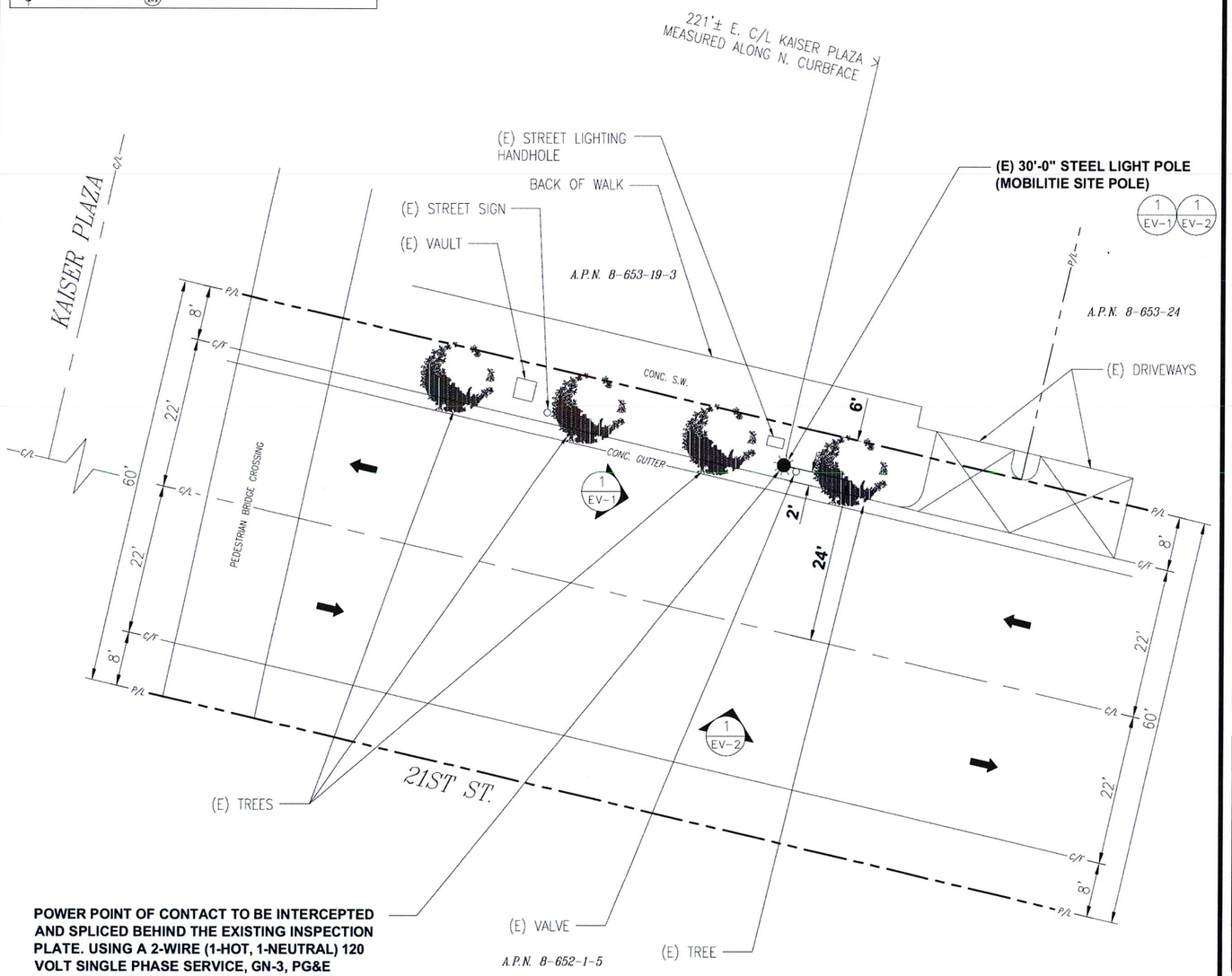

POWER POINT OF CONTACT TO BE INTERCEPTED AND SPLICED BEHIND THE EXISTING INSPECTION PLATE. USING A 2-WIRE (1-HOT, 1-NEUTRAL) 120 VOLT SINGLE PHASE SERVICE, GN-3, PG&E UTILITY BULLETIN TD-027911B-004, GENERAL INFORMATION NOTE #3 (MOBILITIE POINT OF CONNECTION)

UNDERGROUND UTILITIES NOTE:
THE LOCATIONS AND EXISTENCE OF ANY UNDERGROUND PIPES, STRUCTURES OR CONDUITS SHOWN ON THIS PLAN WERE OBTAINED BY A SEARCH OF AVAILABLE RECORDS. THERE MAY BE EX. UTILITIES OTHER THAN THOSE SHOWN ON THIS PLAN. THE CONTRACTOR IS REQUIRED TO TAKE PRECAUTIONARY MEASURES TO PROTECT THE UTILITY LINES SHOWN AND ANY OTHER LINES NOT SHOWN ON THIS PLAN.

CONSTRUCTION NOTE:
CONTRACTOR TO TAP IN AT THE POC AND RUN A NEW, SEPARATE CIRCUIT THROUGH CITY CONDUIT TO GO TO THE POLE.

N

ENLARGED SITE PLAN

SCALE: 1" = 10'

3

mobilitie
intelligent infrastructure

CES cable engineering services
PRESCOTT COMMUNICATIONS INC.
10640 Sepulveda Blvd. Suite 1, Mission Hills, CA 91345
Phone No.: (818)898-2352 Fax No.: (818)898-9186

PROJECT NO:	9CAB008036
DRAWN BY:	MD
CHECKED BY:	JM

0	06/16/17	90% CONSTRUCTION
1	09/28/17	REVISED PER PG&E STANDARDS
2	04/05/18	REVISED PER NEW PG&E STANDARDS

IT IS A VIOLATION OF THE LAW FOR ANY PERSON, UNLESS THEY ARE ACTING UNDER THE DIRECTION OF A LICENSED PROFESSIONAL ENGINEER, TO ALTER THIS DOCUMENT

9CAB008036
OAKLAND, CA 94612
(E) 30'-0" STEEL LIGHT POLE

SHEET TITLE
EXHIBIT PHOTO & SITE PLAN

SHEET NUMBER
SP-1

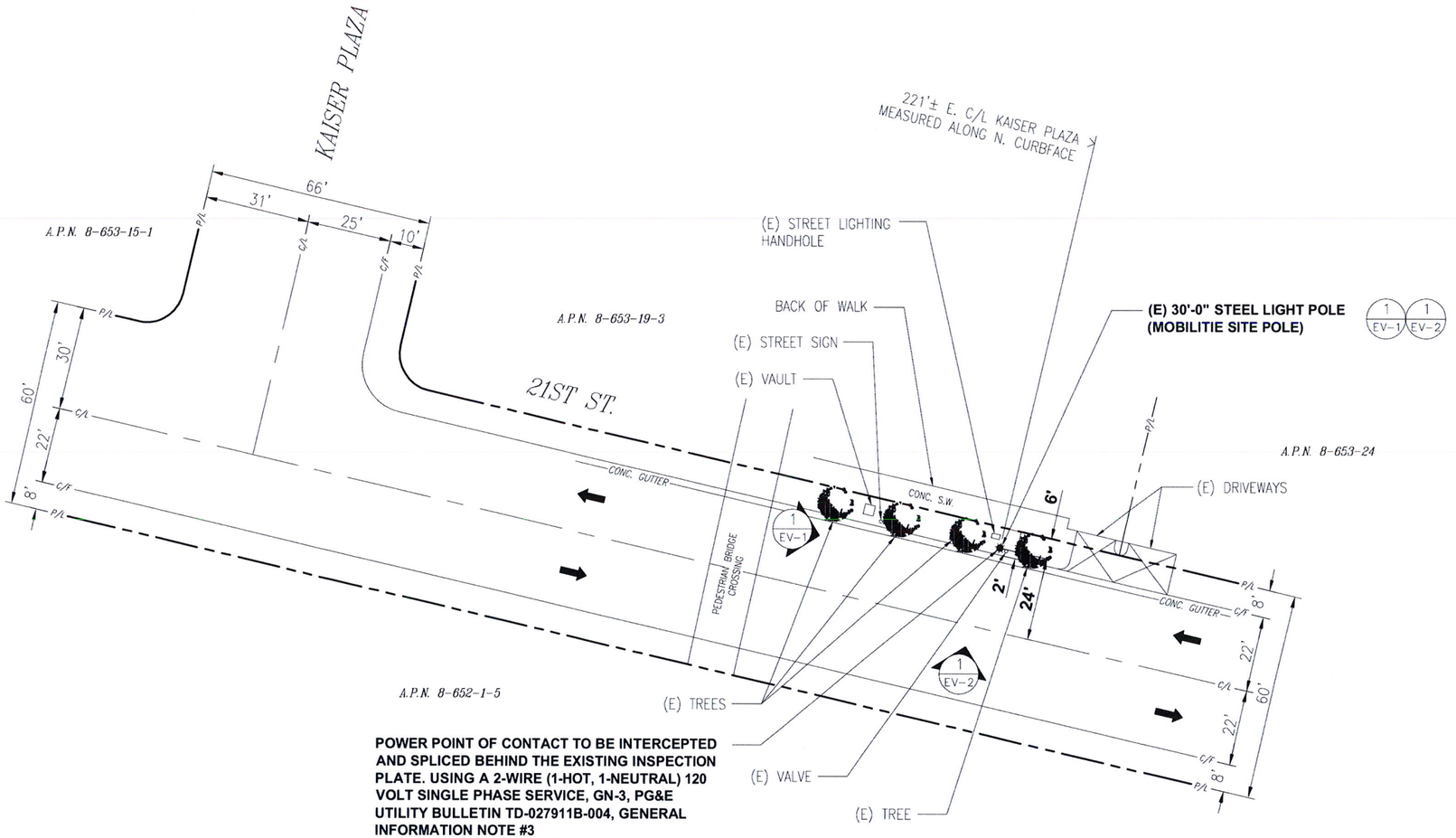

POWER POINT OF CONTACT TO BE INTERCEPTED AND SPLICED BEHIND THE EXISTING INSPECTION PLATE. USING A 2-WIRE (1-HOT, 1-NEUTRAL) 120 VOLT SINGLE PHASE SERVICE, GN-3, PG&E UTILITY BULLETIN TD-027911B-004, GENERAL INFORMATION NOTE #3
(MOBILITIE POINT OF CONNECTION)

SYMBOLOGY

SYMBOL	DESCRIPTION	SYMBOL	DESCRIPTION	SYMBOL	DESCRIPTION
E/OD	EDGE OF DIRT		EXISTING CUT		ANCHOR
W/L	WHITE LINE	-X-X-X-X-X-	FENCE		FIRE HYDRANT
R/OW	RIGHT OF WAY		WALL		UTILITY VALVE
E/OP	EDGE OF PAVEMENT		DRIVEWAY		UTILITY MANHOLE
C/L	CENTER LINE		BUSHES		SEWER MANHOLE
C/F	CURBFACE		TREE		SQUARE VENT
P/L	PROPERTY LINE		UTILITY POLE		ROUND VENT
(E)	EXISTING		STREET LIGHT		DIG-ALERTS
(N)	NEW		PROPOSED SITE POLE		TRAFFIC FLOW
	CONDUIT CURVE DATA		PARKING METER/STREET SIGN		ADA CURB RAMP
	SPOT ELEVATION	X Y-3	DETAIL REFERENCE		

UNDERGROUND UTILITIES NOTE:
THE LOCATIONS AND EXISTENCE OF ANY UNDERGROUND PIPES, STRUCTURES OR CONDUITS SHOWN ON THIS PLAN WERE OBTAINED BY A SEARCH OF AVAILABLE RECORDS. THERE MAY BE EX. UTILITIES OTHER THAN THOSE SHOWN ON THIS PLAN. THE CONTRACTOR IS REQUIRED TO TAKE PRECAUTIONARY MEASURES TO PROTECT THE UTILITY LINES SHOWN AND ANY OTHER LINES NOT SHOWN ON THIS PLAN.

CONSTRUCTION NOTE:
CONTRACTOR TO TAP IN AT THE POC AND RUN A NEW, SEPARATE CIRCUIT THROUGH CITY CONDUIT TO GO TO THE POLE.

N

OVERALL SITE PLAN

SCALE: 1" = 20'

1

mobilitie
intelligent infrastructure

cable engineering services
PRESCOTT COMMUNICATIONS INC.
10640 Sepulveda Blvd. Suite 1, Mission Hills, CA 91345
Phone No.: (818)898-2352 Fax No.: (818)898-9186

PROJECT NO:	9CAB008036
DRAWN BY:	MD
CHECKED BY:	JM

0	06/16/17	90% CONSTRUCTION
1	09/28/17	REVISED PER PG&E STANDARDS
2	04/05/18	REVISED PER NEW PG&E STANDARDS

IT IS A VIOLATION OF THE LAW FOR ANY PERSON, UNLESS THEY ARE ACTING UNDER THE DIRECTION OF A LICENSED PROFESSIONAL ENGINEER, TO ALTER THIS DOCUMENT

9CAB008036
OAKLAND, CA 94612
(E) 30'-0" STEEL LIGHT POLE

SHEET TITLE
OVERALL SITE PLAN

SHEET NUMBER
SP-2

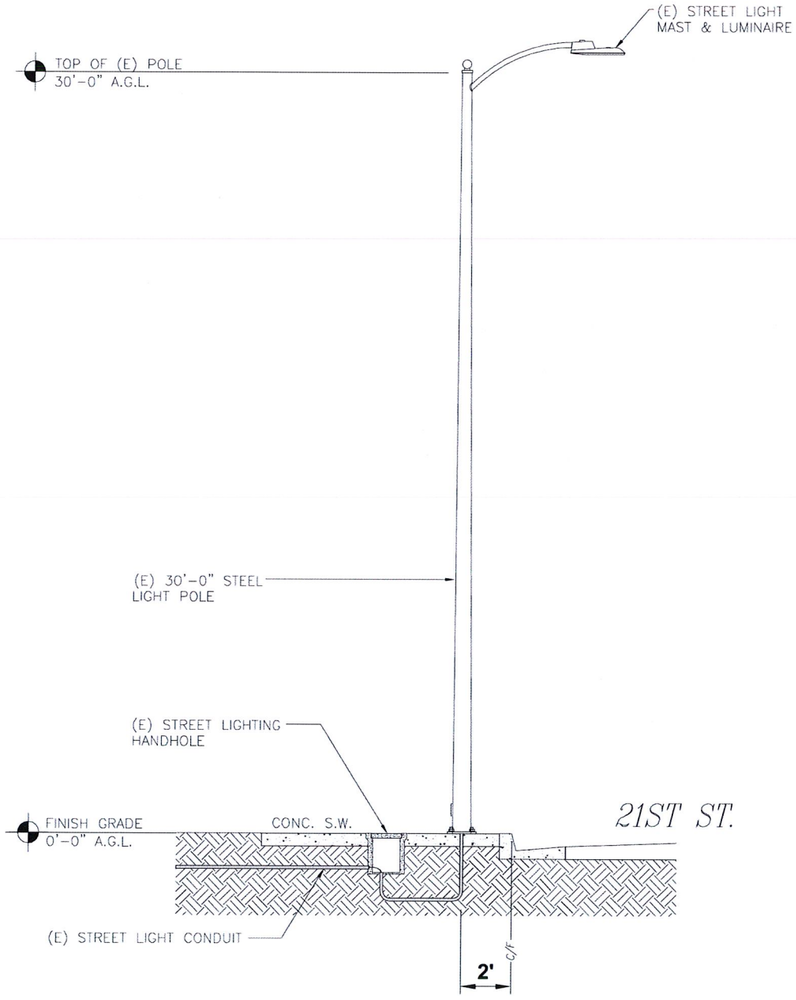

EXISTING SIDE VIEW

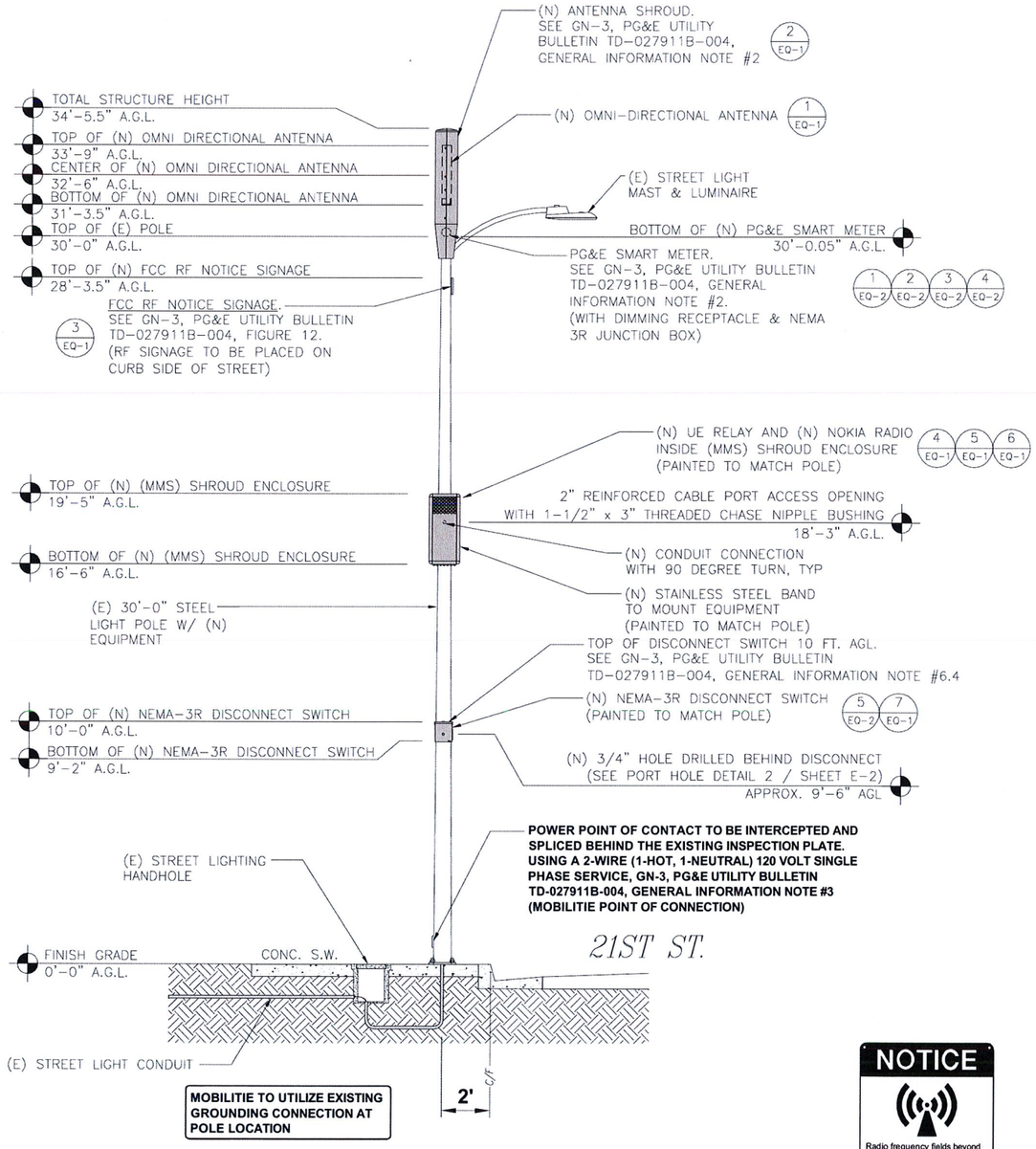

NEW SIDE VIEW

NON EMERGENCY NODE SITE POWER SHUT DOWN PROCEDURES

1. FOR NON EMERGENCY/SCHEDULED POWER SHUT DOWN
   - CALL MOBILITIE **(877) 244-7889**
   - 24 HRS PRIOR TO SCHEDULED POWER SHUT OFF PROVIDE THE FOLLOWING INFORMATION:
     - o SITE NUMBER IDENTIFIED ON SITE NUMBERING STICKER
     - o YOUR NAME AND REASON FOR POWER SHUTOFF
     - o PROVIDE DURATION OF OUTAGE
   - PULL DISCONNECT HANDLE TO "OFF" POSITION
   - POWER SHUT OFF VERIFICATION WITH APPROVED PG&E PROCEDURES
   - NOTIFY MOBILITIE UPON COMPLETION OF WORK
   - RESTORE POWER BY PLACING POWER DISCONNECT HANDLE IN THE "ON" POSITION
   - REINSTALL LOCK ON POWER HANDLE
2. EMERGENCY POWER SHUT OFF
   - CALL MOBILITIE **(877) 244-7889**
   - PROVIDE THE FOLLOWING INFORMATION:
     - o SITE NUMBER IDENTIFIED ON SITE NUMBERING STICKER
     - o YOUR NAME AND REASON FOR POWER SHUTOFF
     - o PROVIDE DURATION OF OUTAGE
   - PULL DISCONNECT HANDLE TO "OFF" POSITION
   - POWER SHUT OFF VERIFICATION WITH APPROVED PG&E PROCEDURES
   - NOTIFY MOBILITIE UPON COMPLETION OF WORK
   - RESTORE POWER BY PLACING POWER DISCONNECT HANDLE IN THE "ON" POSITION
   - REINSTALL LOCK ON POWER HANDLE

NOTES:

1. ALL HARDWARE SHALL BE STAINLESS STEEL.
2. ALL CABLES SHALL BE SECURED TO POLE EVERY 36" OR LESS.
3. LIGHTNING RODS SHALL BE INCLUDED AS REQUIRED.
4. STRUCTURAL BACKFILL TO BE COMPACTED IN 6" MAXIMUM LAYERS TO 95% OF CONTENT IN ACCORDANCE WITH ASTM D698. ADDITIONALLY, STRUCTURAL BACKFILL MUST HAVE A MINIMUM COMPACTED UNIT WEIGHT OF 100 POUNDS PER CUBIC FOOT (16kN/m3)

NOTICE

Radio frequency fields beyond this point may exceed the FCC general public exposure limit.

Obey all posted signs and site guidelines for working in radio frequency environments.

Site ID: 9CAB008036
Contact 877-244-7889

mobilitie

- **RF WARNING SIGN WILL BE PAINTED TO MATCH NEW POLE.**
- **SIGN TO BE NO LARGER THAN 3"X 4".**
- **SIGN TO BE MOUNTED ON CURB SIDE.**

POLE ELEVATIONS

SCALE: 1" = 3'

1

mobilitie
intelligent infrastructure

cable engineering services
PRESCOTT COMMUNICATIONS INC.
10640 Sepulveda Blvd. Suite 1, Mission Hills, CA 91345
Phone No.: (818)898-2352 Fax No.: (818)898-9186

PROJECT NO:	9CAB008036
DRAWN BY:	MD
CHECKED BY:	JM

0	06/16/17	90% CONSTRUCTION
1	09/28/17	REVISED PER PG&E STANDARDS
2	04/05/18	REVISED PER NEW PG&E STANDARDS

IT IS A VIOLATION OF THE LAW FOR ANY PERSON, UNLESS THEY ARE ACTING UNDER THE DIRECTION OF A LICENSED PROFESSIONAL ENGINEER, TO ALTER THIS DOCUMENT

9CAB008036
OAKLAND, CA 94612
(E) 30'-0" STEEL LIGHT POLE

SHEET TITLE
POLE ELEVATIONS

SHEET NUMBER
EV-1

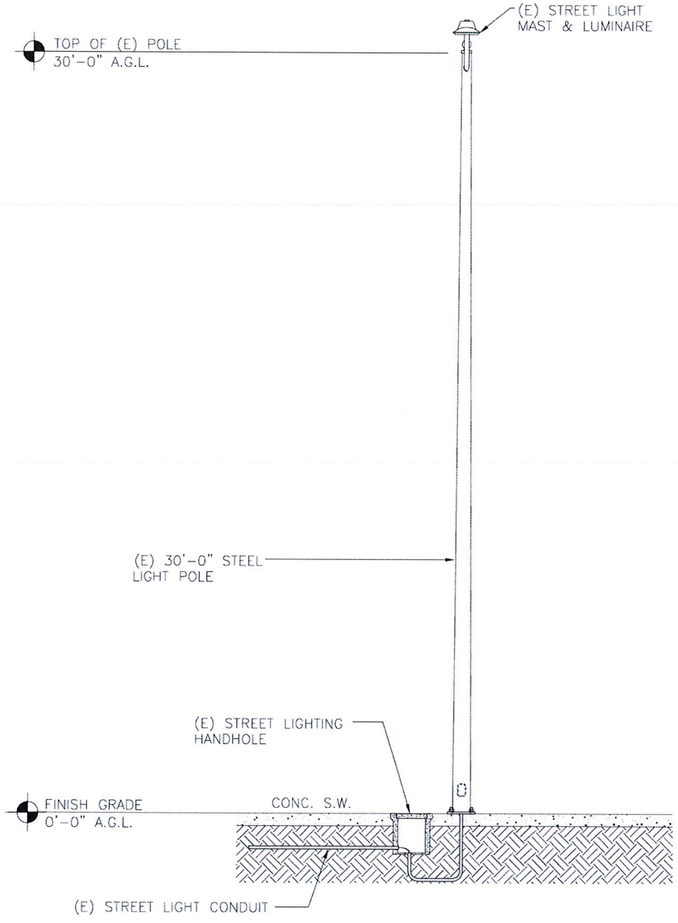

EXISTING FRONT VIEW

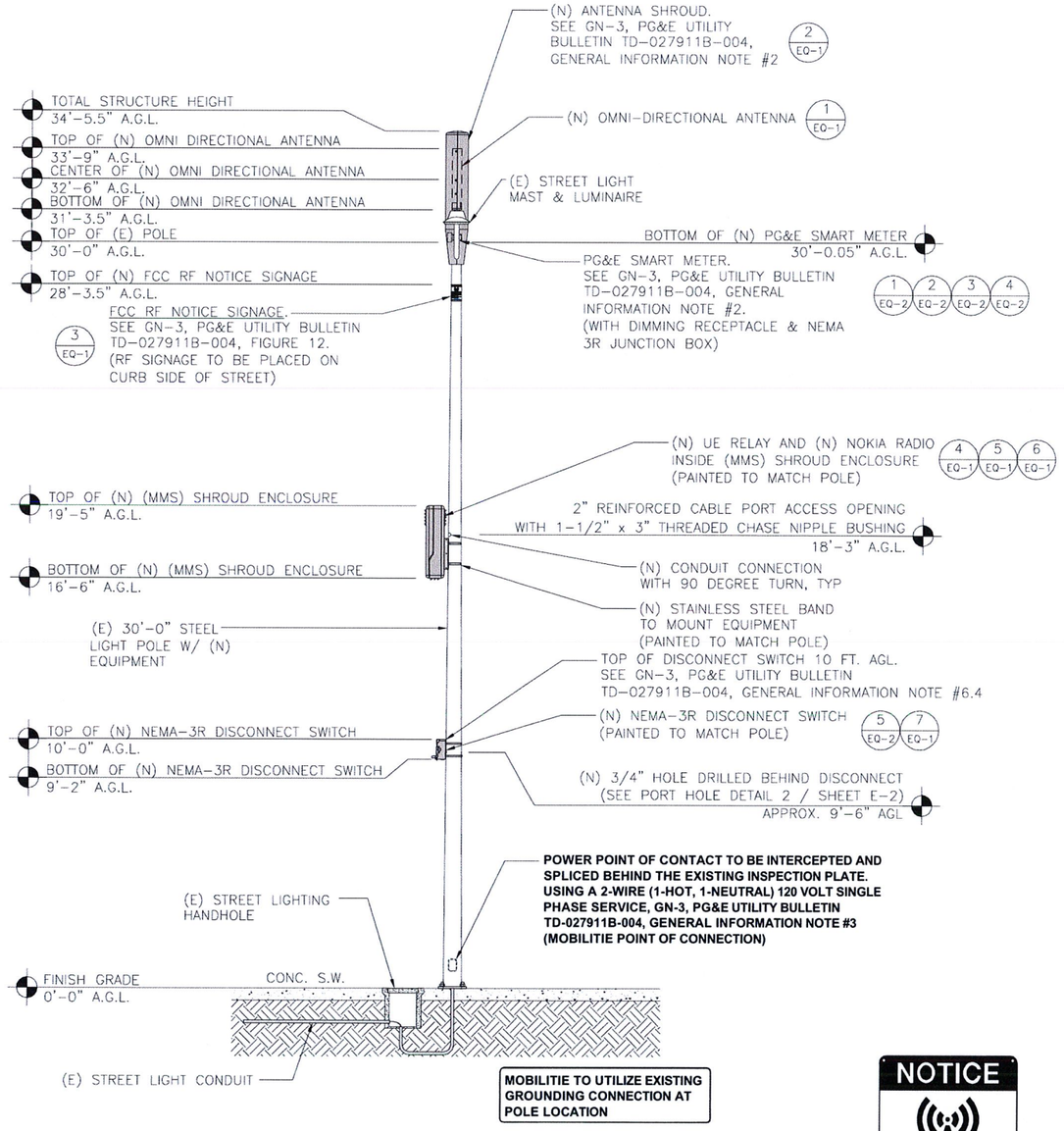

NEW FRONT VIEW

NON EMERGENCY NODE SITE POWER SHUT DOWN PROCEDURES

1. FOR NON EMERGENCY/SCHEDULED POWER SHUT DOWN
   - CALL MOBILITIE **(877) 244-7889**
   - 24 HRS PRIOR TO SCHEDULED POWER SHUT OFF PROVIDE THE FOLLOWING INFORMATION:
     - SITE NUMBER IDENTIFIED ON SITE NUMBERING STICKER
     - YOUR NAME AND REASON FOR POWER SHUTOFF
     - PROVIDE DURATION OF OUTAGE
   - PULL DISCONNECT HANDLE TO "OFF" POSITION
   - POWER SHUT OFF VERIFICATION WITH APPROVED PG&E PROCEDURES
   - NOTIFY MOBILITIE UPON COMPLETION OF WORK
   - RESTORE POWER BY PLACING POWER DISCONNECT HANDLE IN THE "ON" POSITION
   - REINSTALL LOCK ON POWER HANDLE
2. EMERGENCY POWER SHUT OFF
   - CALL MOBILITIE **(877) 244-7889**
   - PROVIDE THE FOLLOWING INFORMATION:
     - SITE NUMBER IDENTIFIED ON SITE NUMBERING STICKER
     - YOUR NAME AND REASON FOR POWER SHUTOFF
     - PROVIDE DURATION OF OUTAGE
   - PULL DISCONNECT HANDLE TO "OFF" POSITION
   - POWER SHUT OFF VERIFICATION WITH APPROVED PG&E PROCEDURES
   - NOTIFY MOBILITIE UPON COMPLETION OF WORK
   - RESTORE POWER BY PLACING POWER DISCONNECT HANDLE IN THE "ON" POSITION
   - REINSTALL LOCK ON POWER HANDLE

NOTES:

1. ALL HARDWARE SHALL BE STAINLESS STEEL.
2. ALL CABLES SHALL BE SECURED TO POLE EVERY 36" OR LESS.
3. LIGHTNING RODS SHALL BE INCLUDED AS REQUIRED.
4. STRUCTURAL BACKFILL TO BE COMPACTED IN 6" MAXIMUM LAYERS TO 95% OF CONTENT IN ACCORDANCE WITH ASTM D698. ADDITIONALLY, STRUCTURAL BACKFILL MUST HAVE A MINIMUM COMPACTED UNIT WEIGHT OF 100 POUNDS PER CUBIC FOOT (16kN/m3)



- **RF WARNING SIGN WILL BE PAINTED TO MATCH NEW POLE.**
- **SIGN TO BE NO LARGER THAN 3"X 4".**
- **SIGN TO BE MOUNTED ON CURB SIDE.**

POLE ELEVATIONS — SCALE: 1" = 3' — 1

mobilitie
intelligent infrastructure

cable engineering services
PRESCOTT COMMUNICATIONS INC.
10640 Sepulveda Blvd. Suite 1, Mission Hills, CA 91345
Phone No.: (818)898-2352 Fax No.: (818)898-9186

PROJECT NO:	9CAB008036
DRAWN BY:	MD
CHECKED BY:	JM

0	06/16/17	90% CONSTRUCTION
1	09/28/17	REVISED PER PG&E STANDARDS
2	04/05/18	REVISED PER NEW PG&E STANDARDS

IT IS A VIOLATION OF THE LAW FOR ANY PERSON, UNLESS THEY ARE ACTING UNDER THE DIRECTION OF A LICENSED PROFESSIONAL ENGINEER, TO ALTER THIS DOCUMENT

9CAB008036
OAKLAND, CA 94612
(E) 30'-0" STEEL LIGHT POLE

SHEET TITLE
POLE ELEVATIONS

SHEET NUMBER
EV-2

NOTE:
1. CABLING DIAGRAM IS FOR CLARITY OF CABLE ROUTE AND TERMINATION ONLY. CONTRACTOR SHALL INSTALL CABLES WITH MINIMAL VISUAL IMPACT ON (E) STEEL LIGHT POLE. SEE ELEVATION DRAWING FOR EQUIPMENT AND ANTENNA LOCATIONS.

EQUIPMENT CHART			
QTY.	DESCRIPTION	DIMENSIONS	WEIGHT
1	ANTENNA MODEL #AW3477-S1-G (OMNI DIRECTIONAL ANTENNA)	29.5" x 4.5"ø	7 LBS
1	CONCEALFAB ANTENNA SHROUD	47.375" x 17" x 10.75"Ø	16.11 LBS
1	(MMS) SHROUD ENCLOSURE	35" x 15.5" x 9"	12 LBS
1	AIRSPAN IR460 (UE RELAY)	13" x 7"Ø	8.8 LBS
1	NOKIA RADIO (B41 FWHR) HIGH POWER	7.7" x 12.9" x 6.3"	24.64 LBS
3	FANS (2 SMALL, 1 LARGER)		2.76 LBS
1	SMART METER	2.67" x 4.5"Ø	–
1	RECEPTACLE	–	–
1	ALLEN-BRADLEY NEMA 3R JUNCTION BOX	4.53" x 2.58" x 2.17"	–
1	SIEMENS DISCONNECT SWITCH MODEL #GNF321 NEMA-3R	9.9" X 8.8" X 4.5"	5 LBS.
TOTAL WEIGHT			76.31 LBS

EQUIPMENT CHART

SCALE: NOT TO SCALE

2

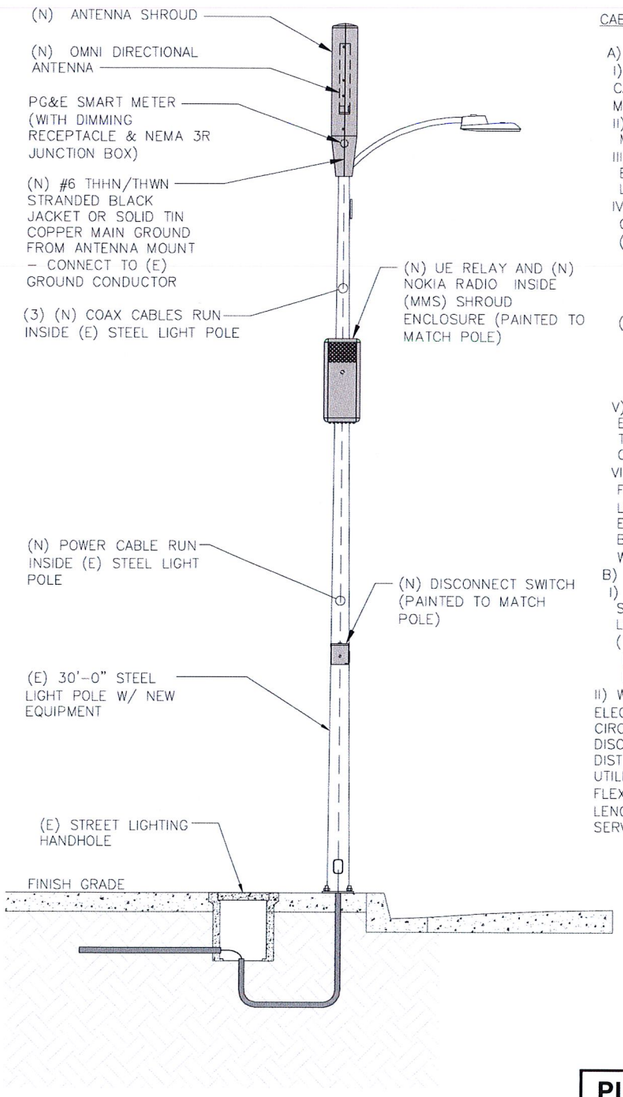

CABLING NOTES:

A) WOOD, CONCRETE AND EXISTING METALLIC POLES
I) FROM GRADE LINE TO 11'-0" ABOVE GRADE, ALL CABLES/CONDUCTORS EXCEPT GROUNDING CONDUCTOR MUST RUN IN RIGID GALVANIZED STEEL CONDUIT (RGS)
II) GROUNDING CONDUCTORS IN EXPOSED LOCATIONS MUST BE INSTALLED IN PVC.
III) IN EARTH INSTALL PVC CONDUIT FOR BACKHAUL AND ELECTRICAL SERVICE. TRANSITION TO RGS AT GRADE LINE.
IV) ABOVE 11'-0" ALL CABLES (POWER, ETHERNET, COAXIAL) MUST RUN IN PVC UTILITY POLE RISER.
(1) AT MAJOR EQUIPMENT, EXTEND UTILITY DUCT IMMEDIATELY ADJACENT TO THE EQUIPMENT. INSTALL CABLES IN THE UTILITY POLE RISER CREATING CABLE DRIP LOOPS NOT LESS THAN THE CABLE BENDING RADIUS.
(2) INSIDE THE UTILITY POLE RISER, UTILIZE ½" COAX BLOCKS WITH LAG SCREWS TO SUPPORT COAX, RADIO AND MW POWER, RF COAX, AND ETHERNET CABLES TO WITHIN 12" OF THE EQUIPMENT BEING SERVED AND ON INTERVALS NOT TO EXCEED 6'.
V) FOR UNDERGROUND HFC/PUBLIC BACKHAUL, ROUTE ETHERNET CABLE IN CONDUIT UP THE POLE AND ENTER THE UTILITY POLE RISER. SEAL EXPOSED END OF CONDUIT WITH A CABLE TERMINATION FITTING.
VI) BY APPROVAL IN SELECT CASES LIQUID-TIGHT FLEXIBLE METALLIC CONDUIT (LFMC) MAY BE USED IN LENGTHS NOT TO EXCEED 36" TO EXTEND THE ELECTRICAL SERVICE CONDUIT TO THE AC DISTRIBUTION BOX. EXAMPLE: UTILITY-REQUIRED DISCONNECT ON POLE W/ AC DISTRIBUTION BOX ON OPPOSITE SIDE OF POLE.
B) (N) METALLIC POLES
I) PROCURE (N) POLES WITH SUITABLE HAND HOLES SUCH THAT HAND HOLES EXIST AT ALL EQUIPMENT LOCATIONS.
(1) WITH CLIENT APPROVAL IN SELECT CASES TO FACILITATE IMPROVED APPEARANCE, ½" COAXIAL CABLES MAY BE "SUPERFLEX" IN LIEU OF LDF-4.
II) WHERE POSSIBLE, INSTALL POLE BASE SUCH THAT THE ELECTRICAL FEED AND BACKHAUL (IF UNDERGROUND) CIRCUIT ENTER THE POLE THROUGH THE POLE BASE. IF A DISCONNECTING MEANS SEPARATE FROM THE AC DISTRIBUTION BOX IS REQUIRED BY JURISDICTION OR UTILITY, WITH APPROVAL IN SELECT CASES LIQUID-TIGHT FLEXIBLE METALLIC CONDUIT (LFMC) MAY BE USED IN LENGTHS NOT TO EXCEED 36" TO EXTEND THE ELECTRICAL SERVICE CONDUIT TO THE AC DISTRIBUTION BOX.

PLUMBING DIAGRAM

SCALE: NOT TO SCALE

1

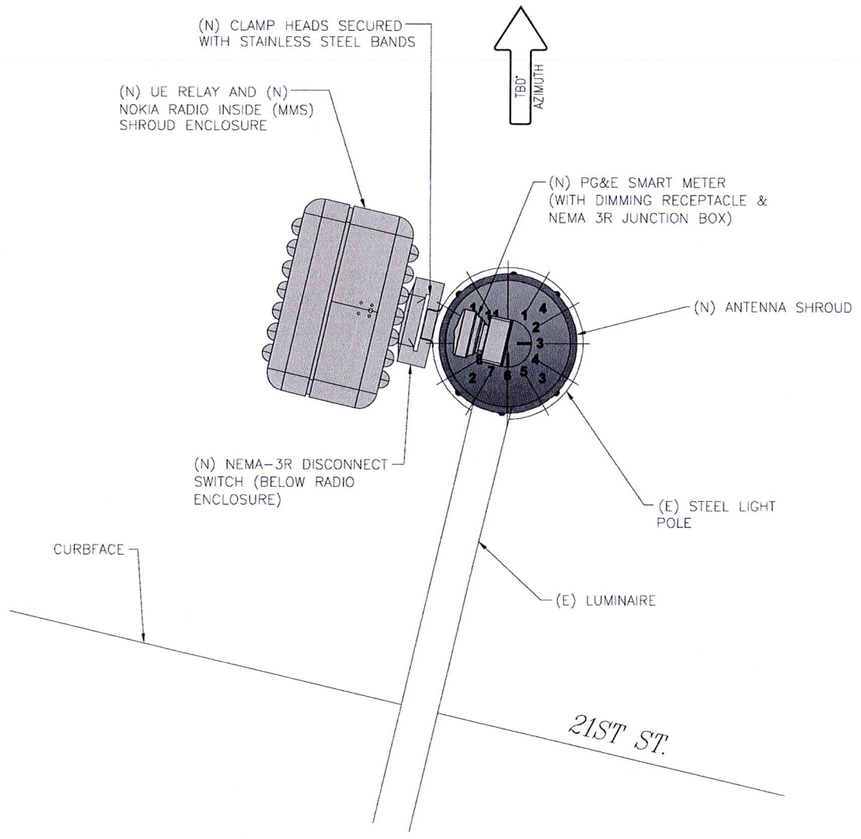

RISER DIAGRAM

SCALE: NOT TO SCALE

3

mobilitie
intelligent infrastructure

CES cable engineering services
PRESCOTT COMMUNICATIONS INC.
10640 Sepulveda Blvd. Suite 1, Mission Hills, CA 91345
Phone No.: (818)898-2352 Fax No.: (818)898-9186

PROJECT NO:	9CAB008036
DRAWN BY:	MD
CHECKED BY:	JM

0	06/16/17	90% CONSTRUCTION
1	09/28/17	REVISED PER PG&E STANDARDS
2	04/05/18	REVISED PER NEW PG&E STANDARDS

IT IS A VIOLATION OF THE LAW FOR ANY PERSON, UNLESS THEY ARE ACTING UNDER THE DIRECTION OF A LICENSED PROFESSIONAL ENGINEER, TO ALTER THIS DOCUMENT

9CAB008036
OAKLAND, CA 94612
(E) 30'-0" STEEL LIGHT POLE

SHEET TITLE
PLUMBING & RISER DIAGRAM

SHEET NUMBER
PL-1

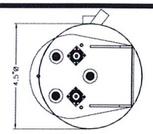

PLAN

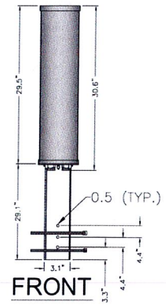

FRONT

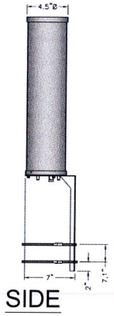

SIDE

MANUFACTURER:
ALPHA WIRELESS
MODEL: AW3477-S1-G
HEIGHT: 29.5 IN
DIAMETER: 4.5 IN Ø
WEIGHT: 7 LBS

ALPHA WIRELESS

ALPHA AW3477-S1-G OMNI (B41)

SCALE N.T.S. | 1

MANUFACTURER:		CONCEALFAB
MODEL NO.:		007452-AABBCC
DIMENSIONS:		TOTAL WEIGHT:
A	47.375"	16.11 LBS
B	17"	
C	10.75" Ø	

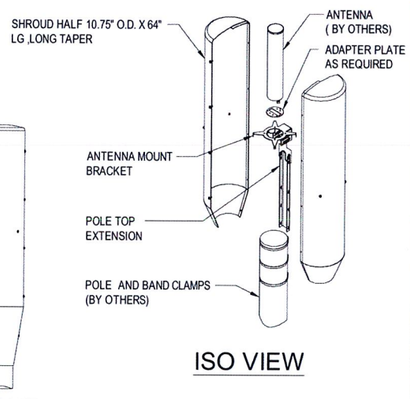

ISO VIEW

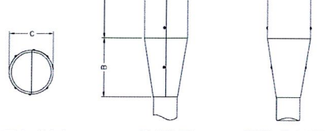

PLAN SIDE FRONT

ANTENNA SHROUD

SCALE N.T.S. | 2

NOTICE

Radio frequency fields beyond this point may exceed the FCC general public exposure limit.

Obey all posted signs and site guidelines for working in radio frequency environments.

Site ID: 9CAB008036

Contact 877-244-7889

mobilitie

In accordance with Federal Communications Commission rules on radio frequency emissions 47 CFR 1.1307(b)

- **RF WARNING SIGN WILL BE PAINTED TO MATCH EXISTING POLE.**
- **SIGN TO BE NO LARGER THAN 3"X 4".**
- **SIGN TO BE MOUNTED ON CURB SIDE.**

ANTENNA RF SIGNAGE

SEE SHEET GN-3, PG&E UTILITY BULLETIN TD-027911B-004, FIGURE 12 - SAMPLE RF SIGN

NON EMERGENCY NODE SITE POWER SHUT DOWN PROCEDURES

1. FOR NON EMERGENCY/SCHEDULED POWER SHUT DOWN
   - CALL MOBILITIE **(877) 244-7889**
   - 24 HRS PRIOR TO SCHEDULED POWER SHUT OFF PROVIDE THE FOLLOWING INFORMATION:
     - SITE NUMBER IDENTIFIED ON SITE NUMBERING STICKER
     - YOUR NAME AND REASON FOR POWER SHUTOFF
     - PROVIDE DURATION OF OUTAGE
   - PULL DISCONNECT HANDLE TO "OFF" POSITION
   - POWER SHUT OFF VERIFICATION WITH APPROVED PG&E PROCEDURES
   - NOTIFY MOBILITIE UPON COMPLETION OF WORK
   - RESTORE POWER BY PLACING POWER DISCONNECT HANDLE IN THE "ON" POSITION
   - REINSTALL LOCK ON POWER HANDLE
2. EMERGENCY POWER SHUT OFF
   - CALL MOBILITIE **(877) 244-7889**
   - PROVIDE THE FOLLOWING INFORMATION:
     - SITE NUMBER IDENTIFIED ON SITE NUMBERING STICKER
     - YOUR NAME AND REASON FOR POWER SHUTOFF
     - PROVIDE DURATION OF OUTAGE
   - PULL DISCONNECT HANDLE TO "OFF" POSITION
   - POWER SHUT OFF VERIFICATION WITH APPROVED PG&E PROCEDURES
   - NOTIFY MOBILITIE UPON COMPLETION OF WORK
   - RESTORE POWER BY PLACING POWER DISCONNECT HANDLE IN THE "ON" POSITION
   - REINSTALL LOCK ON POWER HANDLE

SHUT DOWN PROCEDURE SIGN

SEE SHEET GN-3, PG&E UTILITY BULLETIN TD-027911B-004, FIGURE 11 - SHUT DOWN PROCEDURE SIGN

POLE MOUNTED SIGNS

SCALE N.T.S. | 3

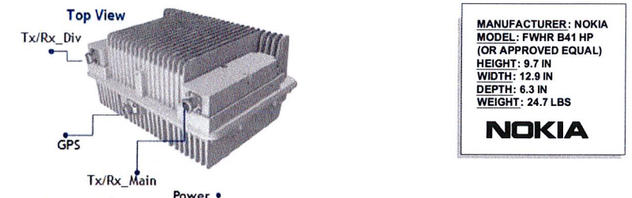

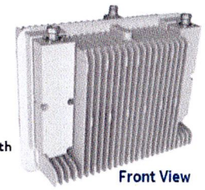

Front View

MANUFACTURER: NOKIA
MODEL: FWHR B41 HP
(OR APPROVED EQUAL)
HEIGHT: 9.7 IN
WIDTH: 12.9 IN
DEPTH: 6.3 IN
WEIGHT: 24.7 LBS

NOKIA

NOKIA RADIO FWHR B41 HP

SCALE N.T.S. | 4

MANUFACTURER:
ELTEK
HEIGHT: 35 IN
WIDTH: 15.5 IN
DEPTH: 9 IN
WEIGHT: 12 LBS

ELTEK A Delta Group Company

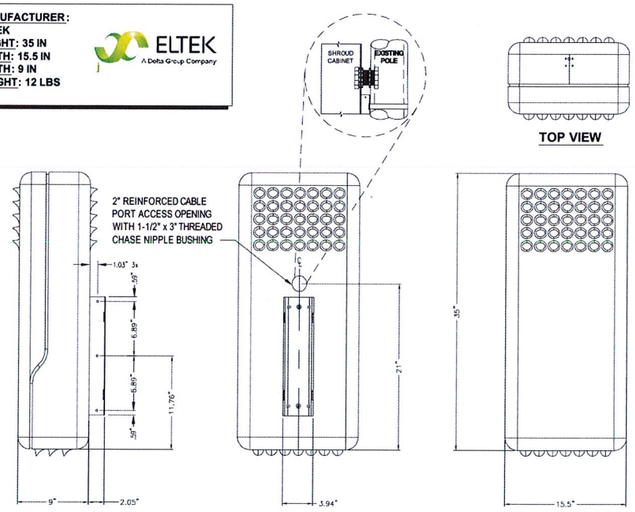

SIDE VIEW BACK VIEW FRONT VIEW



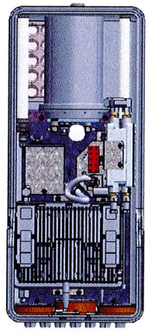

Typical MMS Shroud - Configured

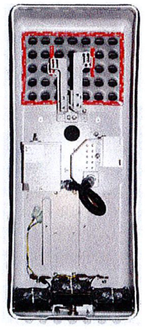

MMS Shroud Enclosure – Internal View

(MMS) SHROUD ENCLOSURE

SCALE N.T.S. | 5

MANUFACTURER: AIRSPAN
MODEL: iR460
(OR APPROVED EQUAL)
HEIGHT: 13 IN
DIAMETER: 7 INØ
DEPTH: 7 IN
WEIGHT: 8.8 LBS

Airspan

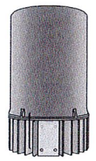

BACK

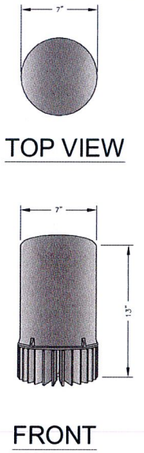

TOP VIEW FRONT

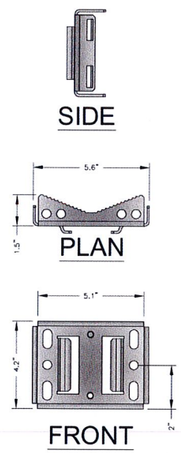

SIDE PLAN FRONT

iR460 UE RELAY/FLUSH MOUNT

SCALE N.T.S. | 6

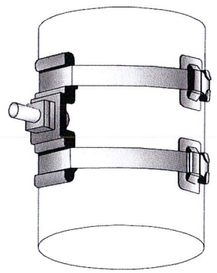

Ear-Lokt Buckle
Use double wrapped band clamp applied with G40269 tool for maximum strength and holding power.

D51089	D51289, D51389
- Use G43099 Band	- Use G43299 Band
- Use G44099 Buckle	- Use G44299 Buckle

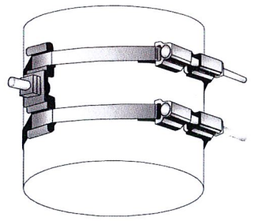

Bolt Clamp - See installation instructions P07387

D51089	D51289, D51389
- Use G43099 Band	- Use G43299 Band
- Use D50089 Bolt Clamp	- Use D50489 Bolt Clamp

STAINLESS STEEL BANDS

SCALE N.T.S. | 7

NOTE:
INSTALL BRACKETS WITH STAINLESS STEEL BANDING.

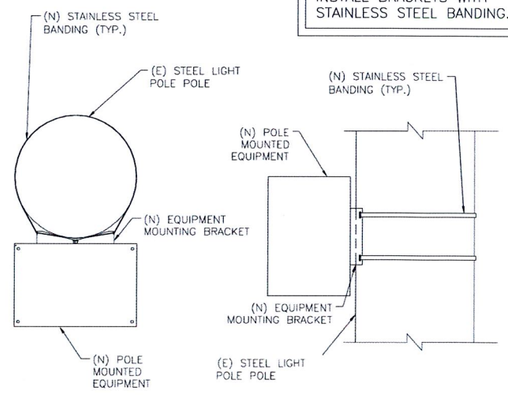

TOP VIEW SIDE VIEW

EQUIPMENT MOUNTING DETAIL

SCALE N.T.S. | 8

mobilitie
intelligent infrastructure

cable engineering services
PRESCOTT COMMUNICATIONS INC.

10640 Sepulveda Blvd. Suite 1, Mission Hills, CA 91345
Phone No.: (818)898-2352 Fax No.: (818)898-9186

PROJECT NO:	9CAB008036
DRAWN BY:	MD
CHECKED BY:	JM

0	06/16/17	90% CONSTRUCTION
1	09/28/17	REVISED PER PG&E STANDARDS
2	04/05/18	REVISED PER NEW PG&E STANDARDS

IT IS A VIOLATION OF THE LAW FOR ANY PERSON, UNLESS THEY ARE ACTING UNDER THE DIRECTION OF A LICENSED PROFESSIONAL ENGINEER, TO ALTER THIS DOCUMENT

9CAB008036
OAKLAND, CA 94612
(E) 30'-0" STEEL LIGHT POLE

SHEET TITLE
EQUIPMENT DETAILS

SHEET NUMBER
EQ-1

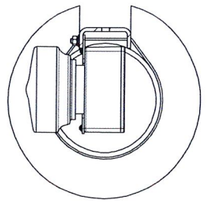

SECTION A-A

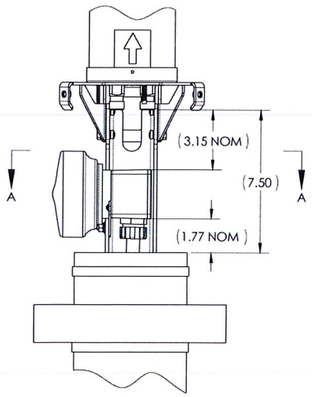

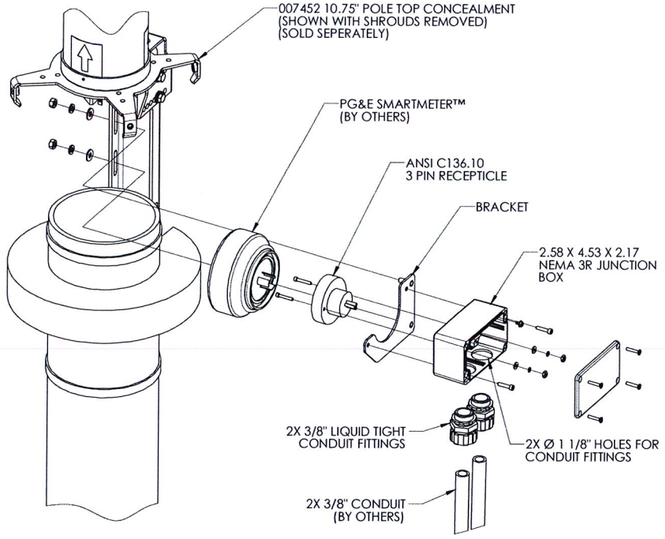

PG&E SMART METER

SCALE N.T.S. | 1

SEE SHEET GN-3, PG&E UTILITY BULLETIN TD-027911B-004, FIGURE 8 - SMART POLE METER

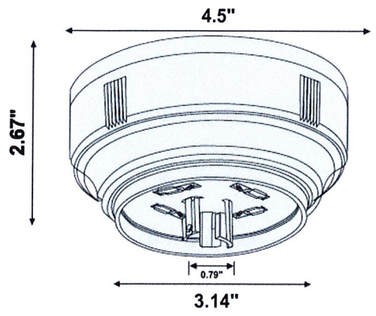

- UNIVERSAL AC INPUT 90V–305V, 50/60HZ
- AMPERE RATING: 15A MAX CONTINUOUS
- ADVANCED METERING INFRASTRUCTURE (AMI) NETWORK COMMUNICATION CARD TO REMOTELY SEND ENERGY USAGE BACK TO THE HEAD–END SYSTEM:
- DATE RATE: 50 TO 300 KBPS
- FREQUENCY RANGE: 902–928 MHZ
- SPREAD SPECTRUM: FREQUENCY HOPPING
- TRANSMITTER OUTPUT: 27–30 DBM (1W)
- RECEIVER SENSITIVITY: –98 DBM FOR 10% PER
- PROTOCOL: IEEE 802.15.4G





PG&E SMART METER

SCALE N.T.S. | 2

MANUFACTURER:
ALLEN-BRADLEY
MODEL: 598-BS533
HEIGHT: 4.53 IN
WIDTH: 2.58 IN
DEPTH: 2.17 IN
WEIGHT: TBD

Rockwell Automation
Allen-Bradley



NEMA 3R JUNCTION BOX

SCALE N.T.S. | 3

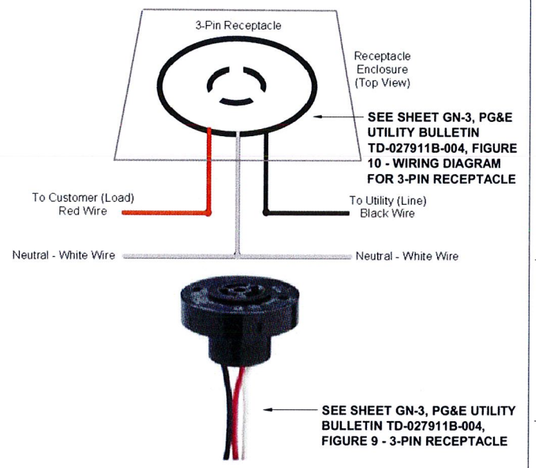

DIMMING RECEPTACLE

SCALE N.T.S. | 4

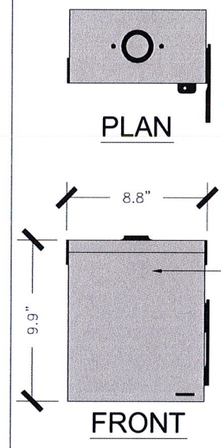

MANUFACTURER:
SIEMENS
MODEL: GNF321R
(OR APPROVED EQUAL)
HEIGHT: 9.9 IN
WIDTH: 8.8 IN
DEPTH: 4.5 IN
WEIGHT: 5 LBS

SIEMENS

NEMA-3R DISCONNECT SWITCH

SCALE N.T.S. | 5



ILSCO PBTD–2–1/0 MULTI TAP
TWO SIDED TERMINAL CONNECTOR
(FOR CONDUCTOR SIZES 14–1/0 AWG)

TERMINAL CONNECTOR

SCALE N.T.S. | 6

NOT USED

SCALE N.T.S. | 7

mobilitie®
intelligent infrastructure

cable engineering services
PRESCOTT COMMUNICATIONS INC.
10640 Sepulveda Blvd. Suite 1, Mission Hills, CA 91345
Phone No.: (818)898-2352 Fax No.: (818)898-9186

PROJECT NO:	9CAB008036
DRAWN BY:	MD
CHECKED BY:	JM

0	06/16/17	90% CONSTRUCTION
1	09/28/17	REVISED PER PG&E STANDARDS
2	04/05/18	REVISED PER NEW PG&E STANDARDS

IT IS A VIOLATION OF THE LAW FOR ANY PERSON, UNLESS THEY ARE ACTING UNDER THE DIRECTION OF A LICENSED PROFESSIONAL ENGINEER, TO ALTER THIS DOCUMENT

9CAB008036
OAKLAND, CA 94612
(E) 30'-0" STEEL LIGHT POLE

SHEET TITLE
EQUIPMENT DETAILS

SHEET NUMBER
EQ-2

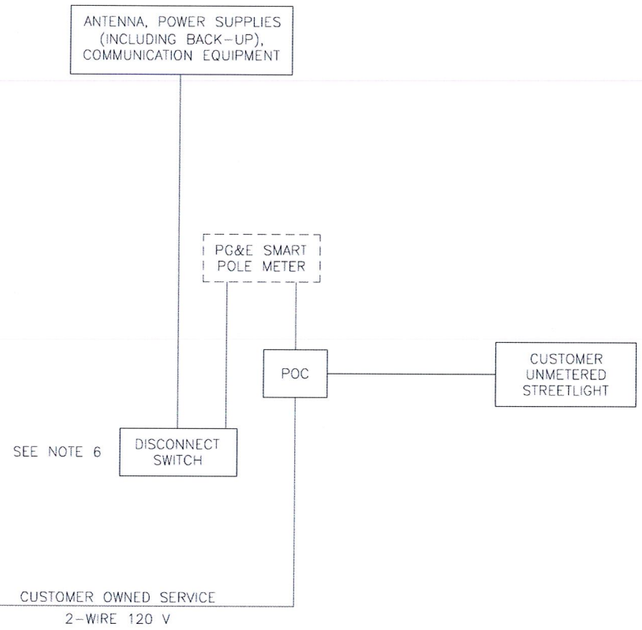

SEE SHEET GN-3, PG&E UTILITY BULLETIN TD-027911B-004, FIGURE 6 - ONE LINE DIAGRAM

ONE-LINE DIAGRAM

SCALE: NOT TO SCALE

1

NOKIA MM RADIO W/ UE RELAY

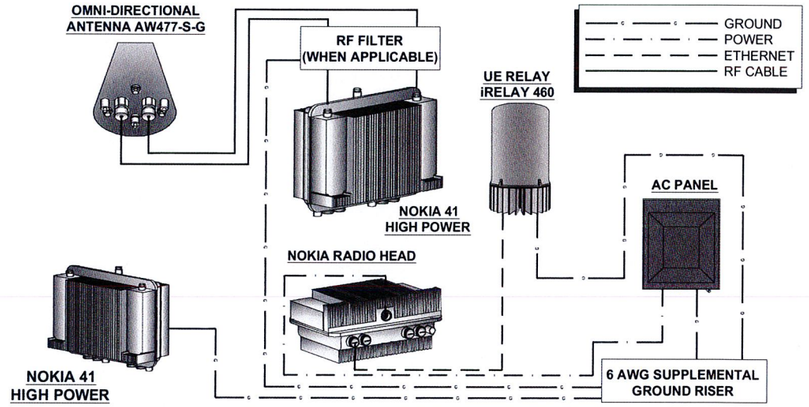

WIRING DIAGRAM

SCALE: NOT TO SCALE

2

NOTES:

1. NOMINAL POWER IS CALCULATED AS 80% OF OEM DOCUMENTED MAXIMUM POWER.
2. CALCULATIONS FOR UE W/ NOKIA DO NOT NEED TO INCLUDE THE POWER FOR THE UE ANTENNA AS IT IS INCLUDED IN THE MAX POWER FIGURE. CALCULATIONS FOR UE W/ AIRSPAN MUST INCLUDE UE AS IT IS NOT INCLUDED
3. KVA IS CALCULATED FROM THE CONSUMPTION VALUE ASSUMING A PF=1. MAXIMUM POWER WAS USED FOR KVA. WHERE MAXIMUM WAS NOTED BY THE OEM THE QUOTED FIGURE WAS USED. WHERE AVERAGE/NOMINAL POWER WAS NOTED BY THE OEM MAXIMUM POWER WAS CALCULATED BY INCREASING AVERAGE/NOMINAL POWER BY A FACTOR OF 50%
4. COST PER KW PROVIDED BY BRAIN KOOYMAN

NOKIA SCENARIO 3 B41 HIGH POWER RADIO AND UE BACKHAUL									
UNIT	SUB DESCRIPTION	MAX POWER	NOMINAL POWER	AVERAGE POWER (W)	CONS. (W)	KVA	KWH/YR	$/YR	$/MO
FWHR	B41 High	360	288	N/A	288	0.36	2522.88	$276.51	$23.04
AIRSPAN UE RELAY	IR460-SPB-ST1-P-0	N/A	N/A	N/A	0	0	0	$-	$-
TOTAL					288	0.36	2522.88	$276.51	$23.04

LOAD CALCULATIONS

SCALE: NOT TO SCALE

3

mobilitie
intelligent infrastructure

CES cable engineering services
PRESCOTT COMMUNICATIONS INC.
10640 Sepulveda Blvd. Suite 1, Mission Hills, CA 91345
Phone No.: (818)898-2352 Fax No.: (818)898-9186

PROJECT NO:	9CAB008036
DRAWN BY:	MD
CHECKED BY:	JM

0	05/16/17	90% CONSTRUCTION
1	09/28/17	REVISED PER PG&E STANDARDS
2	04/05/18	REVISED PER NEW PG&E STANDARDS

IT IS A VIOLATION OF THE LAW FOR ANY PERSON, UNLESS THEY ARE ACTING UNDER THE DIRECTION OF A LICENSED PROFESSIONAL ENGINEER, TO ALTER THIS DOCUMENT

9CAB008036
OAKLAND, CA 94612
(E) 30'-0" STEEL LIGHT POLE

SHEET TITLE
ELECTRICAL DETAILS

SHEET NUMBER
E-1

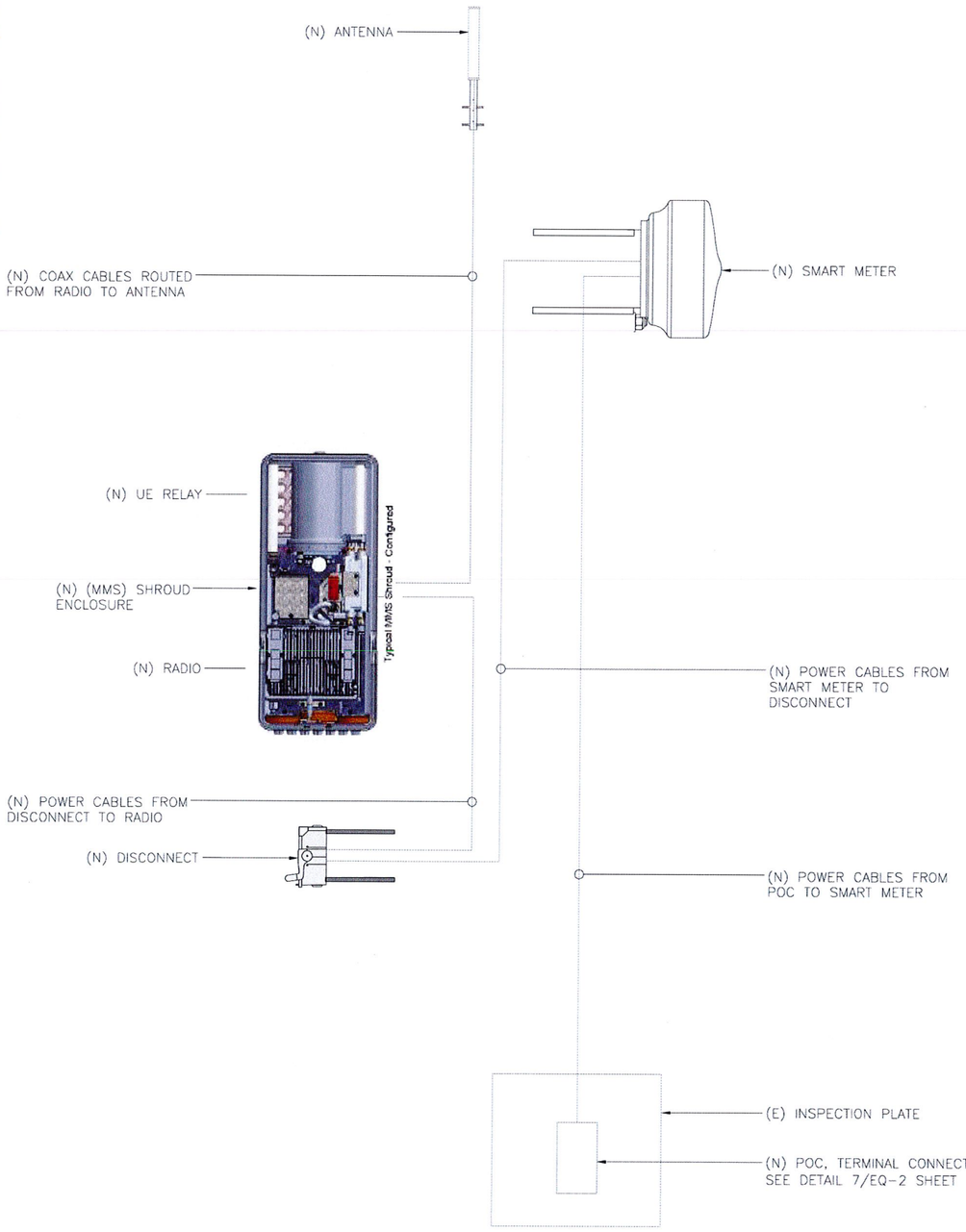

SCHEMATIC POWER FLOW

SCALE: NOT TO SCALE

1

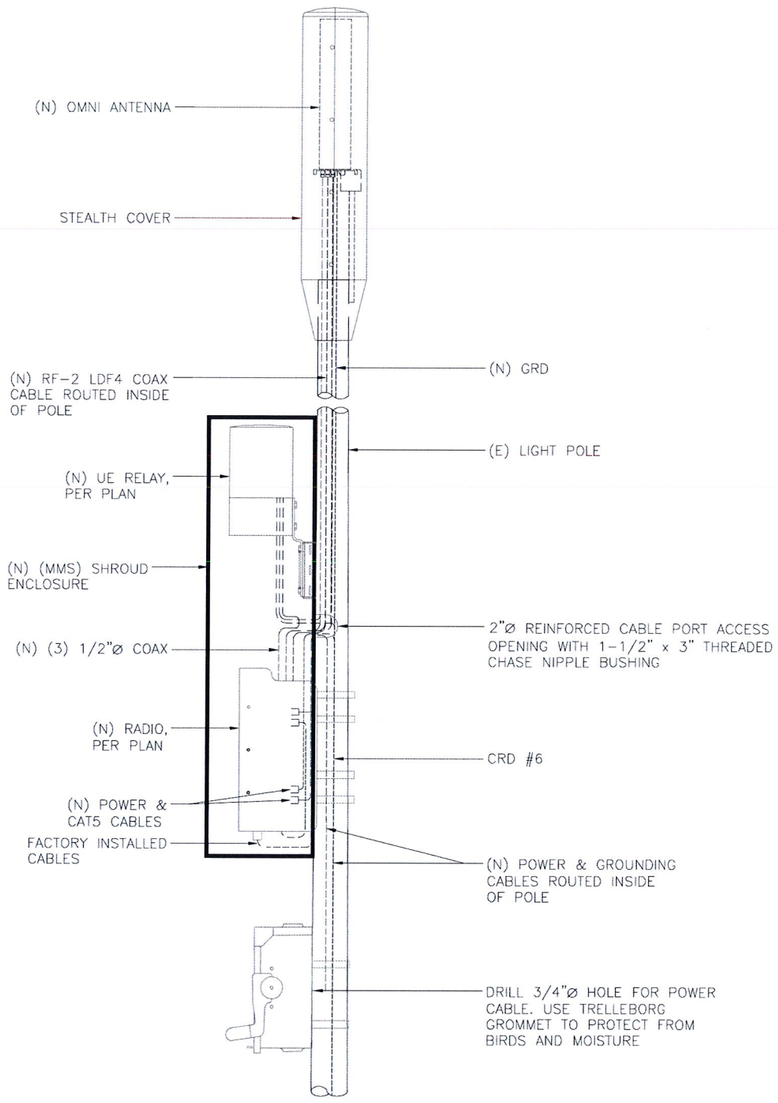

PORT HOLE DETAIL

SCALE: NOT TO SCALE

2

mobilitie®
intelligent infrastructure

CeS cable engineering services
PRESCOTT COMMUNICATIONS INC.
10640 Sepulveda Blvd. Suite 1, Mission Hills, CA 91345
Phone No.: (818)898-2352 Fax No.: (818)898-9186

PROJECT NO:	9CAB008036
DRAWN BY:	MD
CHECKED BY:	JM

0	06/16/17	90% CONSTRUCTION
1	09/28/17	REVISED PER PG&E STANDARDS
2	04/05/18	REVISED PER NEW PG&E STANDARDS

IT IS A VIOLATION OF THE LAW FOR ANY PERSON, UNLESS THEY ARE ACTING UNDER THE DIRECTION OF A LICENSED PROFESSIONAL ENGINEER, TO ALTER THIS DOCUMENT

9CAB008036
OAKLAND, CA 94612
(E) 30'-0" STEEL LIGHT POLE

SHEET TITLE
ELECTRICAL PLAN

SHEET NUMBER
E-2

NOTE:
CONTRACTOR TO SURROUND COMPLETED CONNECTION WITH HEAT-SHRINK TUBING TO ENSURE WEATHER PROOF CONNECTION

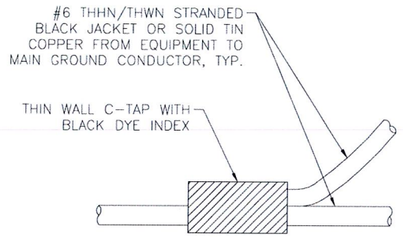

C-TAP DETAIL

SCALE: NOT TO SCALE

1

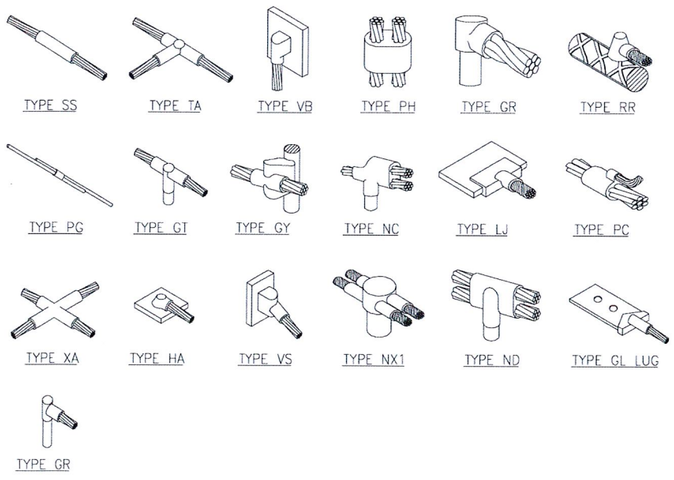

1. GROUNDING BONDS: ALL BONDS ARE TO BE MADE WITH #2 AWG STRANDED COPPER IN GREEN INSULATION. (ATT-TP-76416 7, 6.7)
2. EXTERIOR UNIT BONDS: ALL METALLIC OBJECTS SHALL BE BONDED TO THE GROUND ROD. (ATT-TP-76416 7, 12.6)
3. GROUND ROD: UL LISTED COPPER CLAD STEEL GROUND ROD WITH MINIMUM DIAMETER OF 5/8" AND MINIMUM LENGTH OF 8 FEET. ALL GROUND RODS MAY BE INSTALLED WITH INSPECTION SLEEVES. GROUND RODS SHALL BE DRIVEN TO A MINIMUM DEPTH OF 30" BELOW GRADE OR 6 INCHES BELOW FROST LINE. (ATT-TP-76416 1.4 / 2.2, 3, 10)

WELD CONNECTION DETAILS

SCALE: NOT TO SCALE

2

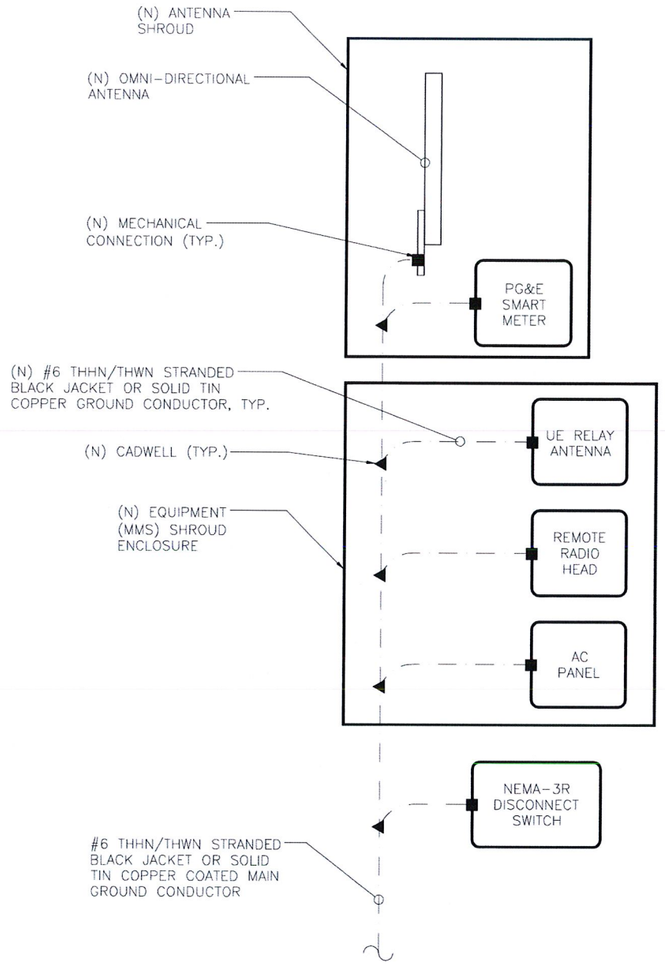

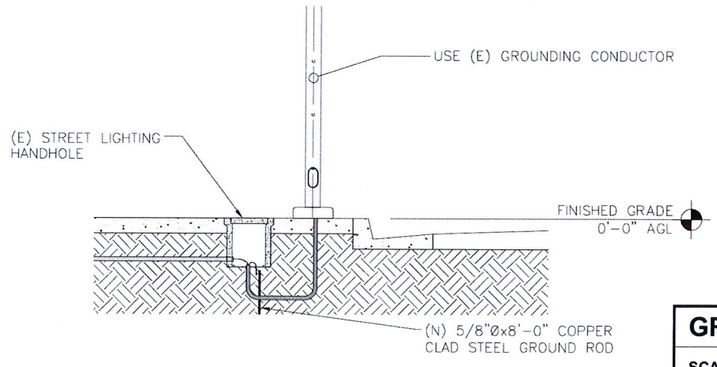

GROUNDING RISER DIAGRAM

SCALE: NOT TO SCALE

3

◀	CADWELL
■	MECHANICAL CONNECTION
⊓⊓	COPPER GROUND BAR (GB)
⊙	⅝"x 8' COPPER CLAD STEEL GROUND ROD
— —	GROUND WIRE
⏚	GROUND

GROUNDING SYMBOLS

NOTES:

1. GROUNDING RISER FOR DIAGRAMMATIC PURPOSES ONLY. SEE ELEVATION DRAWING FOR EQUIPMENT AND ANTENNA LOCATIONS.
2. ALL RGS TO BE GROUNDED AT BOTH ENDS USING GROUNDING BUSHINGS
3. GROUND WIRE BELOW 11' AGL TO BE RUN IN 1/2" SCHEDULE 40 PVC

mobilitie®
intelligent infrastructure

cable engineering services
PRESCOTT COMMUNICATIONS INC.
10640 Sepulveda Blvd. Suite 1, Mission Hills, CA 91345
Phone No.: (818)898-2352 Fax No.: (818)898-9186

PROJECT NO:	9CAB008036
DRAWN BY:	MD
CHECKED BY:	JM

0	06/16/17	90% CONSTRUCTION
1	09/28/17	REVISED PER PG&E STANDARDS
2	04/05/18	REVISED PER NEW PG&E STANDARDS

IT IS A VIOLATION OF THE LAW FOR ANY PERSON, UNLESS THEY ARE ACTING UNDER THE DIRECTION OF A LICENSED PROFESSIONAL ENGINEER, TO ALTER THIS DOCUMENT

9CAB008036
OAKLAND, CA 94612
(E) 30'-0" STEEL LIGHT POLE

SHEET TITLE
GROUNDING DETAILS

SHEET NUMBER
G-1

GENERAL CONSTRUCTION NOTES:

1. ALL WORK SHALL CONFORM TO THE REQUIREMENTS OF THE LOCAL BUILDING CODE, THE LATEST ADOPTED EDITION AND ALL OTHER APPLICABLE CODES AND ORDINANCES.

2. CONTRACTOR SHALL CONSTRUCT SITE IN ACCORDANCE WITH THESE DRAWINGS AND LATEST MOBILITIE CONSTRUCTION STANDARDS. THE SPECIFICATION IS THE RULING DOCUMENT AND ANY DISCREPANCIES BETWEEN THE SPECIFICATION AND THE CONSTRUCTION DRAWINGS SHALL BE BROUGHT TO THE ATTENTION OF THE ARCHITECT/ENGINEER OR MOBILITIE CM PRIOR TO THE COMMENCEMENT OF WORK.

3. CONTRACTOR SHALL VISIT THE JOB SITE AND SHALL FAMILIARIZE THEMSELVES WITH ALL CONDITIONS AFFECTING THE (N) WORK AND SHALL MAKE PROVISIONS AS TO THE COST THEREOF. CONTRACTOR SHALL BE RESPONSIBLE FOR FAMILIARIZING THEMSELVES WITH ALL CONTRACT DOCUMENTS, FIELD CONDITIONS AND DIMENSIONS AND CONFIRMING THAT THE WORK MAY BE ACCOMPLISHED, AS SHOWN, PRIOR TO PROCEEDING WITH CONSTRUCTION. ANY DISCREPANCIES SHALL BE BROUGHT TO THE ATTENTION OF THE ARCHITECT/ENGINEER OR MOBILITIE CM PRIOR TO THE COMMENCEMENT OF WORK. NO COMPENSATION WILL BE AWARDED BASED ON CLAIM OF LACK OF KNOWLEDGE OF FIELD CONDITIONS.

4. IT IS NOT THE INTENT OF THESE PLANS TO SHOW EVERY MINOR DETAIL OF CONSTRUCTION. CONTRACTOR IS REQUIRED TO FURNISH AND INSTALL ANY/ALL ITEMS FOR A COMPLETE AND FULLY FUNCTIONAL SYSTEM SUBJECT ONLY TO OWNER-SUPPLIED ITEMS. CONTRACTOR SHALL PROVIDE ANY/ALL REQUIREMENTS FOR THE EQUIPMENT TO BE PLACED IN PROPER WORKING ORDER.

5. PLANS ARE NOT TO BE SCALED. THESE PLANS ARE INTENDED TO BE A DIAGRAMMATIC OUTLINE ONLY UNLESS OTHERWISE NOTED. THE WORK SHALL INCLUDE FURNISHING MATERIALS, EQUIPMENT AND APPURTENANCES, AND LABOR NECESSARY TO EFFECT ALL INSTALLATIONS AS INDICATED ON THE DRAWINGS. OWNER PROVIDED MATERIALS WILL INCLUDE THOSE ITEMS LISTED IN THE EQUIPMENT DETAILS SECTION OF THESE DRAWING UNLESS OTHERWISE SPECIFIED OR PROVIDED TO THE CONTRACTOR IN WRITING PRIOR TO CONSTRUCTION START.

6. DIMENSIONS SHOWN ARE TO FINISH SURFACES UNLESS OTHERWISE NOTED. SPACING BETWEEN EQUIPMENT IS REQUIRED CLEARANCE. THEREFORE, IT IS CRITICAL TO FIELD VERIFY DIMENSIONS. SHOULD THERE BE ANY QUESTIONS REGARDING THE CONTRACT DOCUMENTS, (E) CONDITIONS AND/OR DESIGN INTENT, THE CONTRACTOR SHALL BE RESPONSIBLE FOR REPORTING ANY DISCREPANCIES TO THE ATTENTION OF THE MOBILITIE CM, IN WRITING, PRIOR TO THE COMMENCEMENT OF WORK.

7. DETAILS PROVIDED ARE FOR THE PURPOSE OF SHOWING DESIGN INTENT. MODIFICATIONS MAY BE REQUIRED TO SUIT JOB DIMENSIONS OR SITE CONDITIONS, AND SUCH MODIFICATIONS SHALL BE INCLUDED AS PART OF THE WORK.

8. CONTRACTOR SHALL PAY FOR APPLICABLE PERMITS, FEES, INSPECTIONS AND TESTING. CONTRACTOR IS TO OBTAIN PERMITS AND APPROVED SUBMITTALS PRIOR TO ORDERING MATERIALS AND THE COMMENCEMENT OF WORK.

9. THE TERM "PROVIDE" USED IN CONSTRUCTION DOCUMENTS AND SPECIFICATIONS, INDICATES THAT THE CONTRACTOR SHALL FURNISH AND INSTALL.

10. CONTRACTOR SHALL RECEIVE CLARIFICATION IN WRITING, AND SHALL RECEIVE IN WRITING AUTHORIZATION TO PROCEED BEFORE STARTING WORK ON ANY ITEMS NOT CLEARLY DEFINED OR IDENTIFIED BY THE CONTRACT DOCUMENTS.

11. CONTRACTOR SHALL SUPERVISE AND DIRECT THE WORK USING ACCEPTED INDUSTRY-STANDARD SKILLS AND ATTENTION. CONTRACTOR SHALL BE SOLELY RESPONSIBLE FOR CONSTRUCTION MEANS, METHODS, TECHNIQUES, SEQUENCES AND PROCEDURES AND FOR COORDINATING ALL PORTIONS OF THE WORK UNDER CONTRACT, UNLESS OTHERWISE NOTED.

12. CONTRACTOR SHALL BE RESPONSIBLE FOR THE SAFETY OF THE WORK AREA, ADJACENT AREAS AND BUILDING OCCUPANTS THAT ARE LIKELY TO BE AFFECTED BY THE WORK UNDER THIS CONTRACT. WORK SHALL CONFORM TO ALL OSHA REQUIREMENTS.

13. CONTRACTOR SHALL COORDINATE THEIR WORK WITH THE MOBILITIE CM AND SCHEDULE THEIR ACTIVITIES AND WORKING HOURS IN ACCORDANCE WITH THE REQUIREMENTS.

14. CONTRACTOR SHALL BE RESPONSIBLE FOR COORDINATING THEIR WORK WITH THE WORK OF OTHERS AS IT MAY RELATE TO RADIO EQUIPMENT, ANTENNAS AND ANY OTHER PORTIONS OF THE WORK.

15. CONTRACTOR SHALL INSTALL ALL EQUIPMENT AND MATERIALS IN ACCORDANCE WITH MANUFACTURERS RECOMMENDATIONS UNLESS SPECIFICALLY OTHERWISE INDICATED OR WHERE LOCAL CODES OR REGULATIONS TAKE PRECEDENCE.

16. CONTRACTOR SHALL MAKE NECESSARY PROVISIONS TO PROTECT (E) SURFACES, EQUIPMENT, IMPROVEMENTS, PIPING ETC. AND IMMEDIATE REPAIR, TO NEW CONDITION, ANY DAMAGE THAT OCCURS DURING CONSTRUCTION AT THE SOLE COST OF THE CONTRACTOR.

17. IN DRILLING HOLES, OR CORING, INTO CONCRETE WHETHER FOR FASTENING OR ANCHORING PURPOSES, OR PENETRATIONS THROUGH THE FLOOR FOR CONDUIT RUNS, PIPE RUNS, ETC., MUST BE CLEARLY UNDERSTOOD THAT REINFORCING STEEL SHALL NOT BE DRILLED INTO, CUT OR DAMAGED UNDER ANY CIRCUMSTANCES (UNLESS NOTED OTHERWISE). LOCATIONS OF REINFORCING STEEL ARE NOT DEFINITELY KNOWN AND THEREFORE MUST BE LOCATED BY THE CONTRACTOR USING APPROPRIATE METHODS AND EQUIPMENT PRIOR TO ANY DRILLING OR CORING OPERATIONS IN (E) CONCRETE.

18. CONTRACTOR SHALL REPAIR, TO NEW CONDITION, ALL (E) WALL SURFACES DAMAGED DURING CONSTRUCTION SUCH THAT THEY MATCH AND BLEND IN WITH ADJACENT SURFACES.

19. CONTRACTOR SHALL SEAL PENETRATIONS THROUGH FIRE RATED ASSEMBLIES OR MATERIALS WITH U.L. LISTED AND FIRE CODE APPROVED MATERIALS AND SYSTEMS THAT MEET OR EXCEED THE RATING OF THE ASSEMBLY IN WHICH THE NEW PENETRATION IS PLACED.

20. CONTRACTOR SHALL KEEP CONTRACT AREA CLEAN, HAZARD FREE, AND DISPOSE OF ALL DIRT, DEBRIS, AND RUBBISH. EQUIPMENT NOT SPECIFIED AS REMAINING ON THE PROPERTY OF THE OWNER SHALL BE REMOVED. LEAVE PREMISES IN CLEAN CONDITION AND FREE FROM PAINT SPOTS, DUST, OR SMUDGES OF ANY NATURE. CONTRACTOR SHALL BE RESPONSIBLE FOR MAINTAINING ALL ITEMS UNTIL COMPLETION OF CONSTRUCTION.

21. MINIMUM BEND RADIUS OF ANTENNA CABLES SHALL BE IN ACCORDANCE WITH CABLE MANUFACTURERS RECOMMENDATIONS.

22. CONTRACTOR SHALL MINIMIZE DISTURBANCE TO (E) SITE DURING CONSTRUCTION. EROSION CONTROL MEASURES, IF REQUIRED DURING CONSTRUCTION SHALL BE IN CONFORMANCE WITH JURISDICTIONAL OR STATE AND LOCAL GUIDELINES FOR EROSION AND SEDIMENT CONTROL AND COORDINATED WITH LOCAL REGULATORY AUTHORITIES. CONTRACTOR SHALL BE RESPONSIBLE FOR MAINTENANCE OF ANY EROSION CONTROL MEASURES, RECORD-KEEPING, MONITORING, AND REPORTING TO THE OWNER AND REGULATORY AUTHORITIES.

23. ALL CONSTRUCTION WORK IS TO ADHERE TO APPLICANT'S INTEGRATED CONSTRUCTION STANDARDS UNLESS STATE OR LOCAL CODE IS MORE STRINGENT.

24. THE INTENT OF THE PLANS AND SPECIFICATIONS IS TO PERFORM THE CONSTRUCTION IN ACCORDANCE PER STATE BUILDING STANDARDS CODE AND STATE CODE OF REGULATIONS. SHOULD ANY CONDITIONS DEVELOP NOT COVERED BY THE APPROVED PLANS AND SPECIFICATIONS WHEREIN THE FINISHED WORK WILL NOT COMPLY PER STATE CODE OF REGULATIONS, A SCOPE OF WORK DETAILING AND SPECIFYING THE REQUIRED WORK SHALL BE SUBMITTED TO AND APPROVED BY THE JURISDICTION BEFORE PROCEEDING WITH THE WORK. A CHANGE ORDER FOR THAT SCOPE SHALL BE SUBMITTED TO THE MOBILITIE CM PRIOR TO PROCEEDING WITH THE WORK.

25. ADEQUATE AND REQUIRED LIABILITY INSURANCE SHALL BE PROVIDED BY THE CONTRACTOR FOR PROTECTION AGAINST PUBLIC LOSS AND ANY/ALL PROPERTY DAMAGE FOR THE DURATION OF WORK.

26. CONTRACTOR SHALL GUARANTEE ANY/ALL MATERIALS AND WORK FREE FROM DEFECTS FOR A PERIOD OF NOT LESS THAN ONE YEAR FROM DATE OF ACCEPTANCE. ANY CORRECTIVE WORK SHALL BE COMPLETED AT THE SOLE COST OF THE CONTRACTOR.

27. CONTRACTOR TO TAP IN AT THE POC AND RUN A NEW, SEPARATE CIRCUIT THROUGH CITY CONDUIT TO GO TO THE POLE.

ELECTRICAL NOTES:

1. ELECTRICAL CONTRACTOR SHALL SUPPLY AND INSTALL ANY/ALL ELECTRICAL WORK INDICATED. ANY/ALL CONSTRUCTION SHALL BE IN ACCORDANCE W/DRAWINGS AND ANY/ALL APPLICABLE SPECIFICATIONS. IF ANY PROBLEMS ARE ENCOUNTERED BY COMPLYING WITH THESE REQUIREMENTS, CONTRACTOR SHALL NOTIFY MOBILITIE CM AS SOON AS POSSIBLE, AFTER THE DISCOVERY OF THE PROBLEMS, AND SHALL NOT PROCEED WITH THAT PORTION OF WORK, UNTIL THE MOBILITIE CM HAS DIRECTED THE CORRECTIVE ACTIONS TO BE TAKEN.

2. ELECTRICAL CONTRACTOR SHALL VISIT THE JOB SITE AND FAMILIARIZE THEMSELVES WITH ANY/ALL CONDITIONS AFFECTING ELECTRICAL AND COMMUNICATION INSTALLATION AND MAKE PROVISIONS AS TO THE COST THEREOF. ALL (E) CONDITIONS OF ELECTRICAL EQUIP., ETC., THAT ARE PART OF THE FINAL SYSTEM, SHALL BE VERIFIED BY THE CONTRACTOR, PRIOR TO THE SUBMITTING OF THEIR BID. FAILURE TO COMPLY WITH THIS PARAGRAPH WILL IN NO WAY RELIEVE CONTRACTOR OF PERFORMING ALL WORK NECESSARY FOR A COMPLETE AND WORKING SYSTEM.

3. ALL WORK SHALL BE PERFORMED IN ACCORDANCE WITH THE LATEST EDITION OF THE NEC, ALL CODES AND ORDINANCES OF THE LOCAL JURISDICTION, AND POWER & TELEPHONE COMPANIES HAVING JURISDICTION AND SHALL INCLUDE BUT ARE NOT BE LIMITED TO:

   A) UL – UNDERWRITERS LABORATORIES
   B) NEC – NATIONAL ELECTRICAL CODE
   C) NEMA – NATIONAL ELECTRICAL MANUFACTURERS ASSOC.
   D) OSHA – OCCUPATIONAL SAFETY AND HEALTH ACT
   E) SBC – STANDARD BUILDING CODE
   F) NFPA – NATIONAL FIRE PROTECTION AGENCY
   G) ANSI – AMERICAN NATIONAL STANDARDS INSTITUTE
   H) IEEE – INSTITUTE OF ELECTRICAL AND ELECTRONICS ENGINEERS
   I) ASTM – AMERICAN SOCIETY FOR TESTING MATERIALS

4. REFER TO SITE PLANS AND ELEVATIONS FOR EXACT LOCATIONS OF ALL EQUIPMENT, AND CONFIRM WITH MOBILITIE CM ANY SIZES AND LOCATIONS WHEN NEEDED.

5. (E) SERVICES: CONTRACTOR SHALL NOT INTERRUPT (E) SERVICES WITHOUT WRITTEN PERMISSION OF THE OWNER.

6. CONTRACTOR SHALL CONFIRM WITH LOCAL UTILITY COMPANY ANY/ALL REQUIREMENTS SUCH AS THE: LUG SIZE RESTRICTIONS, CONDUIT ENTRY, SIZE OF TRANSFORMERS, SCHEDULED DOWNTIME FOR THE OWNERS' CONFIRMATION, ETC... ANY/ALL CONFLICTS SHALL BE BROUGHT TO THE ATTENTION OF THE MOBILITIE CM, PRIOR TO BEGINNING ANY WORK.

7. MINIMUM WIRE SIZE SHALL BE #12 AWG, NOT INCLUDING CONTROL WIRING, UNLESS NOTED OTHERWISE. ALL CONDUCTORS SHALL BE COPPER WITH THWN INSULATION, UNLESS OTHERWISE NOTED.

8. OUTLET BOXES SHALL BE PRESSED STEEL IN DRY LOCATIONS, CAST ALLOY WITH THREADED HUBS IN WET/DAMP LOCATIONS AND SPECIAL ENCLOSURES FOR OTHER CLASSIFIED AREAS.

9. IT IS NOT THE INTENT OF THESE PLANS TO SHOW EVERY MINOR DETAIL OF THE CONSTRUCTION. CONTRACTOR IS EXPECTED TO FURNISH AND INSTALL ALL ITEMS FOR A COMPLETE ELECTRICAL SYSTEM AND PROVIDE ALL REQUIREMENTS FOR THE EQUIPMENT TO BE PLACED IN PROPER WORKING ORDER.

10. ELECTRICAL SYSTEM SHALL BE AS COMPLETELY AND EFFECTIVELY GROUNDED, AS REQUIRED BY SPECIFICATIONS, SET FORTH BY APPLICANT.

11. ALL WORK SHALL BE PERFORMED BY A LICENSED ELECTRICAL CONTRACTOR IN A FIRST CLASS, WORKMANLIKE MANNER. THE COMPLETED SYSTEM SHALL BE FULLY FUNCTIONAL AND SHALL BE APPROVED BY THE MOBILITIE CM AND LOCAL JURISDICTION. ANY DEFICIENCIES SHALL BE CORRECTED BY AN ELECTRICAL CONTRACTOR AT THE SOLE COST OF THE CONTRACTOR.

12. ALL WORK SHALL BE COORDINATED WITH OTHER TRADES TO AVOID INTERFERENCE WITH THE PROGRESS OF CONSTRUCTION.

mobilitie®
intelligent infrastructure

cable engineering services
PRESCOTT COMMUNICATIONS INC.
10640 Sepulveda Blvd. Suite 1, Mission Hills, CA 91345
Phone No.: (818)898-2352 Fax No.: (818)898-9186

PROJECT NO:	9CAB008036
DRAWN BY:	MD
CHECKED BY:	JM

0	06/16/17	90% CONSTRUCTION
1	09/28/17	REVISED PER PG&E STANDARDS
2	04/05/18	REVISED PER NEW PG&E STANDARDS

IT IS A VIOLATION OF THE LAW FOR ANY PERSON, UNLESS THEY ARE ACTING UNDER THE DIRECTION OF A LICENSED PROFESSIONAL ENGINEER, TO ALTER THIS DOCUMENT

9CAB008036
OAKLAND, CA 94612
(E) 30'-0" STEEL LIGHT POLE

SHEET TITLE
GENERAL NOTES

SHEET NUMBER
GN-1

ELECTRICAL NOTES CONT'D

13. THE CORRECTION OF ANY DEFECTS SHALL BE COMPLETED BY THE CONTRACTOR WITHOUT ANY ADDITIONAL CHARGE AND SHALL INCLUDE THE REPLACEMENT OR THE REPAIR OF ANY OTHER PHASE OF THE INSTALLATION, WHICH MAY HAVE BEEN DAMAGED THEREIN.

14. CONTRACTOR SHALL PROVIDE AND INSTALL CONDUIT, CONDUCTORS, PULL WIRES, BOXES, COVER PLATES AND DEVICES FOR ALL OUTLETS AS INDICATED.

15. DITCHING AND BACK FILL: CONTRACTOR SHALL PROVIDE FOR ALL UNDERGROUND INSTALLED CONDUIT AND/OR CABLES INCLUDING EXCAVATION AND BACKFILLING AND COMPACTION. REFER TO NOTES AND REQUIREMENTS 'EXCAVATION, AND BACKFILLING.

16. MATERIALS, PRODUCTS AND EQUIPMENT, INCLUDING ALL COMPONENTS THEREOF, SHALL BE NEW AND SHALL APPEAR ON THE LIST OF U.L. APPROVED ITEMS AND SHALL MEET OR EXCEED THE REQUIREMENTS OF THE NEC, NEMA AND IECE.

17. CONTRACTOR SHALL SUBMIT SHOP DRAWINGS OR MANUFACTURER'S CATALOG INFORMATION OF ANY/ALL EQUIPMENT AND ALL OTHER ELECTRICAL ITEMS FOR APPROVAL BY THE MOBILITIE CM PRIOR TO INSTALLATION.

18. ANY CUTTING OR PATCHING DEEMED NECESSARY FOR ELECTRICAL WORK IS THE ELECTRICAL CONTRACTORS RESPONSIBILITY AND SHALL BE INCLUDED IN THE COST FOR WORK AND PERFORMED TO THE SATISFACTION OF THE MOBILITIE CM UPON FINAL ACCEPTANCE.

19. THE ELECTRICAL CONTRACTOR SHALL LABEL ALL PANELS WITH ONLY TYPEWRITTEN DIRECTORIES. ALL ELECTRICAL WIRING SHALL BE THE RESPONSIBILITY OF THE ELECTRICAL CONTRACTOR.

20. DISCONNECT SWITCHES SHALL BE UL-RATED, H.P. RATED HEAVY-DUTY, QUICK-MAKE AND QUICK-BREAK ENCLOSURES, AS REQUIRED BY EXPOSURE TYPE.

21. ALL CONNECTIONS SHALL BE MADE WITH A PROTECTIVE COATING OF AN ANTI-OXIDE COMPOUND KNOWN AS "NO-OXIDE A" BY DEARBORNE CHEMICAL CO. COAT ALL WIRE SURFACES BEFORE CONNECTING. EXPOSED COPPER SURFACES, INCLUDING GROUND BARS, SHALL BE TREATED – NO SUBSTITUTIONS.

22. RACEWAYS: CONDUIT SHALL BE SCHEDULE 80 PVC MEETING OR EXCEEDING NEMA TC2 – 1990. CONTRACTOR SHALL PLUG AND CAP EACH END OF SPARE AND EMPTY CONDUITS AND PROVIDE TWO SEPARATE PULL STRINGS – 200 LBS TEST POLYETHYLENE CORD. ALL CONDUIT BENDS SHALL BE A MINIMUM OF 2 FT. RADIUS. RGS CONDUITS WHEN SPECIFIED, SHALL MEET UL-6 FOR GALVANIZED STEEL. ALL FITTINGS SHALL BE SUITABLE FOR USE WITH THREADED RIGID CONDUIT. COAT ALL THREADS WITH 'BRITE ZINC' OR 'COLD GALV'.

23. SUPPORT OF ALL ELECTRICAL WORK SHALL BE AS REQUIRED BY NEC.

24. CONDUCTORS: CONTRACTOR SHALL USE 98% CONDUCTIVITY COPPER WITH TYPE THWN INSULATION, UNLESS OTHERWISE NOTED, 600 VOLT, COLOR CODED. USE SOLID CONDUCTORS FOR WIRE UP TO AND INCLUDING NO. 8 AWG. USE STRANDED CONDUCTORS FOR WIRE ABOVE NO. 8 AWG.

25. CONNECTORS FOR POWER CONDUCTORS: CONTRACTOR SHALL USE PRESSURE TYPE INSULATED TWIST-ON CONNECTORS FOR NO. 10 AWG AND SMALLER. USE SOLDERLESS MECHANICAL TERMINAL LUGS FOR NO. 8 AWG AND LARGER.

26. SERVICE: AS SPECIFIED ON THE DRAWINGS. OWNER OR OWNER'S AGENT WILL APPLY FOR POWER. ALL PROVISIONS FOR TEMPORARY POWER WILL BE OBTAINED BY THE CONTRACTOR.

27. TELEPHONE OR FIBER SERVICE: CONTRACTOR SHALL PROVIDE EMPTY CONDUITS WITH PULL STRINGS AS INDICATED ON DRAWINGS.

28. ELECTRICAL AND TELCO/FIBER RACEWAYS TO BE BURIED A MINIMUM DEPTH OF 30", UNLESS OTHERWISE NOTED.

29. CONTRACTOR SHALL PLACE 6" WIDE DETECTABLE WARNING TAPE AT A DEPTH OF 6" BELOW GROUND AND DIRECTLY ABOVE ELECTRICAL AND TELCO SERVICE CONDUITS. CAUTIONS TAPE TO READ "CAUTION BURIED ELECTRIC" OR "BURIED TELECOMM".

30. ALL BOLTS SHALL BE 3-16 STAINLESS STEEL

31. THE ELECTRICAL CONTRACTOR SHALL LABEL ALL PANELS WITH ONLY TYPEWRITTEN DIRECTORIES. ALL ELECTRICAL WIRING SHALL BE THE RESPONSIBILITY OF THE ELECTRICAL CONTRACTOR.

GROUNDING NOTES:

1. ALL HARDWARE SHALL BE 3-16 STAINLESS STEEL, INCLUDING LOCK WASHERS. COAT ALL SURFACES WITH AN ANTI-OXIDANT COMPOUND, AS SPECIFIED, BEFORE MATING. ALL HARDWARE SHALL BE STAINLESS STEEL 3/8 INCH DIAMETER OR LARGER.

2. FOR GROUND BOND TO STEEL ONLY: INSERT A CADMIUM FLAT WASHER BETWEEN LUG AND STEEL, COAT ALL SURFACES WITH AN ANTI-OXIDANT COMPOUND BEFORE MATING.

3. ALL STEEL CONDUIT SHALL BE BONDED AT BOTH ENDS WITH GROUNDING BUSHING.

4. ALL ELECTRICAL AND GROUNDING AT THE POLE SITE SHALL COMPLY WITH THE NATIONAL ELECTRICAL CODE (NEC), NATIONAL FIRE PROTECTION ASSOCIATION (NFPA) 780 (LATEST EDITION), AND MANUFACTURER.

5. ALL DETAILS ARE SHOWN IN GENERAL TERMS. ACTUAL GROUNDING INSTALLATION AND CONSTRUCTION MAY VARY DUE TO SITE SPECIFIC CONDITIONS.

6. GROUND ALL ANTENNA BASES, FRAMES, CABLE RUNS, AND OTHER METALLIC COMPONENTS USING #6 GROUND WIRES. FOLLOW ANTENNA AND BTS MANUFACTURER'S PRACTICES FOR GROUNDING REQUIREMENTS.

7. ALL GROUND CONNECTIONS SHALL BE #6 AWG, UNLESS OTHERWISE NOTED. ALL WIRES SHALL BE COPPER WITH THHN, UNLESS OTHERWISE NOTED. ALL GROUND WIRE SHALL BE SOLID TIN COATED OR STRANDED GREEN INSULATED WIRE.

8. CONTRACTOR TO VERIFY AND TEST GROUND TO SOURCE, 10 OHMS MAXIMUM. PROVIDE SUPPLEMENT GROUNDING RODS AS REQUIRED TO ACHIEVE SPECIFIED OHMS READING. GROUNDING AND OTHER OPTIONAL TESTING WILL BE WITNESSED BY THE MOBILITIE CM.

9. NOTIFY ARCHITECT/ENGINEER IF THERE ARE ANY DIFFICULTIES INSTALLING GROUNDING SYSTEM DUE TO SITE SOIL CONDITIONS.

10. ALL HORIZONTALLY RUN GROUNDING CONDUCTORS SHALL BE INSTALLED A MINIMUM OF 30" BELOW GRADE/ 6" BELOW FROST-LINE IN TRENCH, UNLESS OTHERWISE NOTED.BACK FILL SHALL BE COMPACTED AS REQUIRED BY ARCHITECT/ENGINEER.

11. ALL GROUND CONDUCTORS SHALL BE RUN AS STRAIGHT AND SHORT AS POSSIBLE, WITH A MINIMUM 12" BENDING RADIUS NOT LESS THAN 90 DEGREES.

12. ACCEPTABLE CONNECTIONS FOR GROUNDING SYSTEM SHALL BE:

A. BURNDY, HY-GRADE U.L. LISTED CONNECTORS FOR OUTDOOR USE OR AS APPROVED BY APPLICANT PROJECT MANAGER.

B. CADWELD, EXOTHERMIC WELDS (WELDED CONNECTIONS).

C. ONE (1) HOLE TINNED COPPER COMPRESSION (LONG BARREL) FITTINGS.

13. ALL CRIMPED CONNECTIONS SHALL HAVE EMBOSSED MANUFACTURER'S DIEMARK VISIBLE AT THE CRIMP (RESULTING FROM USE OF PROPER CRIMPING DEVICES) AND WEATHER-PROOFED WITH HEAT SHRINK.

14. ALL CONNECTION HARDWARE SHALL BE TYPE 3-16 STAINLESS STEEL (NOT ATTRACTED TO MAGNETS).

15. ELECTRICAL SERVICE EQUIPMENT GROUNDING SHALL COMPLY WITH NEC, ARTICLE 250-82 AND SHALL BOND ALL (E) AND NEW GROUNDING ELECTRODES. NEW GROUNDING ELECTRODE SHALL INCLUDE BUT NOT LIMITED TO GROUND RODS.

TESTING AND EQUIPMENT TURN UP REQUIREMENTS:

1. RF CABLE, DATA CABLE, RADIO EQUIPMENT AND BACK HAUL EQUIPMENT TESTING WILL COMPLY WITH CURRENT INDUSTRY STANDARDS AND OR THOSE STANDARDS OF THE EQUIPMENT MANUFACTURER OR PROVIDED TO THE CONTRACTOR PRIOR TO TESTING.

2. CONTRACTOR WILL USE THE APPROPRIATE CALIBRATED TESTING EQUIPMENT IN THE TESTING OF RF CABLE, DATA CABLE, RADIO EQUIPMENT AND BACK HAUL EQUIPMENT THAT MEET INDUSTRY STANDARDS OF THE MANUFACTURER OR THOSE STANDARDS PROVIDED TO THE CONTRACTOR PRIOR TO TESTING.

3. CONTRACTOR TO VERIFY AND RECORD ALL TEST RESULTS AND PROVIDE THESE RESULTS WITHIN THE FINAL CLOSE OUT PACKAGE.

4. ALL PERSONNEL INVOLVED IN THE TESTING OF RF CABLE, DATA CABLE, RADIO EQUIPMENT AND BACK HAUL EQUIPMENT WILL BE REQUIRED TO HAVE BEEN TRAINED AND OR CERTIFIED IN THE PROPER TESTING OF RF CABLE, DATA CABLE, RADIO EQUIPMENT AND BACK HAUL EQUIPMENT.

5. ALL TEST RESULTS SHALL BE TIME STAMPED, RECORDED AND PRESENTED PRIOR TO ENERGIZING AND TURN UP OF ANY EQUIPMENT.

6. GPS EQUIPMENT IS NOT TO BE TESTED OR ATTACHED TO ANY CABLING DURING TESTING, DOING SO WILL DAMAGE THE GPS UNIT.

7. PRIOR TO TESTING IF THE CONTRACTOR HAS ANY QUESTIONS ABOUT THE TESTING PROCEDURES THEY ARE TO CALL AND OBTAIN ASSISTANCE FROM A QUALIFIED DESIGNATED TESTING REPRESENTATIVE.

8. EQUIPMENT IS NOT TO BE ENERGIZED UNTIL ALL TESTING HAS BEEN COMPLETED, APPROVED AND THE APPROPRIATE AUTHORITY HAS BEEN NOTIFIED AND GIVES APPROVAL TO ENERGIZE THE EQUIPMENT.

SITE WORK NOTES:

1. DO NOT EXCAVATE OR DISTURB BEYOND THE PROPERTY LINES OR LEASE LINES, UNLESS OTHERWISE NOTED.

2. SIZE, LOCATION AND TYPE OF ANY UNDERGROUND UTILITIES OR IMPROVEMENTS SHALL BE ACCURATELY NOTED AND PLACED ON AS-BUILT DRAWINGS BY GENERAL CONTRACTOR AND ISSUED TO ARCHITECT/ENGINEER AT COMPLETION OF PROJECT.

3. ALL (E) UTILITIES, FACILITIES, CONDITIONS AND THEIR DIMENSIONS SHOWN ON PLANS HAVE. BEEN PLOTTED FROM AVAILABLE RECORDS. THE ENGINEER AND OWNER ASSUME NO RESPONSIBILITY WHATSOEVER AS TO THE SUFFICIENCY OR ACCURACY OF THE INFORMATION SHOWN ON THE PLANS OR THE MANNER OF THEIR REMOVAL OR ADJUSTMENT. CONTRACTOR SHALL BE RESPONSIBLE FOR DETERMINING EXACT LOCATION OF ALL (E) UTILITIES AND FACILITIES PRIOR TO START OF CONSTRUCTION. CONTRACTOR SHALL ALSO OBTAIN FROM EACH UTILITY COMPANY DETAILED INFORMATION RELATIVE TO WORKING SCHEDULES AND METHODS OF REMOVING OR ADJUSTING (E) UTILITIES.

4. CONTRACTOR SHALL VERIFY ALL (E) UTILITIES BOTH HORIZONTALLY AND VERTICALLY PRIOR TO START OF CONSTRUCTION. ANY DISCREPANCIES OR DOUBTS AS TO THE INTERPRETATION OF PLANS SHALL BE IMMEDIATELY REPORTED TO THE ARCHITECT/ENGINEER OR MOBILITIE CM FOR RESOLUTION AND INSTRUCTION, AND NO FURTHER WORK SHALL BE PERFORMED UNTIL THE DISCREPANCY IS CHECKED AND CORRECTED BY THE ARCHITECT/ENGINEER. FAILURE TO SECURE SUCH INSTRUCTION MEANS CONTRACTOR WILL HAVE WORKED AT THEIR OWN RISK AND EXPENSE. CONTRACTOR SHALL CALL LOCAL UTILITY LOCATE HOT LINE, SUCH AS 811, FOR UTILITY LOCATIONS A MINIMUM OF 48 HOURS PRIOR TO START OF CONSTRUCTION.

5. ALL NEW AND (E) UTILITY STRUCTURES ON SITE AND IN AREAS TO BE DISTURBED BY CONSTRUCTION SHALL BE ADJUSTED TO FINISH ELEVATIONS PRIOR TO FINAL INSPECTION OF WORK. ANY COST RELATED TO ADJUSTING (E) STRUCTURES SHALL BE BORNE SOLELY BY THE CONTRACTOR.

6. GRADING OF THE SITE WORK AREA IS TO BE SMOOTH AND CONTINUOUS IN SLOPE AND IS TO FEATHER INTO (E) GRADES AT THE GRADING LIMITS.

7. ALL TEMPORARY EXCAVATIONS FOR THE INSTALLATION OF FOUNDATIONS, UTILITIES, ETC., SHALL BE PROPERLY LAID BACK OR BRACED IN ACCORDANCE WITH CORRECT OCCUPATIONAL SAFETY AND HEALTH ADMINISTRATION (OSHA) REQUIREMENTS.

8. STRUCTURAL FILLS SUPPORTING PAVEMENTS SHALL BE COMPACTED TO 95% OF MAXIMUM STANDARD PROCTOR DRY DENSITY, UNLESS OTHERWISE NOTED.

9. NEW GRADES NOT IN BUILDING AND DRIVEWAY IMPROVEMENT AREA TO BE ACHIEVED BY FILLING WITH APPROVED CLEAN FILL AND COMPACTED TO 95% OF STANDARD PROCTOR DENSITY.

10. ALL FILL SHALL BE PLACED IN UNIFORM LIFTS. THE LIFTS THICKNESS SHOULD NOT EXCEED THAT WHICH CAN BE PROPERLY COMPACTED THROUGHOUT ITS ENTIRE DEPTH WITH THE EQUIPMENT AVAILABLE.

mobilitie
intelligent infrastructure

CES cable engineering services
PRESCOTT COMMUNICATIONS INC.
10640 Sepulveda Blvd. Suite 1, Mission Hills, CA 91345
Phone No.: (818)898-2352 Fax No.: (818)898-9186

PROJECT NO:	9CAB008036
DRAWN BY:	MD
CHECKED BY:	JM

0	06/16/17	90% CONSTRUCTION
1	09/28/17	REVISED PER PG&E STANDARDS
2	04/05/18	REVISED PER NEW PG&E STANDARDS

IT IS A VIOLATION OF THE LAW FOR ANY PERSON, UNLESS THEY ARE ACTING UNDER THE DIRECTION OF A LICENSED PROFESSIONAL ENGINEER, TO ALTER THIS DOCUMENT

9CAB008036
OAKLAND, CA 94612
(E) 30'-0" STEEL LIGHT POLE

SHEET TITLE
GENERAL NOTES

SHEET NUMBER
GN-2

SITE WORK NOTES CONT'D

11. ANY FILLS PLACED ON (E) SLOPES THAT ARE STEEPER THAN 10 HORIZONTAL TO 1 VERTICAL SHALL BE PROPERLY BENCHED INTO THE (E) SLOPE AS DIRECTED BY A GEOTECHNICAL ENGINEER.
12. CONTRACTOR SHALL CLEAN ENTIRE SITE AFTER CONSTRUCTION SUCH THAT NO DEBRIS, PAPER, TRASH, WEEDS, BRUSH, EXCESS FILL, OR ANY OTHER DEPOSITS WILL REMAIN. ALL MATERIALS COLLECTED DURING CLEANING OPERATIONS SHALL BE DISPOSED OF OFF-SITE BY THE GENERAL CONTRACTOR.
13. ALL TREES AND SHRUBS WHICH ARE NOT IN DIRECT CONFLICT WITH THE IMPROVEMENTS SHALL BE PROTECTED BY THE GENERAL CONTRACTOR.
14. ALL SITE WORK SHALL BE CAREFULLY COORDINATED BY GENERAL CONTRACTOR WITH LOCAL UTILITY COMPANY, TELEPHONE COMPANY, AND ANY OTHER UTILITY COMPANIES HAVING JURISDICTION OVER THIS LOCATION.

ENVIRONMENTAL NOTES:

1. ALL WORK PERFORMED SHALL BE DONE IN ACCORDANCE WITH ISSUED PERMITS. THE CONTRACTOR SHALL BE RESPONSIBLE FOR PAYMENT OF FINES AND PROPER CLEAN UP FOR AREAS IN VIOLATION.
2. CONTRACTOR SHALL BE RESPONSIBLE FOR CONSTRUCTION AND MAINTENANCE OF EROSION AND SEDIMENTATION CONTROLS DURING CONSTRUCTION FOR PROTECTION OF ADJACENT PROPERTIES, ROADWAYS AND WATERWAYS. ALL EROSION AND SEDIMENTATION CONTROLS SHALL BE MAINTAINED IN PLACE THROUGH FINAL JURISDICTIONAL INSPECTION & RELEASE OF SITE.
3. CONTRACTOR SHALL INSTALL/CONSTRUCT ALL NECESSARY SEDIMENT/SILT CONTROL FENCING AND PROTECTIVE MEASURES AS REQUIRED BY THE LOCAL JURISDICTION WITHIN THE LIMITS OF SITE DISTURBANCE PRIOR TO CONSTRUCTION.
4. NO SEDIMENT SHALL BE ALLOWED TO EXIT THE PROPERTY. THE CONTRACTOR IS RESPONSIBLE FOR TAKING ADEQUATE MEASURES FOR CONTROLLING EROSION. ADDITIONAL SEDIMENT CONTROL FENCING MAY BE REQUIRED IN ANY AREAS SUBJECT TO EROSION.
5. THE CONTRACTOR IS RESPONSIBLE FOR MAINTAINING POSITIVE DRAINAGE ON THE SITE AT ALL TIMES WITH SILT AND EROSION CONTROL MEASURES MAINTAINED ON THE DOWNSTREAM SIDE OF SITE DRAINAGE. ANY DAMAGE TO ADJACENT PROPERTY AS A RESULT OF EROSION WILL BE CORRECTED AT THE CONTRACTORS EXPENSE.
6. CONTRACTOR SHALL BE RESPONSIBLE FOR DAILY INSPECTIONS AND ANY REPAIRS OF ALL SEDIMENT CONTROL MEASURES INCLUDING SEDIMENT REMOVAL AS NECESSARY.
7. CLEARING OF VEGETATION AND TREE REMOVAL SHALL BE ONLY AS PERMITTED AND BE HELD TO A MINIMUM. ONLY TREES NECESSARY FOR CONSTRUCTION OF THE FACILITIES SHALL BE REMOVED.
8. SEEDING AND MULCHING AND/OR SODDING OF THE SITE WILL BE ACCOMPLISHED AS SOON AS POSSIBLE AFTER COMPLETION OF THE PROJECT FACILITIES AFFECTING LAND DISTURBANCE.
9. CONTRACTOR SHALL PROVIDE ALL EROSION AND SEDIMENTATION CONTROL MEASURES AS REQUIRED BY LOCAL, COUNTY AND STATE CODES AND ORDINANCES TO PROTECT EMBANKMENTS FROM SOIL LOSS AND TO PREVENT ACCUMULATION OF SOIL AND SILT IN STREAMS AND DRAINAGE PATHS LEAVING THE CONSTRUCTION AREA. THIS MAY INCLUDE, BUT IS NOT LIMITED TO SUCH MEASURES AS SILT FENCES, STRAW BALE SEDIMENT BARRIERS, AND CHECK DAMS.
10. RIP RAP OF SIZES INDICATED SHALL CONSIST OF CLEAN, HARD, SOUND, DURABLE, UNIFORM IN QUALITY STONE FREE OF ANY DETRIMENTAL QUANTITY OF SOFT, FRIABLE, THIN, ELONGATED OR LAMINATED PIECES, DISINTEGRATED MATERIAL, ORGANIC MATTER, OIL, ALKALI, OR OTHER DELETERIOUS SUBSTANCES.
11. GC TO PLACE FILTER MATERIAL AT ALL CATCH BASINS ADJACENT TO CONSTRUCTION SITE TO PREVENT SOLID WASTE CONTAMINATION FROM ENTERING SEWER SYSTEM

FOUNDATION, EXCAVATION AND BACKFILL NOTES:

1. ALL FINAL GRADED SLOPES SHALL BE A MAXIMUM OF 3 HORIZONTAL TO 1 VERTICAL, UNLESS OTHERWISE NOTED.
2. BACKFILL OF POLE SHALL BE PERFORMED IN ONE OF THREE OPTIONS:
   A. PREFERRED: RAINBOW INDUSTRIES POLE SETTING FOAM SHALL BE INSTALLED PER MANUFACTURER SPECS. FOAM SHALL ALWAYS BE USED FOR POOR SOILS.
   B. SECONDARY: CONCRETE (REQUIRES MOBILITIE CM WRITTEN APPROVAL) ALLOWABLE SOIL PRESSURE = 2000 PSF (ASSUMED).
   NON-NATIVE SOILS SHALL BE REMOVE FROM BORE AREA AND SHALL NOT BE REUSED FOR BACKFILL
3. ALL EXCAVATIONS PREPARED FOR PLACEMENT OF CONCRETE SHALL BE OF UNDISTURBED SOILS, SUBSTANTIALLY HORIZONTAL AND FREE FROM ANY LOOSE, UNSUITABLE MATERIAL OR FROZEN SOILS, AND WITHOUT THE PRESENCE OF POUNDING WATER. DEWATERING FOR EXCESS GROUND WATER SHALL BE PROVIDED WHEN REQUIRED. COMPACTION OF SOILS UNDER CONCRETE PAD FOUNDATIONS SHALL NOT BE LESS THAN 95% OF THE MODIFIED PROCTOR MAXIMUM DRY DENSITY FOR THE SOIL IN ACCORDANCE WITH ASTM D1557.
4. CONCRETE FOUNDATIONS SHALL NOT BE PLACED ON ORGANIC OR UNSUITABLE MATERIAL. IF ADEQUATE BEARING CAPACITY IS NOT ACHIEVED AT THE DESIGNED EXCAVATION DEPTH, THE UNSATISFACTORY SOIL SHALL BE EXCAVATED TO ITS FULL DEPTH AND EITHER BE REPLACED WITH MECHANICALLY COMPACTED GRANULAR MATERIAL OR THE EXCAVATION SHALL BE FILLED WITH CONCRETE OF THE SAME TYPE SPECIFIED FOR THE FOUNDATION. CRUSHED STONE MAY BE USED TO STABILIZE THE BOTTOM OF THE EXCAVATION. ANY STONE SUB BASE MATERIAL, IF USED, SHALL NOT SUBSTITUTE FOR REQUIRED THICKNESS OF CONCRETE.
5. ALL EXCAVATIONS SHALL BE CLEAN OF UNSUITABLE MATERIAL SUCH AS VEGETATION, TRASH, DEBRIS, AND SO FORTH PRIOR TO BACK FILLING. BACK FILL SHALL CONSIST OF APPROVED MATERIALS SUCH AS EARTH, LOAM, SANDY CLAY, SAND AND GRAVEL, OR SOFT SHALE, FREE FROM CLODS OR LARGE STONES OVER 2 1/2" MAX DIMENSIONS. ALL BACK FILL SHALL BE PLACED IN COMPACTED LAYERS.
6. ALL FILL MATERIALS AND FOUNDATION BACK FILL SHALL BE PLACED IN MAXIMUM 6" THICK LIFTS BEFORE COMPACTION. EACH LIFT SHALL BE WETTED IF REQUIRED AND COMPACTED TO NOT LESS THAN 95% OF THE MODIFIED PROCTOR MAXIMUM DRY DENSITY FOR SOIL IN ACCORDANCE WITH ASTM D1557.
7. NEWLY PLACED CONCRETE FOUNDATIONS SHALL CURE A MINIMUM OF 72 HRS PRIOR TO BACK FILLING.
8. FINISHED GRADING SHALL BE SLOPED TO PROVIDE POSITIVE DRAINAGE AND PREVENT STANDING WATER. THE FINAL (FINISH) ELEVATION OF SLAB FOUNDATIONS SHALL SLOPE AWAY IN ALL DIRECTIONS FROM THE CENTER. FINISH GRADE OF CONCRETE PADS SHALL BE A MAXIMUM OF 4 INCHES ABOVE FINAL FINISH GRADE ELEVATIONS. PROVIDE SURFACE FILL GRAVEL TO ESTABLISH SPECIFIED ELEVATIONS WHERE REQUIRED.
9. NEWLY GRADED GRAVEL SURFACE AREAS TO RECEIVE GRAVEL SHALL BE COVERED WITH GEOTEXTILE FABRIC TYPE: TYPAR-3401 AS MANUFACTURED BY TYPAR GEOSYNTHETICS OR AN APPROVED EQUIVALENT, SHOWN ON PLANS. THE GEOTEXTILE FABRIC SHALL BE BLACK IN COLOR TO CONTROL THE RECURRENCE OF VEGETATIVE GROWTH AND EXTEND TO WITHIN 1 FOOT OUTSIDE THE SITE FENCING OR ELECTRICAL GROUNDING SYSTEM PERIMETER WHICH EVER IS GREATER. ALL FABRIC SHALL BE COVERED WITH A MINIMUM OF 4" DEEP COMPACTED STONE OR GRAVEL AS SPECIFIED. I.E. FDOT TYPE NO. 57 FOR FENCED COMPOUND; FDOT TYPE NO. 67 FOR ACCESS DRIVE AREA, UNLESS OTHERWISE NOTED.
10. IN ALL AREAS TO RECEIVE FILL: REMOVE ALL VEGETATION, TOPSOIL, DEBRIS, WET AND UNSATISFACTORY SOIL MATERIALS, OBSTRUCTIONS, AND DELETERIOUS MATERIALS FROM GROUND SURFACE. PLOW STRIP OR BREAK UP SLOPED SURFACES STEEPER THAN 1 VERTICAL TO 4 HORIZONTAL SUCH THAT FILL MATERIAL WILL BIND WITH (E)/PREPARED SOIL SURFACE.
11. WHEN SUB GRADE OR PREPARED GROUND SURFACE HAS A DENSITY LESS THAN THAT REQUIRED FOR THE FILL MATERIAL, SCARIFY THE GROUND SURFACE TO DEPTH REQUIRED, PULVERIZE, MOISTURE-CONDITION AND/OR AERATE THE SOILS AND RECOMPACT TO THE REQUIRED DENSITY PRIOR TO PLACEMENT OF FILLS.
12. IN AREAS WHICH (E) GRAVEL SURFACING IS REMOVED OR DISTURBED DURING CONSTRUCTION OPERATIONS, REPLACE GRAVEL SURFACING TO MATCH ADJACENT GRAVEL SURFACING AND RESTORED TO THE SAME THICKNESS AND COMPACTION AS SPECIFIED. ALL RESTORED GRAVEL SURFACING SHALL BE FREE FROM CORRUGATIONS AND WAVES.
13. (E) GRAVEL SURFACING MAY NOT BE REUSED.
14. GRAVEL SUB SURFACE SHALL BE PREPARED TO REQUIRED COMPACTION AND SUB GRADE ELEVATIONS BEFORE GRAVEL SURFACING IS PLACED AND/OR RESTORED. ANY LOOSE OR DISTURBED MATERIALS SHALL BE THOROUGHLY COMPACTED AND ANY DEPRESSIONS IN THE SUB GRADE SHALL BE FILLED AND COMPACTED WITH APPROVED SELECTED MATERIAL. GRAVEL SURFACING MATERIAL SHALL NOT BE USED FOR FILLING DEPRESSIONS IN THE SUB GRADE.
15. PROTECT (E) GRAVEL SURFACING AND SUB GRADE IN AREAS WHERE EQUIPMENT LOADS WILL OPERATE. USE PLANKING 'MATTS' OR OTHER SUITABLE PROTECTION DESIGNED TO SPREAD EQUIPMENT LOADS AS MAY BE NECESSARY. REPAIR ANY DAMAGE TO (E) GRAVEL SURFACING OR SUB GRADE WHERE SUCH DAMAGE IS DUE TO THE CONTRACTORS OPERATIONS.
16. DAMAGE TO (E) STRUCTURES AND/OR UTILITIES RESULTING FROM CONTRACTORS NEGLIGENCE SHALL BE REPAIRED AND/ OR REPLACED TO THE OWNERS SATISFACTION AT NO ADDITIONAL COST TO THE CONTRACT.
17. ALL SUITABLE BORROW MATERIAL FOR BACK FILL OF THE SITE SHALL BE INCLUDED IN THE BID. EXCESS TOPSOIL AND UNSUITABLE MATERIAL SHALL BE DISPOSED OF OFF SITE AT LOCATIONS APPROVED BY GOVERNING AGENCIES AT NO ADDITIONAL COST TO THE CONTRACT.

PG&E UTILITY BULLETIN TD-027911B-004, GENERAL INFORMATION NOTES

1. A PG&E ABSOLVING SERVICE AGREEMENT IS REQUIRED TO BE SIGNED WHEN CUSTOMER OWNED SERVICES, SUPPLING POWER TO NON-PG&E OWNED STEEL STREETLIGHT POLES WITH COMMUNICATION AND ANTENNA EQUIPMENT, ARE INTERCONNECTED TO THE PG&E DISTRIBUTION SYSTEM. CONTACT THE PG&E SERVICE PLANNING OFFICE FOR AN EXPLANATION OF AN ABSOLVING SERVICE AGREEMENT. IF NEEDED, PG&E PERSONNEL CAN CONTACT THE TARIFF INTERPRETATION OR LAW DEPARTMENTS FOR GUIDANCE.
2. THE STREET LIGHT POLE MUST HAVE A RADOME SHROUD INSTALLED AT THE TOP OF THE POLE TO HOUSE THE ANTENNA AND METERING EQUIPMENT. THE SHROUD MUST BE MADE OF FIBERGLASS OR OTHER MATERIAL THAT DOES NOT INHIBIT THE TRANSMISSION OF THE WIRELESS METER SIGNAL. THE SHROUD OR A PART OF THE SHROUD MUST BE REMOVABLE OR OPEN TO ALLOW DIRECT ACCESS TO THE METER INSIDE. SEE FIGURE 7. OTHER DESIGNS FOR THE PLACEMENT OF THE ANTENNA AND METERING EQUIPMENT ARE NOT BEING ACCEPTED.
3. A 2-WIRE (1-HOT, 1-NEUTRAL) 120 VOLT SINGLE-PHASE SERVICE MUST BE INSTALLED FROM THE PG&E SPECIFIED SPLICE BOX TO THE POLE. THIS IS THE ONLY TYPE OF SERVICE ALLOWED TO POWER THE SMARTPOLE METER ALONG WITH THE CUSTOMER AND 3RD PARTY EQUIPMENT. THE CUSTOMER SERVICE WIRE MUST BE SIZED AS NEEDED TO ACCOMMODATE ALL METERED AND UNMETERED LOADS.
   NOTE: IN VERY LIMITED LOCATIONS IF AN EXISTING PG&E 2-WIRE SINGLE-PHASE 240 VOLT SECONDARY SYSTEM IS AVAILABLE THE SMARTPOLE METER MAY BE CONNECTED. THESE LOCATIONS ARE NOT COMMON.
4. CAUTION: DO NOT INSTALL A 3-WIRE 1-PHASE 120/240 VOLT SERVICE AS THIS IS THE INCORRECT WIRING AND VOLTAGE FOR THE SMARTPOLE METERING APPLICATION.
5. THE ANTENNA, COMMUNICATION EQUIPMENT, AND STREET LIGHT MUST BE POWERED FROM THE SAME CUSTOMER OWNED SERVICE. A SECOND OR SEPARATE CUSTOMER OWNED SERVICE IS NOT ALLOWED.
6. DISCONNECT SWITCH REQUIREMENTS: A DISCONNECT SWITCH MUST BE INSTALLED AND MEET ALL OF THE FOLLOWING REQUIREMENTS BELOW.

6.1 THE SWITCH MUST BE READILY ACCESSIBLE AT ALL TIMES. THE SWITCH WILL BE USED AS PART OF THE NORMAL OR EMERGENCY SHUTDOWN PROTOCOLS REQUIRED IN CALIFORNIA PUBLIC UTILITY COMMISSION (CPUC) GENERAL ORDER 95, RULE 94.

6.2 THE SWITCH SHALL DE-ENERGIZE ALL POWER SUPPLIES, INCLUDING BACK-UP POWER, AND ANY COMMUNICATION EQUIPMENT EMITTING RADIO FREQUENCIES (RF). SIGNAGE MUST BE ATTACHED TO THE SWITCH IDENTIFYING WHAT EQUIPMENT IT WILL DE-ENERGIZE.

6.3 THE SWITCH MUST NOT DE-ENERGIZE (TURN OFF) THE STREET LIGHT(S) OR THE PG&E SMARTMETER. SEE THE SINGLE LINE DRAWING IN FIGURE 6.

6.4 THE SWITCH MUST BE ATTACHED EXTERNALLY ON THE POLE LESS THAN 10 FEET ABOVE GRADE, AS MEASURED TO THE TOP OF THE SWITCH ENCLOSURE.

6.5 IF THE SPECIFIC REQUIREMENTS ARE MET THE SWITCH MAY BE LOCATED INSIDE AN EQUIPMENT PEDESTAL, THAT IS INSTALLED AROUND THE BASE OF THE POLE. A PERMANENT AND DEDICATED SIDE HINGED DOOR WITH LOCKING PROVISIONS DEDICATED ONLY FOR A PG&E PAD-LOCK (5/16" SHAFT) MUST BE PROVIDED TO ALLOW EASY ACCESS TO THE DISCONNECT SWITCH. THIS DISCONNECT ACCESS DOOR CAN BE PART OF A LARGER MAINTENACE DOOR IF NEEDED. SEE FIGURES 2 THROUGH 5 FOR ADDITIONAL DETAILS. LOCK BOXES, SHARED KEYS, OR OTHER LOCKING METHODS ARE NOT ACCEPTABLE.

6.6 THE SWITCH MAY NOT BE INSTALLED INSIDE THE POLE (EXCEPT INSIDE THE PEDESTAL), IN A SUBSURFACE ENCLOSURE, OR IN A REMOTE LOCATION AWAY FROM THE POLE.

6.7 PROVISIONS FOR LOCKING THE DISCONNECT SWITCH IN THE OFF POSITION ARE REQUIRED.

7. POLES MUST HAVE SIGNAGE THAT MEET FCC GUIDELINES FOR THE ANTENNAS AND COMMUNICATION EQUIPMENT EMITTING RF TRANSMISSION. SITES SHALL BE SIGNED ACCORDING TO FCC GUIDELINES.
8. ANTENNAS AND POWER UNITS MUST HAVE AN OWNERSHIP LABEL WITH THE COMPANY'S NAME, CONTACT NUMBER, AND SITE IDENTIFICATION INFORMATION.
9. ALL MATERIALS, EXCEPT THE PG&E METER, SHALL BE FURNISHED AND INSTALLED BY THE CUSTOMER. INCLUDING THE 3-PIN SOCKET AND PROVISIONS FOR THE METER TO BE SECURLY ATTACHED INSIDE THE SHROUD. THE PG&E METER ENGINEERING DEPARTMENT WILL REVIEW AND APPROVE THESE ATTACHMENT PROVISIONS FOR THE METER.
10. THE METERING PROVISION CONTAINED HEREIN IS AN EXCEPTION TO THE GREENBOOK REQUIREMENT AND IS DESIGNED PRIMARILY FOR WI/FI, CABLE TV POWER SUPPLIES, AND OTHER TELECOM EQUIPMENT REQUIRING METERING. REFER TO, TARIFF APPLICATION GUIDE – ELECTRIC RULE 9. DO NOT CONNECT ANY OTHER TYPES OF LOAD TO THIS SERVICE EXCEPT FOR ANTENNA AND COMMUNICATION EQUIPMENT, AND STREET LIGHTS.
11. THE LOCAL AUTHORITY HAVING JURIDICTION (AHJ) OF INSPECTIONS FOR THE CITY OR COUNTY MUST PROVIDE APPROVAL OF FINAL INSPECTION AND METER RELEASE BEFORE PG&E WILL INSTALL A METER AND ENERGIZE THE CUSTOMER'S ELECTRIC SERVICE.
12. A PG&E INSPECTOR OR TROUBLE MAN (T-MAN) MUST INSPECT THE INSTALLATION TO VERIFY THE REQUIREMENTS IN THIS DOCUMENT HAVE BEEN MET.
13. PG&E VEHICLE (BUCKET TRUCK) ACCESS UP TO AND AROUND THE POLE IS REQUIRED AT ALL TIMES. THIS INCLUDES A ROAD WHICH ALLOWS THE PG&E VEHICLE TO DRIVE UP NEXT TO THE POLE AND HAVE AN ADEQUATE AREA TO BACK UP, MANEUVER, AND EXIT. THIS VEHICLE DRIVE UP ACCESS IS REQUIRED FOR THE INSTALLATION AND MAINTENANCE OF THE PG&E METER.
14. FOR SERVICE CONNECTIONS TO STEEL POLES THAT ARE NOT ON AN LS-2 RATE, OR IF THE REQUIREMENTS IN THIS DOCUMENT CANNOT BE MET, THEN THE PG&E APPROVED METHOD OF PROVIDING SERVICE TO A PAD-MOUNTED METERING PEDESTAL SHOULD BE USED.

MISCELLANEOUS MATERIALS

FROM TIME TO TIME IT MAY BE NECESSARY TO MAKE MINOR ADJUSTMENTS TO ACCOMMODATE, LEVEL OR SPACE ANTENNA MOUNTS AND EQUIPMENT. EXAMPLE ADDING A WASHER OR SHIM TO LEVEL OUT A BRACKET OR MOUNT TO MEET SPECIFICATIONS. HAVING TO OFFSET OR SPACE A BRACKET OR MOUNT DUE TO FLANGES AND OR OTHER SMALL PROTRUSIONS ON A POLE TOP ASSEMBLY. ANY MATERIALS, NUTS, BOLTS, SHIMS OR SPACERS USED TO ACCOMMODATE ADJUSTMENTS TO ANTENNA MOUNTS AND EQUIPMENT MUST BE PERMANENTLY AFFIXED, BOLTED TO THE MOUNT, BRACKET OR POLE; AS NEVER TO BECOME A FALL HAZARD. ALL MATERIALS NUTS, BOLTS, SHIMS OR SPACERS USED IN MINOR ADJUSTMENTS, MUST BE EITHER STAINLESS STEEL OR GALVANIZED; HALF WASHERS ARE PROHIBITED. ANY MINOR ADJUSTMENTS TO ACCOMMODATE ANTENNA MOUNTS AND EQUIPMENT SHOULD BE DONE IN A PROFESSIONAL MANOR WITH SAFETY AND AESTHETICS IN MIND. SHOULD YOU HAVE ANY QUESTIONS CONTACT YOUR ASSIGNED CONSTRUCTION PROJECT MANAGER OR ENGINEER FOR GUIDANCE.

mobilitie®
intelligent infrastructure

cable engineering services
PRESCOTT COMMUNICATIONS INC.
10640 Sepulveda Blvd. Suite 1, Mission Hills, CA 91345
Phone No.: (818)898-2352 Fax No.: (818)898-9186

PROJECT NO:	9CAB008036
DRAWN BY:	MD
CHECKED BY:	JM

0	06/16/17	90% CONSTRUCTION
1	09/28/17	REVISED PER PG&E STANDARDS
2	04/05/18	REVISED PER NEW PG&E STANDARDS

IT IS A VIOLATION OF THE LAW FOR ANY PERSON, UNLESS THEY ARE ACTING UNDER THE DIRECTION OF A LICENSED PROFESSIONAL ENGINEER, TO ALTER THIS DOCUMENT

9CAB008036
OAKLAND, CA 94612
(E) 30'-0" STEEL LIGHT POLE

SHEET TITLE
GENERAL NOTES

SHEET NUMBER
GN-3

DURATION NOTES

1. "ROAD WORK AHEAD" and the "BE PREPARED TO STOP" signs may be omitted if all of the following conditions are met:

a. Work operations are 60 minutes or less
b. Speed limit is 45 MPH or less
c. No sight obstructions to vehicles approaching the work area for a distance equal to the buffer space
d. Vehicles in the work area have high-intensity, rotating, flashing, oscillating, or strobe lights operating
e. Volume and complexity of the roadway has been considered

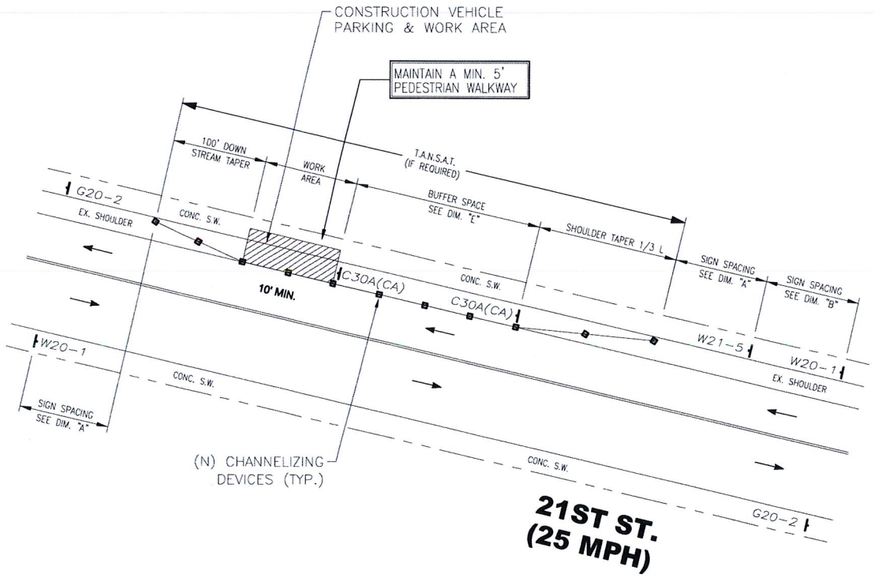

SIGNS

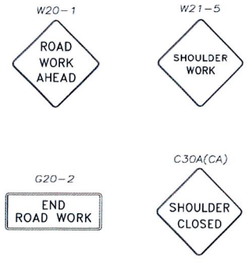

* ADDITIONAL SIGNS MAY BE REQUIRED TO ACCOMMODATE ACTUAL FIELD CONDITIONS.

WORK ON SHOULDER / PARKING

2016 WATCH PAGE 30

LEGEND

- CHANNELIZING DEVICE
- SIGN
- WORK SPACE
- FLAGGER
- DIRECTION OF TRAFFIC

N

TRAFFIC CONTROL PLANS

GENERAL NOTES

1. ALL WORK AND MATERIALS SHALL COMPLY WITH THE WORK AREA TRAFFIC CONTROL HANDBOOK (WATCH) 2016 EDITION.
2. ALL STRIPING AND MARKINGS SHALL CONFORM TO THE STATE OF CALIFORNIA, STANDARD PLANS AND SPECIFICATIONS, INCLUDING STANDARD PLAN A-20, DETAILS.
3. THE CONTRACTOR SHALL PROVIDE FOR ACCESS TO ALL ADJACENT PROPERTIES.
4. FLASHING YELLOW BEACONS, TYPE "B", SHALL BE USED ON ALL W20-1 SIGNS AND ON ALL TYPE III BARRICADES GUARDING THE WORK AREA OVERNIGHT.
5. ALL SIGNS SHALL BE REFLECTORIZED AND STANDARD SIZE.
6. ALL TUBULAR DELINEATORS AND CONES SHALL BE 28" MINIMUM HEIGHT, REFLECTORIZED AND MAINTAINED ERECT IN THE INDICATED POSITION AT ALL TIMES, AND SHALL BE REPAIRED, REPLACED, OR CLEANED AS NECESSARY TO PRESERVE THEIR APPEARANCE AND CONTINUITY, AND SHALL INCLUDE A 12" HIGH-INTENSITY REFECTORIZED SLEEVE, IF USED DURING NIGHT-TIME HOURS.
7. THE CONTRACTOR SHALL MAINTAIN, ON A CONTINUOUS BASIS, ALL SIGNS, DELINEATORS, BARRICADES, ETC., TO ENSURE PROPER FLOW AND SAFETY OF TRAFFIC DURING CONSTRUCTION.
8. THE CONTRACTOR SHALL HAVE ALL SIGNS, DELINEATORS, BARRICADES, ETC., PROPERLY INSTALLED PRIOR TO COMMENCING CONSTRUCTION.
9. CONSTRUCTION OPERATIONS SHALL BE CONDUCTED IN SUCH A MANNER AS TO CAUSE AS LITTLE INCONVENIENCE AS POSSIBLE TO ABUTTING PROPERTY OWNERS.
10. ADDITIONAL TRAFFIC CONTROLS, TRAFFIC SIGNS, OR BARRICADING MAY BE REQUIRED IN THE FIELD. THE CONTRACTOR SHALL BE RESPONSIBLE FOR THE PLACEMENT OF ANY ADDITIONAL DEVICES NECESSARY TO ASSURE SAFETY TO THE PUBLIC AT ALL TIMES DURING CONSTRUCTION.
11. EXACT LOCATION AND TYPE OF CONSTRUCTION SIGNS SHALL BE DIRECTED BY THE ENGINEER BASED UPON CONSTRUCTION CONDITIONS.
12. MOVE DELINEATORS AND/OR CONES TO SIDEWALK DURING NON-WORKING HOURS. REMOVE BARRICADES ETC. FROM TRAVEL LANE.
13. REMOVE OR TURN OFF SIGNS DURING NON-WORK HOURS.
14. ALL CONFLICTING LINES, EXISTING CURB PAINT, AND MARKINGS SHALL BE REMOVED BY WET SANDBLASTING OR OTHER APPROVED METHOD PRIOR TO INSTALLATION OF NEW/TEMPORARY STRIPING. ALL CONFLICTING RAISED PAVEMENT MARKERS SHALL BE REMOVED. PAVEMENT THAT IS DAMAGED DUE TO REMOVAL OF MARKERS SHALL BE REPAIRED TO THE SATISFACTION OF THE CITY ENGINEER AND/OR STATE INSPECTOR.

NOTES

1. INGRESS AND EGRESS MUST BE PROVIDED TO ALL DRIVEWAYS AT ANY TIME, USE BULL NOSE TO TERMINATE TAPER AT DRIVEWAYS.
2. STEEL PLATES TO BE USED TO MAINTAIN TRAFFIC FLOW ON ALL DRIVEWAYS.

TEMPORARY TRAFFIC CONTROL PLAN DIMENSION GUIDELINES

SPEED MPH (2)	Dimension A/B/C ADVANCE WARNING SIGN SPACING (5)	Dimension L MERGING TAPER LENGTH	Dimension L/2 SHIFTING TAPER LENGTH	Dimension L/3 MINIMUM SHOULDER TAPER	Dimension "E" BUFFER SPACE (4-A) and FLAGGER STATION STOPPING SIGHT DISTANCE (4-B) (0%) (-3%) (-6%)	MAXIMUM CHANNELIZER TAPER SPACING (3)	MAXIMUM CHANNELIZER TANGENT SPACING (3)	MAXIMUM CHANNELIZER CONFLICT SPACING (6)
MPH	ft	ft	ft	ft	ft	ft	ft	ft
25	100	125	65	45	(155) (160) (165)	25	50	12
30	250	180	90	60	(200) (205) (215)	30	60	15
35	250	245	125	85	(250) (260) (275)	35	70	17
40	250	320	160	110	(305) (315) (335)	40	80	20
45	350	540	270	180	(360) (380) (400)	45	90	22
50	350	600	300	200	(425) (450) (475)	50	100	25
55	500	660	330	220	(495) (520) (555)	50	100	25
60	500	720	360	240	(570) (600) (640)	50	100	25
65	500	780	390	260	(645) (685) (730)	50	100	25

(1) Work on Freeways and Expressways shall meet the Caltrans Standard Plans and Standard Specification requirements.
(2) Posted Speed or observed operating speed (whichever is greater).
(3) Channelizer spacing shall be reduced by half at areas where work is taking place on curves or areas of head-on conflict.
(4-A) Buffer space may be inserted in low-speed urban areas and should be inserted in high-speed urban and rural areas.
(4-B) The Stopping Sight Distance should enable Road Users to see the Primary Flagger Station and safety stop.
(5) Sign spacing in rural areas should be 500 ft.
(6) ** Table 6F-101(CA)

TRAFFIC CONTROL PLAN — SCALE: NOT TO SCALE — 1

mobilitie®
intelligent infrastructure

CES cable engineering services
PRESCOTT COMMUNICATIONS INC.
10640 Sepulveda Blvd. Suite 1, Mission Hills, CA 91345
Phone No.: (818)898-2352 Fax No.: (818)898-9186

PROJECT NO:	9CAB008036
DRAWN BY:	MD
CHECKED BY:	JM

0	06/16/17	90% CONSTRUCTION
1	09/28/17	REVISED PER PG&E STANDARDS
2	04/05/18	REVISED PER NEW PG&E STANDARDS

IT IS A VIOLATION OF THE LAW FOR ANY PERSON, UNLESS THEY ARE ACTING UNDER THE DIRECTION OF A LICENSED PROFESSIONAL ENGINEER, TO ALTER THIS DOCUMENT

9CAB008036
OAKLAND, CA 94612
(E) 30'-0" STEEL LIGHT POLE

SHEET TITLE
TRAFFIC CONTROL PLAN

SHEET NUMBER
TC-1

view from 21st Street looking northeast at site

mobilitie
intelligent infrastructure

9CAB008036/SF90XSA24B
21st Street & Kaiser Plaza, Oakland, CA
Photosims Produced on 6-26-2017

Existing



Proposed

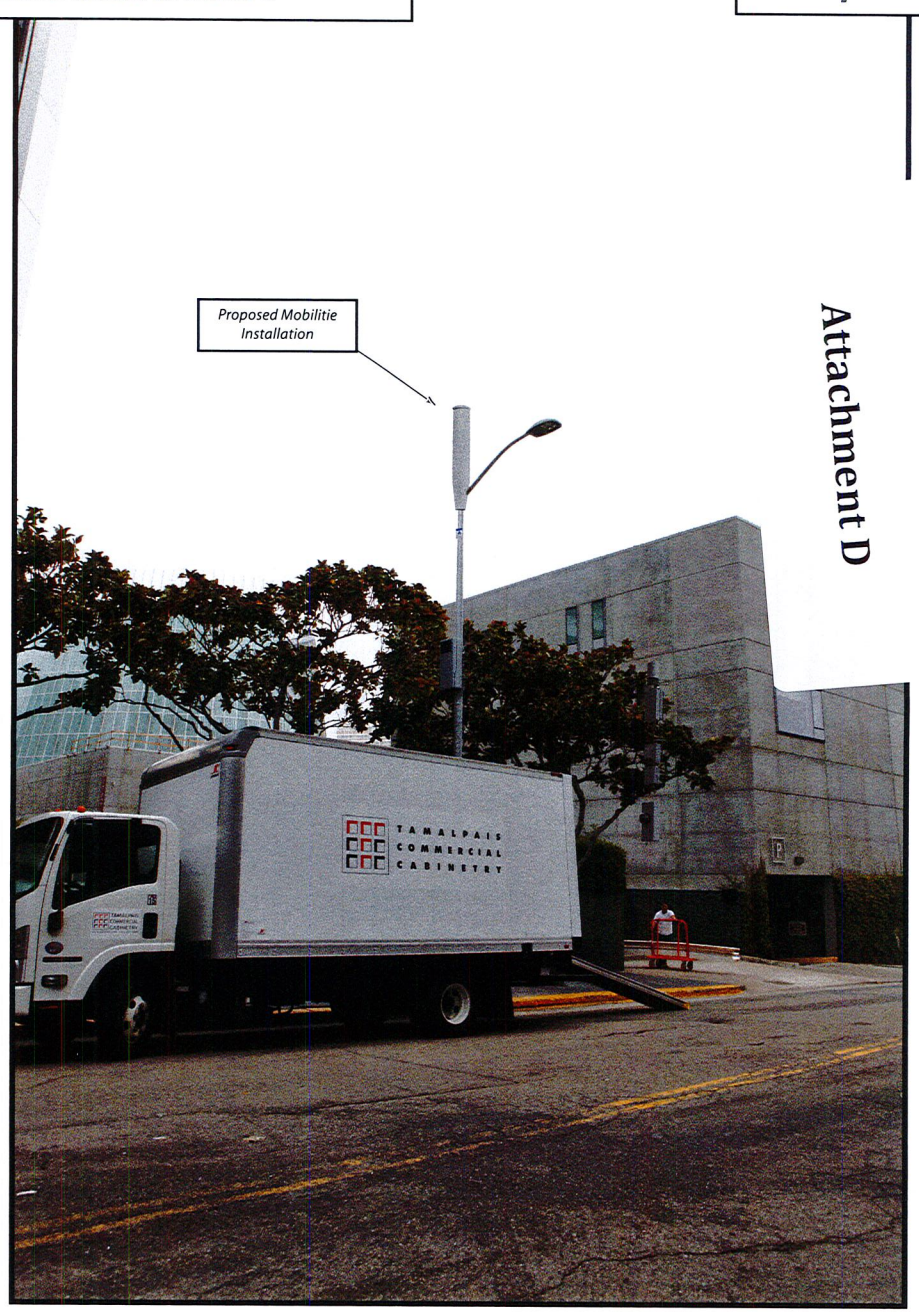

Attachment D

AdvanceSim
Photo Simulation Solutions
Contact (925) 202-8507

Existing



Proposed



view from 21st Street looking west at site

AdvanceSim
Photo Simulation Solutions
Contact (925) 202-8507

mobilitie
intelligent infrastructure

9CAB008036/SF90XSA24B
21st Street & Kaiser Plaza, Oakland, CA
Photosims Produced on 6-26-2017

Mobilitie, LLC
2955 Red Hill Ave, Ste. 200
Costa Mesa, CA 92626
USA Tel: 714.415.4500
www.mobilitie.com

Alternative Site Analysis

Proposed Small Cell Wireless Facility

Applicant: Mobilitie, LLC
Site ID: 9CAB008036/SF90XSA24B
Nearest Site Address: Public Right of Way near 1 Kaiser Plz., Oakland, CA 94612
Latitude/Longitude: 37.809545, -122.263902

Mobilitie considered alternative sites on other street lights and utility poles in this area, but found them to not to be as desirable when taking into consideration coverage goals, constructability, geographic topography of the surrounding area, and potential visual impact in the surrounding area. The proposed location is desirable because of the limited obstructions in the area, allowing our antenna to effectively propagate a signal. Furthermore, the proposed location is the optimal solution for providing maximum coverage to the surrounding area identified. Additionally, by locating on an existing street light with equipment concealed, visual impact in the surrounding area is minimized.

Mobilitie is a privately held, CLEC (Competitive Local Exchange Carrier) regulated by the California Public Utilities Commission (CPUC) to provide telephone related services. By proposing this location on an existing street light in the public right of way, Mobilitie is proposing an appropriate co-location to existing infrastructure according to our rights under the CPUC.

The alternative locations that Mobilitie considered include, but are not limited to, the sites listed below:

Alternate B (37.809552, -122.264662) / At the intersection of 21st Street and Kaiser Plaza: This steel street light is located approximately 65 meters east of our proposal. The structures surrounding the alternate candidate and the overhang of the trees directly behind the alternate candidate illustrates the difficulty our antenna would encounter in providing coverage. The height of the building and the trees directly behind the alternate candidate would proves technically problematic for the antenna by blocking the signal needed for the end user.

Alternate C (37.810594, -122.265605) / At the intersection of 22nd Street and Webster Street: The structures surrounding the alternate candidate illustrate the difficulty our antenna would encounter in providing coverage. The height of the buildings directly behind and in front of the alternate candidate, in addition to the overhang of the tree adjacent to the alternate candidate, would prove technically problematic for the antenna by blocking the signal needed for the end user.

Attachment E

CONFIDENTIALITY NOTICE | The message contains confidential and proprietary information, including all attachments (if any), to this message even if such attachments are not separately marked as confidential and/or proprietary. Such information is exclusively for the addressee(s) and no others, unless and to the extent expressly stated above to the contrary. If the recipient of this message is not the addressee, such recipient is prohibited from reading or using this message in any way. If you have received this message by mistake, please call us immediately and destroy the message and all attachments.

Radio Frequency- Electromagnetic Energy-EME
Measurements & Compliance Report

Site ID:	9CAB008036
Site Name:	9CAB008036
Market/Region:	California
Address:	21ST ST., E. OF KAISER PLAZA OAKLAND, CA 94612
Latitude:	37.809545
Longitude:	-122.263902
Site Type:	STEEL LIGHT POLE

Compliance Status:

Proposed equipment at the site is compliant with FCC guidelines for General Population environments

Prepared for:

Mobilitie, LLC
2220 University Drive,
Newport Beach, CA 92660

By
ATG LLC

Attachment F

Date:09/06/2017



TABLE OF CONTENT

1 EXECUTIVE SUMMARY 3

2 MAXIMUM PERMISSIBLE EXPOSURE (MPE) MODELING RESULTS FOR PROPOSED SITE 3

3 ANTENNA INVENTORY 4

4 MODELING SUMMARY AND ASSUMPTIONS 4

4.1 GENERAL MODEL ASSUMPTIONS 4

5 PREPARER CERTIFICATION 5

APPENDIX A 6

FEDERAL COMMUNICATIONS COMMISSION (FCC) REQUIREMENTS 6

APPENDIX B 9

GLOSSARY OF TERMS 9

APPENDIX C 10

ROOFVIEW EXPORT FILE 10

1 Executive Summary

Purpose of Report

ATG LLC's RF Engineering has conducted radio frequency electromagnetic energy (RF-EME) modeling for Mobilitie LLC's site 9CAB008036 located on 21st St. between Kaiser Plaza and Harrison St., Oakland, CA to determine RF-EME exposure levels from the carrier's proposed wireless communications equipment.

The Federal Communications Commission (FCC) has developed Maximum Permissible Exposure (MPE) limits for general public and occupational exposures to RF-EME. This report summarizes the results of RF-EME modeling in relation to relevant FCC compliance standards for limiting human exposure to RF-EME. The details of FCC defined exposure limits are provided in Appendix A of this report.

Analysis results included in this report are based on drawings dated Jun 16th, 2017.

Statement of Compliance

Predictive modeling conducted using the original equipment manufacturers (OEMs) specifications for radio and antenna performance along with the supplied construction drawings dated Jun 16th, 2017, indicate there will be no exposure due to the carrier's proposed equipment on accessible ground-level walking surface at this site that exceeds the FCC's general public exposure limits.

Proposed equipment at the site is compliant with FCC guidelines for general population environments.

2 Maximum Permissible Exposure (MPE) Modeling Results for Proposed Site

The predictive modeling was conducted using the RoofView 5.0 suite of analysis tools. The modeling was conducted with the antennas operating at 100% capacity, all antenna channels transmitting simultaneously and the radio transmitters operating at full power. Obstructions (trees, buildings etc.) that would normally attenuate the signal are not taken into account. As a result, the predicted signal levels are more conservative (higher) than the actual signal levels would be during normal operations. The modeling calculations were made for an area 40'x 40' area with the equipment at the center.

Table 1: Maximum Permissible Exposure- Summary

Location	% of FCC General Public/Uncontrolled Exposure Limit	% of FCC Occupational/Controlled Exposure Limit	Power Density (mW/cm^2)	Compliance Status
6ft above ground level	2.0	0.4	0.02	Compliant

3 Antenna Inventory

The Antenna Inventory shows all transmitting antennas on the site (see Table 2). This inventory was used by ATG to perform the software modeling of RF emissions. The inventory conforms with the submitted construction drawings which identifies the proposed mounting location of each antenna at the site. The exposure level is calculated for a person of height 6ft standing right below the devices at ground level.

Table 2: Antenna Inventory

Antenna ID	Carrier/Operator	Antenna Type	Frequency (MHz)	Technology	ERP (W)	Gain dBd	Mfg.	Model	Aperture (ft.)	Transmitter count	Horizontal BeamWidth (deg)	Z (6 ft. above Ground)
1	Mobilitie	Omni	2496	LTE	172.58	6.35	Alpha Wireless	AW3477-S	2.56	2	360	26
2	Mobilitie	LTE Relay BH	2496	LTE	1.93	9.85	Airspan	iR460	1.1	1	35	10.5

The table below details the operating power and Effective Radiated Power (ERP) for each carrier and frequency used in the modeling.

Frequency (MHz)	Power per Transmitter (Watts)	# of Transmitters	ERP (watts)
2496 (Omni)	20	2	172.58
2496 (UE Relay)	0.2	1	1.93

4 Modeling Summary and Assumptions

4.1 General Model Assumptions

The modeling was conducted using the antenna and radio maximum power values, while operating at full power with 100% duty cycle.

The site has been modeled with these assumptions to calculate the maximum RF energy density. ATG believes this to be a worst case analysis, based on data supplied by the OEMs and client. If actual power density measurements were made, ATG believes the real time measurements would indicate levels below those shown in the report.

5 Preparer Certification

I, Preparer, state that:

- I am an employee of ATG LLC that provides RF-EME safety and compliance services to the wireless communications industry.
- I have successfully completed 100s of RF-EME exposure studies and reports for various carriers.
- I am aware of the potential hazards from RF-EME exposures that would be classified "occupational" or "general public" under the FCC regulations.
- I am familiar with the FCC rules and regulations as well as OSHA regulations both in general and as they apply to RF-EME exposure.
- I have reviewed all the data related to the site and incorporated it into this study and Compliance Report such that the information contained in this report is true and accurate to the best of my knowledge.

Ahmed Saadallah

Ahmed Saadallah (RF Engineer)

Appendix A

Federal Communications Commission (FCC) Requirements

This appendix summarizes the policies, guidelines and requirements that were adopted by the FCC on August 1, 1996, amending Part 1 of Title 47 of the Code of Federal Regulations, and further amended by action of the Commission on August 25, 1997 (see 47 CFR Sections 1.1307(b), 1.1310, 2.1091 and 2.1093, as amended). Commission actions granting construction permits, licenses to transmit or renewals thereof, equipment authorizations or modifications in existing facilities, require the preparation of an Environmental Assessment (EA), as described in 47 CFR Section 1.1311, if the particular facility, operation or transmitter would cause human exposure to levels of radiofrequency (RF) electromagnetic fields in excess of these limits.

The potential hazard associated with the RF electromagnetic fields is discussed in OET Bulletin No. 65. This document can be obtained on the FCC website. (https://transition.fcc.gov/Bureaus/Engineering_Technology/Documents/bulletins/oet65/oet65.pdf)

As per FCC guidelines there are two separate tiers of exposure limits that are based upon occupational/controlled exposure limits (for workers) and general public/uncontrolled exposure limits for members of the general public.

Occupational/controlled exposure limits apply to situations in which persons are exposed as a consequence of their employment and in which those persons who are exposed have been made fully aware of the potential for exposure and can exercise control over their exposure. Limits for occupational/controlled exposure also apply in situations when an individual is transient through a location where occupational/controlled limits apply provided he or she is made aware of the potential for exposure and can exercise control over his or her exposure by leaving the area or by some other appropriate means

General public/uncontrolled exposure limits apply to situations in which the general public may be exposed or in which persons who are exposed as a consequence of their employment and not be made fully aware of the potential for exposure or cannot exercise control over their exposure.

The FCC's MPE limits for field strength and power density are given in Table 1 (and in 47 CFR § 1.1310) Figure 1 is a graphical representation of the limits for plane-wave (far-field) equivalent power density versus frequency. The FCC's limits are generally applicable to all facilities, operations and transmitters regulated by the Commission, and compliance is expected with the appropriate guidelines. The power density limits vary by frequency to take into account the different types of equipment that may be in operation at a particular facility and are "time-averaged" limits to reflect different durations resulting from controlled and uncontrolled exposures.

(A) Limits for Occupational/Controlled Exposure

Frequency Range (MHz)	Electric Field Strength (E) (V/m)	Magnetic Field Strength (H) (A/m)	Power Density (S) (mW/cm^2)	Averaging Time $|E|^2$, $|H|^2$ or S (minutes)
0.3-3.0	614	1.63	(100)*	6
3.0-30	1842/f	4.89/f	($900/f^2$)*	6
30-300	61.4	0.163	1.0	6
300-1500	--	--	f/300	6
1500-100,000	--	--	5	6

(B) Limits for General Population/Uncontrolled Exposure

Frequency Range (MHz)	Electric Field Strength (E) (V/m)	Magnetic Field Strength (H) (A/m)	Power Density (S) (mW/cm^2)	Averaging Time $|E|^2$, $|H|^2$ or S (minutes)
0.3-1.34	614	1.63	(100)*	30
1.34-30	824/f	2.19/f	($180/f^2$)*	30
30-300	27.5	0.073	0.2	30
300-1500	--	--	f/1500	30
1500-100,000	--	--	1.0	30

f = frequency in MHz *Plane-wave equivalent power density

f = frequency in MHz *Plane-wave equivalent power density

Table 1

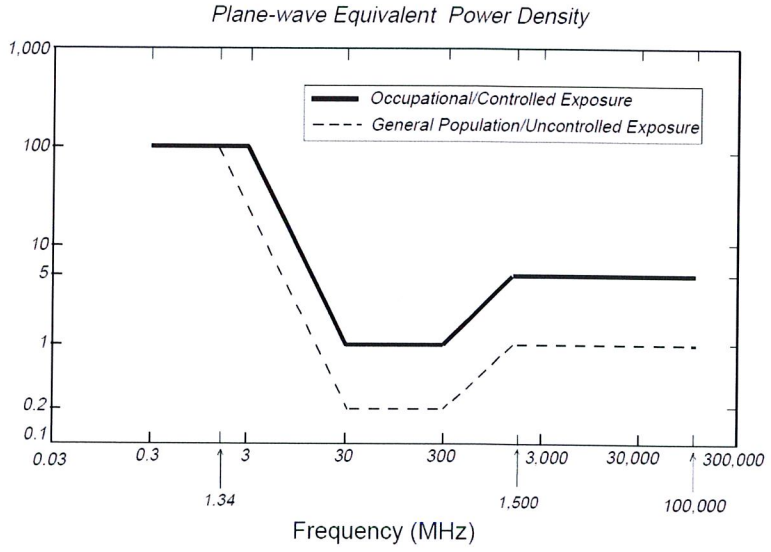

Figure 1. FCC Limits for Maximum Permissible Exposure (MPE)

FCC Compliance Requirement

In general, as specified in 47 C.F.R. 1.1307(b), as amended, when the FCC's guidelines are exceeded in an accessible area due to the emissions from multiple fixed transmitters the following policy applies. Actions necessary to bring the area into compliance with the guidelines are the shared responsibility of all licensees whose transmitter's contribution to the RF environment at the non-complying area exceeds 5% of the exposure limit (that applies to their particular transmitter) in terms of power density or the square of the electric or magnetic field strength.

For non-compliant sites, Occupational Safety and Health Administration (OSHA) set recommendations to make the sites compliant. The document can be found in the link: https://www.osha.gov/dte/library/radiation/nir_stds_20021011/nir_stds_20021011.ppt

Appendix B

Glossary of Terms

1. *Electromagnetic Field (energy density)* – the electromagnetic energy contained in an infinitesimal volume divided by that volume.

2. *Exposure* – Exposure occurs whenever and wherever a person is subjected to electric, magnetic or electromagnetic fields other than those originating from physiological processes in the body and other natural phenomena.

3. *General Population / Uncontrolled Exposure* – applies to human exposure to RF fields when the general public is exposed or in which persons who are exposed as a consequence of their employment may not be made fully aware of the potential for exposure or cannot exercise control over their exposure. Therefore, members of the general public always fall under this category when exposure is not employment-related.

4. *Maximum Permissible Exposure (MPE)* – the rms and peak electric and magnetic field strength, their squares, or the plane-wave equivalent power densities associated with these fields to which a person may be exposed without harmful effect and with an acceptable safety factor.

5. *Occupational / Controlled Exposure* – applies to human exposure to RF fields when persons are exposed as a consequence of their employment and in which those persons who are exposed have been made fully aware of the potential for exposure and can exercise control over their exposure. Occupational/controlled exposure limits also apply where exposure is of a transient nature as a result of incidental passage through a location where exposure levels may be above general population/controlled limits.

6. *Power Density (S)* – Power per unit area normal to the direction of propagation, usually expressed in units of watts per square meter (W/m^2) or, for convenience, units such as milliwatts per square centimeter (mW/cm^2) or microwatts per square centimeter ($\mu W/cm^2$).

Appendix C

RoofView Export File

The below file shows the Antenna information that has been used to calculate the MPE levels using RoofView 5. RoofView is a powerful, Excel based software analysis tool for evaluating radiofrequency (RF) field levels at telecommunications sites that are produced by antennas of the type commonly used in the cellular, paging, SMR, PCS and conventional two-way radio communication services

StartMapDefinition

Roof Max	Roof Max	Map Max '	Map Max :	Y Offset	X Offset	Number of	envelope		List Of Are
40	40	200	200	0	0	1	$K$181:$A	$K$181:$AX$220	$K$181:$A

StartSettingsData

Standard	Method	Uptime	Scale Fact	Low Thr	Low Color	Mid Thr	Mid Color	Hi Thr	Hi Color	Over Color	Ap Ht Mult	Ap Ht Method
4	1	4	1	5	1	100	6	1000	3	5	1.5	1

StartAntennaData It is advisable to provide an ID (ant 1) for all antennas

ID	Name	(MHz) Freq	Trans Power	Trans Count	Coax Len	Coax Type	Other Loss	Input Power	Calc Power	Mfg	Model	(ft) X	(ft) Y	(ft) Z	Type	(ft) Aper	dBd Gain	BWdth Pt Dir	Uptime Profile	ON flag
1	Mobilitie	2496						40	40	Alpha Wire	AW3477-S	20	20	26	VC	2.5	6.35	360		ON•
2	Mobilitie	2496						0.2	0.2	Airspan	iR460	20	20	10.5	VC	1.1	9.85	35		ON•

StartSymbolData

Sym	Map Mark	Roof X	Roof Y	Map Label	Description (notes for this table only)

STATE OF CALIFORNIA Edmund G. Brown Jr., Governor

PUBLIC UTILITIES COMMISSION
505 VAN NESS AVENUE

SAN FRANCISCO, CA 94102-3298

July 7, 2017

Ankur Patel
Mobilitie LLC
2955 Red Hill Ave, Ste. 200
Costa Mesa, CA 92626

Dear Mr. Patel:

Mobilitie LLC submitted a Notice of Proposed Construction Mobilitie NPC2017-38 for the installation of 95 new wireless facilities in the County of Alameda, California. The NPC requests the Energy Division to act upon Mobilitie's request for a determination that the proposed project is consistent with the actions identified as categorically exempt from the California Environmental Quality Act (CEQA) by the California Public Utilities Commission (Commission).

On July 22, 2010, Mobilitie submitted A.10-07-023 seeking the authority to provide full-facilities based, resold competitive local exchange, and interexchange service in California. In the application, Mobilitie explained that their projects would involve the installation of underground conduit in existing rights of way and utility easements, replacement of existing utility poles, installation of new poles, and installation of underground vaults to accommodate small cell communications equipment. Under D. 10-12-004, the Commission determined that the projects planned by Mobilitie would fall within one of several categorical exemptions under CEQA, and that further environmental review would not be required

The Energy Division has reviewed Mobilitie's proposal to install 95 new wireless facilities in the County of Alameda , California and has determined that the proposed project is consistent with the actions identified by the Commission as categorically exempt from CEQA. The Energy Division hereby grants Mobilitie with the authority to proceed with the construction of the project as described in the NPC.

Sincerely,

Jensen Uchida
California Public Utilities Commission
Regulatory Analyst

Attachment G


Always Fresh. Always On.
CANTEEN.COM
CANTEEN
CANTEEN