Appendix A – Project Description

- *Narrative Project Description - 2700 International.* March 2024.
- Pyatok Architects, Inc. *2700 International Blvd., Oakland, CA 94601 - 50CD Drawing Set.* Oakland, CA : s.n., November 18, 2022.

PROJECT DESCRIPTION – 2700 INTERNATIONAL

The **2700 International** project proposes to demolish existing improvements and construct a new, six story building on a 0.61-acre site comprised of five contiguous parcels (APNs 025-0712-019-02, -017, -016, -015, and -014) with addresses 2700, 2712, 2720 International Boulevard, 1409 and 1415 Mitchell Street in Oakland, Alameda County, California 94601. The project proposes to construct 75 affordable apartments and approximately 3,800 square feet of ground floor commercial space. The unit mix will be 35 one-bedroom units, 21 two-bedroom units and 19 three-bedroom units for a total of 75 units. On-site resident amenities include a community room, shared laundry facilities, administrative offices and supportive services offices. A total of 33 parking spaces will be provided onsite in an enclosed garage on the ground floor located behind the commercial space. A total of 50 bicycle parking spaces will also be provided.

Demolition

Existing improvements to be demolished include a three-story commercial building constructed in 1969, a two-story mixed-use building constructed in 1960 and a surface parking lot.

Design

The new building will consist of five residential floors over first floor podium with commercial space, parking and services offices. Commercial spaces may have individual storefront entries with canopies, signage and lighting that allow each business to have an individual presence on International Boulevard. At the upper floors the residential buildings are organized around a shared courtyard space approximately 60 feet in width flanked by community rooms and common laundry space. The building steps down from six stories at International Boulevard to four and three stories and then finally to one story adjacent to neighborhood homes to create a strong transition from the commercial boulevard to the existing homes. The building form consists of strong vertical elements with rich patterning of brick and stucco that reflect the neighborhood context. Opportunities for local art are incorporated into the bulkheads at storefronts and into the raised planters on 27th Avenue and on Mitchell Street.

Circulation

Access to parking is provided from 27th Avenue consistent with the existing vehicle circulation pattern. A loading zone is provided on 27th to accommodate deliveries, passenger loading and residents' moving trucks. Waste will be collected within the garage and will be staged in the loading zone on 27th Avenue for pick up. All utility services are located either underground or enclosed within the building.

Funding

The project is publicly funded and will include Low-Income Housing Tax Credits (LIHTC) funding and California Tax Credit Allocation Committee (TCAC) minimum standards. The project is 100% affordable and will serve

households below 60 percent of Area Median Income (AMI). A total of 22 units will be reserved for formerly homeless veterans. The total project cost is estimated to be around $80,000,000.

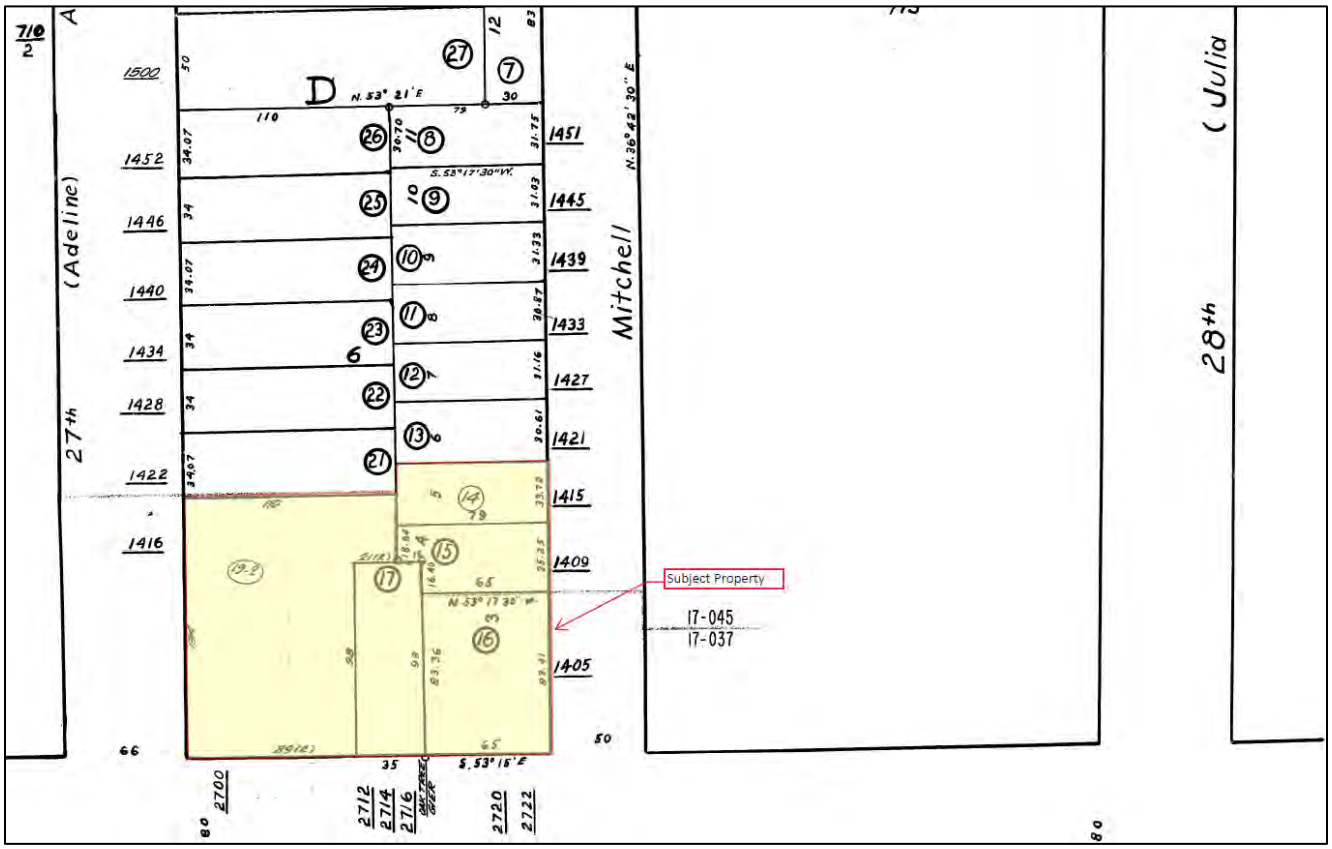

FIGURE 1 ASSESSOR PARCEL MAP

SHEET INDEX

A		FDN	FOUNDATION	PT	PRESSURE TREATED OR POST TENSIONED
AB	ANCHOR BOLT	FE	FIRE EXTINGUISHER		
ABV	ABOVE	FEC	FIRE EXTINGUISHER CABINET	PTD	PAINTED
A/C	AIR CONDITIONING	FF	FINISHED FLOOR	PLYWD, PLY	PLYWOOD
AC	ASPHALTIC CONCRETE	FIN	FINISH OR FINISHED	PREFAB	PREFABRICATED
ACC	ACCESSIBLE	FLEX	FLEXIBLE	PV	PHOTOVOLTAIC
A.C.P.	ACOUSTIC CEILING PANEL	FLR	FLOOR	PVC	POLYVINYL CHLORIDE (RIGID)
A.C.T.	ACOUSTIC CEILING TILE	F.O.B.	FACE OF BEAM	Q	
A.D.	AREA DRAIN	F.O.C.	FACE OF CONCRETE	QTY	QUANTITY
ADDL	ADDITIONAL	F.O.F.	FACE OF FINISH	R	
ADDM	ADDENDUM	F.O.S.	FACE OF STUD	R	RISER
ADH	ADHESIVE	F.O.W.	FACE OF WALL	RCP	REFLECTED CEILING PLAN
ADJ	ADJACENT OR ADJUSTABLE	FR	FIRE RESISTANCE	REF	REFER(ENCE) OR REFRIGERATOR
AFF	ABOVE FINISED FLOOR	FRTW	FIRE RETARDANT TREATED WOOD	REINF	REINFORCE(D) (ING) (MENT)
ALUM	ALUMINUM			REQ	REQUIRED
ALT	ALTERNATIVE	FRP	FIBER REINFORCED PLASTIC	RESIL	RESILIENT
AMT	AMOUNT	FT	FOOT	RFG	ROOFING
ANOD	ANODIZED	FTG	FOOTING	RM	ROOM
AP	ACCESS PANEL	G		RO	ROUGH OPENING
APL	ASSUMED PROPERTY LINE	GA	GUAGE	RWL	RAINWATER LEADER
APPROX	APPROXIMATE	GALV	GALVINIZED	S	
ARCH	ARCHITECT(URAL)	GAR	GARAGE	SAF	SELF-ADHERED FLASHING
ASSY	ASSEMBLY	GFCI	GROUND FAULT CIRCUIT INTERRUPTER	SC	SOLID CORE
A/V	AUDIO VISUAL	GLAZ	GLAZING	S.C.D.	SEE CIVIL DRAWINGS OR SEE CONCRETE DRAWINGS
AUTO	AUTOMATIC	GSM	GALVINIZED SHEET METAL		
B		GWB	GYPSUM WALL BOARD	SD	STORM DRAIN
BATT	BATTING	GYP	GYPSUM	SHV	SHELVES (ING)
BALC	BALCONY	H		SQ.IN	SQUARE INCH
BATT	BATTING	HB	HOSE BIB	S.S.D.	SEE STRUCTURAL DRAWINGS
BD	BOARD	HC	HOLLOW CORE	SECT	SECTION
BLDG	BUILDING	HD	HOLD-DOWN	S.E.D.	SEE ELECTRICAL DRAWINGS
BLKG	BLOCKING	HM	HOLLOW METAL	SF	SQUARE FOOT OR SUBFLOOR
BM	BEAM	HORIZ	HORIZONTAL	SG	SAFETY GLAZING
B.O.C.	BOTTOM OF CURB	H PLAM	HIGH PRESSURE LAMINATE	SIM	SIMILAR
B.O.D.	BASIS OF DESIGN	HR	HOUR OR HANDRAIL	S.L.D.	SEE LANDSCAPE DRAWINGS
BOT	BOTTOM	HSS	TUBE STEEL	SM	SHEET METAL
B.O.W.	BACK OF SIDEWALK	HT	HEIGHT	S.M.D.	SEE MECHANICAL DRAWINGS
BRKT	BRACKET	HVAC	HEATING, VENTILATION, AIR-CONDITIONING	SP	STANDPIPE
BTW, B/W	BETWEEN			S.P.D.	SEE PLUMBING DRAWINGS
BUR	BUILT UP ROOFING	HYD	HYDRANT	SPECS	SPECIFICATIONS
C		I		SQ	SQUARE
CAB	CABINET	IIC	IMPACT INSULATION CLASS	SS	STAINLESS STEEL OR SANITARY SEWER
CEM	CEMENT	IN	INCHES		
CEM PLAS	CEMENT PLASTER	INSUL	INSULATION	SSTL	STAINLESS STEEL
CIP	CAST IN PLACE	INT	INTERIOR	STC	SOUND TRANSMISSION CLASS
CJ	CONTROL JOINT	J		STD	STANDARD
CL	CENTERLINE	JAN	JANITOR	STL	STEEL
CL.	CLOSET	JT	JOINT	STOR	STORAGE
CLG	CEILING	K		STRUCT, STR'L	STRUCTURAL
CLKG	CAULKING	KD	KILN DRIED	SUSP	SUSPENDED
CLR	CLEAR	KIT	KITCHEN	SUSP CLG	SUSPENDED CEILING
CMU	CONCRETE MASONRY UNIT	KPL	KICK PLATE	SV	SHEET VINYL
COL	COLUMN	L		SYS	SYSTEM
CONC	CONCRETE	L	ANGLE	T	
CONN	CONNECTION	LAU	LAUNDRY	T	TEMPERED
CONT	CONTINUOUS	LAV	LAVATORY	T&G	TONGUE AND GROOVE
CONST	CONSTRUCTION	LIN	LINOLEUM	TDS	TIE DOWN SYSTEM
CONTR	CONTRACTOR	LVT	LUXURY VINYL TILE	TEL	TELEPHONE
CSMT	CASEMENT	LVL	LEVEL	TEMP	TEMPORARY OR TEMPERATURE
CT	CERAMIC TILE	M		TEMP GL	TEMPERED GLASS
CTSK	COUNTERSINK	MAX	MAXIMUM	THK	THICK(NESS)
D		MB	MACHINE BOLT	T.O.	TOP OF
D	DRYER	MC	MEDICINE CABINET	T.O.C.	TOP OF CONCRETE
DBL	DOUBLE	MECH	MECHANICAL	T.O.PL.	TOP OF PLATE
DEMO	DEMOLISH OR DEMOLITION	MTL	METAL	T.O.S.	TOP OF SLAB
DF	DOUGLAS FIR	MFR	MANUFACTURER	T.O.SF.	TOP OF SUBFLOOR
DIA	DIAMETER	MIN	MINIMUM	T.O.W.	TOP OF WALL
DIM	DIMENSION	MTD	MOUNTED	TPD	TOILET PAPER DISPENSER
DN	DOWN	N		TYP	TYPICAL
DS	DOWNSPOUT	N/A	NOT APPLICABLE	U	
DTL	DETAIL	NIC	NOT IN CONTRACT	UL	UNDERWRITER'S LABORATORY
DW	DISHWASHER	NTS	NOT TO SCALE	UON	UNLESS OTHERWISE NOTED
DWG	DRAWING	O		V	
E		O/	OVER	VCT	VINYL COMPOSITION TILE
(E)	EXISTING	OC	ON CENTER	VERT	VERTICAL
EA	EACH	OD	OUTSIDE DIAMETER	VEST	VESTIBULE
EB	EXPANSION BOLD	OFC	OFFICE	VGDF	VERTICAL GRAIN DOUGLAS FIR
EJ	EXPANSION JOINT	OFD	OVERFLOW DRAIN	VIF	VERIFY IN FIELD
ELEV	ELEVATION OR ELEVATOR	OH	OVERHEAD	W	
ELEC	ELECTRIC	OITC	OUTSIDE-INSIDE TRANSMISSION CLASS	W	WASHER
ENCL	ENCLOSURE, ENCLOSED			W/	WITH
EP	ELECTRIC PANEL	OPP	OPPOSITE	WC	WATER CLOSET
EQ	EQUAL	OPP HD, OPH	OPPOSITE HAND	W/D	STACKED WASHER AND DRYER
EQPT	EQUIPMENT	OPNG	OPENING	WD	WOOD
EXP	EXPANSION	P		WDW	WINDOW
EXT	EXTERIOR	PCC	PRECAST CONCRETE	WH	WATER HEATER
F		PERF	PERFORATED	W/O	WITHOUT
FACP	FAIRE ALARM CONTROL PANEL	PL.	PLATE	W.O.	WHERE OCCURS
FAU	FORCED AIR UNIT	P.L.	PROPERTY LINE	WP	WATERPROOF
FCB	FIBER CEMENT BOARD	PLAM	PLASTIC LAMINATE	WRB	WATER RESISTIVE BARRIER
FCP	FIBER CEMENT PANEL	PR	PAIR	WS	WHEELSTOP
FD	FLOOR DRAIN OR FIRE DEPARTMENT			WSCT	WAINSCOT
				WWF	WELDED WIRE FABRIC

GRAPHIC LEGEND

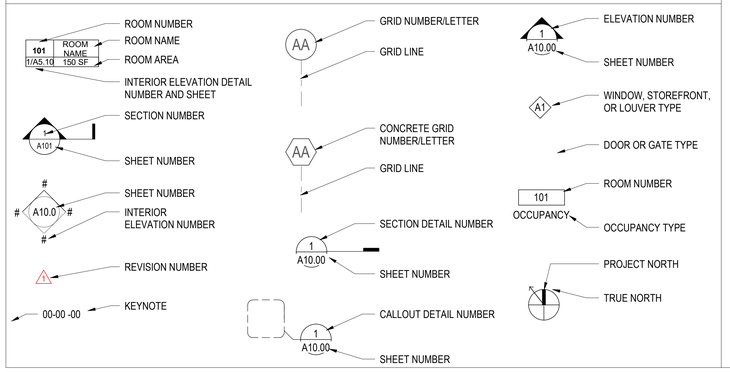

PROJECT TEAM

OWNER	ARCHITECT	STRUCTURAL ENGINEER
THE UNITY COUNCIL 1900 FRUITVALE AVE #2A OAKLAND, CA 94601 CONTACTS: AUBRA LEVINE - DIRECTOR PHONE: (510) 535-6112 EMAIL: alevine@unitycouncil.org	PYATOK ARCHITECTS, INC. 1611 TELEGRAPH AVE, SUITE 200 OAKLAND, CA 94612 CONTACTS: PETER WALLER, PRINCIPAL MIKKI ASADA, ARCHITECT PHONE: (510) 465-7010 EMAIL: pwaller@pyatok.com masada@pyatok.com	ELEMENT STRUCTURAL ENGINEER, INC. 39675 CEDAR BLVD, STE #295C, NEWARK, CA 94560 CONTACTS: THUY FONTELERA, PRINCIPAL PHONE: (510) 465-7010 EMAIL: tfontelera@elementse.com
LANDSCAPE ARCHITECT	**CIVIL ENGINEER**	**MEP ENGINEER**
PGA DESIGN 444 17TH STREET OAKLAND, CA 94612 CONTACTS: CHRIS KENT, PRINCIPAL PHONE: (510) 550-8851 EMAIL: kent@pgadesign.com	KISTER, SAVIO & REI 825 SAN PABLO AVE. PINOLE, CA 94564 CONTACTS: MATTHEW REI, PRESIDENT PHONE: (510) 222-4020 X25 EMAIL: matt@ksrinc.net	EMERALD CITY ENGINEERS, INC. 21705 HIGHWAY 99 LYNNWOOD, WA 98036 CONTACTS: MASSAMAGHAN KONE, ENGINEER TOM HUYNH, ELEC DESIGNER PHONE: (425) 741-1200 EMAIL: mkone@emeraldcityeng.com thuynh@emeraldcityeng.com
GPR & TITLE 24 CONSULTANT	**ACOUSTICAL ENGINEER**	**WATERPROOFING CONSULTANT**
BEYOND EFFICIENCY 710 CHANNING WAY BERKELEY, CA 94710 CONTACTS: JENNIFER LOVE PHONE: (415) 236-1333 EMAIL: jen@beyondefficiency.us	RGD ACOUSTICS, INC. 22 PELICAN WAY, SUITE 100 SAN RAFAEL, CA 94901 CONTACTS: HAROLD GOLDBERG, PRINCIPAL PHONE: (415) 464-0150 X313 EMAIL: hgoldberg@rgdacoustics.com	SGH 1999 HARRISON STREET, SUITE 2400 OAKLAND, CA 94612 CONTACTS: CHRIS DECAREAU, SENIOR CONSULTING ENGINEER PHONE: (415) 343-3010 EMAIL: cpdecareau@sgh.com
JOINT TRENCH	**WASTE CONSULTANT**	**LIGHTING CONSULTANT**
ALPINE DESIGN CORPORATION 3104 O STREET, #212 SACRAMENTO, CA 95816 CONTACTS: RUSSELL NORMAN PHONE: (916) 508-3462 EMAIL: russell@alpinedesigncorp.com	AMERICAN TRASH MANAGEMENT, INC. 1900 POWELL STREET, SUITE 220 EMERYVILLE, CA 94608 CONTACTS: SCOTT BROWN, PRESIDENT PHONE: (415) 292-5401 EMAIL: sbrown@trashmanage.com	MINISCULE LIGHTING 544 PACIFIC AVE SAN FRANCISCO, CA 94133 CONTACTS: MAX PIERSON-LIÉNARD, LC, LEED GA, PRINCIPAL PHONE: (415) 322-0629 EMAIL: max@minuscule.lighting
EBM CONSULTANT		
SCAFFOLD INSPECTION AND TESTING CO. 183A BEACON STREET SOUTH SAN FRANCISCO, CA 94080 CONTACTS: TERESA WU PHONE: (650) 588-4626 EMAIL: teresa@sit-co.com		

PROJECT DATA

APPLICABLE CODES:

2019 California Building Code (Based on the International Building Code, 2021 Edition with State amendments)
2019 California Residential Code (Based on the International Residential Code, 2021 Edition with State amendments)
2019 California Plumbing Code (Based on Uniform Plumbing Code, 2021 IAPMO Edition with State amendments)
2019 California Mechanical Code (Based on the Uniform Mechanical Code, 2021 IAPMO Edition with State amendments)
2019 California Electrical Code (Based on the National Electrical Code, 2021 Edition with State amendments)
2019 California Referenced Standards Code
2019 California Energy Code
2019 California Green Building Standards Code
City of Oakland Municipal Code (OMC)

Accessibility:
2019 CBC Chapter 11B
2010 ADA Standards for Accessible Design
Fair Housing Act Design Manual, 1998

CONSTRUCTION TYPE:
LEVEL 1: TYPE I-A
LEVELS 2-6: TYPE III-A

OVERALL BUILDING HEIGHT:
ALLOWABLE = 75 FT
PROPOSED = 69 FT

BUILDING STORIES:
ALLOWABLE = 7
PROPOSED = 6

SPRINKLERED
FULLY SPRINKLERED PER NFPA 13, 14, 72, 82 AND CBC CHAP 9

*UNCOVERED PODIUM EXTERIOR COURTYARD NOT INCLUDED IN AREA TABLE

TOTAL BUILDING AREA (CBC)

Level	Area
FLOOR AREA	
LEVEL 1	22,699 SF
LEVEL 2	16,297 SF*
LEVEL 3	16,740 SF
LEVEL 4	14,987 SF
LEVEL 5	14,020 SF
LEVEL 6	14,020 SF
	98,763 SF
COVERED EXTERIOR AREA	
LEVEL 1	323 SF
LEVEL 2	443 SF
	766 SF
TOTAL GSF (CBC)	99,529 SF

001_Building Areas per Occupancy

Level	Occupant Group	Area
BLDG 1		
LEVEL 1	B	6,362 SF
LEVEL 1	R-2	1,918 SF
LEVEL 1	S-2	14,093 SF
BLDG 1		22,373 SF

001_Building Areas per Occupancy

Level	Occupant Group	Area
BLDG 2		
LEVEL 2	A-3	1,939 SF
LEVEL 2	R-2	7,153 SF
LEVEL 2	S-2	128 SF
LEVEL 3	R-2	9,220 SF
LEVEL 4	R-2	7,467 SF
LEVEL 5	R-2	7,467 SF
LEVEL 6	R-2	7,203 SF
BLDG 2		40,577 SF

001_Building Areas per Occupancy

Level	Occupant Group	Area
BLDG 3		
LEVEL 2	R-2	7,688 SF
LEVEL 3	R-2	7,678 SF
LEVEL 4	R-2	7,678 SF
LEVEL 5	R-2	6,711 SF
LEVEL 6	R-2	6,711 SF
BLDG 3		36,466 SF
NO OCC LOAD		
LEVEL 1	R-2	188 SF
NO OCC LOAD		188 SF

UNIT MIX

LEVEL	STUDIO	1BR	2BR	3BR	TOTAL
1	-	-	-	-	-
2	0	7	6	3	16
3	0	7	6	4	17
4	0	7	3	4	14
5	0	7	3	4	14
6	0	7	3	4	14
TOTAL	0	35	21	19	75
% MIX	0%	47%	28%	25%	

ACCESSIBLE UNITS
AMOUNT AND DISTRIBUTION PER **ADAS + TCAC (CBC CHAPTER 11B & FHADM)** REQUIREMENTS
- 5% OF EACH TYPE OF UNIT TO MEET **ADAS.** (2) 1 BR, (2) 2 BR, (1) 3 BR REQUIRED FOR MFH.
- 15% MOBILITY (MIN) PER **TCAC.** (SEE COVERED UNIT CALCULATION BELOW)
- 10% COMMUNICATIONS (MIN) PER **TCAC.** (SEE COVERED UNIT CALCULATION BELOW)

MOBILITY ACCESSIBLE (TCAC): (5) ONE-BEDROOM, (5) TWO-BEDROOM, (5) THREE-BEDROOM — 75 MULTI-FAMILY UNITS (.15) = 12 TOTAL UNITS REQ'D

COMMUNICATIONS ACCESSIBLE (TCAC): (3) ONE-BEDROOM, (3) TWO-BEDROOM, (2) THREE-BEDROOM — 75 MULTI-FAMILY UNITS (.10) = 8 TOTAL UNITS REQ'D

NOTE:
1. ALL REMAINING UNITS TO BE ADAPTABLE IN ACCORDANCE WITH CBC CH. 11B

2700 INTERNATIONAL BOULEVARD

PERMIT SET - DECEMBER 09, 2022

PROJECT DESCRIPTION

2700 International is a 100% affordable housing project located on International Boulevard between 27th Avenue and Mitchell Street. The project is publicly funded and will include LIHTC funding and TCAC minimum standards. The project includes 75 affordable units including (35) 1 bedroom units, (21) 2 bedroom units, (19) 3 bedroom units, a community room, shared laundry, administrative offices and other support services. The ground floor includes approximately 7,000 SF of street front commercial space designed to allow subdivision into multiple tenant spaces. Onsite parking of 33 stalls is provided in an enclosed garage located behind the commercial space.

The existing site is occupied by two existing buildings that will be removed. 2700 International is a three story commercial office building located at the corner of International and 27th Avenue. The second building at 2712 International is two stories with occupied commercial space in the front and a vacated residential unit in the rear of the building. The remainder of the site is occupied driveways and approximately 45 existing onsite parking spaces. There is one existing juniper tree on site near the rear of the site.

The proposed building is six stories in height, consisting of five stories of residential units over a first floor podium accommodating the commercial space, parking and services. The main residential entry is located at the corner of International Boulevard with large storefront windows creating a transparent and welcoming entry for residents and visitors. On International Boulevard the entire building is set back a minimum of 2 feet to provide a wide sidewalk with more room for trees and pedestrians. Commercial spaces have individual storefront entries with canopies, signage and lighting that allow each business to have an individual presence on International Boulevard. At the upper floors the residential buildings are organized around a shared courtyard space approximately 60 feet in width flanked by community rooms and common laundry space. The building steps down from six stories at International Boulevard to four and three stories and then finally to one story adjacent to neighborhood homes to create a strong transition from the commercial boulevard to the existing homes. The building form consists of strong vertical elements with rich patterning of brick and stucco that reflect the neighborhood context. Opportunities for local art are incorporated into the bulkheads at storefronts and into the raised planters on 27th Avenue and on Mitchell Street.

Access to parking is provided from 27th Avenue consistent with the existing vehicle circulation pattern. A loading zone is provided on 27th to accommodate deliveries, passenger loading and residents moving. Waste is collected within the garage and will be staged in the loading zone on 27th Avenue for pick up. All utility services are located either underground or enclosed within the building.

PLANNING CODE SUMMARY

PROJECT ADDRESS: 2700 INTERNATIONAL BOULEVARD, OAKLAND, CA 94601
LOT SIZE: 26,778 SF (0.61 acres)
ASSESSORS PARCEL #: 025-0712-019-02, 025-0712-017, 025-0712-016, 025-0712-015, 025-0712-014
ZONING DISTRICT: CC-2 COMMUNITY COMMERCIAL ("RM-2 MIXED HOUSING - PARTIAL)
HEIGHT DISTRICT: 60'-0"

STANDARD	REQUIREMENT OR GUIDELINE	PROPOSED
USE	COMMERCIAL, RESIDENTIAL	COMMERCIAL, RESIDENTIAL
RESIDENTIAL DENSITY	MAXIMUM 375 SF OF LOT AREA PER UNIT 26,778 SF LOT AREA / 375 SF = 71 UNITS ALLOWED	75 UNITS (**DENSITY BONUS**)
NON-RESIDENTIAL FAR	3 MAXIMUM FAR	3,762 SF COMMERCIAL AREA / SITE AREA = 0.14 FAR
BUILDING HEIGHT	60' MAXIMUM HEIGHT MAXIMUM 5 STORIES	72'-8" MAXIMUM HEIGHT 6 STORIES (**DENSITY BONUS**)
OPEN SPACE	150 SF / UNIT x 75 UNITS = 11,250 SF REQUIRED	4,503 SF PROVIDED
FRONT SETBACK	0' MINIMUM, 10' MAXIMUM	2'
INTERIOR SIDE SETBACK	0' MINIMUM, 5' MINIMUM WHEN ADJACENT TO AN RM ZONE	2'
STREET SIDE SETBACK	27TH AVE: 10' MINIMUM	11' FOR 46%
	MITCHELL ST: 10' MINIMUM	5'-8" FOR 81%
REAR SETBACK	15' MINIMUM	1'-2"
TRANSITIONARY SETBACK	@ 15' FROM PROP LINE, 30' HEIGHT AND 45 DEG ANGLE	SEE EXISTING SITE PLAN AND SECTIONS
AUTOMOBILE PARKING	RESIDENTIAL: 0.5 SPACES PER UNIT = 38 SPACES REQ'D. COMMERCIAL: 1 STALL/600 SF= 8 SPACES REQ'D.	25 SPACES PROVIDED 8 SPACES PROVIDED (SEE BREAKDOWN BELOW)
BICYCLE PARKING	RESIDENTIAL LONG TERM: 1/4 UNITS = 19 SPACES RESIDENTIAL SHORT TERM: 1/20 UNITS = 4 SPACES COMMERCIAL LONG TERM = 2 SPACES COMMERCIAL SHORT TERM = 2 SPACES	38 PROVIDED 8 PROVIDED 2 PROVIDED 2 PROVIDED
SIGNAGE	0.5 SF AREA PER 1 SF OF LOT FRONTAGE, 200 SF MAX.	66.2 SF PROVIDED
WASTE MANAGEMENT	SOLID WASTE: 20 GALLONS/UNIT = 8.71 CY PER OMC 8.28.140 RECYCLING: 2 CUBIC FEET/UNIT = 6.5 CY	RESIDENTIAL: 4 CY(COMPACTED) PROVIDED COMMERCIAL: 96 G PROVIDED RESIDENTIAL: 4 CY (COMPACTED) RECYCLE, (3) 64 G ORGANIC COMMERCIAL: (2) 96 G RECYCLE, 64 G ORGANIC

BIKE PARKING CALCULATONS

	SOURCE	REQUIREMENT	CALCULATION	STALLS REQ'D	STALLS PROVIDED
COMMERICAL - LONG TERM	OMC 17.117.110	1 space / 12,000 sf (2 MIN)	3,762 SF/12000 SF	2	2
RESIDENTIAL - LONG TERM	OMC 17.117.090	1 space / 4 units	75 units/4	19	58
TOTAL LONG TERM SPACES					60
COMMERICAL - SHORT TERM	OMC 17.117.110	1 space / 5,000 sf (2 MIN)	3,762 SF/5000 SF	2	2
RESIDENTIAL - SHORT TERM	OMC 17.117.090	1 space / 20 units	75 units/20	4	8
TOTAL LONG TERM SPACES					10

PARKING CALCULATONS

	SOURCE	REQUIREMENT	CALCULATION	STALLS REQ'D	STALLS PROVIDED
COMMERICAL PARKING	OMC 17.116.080(A)	1 stall/600 sqft	3,762 SF/600 SF	6	3
RESIDENTIAL PARKING	OMC 17.116.110 (B)	1/2 Per affordable unit	75/2	38	30
TOTAL STALLS					33

PARKING STALL TYPE REQUIREMENTS

	SOURCE	REQUIREMENT	CALCULATION	STALLS REQ'D	STALLS PROVIDED
ACCESSIBLE	CBC 11B-208.2	26 to 50 stalls provided, 2 total	-	2	4
VAN	CBC 11B-208.2.4	6:01	-	1	1
EVCS (OR EV READY) Non-Residential	OMC 15.04.3.11.130	2-10 stalls provided, than 2	2	2	2
EVCS (OR EV READY) Residential	OMC 15.04.3.11.110	10% of total stalls	33(.10)	4	4
EV ACCESSIBLE	CBC 11B-228.3	IF 1 to 4 provided, then 0		0	0
EV Van	CBC 11B.228.3.2.1	IF 1 to 4 provided, then 1		1	1

PROGRAM AREA TOTALS

Use	Area
AMENITY	3,845 SF
CIRCULATION	15,743 SF
COMMERCIAL	3,776 SF
OFFICE	1,716 SF
PARKING	10,764 SF
RESIDENTIAL	59,891 SF
UTILITY/SERVICE	3,828 SF

DEVELOPMENT STANDARDS WAIVERS GRANTED

1. OFF-STREET PARKING
2. BUILDING HEIGHT
3. REQUIRED GROUP OPEN SPACE
4. STREET SIDE SETBACK
5. INTERIOR SIDE SETBACK
6. REAR SETBACK
7. TRANSITORY SETBACK
8. RESIDENTIAL OFF-STREET LOADING BERTH

DEFERRED OR PHASED / CONCURRENT SUBMITTALS

1. DEMOLITION PERMIT
2. EXCAVATION, SHORING, UNDERPINNING AND/OR EARTHWORK
3. UNDERGROUND FIRE, STANDPIPES, FIRE SPRINKLER
4. FIRE ALARM
5. ERRCS / DAS
6. EXTERIOR AND MONUMENT SIGNAGE
7. PARCEL SUBDIVISION / MAPPING
8. MANUFACTURED ITEMS:
   A. STAIRS
   B. ELEVATOR
   C. SOLAR PV
   D. SOLAR DHW
   E. HVAC EQUIPMENT

VICINITY MAP

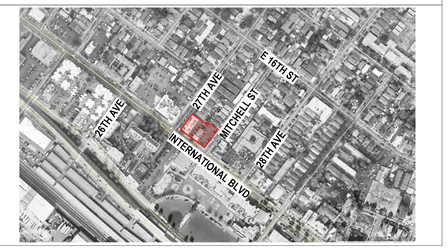

PYATOK
1611 TELEGRAPH AVE.
SUITE 200
OAKLAND, CA 94612
T. 510.465.7010 | F. 510.465.8575
www.pyatok.com

THE UNITY COUNCIL
1900 FRUITVALE AVE
#2A
OAKLAND, CA 94601

2700 INTERNATIONAL
OAKLAND, CA 94601

STAMP:
LICENSED ARCHITECT
PETER WALLER
C-23554
4/30/2023
STATE OF CALIFORNIA

ISSUE SCHEDULE

100 SD	5/11/22
50 DD	7/15/22
100 DD	9/16/22
50 CD	11/18/22
PERMIT SET	12/09/22

REVISION SCHEDULE

NO.	ISSUE	DATE

JOB NUMBER:	1937
DRAWN BY:	MA, DV, TN, MO, SP
CHECKED BY:	Checker
ISSUE DATE:	12/09/22
SCALE:	As indicated
TITLE:	**TITLE SHEET**

SHEET:
G0.00

PRELIMINARY - Not for Construction -

© 2019 PYATOK ARCHITECTURE & URBAN DESIGN

12/8/2022 6:19:24 PM

Sheet Number	Sheet Name	100% SD	50% DD	100% DD	50% CD - PRICING SET	PERMIT SET
GENERAL						
G0.00	TITLE SHEET	●	●	●	●	●
G0.01	DRAWING INDEX	●	●	●	●	●
G0.02	EXISTING CONDITIONS & SITE PHOTOS	●	●	●	●	●
G0.03	AERIALS	●	●	●	●	●
G0.04	PERSPECTIVES	●	●	●	●	●
G0.05	PERSPECTIVES	●	●	●	●	●
G0.10	CODE SUMMARY			●	●	●
G0.11	CODE DIAGRAMS - BUILDING HEIGHT AND AREA	●	●	●	●	●
G0.12	CODE DIAGRAM - FSD & OPENING PROTECTIONS	●	●	●	●	●
G0.13	CODE DIAGRAM - OCCUPANT LOAD	●	●	●	●	●
G0.14	CODE DIAGRAM -EXITING	●	●	●	●	●
G0.15	CODE DIAGRAM -FIRE ACCESS PLAN	●		●	●	●
G0.18	ZONING DIAGRAMS, SIGNAGE & OPEN SPACE	●	●	●	●	●
G0.31	CBC 2019 - ACCESSIBILITY - COMMON AREAS		●	●	●	●
G0.32	CBC 2019 - ACCESSIBILITY - COMMON AREAS		●	●	●	●
G0.33	CBC 2019 - ACCESSIBILITY - RESTROOMS		●	●	●	●
G0.34	CBC 2019 - ACCESSIBILITY - SIGNAGE		●	●	●	●
G0.35	CBC 2019 11B - ACCESSIBILITY - DWELLING UNITS		●	●	●	●
G0.36	CBC 2019 - ACCESSIBILITY - PARKING		●	●	●	●
G0.37	CBC 2019 - ACCESSIBILITY - ELEVATORS		●	●	●	●
G0.40	CONDITIONS OF APPROVAL		●	●	●	●
G0.41	CONDITIONS OF APPROVAL	●	●	●	●	●
G0.42	CONDITIONS OF APPROVAL	●	●	●	●	●
G0.43	CONDITIONS OF APPROVAL	●	●	●	●	●
G0.44	CONDITIONS OF APPROVAL	●	●	●	●	●
G0.45	CONDITIONS OF APPROVAL	●	●	●	●	●
G0.50	SUSTAINABILITY	●	●	●	●	●
G0.51	CA GREEN BUILDING STANDARDS					●
G0.52	CA GREEN BUILDING STANDARDS					●
G0.55	TITLE 24 REPORT				●	●
G0.56	TITLE 24 REPORT				●	●
G0.57	TITLE 24 REPORT				●	●
32						
CIVIL						
C0.00	CIVIL DEMOLITION PLAN					●
C0.01	BOUNDARY & TOPOGRAPHIC SURVEY	●	●	●	●	●
C1.00	CIVIL SITE & PUBLIC IMPROVEMENTS PLAN	●	●	●	●	●
C1.01	CIVIL SIGNAGE AND STRIPING PLAN				●	●
C2.00	CIVIL UTILITY PLAN	●	●	●	●	●
C2.01	CIVIL UTILITY PLAN				●	●
C3.00	GENERAL NOTES & CITY OF OAKLAND POLLUTION PREVENTION PLAN		●	●	●	●
C4.00	POST-CONSTRUCTION STORMWATER MANAGEMENT PLAN	●	●	●	●	●
C4.01	STORMWATER CONTROL DETAILS		●	●	●	●
C5.00	CITY OF OAKLAN STANDARD PLANS				●	●
C5.01	CITY OF OAKLAND/CALTRANS STANDARD PLANS					●
C6.00	EROSION CONTROL PLAN				●	●
C6.01	EROSION CONTROL PLAN DETAILS				●	●
13						
JOINT TRENCH						
JT0.1	PRELIMINARY JOINT TRENCH COMPOSITE		●	●	●	●
1						
LANDSCAPE						
L1.01	TREE PRESERVATION AND REMOVAL PLAN	●	●	●	●	●
L2.01	LANDSCAPE MATERIALS PLAN - LEVEL 1	●	●	●	●	●
L2.02	LANDSCAPE MATERIALS PLAN - LEVEL 2		●	●	●	●
L3.01	LANDSCAPE LAYOUT PLAN - LEVEL 1		●	●	●	●
L3.02	LANDSCAPE LAYOUT PLAN - LEVEL 2		●	●	●	●
L4.00	PLANTING NOTES, LEGEND, & SCHEDULE	●	●	●	●	●
L4.01	LANDSCAPE PLANTING PLAN - LEVEL 1	●	●	●	●	●
L4.02	LANDSCAPE PLANTING PLAN - LEVEL 2	●	●	●	●	●
L5.01	LANDSCAPE DETAILS - ON GRADE		●	●	●	●
L5.02	LANDSCAPE DETAILS - ON STRUCTURE - SHEET 1		●	●	●	●
L5.03	LANDSCAPE DETAILS - ON STRUCTURE - SHEET 2			●	●	●
L5.04	LANDSCAPE DETAILS - ON STRUCTURE - SHEET 3			●	●	●
L5.05	LANDSCAPE DETAILS - ON STRUCTURE - SHEET 4			●	●	●
L6.01	IRRIGATION PLAN - LEVEL 1				●	●
L6.02	IRRIGATION PLAN - LEVEL 2				●	●
L6.03	IRRIGATION LEGEND & DETAILS				●	●
16						
ARCHITECTURE						
A1.00	SITE PLAN - EXISTING	●	●	●	●	●
A1.01	SITE PLAN - PROPOSED	●	●	●	●	●
A2.01	BUILDING PLANS - LEVEL 1	●	●	●	●	●
A2.02	BUILDING PLANS - LEVEL 2	●	●	●	●	●
A2.03	BUILDING PLANS - LEVEL 3	●	●	●	●	●
A2.04	BUILDING PLANS - LEVEL 4	●	●	●	●	●
A2.05	BUILDING PLANS - LEVEL 5	●	●	●	●	●
A2.06	BUILDING PLANS - LEVEL 6	●	●	●	●	●
A2.07	BUILDING PLANS - ROOF	●	●	●	●	●
A2.21	SLAB PLANS - LEVEL 1	●	●	●	●	●
A2.22	SLAB PLANS - LEVEL 2		●	●	●	●
A2.31	ENLARGED SLAB PLANS			●	●	●
A2.32	ENLARGED SLAB PLANS			●	●	●
A3.00	COLOR ELEVATIONS	●	●	●	●	●
A3.01	COLOR ELEVATIONS	●	●	●	●	●
A3.02	COLOR ELEVATIONS	●	●	●	●	●
A3.03	ELEVATIONS		●	●	●	●
A3.04	ELEVATIONS		●	●	●	●
A3.05	ELEVATIONS		●	●	●	●
A3.06	PARTIAL ELEVATIONS		●	●	●	●
A3.10	ENLARGED BRICK ELEVATIONS		●	●	●	●
A3.20	BUILDING SECTIONS	●	●	●	●	●
A3.21	BUILDING SECTIONS			●	●	●
A3.22	BUILDING SECTIONS	●	●	●	●	●
A4.00	UNIT PLAN - GENERAL NOTES, INFO	●	●	●	●	●
A4.01	UNIT TYPE A1 - PLANS, ELEVATIONS, RCPS		●	●	●	●
A4.02	UNIT TYPE A1.2 - PLANS, ELEVATIONS, RCPS		●	●	●	●
A4.03	UNIT TYPE A2 - PLANS, ELEVATIONS, RCPS	●	●	●	●	●
A4.04	UNIT TYPE A3 - PLANS, ELEVATIONS, RCPS		●	●	●	●
A4.05	UNIT TYPE B1 - PLANS, ELEVATIONS, RCPS		●	●	●	●
A4.06	UNIT TYPE B2 - PLANS, ELEVATIONS, RCPS		●	●	●	●
A4.07	UNIT TYPE B3 - PLANS, ELEVATIONS, RCPS		●	●	●	●
A4.08	UNIT TYPE B4 - PLANS, ELEVATIONS, RCPS		●	●	●	●
A4.09	UNIT TYPE B5 - PLANS, ELEVATIONS, RCPS		●	●	●	●
A4.10	UNIT TYPE C1 - PLANS, ELEVATIONS, RCPS		●	●	●	●
A4.11	UNIT TYPE C2 - PLANS, ELEVATIONS, RCPS		●	●	●	●
A5.00	ENLARGED PLANS - COMMON AREAS LEVEL 1	●	●	●	●	●
A5.01	ENLARGED RCP - COMMON AREAS LEVEL 1		●	●	●	●
A5.02	INTERIOR ELEVATIONS - COMMON AREAS LEVEL 1		●	●	●	●
A5.03	INTERIOR ELEVATIONS - COMMON AREAS LEVEL 1		●	●	●	●
A5.05	ENLARGED PLANS & RCP - COMMON AREAS LEVEL 2		●	●	●	●
A5.06	INTERIOR ELEVATIONS - COMMON AREAS LEVEL 2		●	●	●	●
A6.01	BUILDING RCP - LEVEL 1	●	●	●	●	●
A6.02	BUILDING RCP - LEVEL 2		●	●	●	●
A6.03	BUILDING RCP - LEVEL 3		●	●	●	●
A6.04	BUILDING RCP - LEVEL 4		●	●	●	●
A6.05	BUILDING RCP - LEVEL 5		●	●	●	●
A6.06	BUILDING RCP - LEVEL 6		●	●	●	●
A7.00	STAIR 1 - PLANS & SECTIONS	●	●	●	●	●
A7.01	STAIR 2 - PLANS & SECTIONS	●	●	●	●	●
A7.21	STAIR DETAILS - METAL			●	●	●
A7.30	ELEVATOR - PLANS & SECTIONS		●	●	●	●
A7.50	WASTE TERMINATION - PLANS, SECTIONS		●	●	●	●
A8.00	WALL SECTIONS	●	●	●	●	●
A8.01	WALL SECTIONS		●	●	●	●
A8.02	WALL SECTIONS		●	●	●	●
A8.03	WALL SECTIONS		●	●	●	●
A8.04	WALL SECTIONS			●	●	●
A8.20	AT-GRADE/SLAB DETAILS		●	●	●	●
A8.21	AT-GRADE/SLAB DETAILS			●	●	●
A8.30	PODIUM SLAB DETAILS				●	●
A8.31	PODIUM SLAB DETAILS				●	●
A8.40	ENVELOPE DETAILS		●	●	●	●
A8.41	ENVELOPE DETAILS - BRICK		●	●	●	●
A8.43	ENVELOPE DETAILS - BREEZE BLOCKS				●	●
A8.70	ROOF DETAILS		●	●	●	●
A8.71	ROOF DETAILS			●	●	●
A8.72	AWNING DETAILS				●	●
A8.73	AWNING DETAILS				●	●
A9.00	WALL ASSEMBLIES - EXTERIOR	●	●	●	●	●
A9.01	WALL ASSEMBLIES - INTERIOR		●	●	●	●
A9.05	FLOOR AND ROOF ASSEMBLIES		●	●	●	●
A9.10	DOOR SCHEDULE	●	●	●	●	●
A9.11	DOOR SCHEDULE			●	●	●
A9.12	DOOR DETAILS				●	●
A9.20	WINDOW & LOUVER SCHEDULES			●	●	●
A9.21	WINDOW DETAILS			●	●	●
A9.25	LOUVER DETAILS				●	●
A9.30	STOREFRONT SCHEDULE		●	●	●	●
A9.31	STOREFRONT DETAILS			●	●	●
A9.60	FIRESTOPPING AND PENETRATION					●
A9.61	CORRIDOR AND OCCUPANCY SEPERATION DETAILS					●
A9.70	PRIMARY STRUCTURE FIRE PROTECTION				●	●
A10.00	FINISH SCHEDULE				●	●
A10.10	INTERIOR DETAILS			●	●	●
A10.30	SIGNAGE PLANS					●
86						
STRUCTURAL						
S1.00	STRUCTURAL TITLE SHEET		●	●	●	●
S1.01	GENERAL STRUCTURAL NOTES		●	●	●	●
S1.02	SPECIAL INSPECTION NOTES				●	●
S2.01	FOUNDATION PLAN	●	●	●	●	●
S2.02A	LEVEL 2 POST - TENSION PLAN		●	●	●	●
S2.02B	LEVEL 2 REINFORCEMENT PLAN		●	●	●	●
S2.02C	LEVEL 2 EMBEDMENT PLAN		●	●	●	●
S2.02D	BEARING WALL PLAN				●	●
S2.03	LEVEL 3 FLOOR FRAMING PLAN	●	●	●	●	●
S2.04	LEVEL 4 FLOOR FRAMING PLAN	●	●	●	●	●
S2.05	LEVEL 5 FLOOR FRAMING PLAN	●	●	●	●	●
S2.06	LEVEL 6 FLOOR FRAMING PLAN	●	●	●	●	●
S2.07	ROOF FRAMING PLAN		●	●	●	●
S3.01	ELEVATIONS				●	●
S3.02	ELEVATIONS				●	●
S3.03	MOMENT FRAME ELEVATIONS				●	●
S4.01	UNIT FLOOR FRAMING PLANS - UNIT A		●	●	●	●
S4.02	UNIT FLOOR FRAMING PLANS - UNIT B		●	●	●	●
S4.03	UNIT FLOOR FRAMING PLANS - UNIT C		●	●	●	●
S4.04	STAIR 1 FRAMING PLANS		●	●	●	●
S4.05	STAIR 2 FRAMING PLANS		●	●	●	●
S4.06	ELEVATOR FRAMING PLANS			●	●	●
S5.01	CONCRETE DETAILS		●	●	●	●
S5.02	CONCRETE DETAILS		●	●	●	●
S5.03	CONCRETE DETAILS		●	●	●	●
S5.04	CONCRETE DETAILS		●	●	●	●
S5.05	CONCRETE DETAILS		●	●	●	●
S5.06	CONCRETE DETAILS		●	●	●	●
S5.07	CONCRETE DETAILS		●	●	●	●
S5.08	CONCRETE DETAILS		●	●	●	●
S5.09	CONCRETE DETAILS				●	●
S5.10	CONCRETE DETAILS					●
S5.11	EARTHBOUND DETAILS					●
S5.12	EARTHBOUND DETAILS					●
S5.13	EARTHBOUND DETAILS					●
S5.14	EARTHBOUND DETAILS					●
S5.15	EARTHBOUND DETAILS					●
S5.16	EARTHBOUND DETAILS					●
S5.17	EARTHBOUND DETAILS					●
S7.01	STEEL DETAILS				●	●
S7.02	STEEL DETAILS				●	●
S7.03	STEEL DETAILS				●	●
S7.04	SIMPSON YIELD-LINK DETAILS				●	●
S8.01	WOOD DETAILS		●	●	●	●
S8.02	WOOD DETAILS		●	●	●	●
S8.03	WOOD DETAILS		●	●	●	●
S8.04	WOOD DETAILS		●	●	●	●
S8.05	WOOD DETAILS		●	●	●	●
S8.06	WOOD DETAILS		●	●	●	●
S8.07	WOOD DETAILS				●	●
S8.08	CFS HARDY PICTURE FRAME DETAILS				●	●
S8.09	CFS HARDY PICTURE FRAME DETAILS					●
S9.01	LIGHT GAUGE METAL DETAILS				●	●
S9.02	LIGHT GAUGE METAL DETAILS				●	●
54						
MECHANICAL						
M0.00	LEGEND, GENERAL NOTES, AND SHEET INDEX	●	●	●	●	●
M0.01	SCHEDULES		●	●	●	●
M0.02	NOTES				●	●
M2.01	BUILDING PLANS - LEVEL 1	●	●	●	●	●
M2.02	BUILDING PLANS - LEVEL 2	●	●	●	●	●
M2.03	BUILDING PLANS - LEVEL 3	●	●	●	●	●
M2.04	BUILDING PLANS - LEVEL 4	●	●	●	●	●
M2.05	BUILDING PLANS - LEVEL 5	●	●	●	●	●
M2.06	BUILDING PLANS - LEVEL 6	●	●	●	●	●
M2.07	BUILDING PLANS - ROOF	●	●	●	●	●
M3.00	ENLARGED UNIT PLANS	●	●	●	●	●
M3.01	ENLARGED UNIT PLANS	●	●	●	●	●
M3.02	ENLARGED UNIT PLANS	●	●	●	●	●
M4.00	DETAILS & DIAGRAMS		●	●	●	●
M4.01	DETAILS & DIAGRAMS		●	●	●	●
M4.02	DETAILS & DIAGRAMS		●	●	●	●
16						
PLUMBING						
P0.00	LEGEND, GENERAL NOTES, AND SHEET INDEX	●	●	●	●	●
P0.01	SCHEDULES			●	●	●
P0.02	CALCULATIONS			●	●	●
P1.00	SITE PLAN		●	●	●	●
P2.00	BUILDING PLANS - UNDERSLAB	●	●	●	●	●
P2.01	BUILDING PLANS - LEVEL 1	●	●	●	●	●
P2.02	BUILDING PLANS - LEVEL 2	●	●	●	●	●
P2.03	BUILDING PLANS - LEVEL 3	●	●	●	●	●
P2.04	BUILDING PLANS - LEVEL 4	●	●	●	●	●
P2.05	BUILDING PLANS - LEVEL 5	●	●	●	●	●
P2.06	BUILDING PLANS - LEVEL 6	●	●	●	●	●
P2.07	BUILDING PLANS - ROOF	●	●	●	●	●
P3.00	ENLARGED UNIT PLANS	●	●	●	●	●
P3.01	ENLARGED UNIT PLANS	●	●	●	●	●
P3.02	ENLARGED UNIT PLANS	●	●	●	●	●
P3.03	ENLARGED PLANS		●	●	●	●
P3.04	ENLARGED PLANS				●	●
P4.00	WASTE & VENT RISER DIAGRAMS		●	●	●	●
P4.01	WATER SUPPLY RISER DIAGRAMS		●	●	●	●
P4.02	DETAILS & DIAGRAMS		●	●	●	●
P4.03	DETAILS & DIAGRAMS		●	●	●	●
P4.04	DETAILS & DIAGRAMS		●	●	●	●
P4.05	DETAILS & DIAGRAMS				●	●
23						
ELECTRICAL						
E0.00	LEGEND,NOTES, AND SHEET INDEX	●	●	●	●	●
E0.01	LUMINAIRE SCHEDULE	●	●	●	●	●
E0.02	LUMINAIRE SCHEDULE				●	●
E2.01	BUILDING PLANS - LEVEL 1	●	●	●	●	●
E2.02	BUILDING PLANS - LEVEL 2	●	●	●	●	●
E2.03	BUILDING PLANS - LEVEL 3	●	●	●	●	●
E2.04	BUILDING PLANS - LEVEL 4	●	●	●	●	●
E2.05	BUILDING PLANS - LEVEL 5	●	●	●	●	●
E2.06	BUILDING PLANS - LEVEL 6	●	●	●	●	●
E2.07	BUILDING PLANS - ROOF	●	●	●	●	●
E3.01	POWER DETAILS	●	●	●	●	●
E3.02	POWER DETAILS	●	●	●	●	●
E4.01	UNIT PLANS	●	●	●	●	●
E4.02	UNIT PLANS	●	●	●	●	●
E4.03	UNIT PLANS	●	●	●	●	●
E5.01	ONELINE DIAGRAM	●	●	●	●	●
E5.02	ONELINE DIAGRAM	●	●	●	●	●
E5.03	LOAD CALCULATIONS	●	●	●	●	●
E5.04	LOAD CALCULATIONS	●	●	●	●	●
E5.05	PANEL SCHEDULES		●	●	●	●
E5.06	PANEL SCHEDULES		●	●	●	●
E5.07	PANEL SCHEDULES				●	●
E5.08	VOLTAGE DROP SCHEDULE				●	●
E6.01	LOW VOLTAGE DETAILS	●	●	●	●	●
E6.02	LOW VOLTAGE DETAILS	●	●	●	●	●
E6.03	DETAILS AND DIAGRAMS	●	●	●	●	●
E6.04	DETAILS AND DIAGRAMS	●	●	●	●	●
E6.05	DETAILS AND DIAGRAMS	●	●	●	●	●
E7.01	ENERGY CODE					●
E7.02	ENERGY CODE					●
E7.03	ENERGY CODE					●
E7.04	ENERGY CODE					●
E7.05	ENERGY CODE					●
E7.06	ENERGY CODE					●
34						
TRASH						
TR0.1	BUILDING PLANS - LEVEL 1			●	●	●
TR0.2	BUILDING PLANS - LEVEL 2			●	●	●
TR1.0	TRASH COLLECTION AREA			●	●	●
TR2.0	CHUTE DETAILS			●	●	●
4						
EXTERIOR BUILDING MAINTENANCE						
EBM1.0	EXTERIOR BUILDING MAINTENANCE				●	●
EBM1.1	EXTERIOR BUILDING MAINTENANCE				●	●
EBM1.2	EXTERIOR BUILDING MAINTENANCE				●	●
3						

TOTAL SHEETS: 282

12/8/2022 6:19:24 PM

PYATOK
1611 TELEGRAPH AVE.
SUITE 200
OAKLAND, CA 94612
T. 510.465.7010 | F. 510.465.8575
www.pyatok.com

THE UNITY COUNCIL
1900 FRUITVALE AVE
#2A
OAKLAND, CA 94601

2700 INTERNATIONAL

OAKLAND, CA 94601

STAMP:

ISSUE SCHEDULE

100 SD	5/11/22
50 DD	7/15/22
100 DD	9/16/22
50 CD	11/18/22
PERMIT SET	12/09/22

REVISION SCHEDULE

NO.	ISSUE	DATE

JOB NUMBER:	1937
DRAWN BY:	MA, DV, TN, MO, SP
CHECKED BY:	Checker
ISSUE DATE:	12/09/22
SCALE:	
TITLE:	**DRAWING INDEX**

SHEET:

G0.01

PRELIMINARY - Not for Construction -

© 2019 PYATOK ARCHITECTURE & URBAN DESIGN

SITE - ALONG 27TH AVE

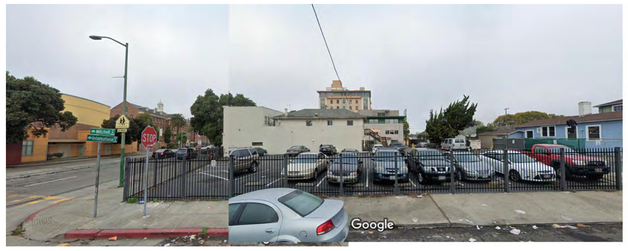

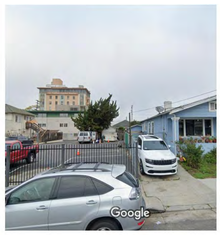

SITE - ALONG MITCHELL STREET

SITE - 2700 INTERNATIONAL BOULEVARD

#3 - 2825 INTERNATIONAL BOULEVARD

#2 - 2640 INTERNATIONAL BOULEVARD

#1 - 2619 & 2609 INTERNATIONAL BOULEVARD

#7 - 1421 & 1427 MITCHELL STREET

#6 - 1422 & 1428 MITCHELL STREET

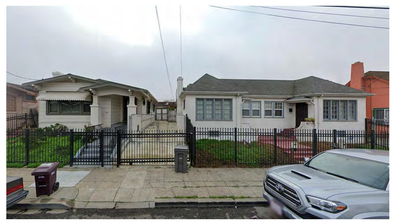

#5 - 1408, 1410 & 1416 MITCHELL ST

#11 - 2648 INTERNATIONAL BOULEVARD

#10 - 1433 & 1439 27TH AVE

#8 - 1422 & 1428 27TH AVE

#9 - 1432 & 1440 27TH AVE

#4 - 2750, 2758 & 2764 INTERNATIONAL BOULEVARD

CONTEXT PHOTO MAP

CONTEXT PHOTOS
1" = 1'-0" 1

12/8/2022 6:19:27 PM

PYATOK
1611 TELEGRAPH AVE.
SUITE 200
OAKLAND, CA 94612
T. 510.465.7010 | F. 510.465.8575
www.pyatok.com

THE UNITY COUNCIL
1900 FRUITVALE AVE
#2A
OAKLAND, CA 94601

2700 INTERNATIONAL
OAKLAND, CA 94601

STAMP:
LICENSED ARCHITECT
PETER WALLER
C-35551
4/30/2023
STATE OF CALIFORNIA

ISSUE SCHEDULE

100 SD	5/11/22
50 DD	7/15/22
100 DD	9/16/22
50 CD	11/18/22
PERMIT SET	12/09/22

REVISION SCHEDULE

NO.	ISSUE	DATE

JOB NUMBER:	1937
DRAWN BY:	MA, DV, TN, MO, SP
CHECKED BY:	Checker
ISSUE DATE:	12/09/22
SCALE:	1" = 1'-0"

TITLE:
EXISTING CONDITIONS & SITE PHOTOS

SHEET:
G0.02

PRELIMINARY - Not for Construction -

© 2019 PYATOK ARCHITECTURE & URBAN DESIGN

3D VIEW FROM SOUTHEAST (2)

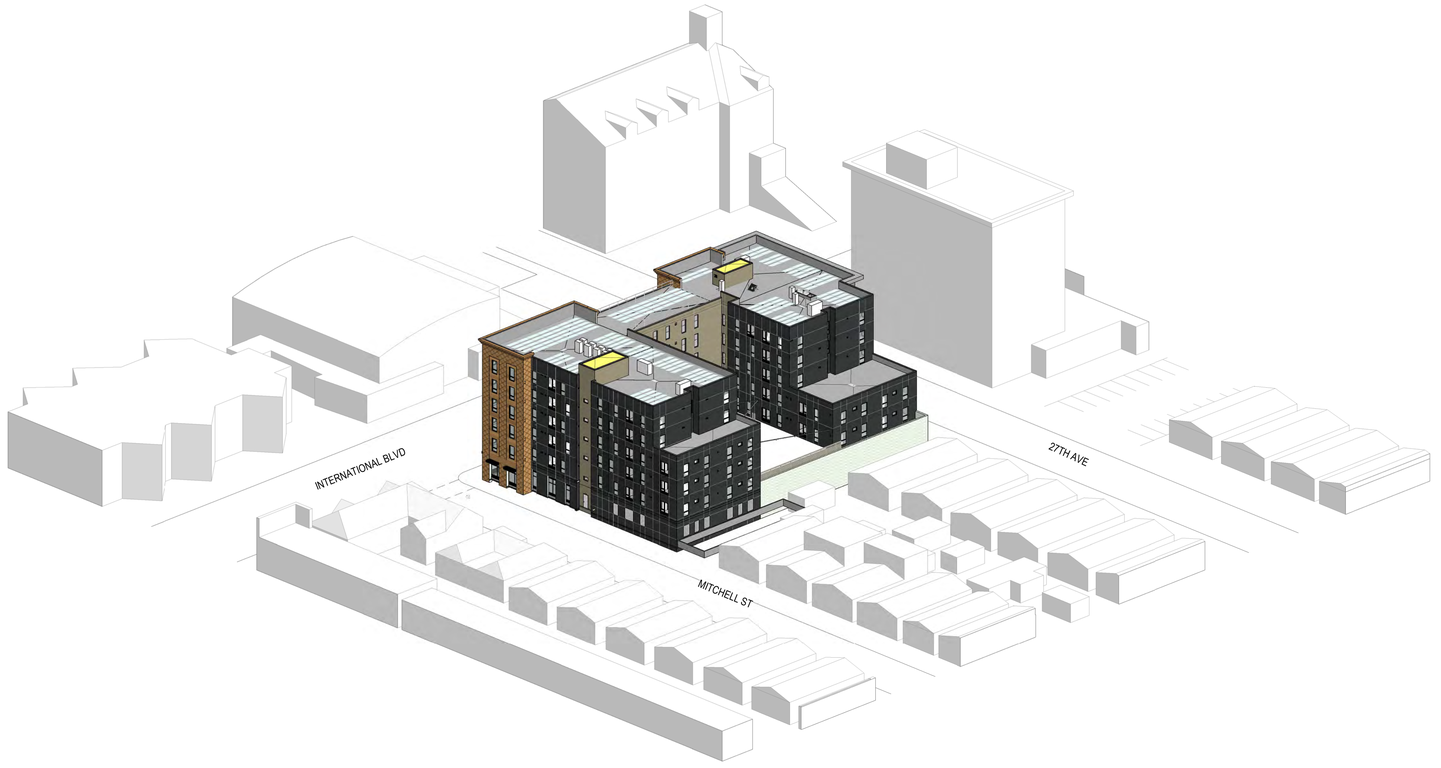

3D VIEW FROM NORTH EAST (1)

12/8/2022 6:20:20 PM

PYATOK
1611 TELEGRAPH AVE.
SUITE 200
OAKLAND, CA 94612
T. 510.465.7010 | F. 510.465.8575
www.pyatok.com

THE UNITY COUNCIL
1900 FRUITVALE AVE
#2A
OAKLAND, CA 94601

2700 INTERNATIONAL

OAKLAND, CA 94601

STAMP:

LICENSED ARCHITECT
PETER WALLER
C-33554
4/30/2023
STATE OF CALIFORNIA

ISSUE SCHEDULE

100 SD	5/11/22
50 DD	7/15/22
100 DD	9/16/22
50 CD	11/18/22
PERMIT SET	12/09/22

REVISION SCHEDULE

NO.	ISSUE	DATE

JOB NUMBER:	1937
DRAWN BY:	MA, DV, TN, MO, SP
CHECKED BY:	Checker
ISSUE DATE:	12/09/22
SCALE:	

TITLE:

AERIALS

SHEET:

G0.03

PRELIMINARY - Not for Construction -

© 2019 PYATOK ARCHITECTURE & URBAN DESIGN

PERSPECTIVE - CORNER INTERNATIONAL BLVD AND MITCHELL ST (1)
1" = 1'-0"

12/8/2022 6:20:23 PM

PYATOK
1611 TELEGRAPH AVE.
SUITE 200
OAKLAND, CA 94612
T. 510.465.7010 | F. 510.465.8575
www.pyatok.com

THE UNITY COUNCIL
1900 FRUITVALE AVE
#2A
OAKLAND, CA 94601

2700 INTERNATIONAL

OAKLAND, CA 94601

STAMP:

LICENSED ARCHITECT
PETER WALLER
C-23557
RENEWAL: 4/30/2023
STATE OF CALIFORNIA

ISSUE SCHEDULE

100 SD	5/11/22
50 DD	7/15/22
100 DD	9/16/22
50 CD	11/18/22
PERMIT SET	12/09/22

REVISION SCHEDULE

NO.	ISSUE	DATE

JOB NUMBER:	1937
DRAWN BY:	MA, DV, TN, MO, SP
CHECKED BY:	Checker
ISSUE DATE:	12/09/22
SCALE:	1" = 1'-0"

TITLE:
PERSPECTIVES

SHEET:
G0.04

PRELIMINARY - Not for Construction -

© 2019 PYATOK ARCHITECTURE & URBAN DESIGN

PERSPECTIVE - RESIDENTIAL LOBBY 4
1" = 1'-0"

PERSPECTIVE - CORNER INTERNATIONAL BLVD AND 27TH AVE 2
1" = 1'-0"

PERSPECTIVE - ART MOSAICS 3
1" = 1'-0"

PERSPECTIVE - COMMERCIAL ENTRY 1
1" = 1'-0"

12/8/2022 6:20:25 PM

PYATOK
1611 TELEGRAPH AVE.
SUITE 200
OAKLAND, CA 94612
T. 510.465.7010 | F. 510.465.8575
www.pyatok.com

THE UNITY COUNCIL
1900 FRUITVALE AVE
#2A
OAKLAND, CA 94601

2700 INTERNATIONAL
OAKLAND, CA 94601

STAMP:
LICENSED ARCHITECT
PETER WALLER
C-23554
4/30/2023
STATE OF CALIFORNIA

ISSUE SCHEDULE

100 SD	5/11/22
50 DD	7/15/22
100 DD	9/16/22
50 CD	11/18/22
PERMIT SET	12/09/22

REVISION SCHEDULE

NO.	ISSUE	DATE

JOB NUMBER:	1937
DRAWN BY:	MA, DV, TN, MO, SP
CHECKED BY:	Checker
ISSUE DATE:	12/09/22
SCALE:	1" = 1'-0"

TITLE:
PERSPECTIVES

SHEET:
G0.05

PRELIMINARY - Not for Construction -

© 2019 PYATOK ARCHITECTURE & URBAN DESIGN

PROJECT CODE SUMMARY

For code review purposes, the project is comprised of two **Type III-A wood framed buildings (Buildings 2 & 3) separated by a fire wall, over 1 story Type I-A mixed occupancy podium (Building 1). Each building is sprinklered throughout (NFPA 13)** .

Building 1 (Level 1) **R-2 (Residential), S-2 (Storage), B (Business)**
Building 2 (Level 2-6) **R-2 (Residential), A-3 (Assembly)**
Building 3 (Level 2-6) **R-2 (Residential)**

The following is a summary of the primary codes related to the project. Code references are provided in paraphrased form.

Applicable Codes:

- 2019 California Building Code "CBC" (HCD, Building, Mechanical, Electrical, Plumbing, Fire, Energy and Green Building Codes). CBC Chapter 11B
- Oakland Amendments to the above model codes per Chapter 15.04
- EBMUD and Alameda County Stormwater Management Requirements
- Fair Housing Act Design Manual (FHA requirements 3 - 7) with ANSI A117.1-2003 (FHA requirements 1 & 2) as "Safe Harbor"
- 2010 ADA Standards for Accessible Design

CHAPTER 3 - USE AND OCCUPANCY CLASSIFICATION

CBC 303 ASSEMBLY GROUP A (A-3: Community Room)
303.1.2 SMALL ASSEMBLY SPACES: A room or space used for assembly purposes with an occupant load of less than 50 persons and accessory to another occupancy shall be classified as a Group B occupancy or as part of that occupancy.
CBC 304 BUSINESS GROUP B (Office)
CBC 310 RESIDENTIAL GROUP R-2 (Dwelling Units, Lobby, Laundry)
Residential occupancies containing more than two dwelling units where the occupants are primarily permanent in nature
CBC 311 STORAGE GROUP S-2 (Mechanical/Electrical, Storage, Bike Room, Garage)
311.1.1 ACCESSORY STORAGE SPACES: A room or space used for storage purposes that is less than 100 square feet in area and accessory to another occupancy shall be classified as part of that occupancy.

CHAPTER 4 - SPECIAL DETAILED REQUIREMENTS BASED ON USE AND OCCUPANCY

SECTION 406.4 ENCLOSED PARKING GARAGES
Enclosed parking garages shall comply with Sections 406.2, 406.4 and 406.

SECTION 420.2 SEPARATION WALLS
Demising walls separating units have 1 hr. construction as fire partitions in accordance with Section 708.

SECTION 420.4 AUTOMATIC SPRINKLER SYSTEM
Group R occupancies are equipped throughout with an automatic sprinkler system in accordance with Section 903.2.8.

SECTION 420.5 FIRE ALARM SYSTEMS AND SMOKE ALARMS
Fire alarm systems and smoke alarms are provided in Group R-2 occupancies in accordance with Sections 907.2.8, 907.2.9 and 907.2.10, respectively. Single or multiple-station smoke alarms shall be provided in Groups R-2 in accordance with Section 907.2.10.

SECTION 420.11 [HCD 1] CONSTRUCTION WASTE MANAGEMENT
Recycle and/or salvage for reuse a minimum of 65 percent of the nonhazardous construction and demolition waste in accordance with the California Green Building Standards Code (CALGreen), Chapter 4, Division 4.4.

SECTION 420.13 [HCD 1] ELECTRIC VEHICLE (EV) CHARGING FOR NEW CONSTRUCTION
The building has the infrastructure for future installation and use of EV chargers per CALGreen requirements

CHAPTER 5 - GENERAL BUILDING HEIGHTS AND AREAS

See **Sheet G0.11** for "Building Height & Area" diagrams & **Sheet G0.13** for "Code Diagram - Exiting/ Path of Travel & Fire Access" diagrams

SECTION 502.1 BUILDING ADDRESS IDENTIFICATION
The building is provided with address identification, to be approved as a deferred submittal for SIGNAGE. The address identification shall be legible and placed in a position that is visible from the street or road fronting the property. Address identification characters shall contrast with their background. Address numbers shall be Arabic numbers or alphabetical letters. Numbers shall not be spelled out. Each character shall be a minimum of 4 inches high with a minimum stroke width of 1/2 inch.

SECTION 504.1, 504.3, 504.4 BUILDING HEIGHT AND NUMBER OF STORIES
See G0.11 for Building Height and number of stories.

SECTION 504.2 MIXED OCCUPANCY
In a building containing mixed occupancies in accordance with Section 508, no individual occupancy shall exceed the height and number of story limits specified in this section for the applicable occupancies.

SECTION 506.1, 506.2, 506.3 BUILDING AREA
The building area in each story and overall does not exceed the tabular values (Table 506.2) or calculated values per Equations 5-1 and 5-2 and 5-3. See calculations on G0.11. The project is divided into 3 separate buildings by horizontal assembly and fire walls.

SECTION 508.1 MIXED USE AND OCCUPANCY
Each portion of a building shall be individually classified in accordance with Section 302.1. Where a building contains more than one occupancy group, the building or portion thereof shall comply with the applicable provisions of Section 508.2, 508.3 or 508.4, or a combination of these sections.
Building 1 is mixed use, non-separated occupancies. Building 2 is mixed use with nonseparated occupancies at Level 2 and separated occupancies at Levels 3-6. Building 3 is single occupancy.

SECTION 508.2 ACCESSORY OCCUPANCIES
Accessory occupancies shall be individually classified in accordance with Section 302.1 and shall not occupy more than 10 percent of the floor area of the story in which they are located and shall not exceed the tabular values for nonsprinklered buildings in Table 506.2 for each such accessory occupancy. No separation is required between accessory occupancies and the main occupancy.

SECTION 508.3 NONSEPARATED OCCUPANCIES
Nonseparated occupancies shall be individually classified in accordance with Section 302.1.
- No fire separation required between Nonseparated occupancies.

SECTION 509.1 INCIDENTAL USES
- No fire separation required at Laundry Room due to automatic sprinkler system. Provide smoke separation at Laundry Room per CBC 509.4.2
- The Mechanical Equipment room is equipped with an automatic sprinkler system and therefore no fire separation is required. Smoke separation is provided.

CHAPTER 6 - TYPE OF CONSTRUCTION

TABLE 601: FIRE-RESISTANCE RATING REQUIREMENTS FOR BUILDING ELEMENTS

	TYPE I-A	TYPE III-A
Primary structural frame	3 HR (a,b)	1 HR (b)
Bearing walls exterior	3 HR	2 Hr
Bearing walls interior	3 HR	1 Hr
Nonbearing exterior walls and partitions	Table 602	Table 602
Nonbearing interior walls and partitions	0 HR	0 HR
Floor construction	2 HR	1 HR
Roof construction	1.5 HR (b)	1 HR (b,c)

Note
(a) Roof supports: Fire-resistance ratings of primary structural frame and bearing walls are permitted to be reduced by 1 hour where supporting a roof only.
(b) For Group A, E, I, L, R-1, R-2, and R-2.1 occupancies, high-rise buildings, and other applications listed in Section 1.11 regulated by the Office of the State Fire Marshal, fire protection of members other than the primary structural frame shall not be required, including protection of roof framing and decking where every part of the roof construction is 20 feet or more above any floor immediately below. Fire-retardant-treated wood members shall be allowed to be used for such unprotected members.
(c) In all occupancies, heavy timber complying with Section 2304.11 shall be allowed where a 1-hour or less fire-resistance rating is required.

All exterior wood framed walls are considered structurally as bearing walls in project, thus in Type III-A Building 2 and Building 3 exterior wood walls are 2hr.

TABLE 602: FIRE-RESISTANCE RATING REQUIREMENTS FOR EXTERIOR WALLS BASED ON FIRE SEPARATION DISTANCE (OCCUPANCIES A, B, R, S-2)

- *Fire separation distance less than 5' — 1 hour*
- *Fire separation distance between 5' ≤ x < 10' — 1 hour*
- *Fire separation distance between 10' ≤ x < 30' — 1 hour*
- *Fire separation distance above 30' — 0 hour*

SECTION 602.3 TYPE III
Exterior walls are of noncombustible materials. Fire-retardant-treated wood framing and sheathing complying with Section 2303.2 shall be permitted within exterior wall assemblies of a 2-hour rating or less.

CHAPTER 7 - FIRE AND SMOKE PROTECTION FEATURES

SECTION 703.6 FIRE-RESISTANCE-RATED GLAZING
When required, provide fire-resistance-rated glazing, tested in accordance with ASTM E119 or UL 263 and complying with the requirements of Section 707. Fire-resistance-rated glazing shall bear a label marked in accordance with Table 716.1(1) issued by an agency and shall be permanently identified on the glazing.

SECTION 704.2 COLUMN PROTECTION
Except when fully within a fire-resistive membrane that complies with 704.4.1, provide individual encasement protection of a column where required by protecting it on all sides for the full column height, including connections to other structural members, with materials having the required fire-resistance rating. Where the column extends through a ceiling, the encasement protection shall be continuous from the top of the foundation or floor/ceiling assembly below through the ceiling space to the top of the column.

SECTION 704.3 PROTECTION OF THE PRIMARY STRUCTURAL FRAME OTHER THAN COLUMNS
Members of the primary structural frame other than columns that are required to have protection to achieve a fire-resistance rating and support more than two floors or one floor and roof, or support a load-bearing wall or a nonload-bearing wall more than two stories high, shall be provided individual encasement protection by protecting them on all sides for the full length, including connections to other structural members, with materials having the required fire-resistance rating.

SECTION 704.4 PROTECTION OF SECONDARY MEMBERS
Secondary members that are required to have protection to achieve a fire resistance rating shall be protected by individual encasement protection. When the members are integral elements in the walls or horizontal assemblies and located entirely between the top & bottom plates or tracks have fire-resistance ratings provided by the membrane protection of the wall or horizontal assembly and do not require individual encasement or protection.

SECTION 705.3: BUILDINGS ON THE SAME LOT
For the purposes of determining the required wall and opening protection, projections and roof-covering requirements, buildings on the same lot shall be assumed to have an imaginary line between them. See G0.12

TABLE 705.8: MAXIMUM AREA OF EXTERIOR WALL OPENINGS

Fire Separation Distance	Location	Degree of Protection	Allowable Area
0' to less than 3'	Imagined Property Line	Unprotected, Sprinklered	0%
3' to less than 5'	Imagined Property Line	Unprotected, Sprinklered	15%
5' to less than 10'	Imagined Property Line @Interior lot line	Unprotected, Sprinklered	25%
10' to less than 15'	Imagined Property Line	Unprotected, Sprinklered	45%
20' to less than 30'	Mitchell Street Imagined Property Line @Interior lot line	Unprotected, Sprinklered	No Limit
30' or greater	27th Ave International Blvd	Unprotected, Sprinklered	No Limit

SECTION 705.11.1: PARAPET CONSTRUCTION
Parapets shall have the same fire-resistance rating as that required for the supporting wall, and on any side adjacent to a roof surface, shall have non-combustible faces for the uppermost 18 inches, including counterflashing and coping materials. The height of the parapet shall not be less than 30 inches above the point where the roof surface and the wall intersect.

SECTION 706.1: FIRE WALLS
Each portion of a building separated by one or more fire walls shall be considered a separate building. Fire walls shall have sufficient structural stability under fire conditions to allow collapse of construction on either side without collapse of the fire wall per Section 706.2.

SECTION 706.5: HORIZONTAL CONTINUITY
Fire walls shall be continuous from exterior wall to exterior wall and may terminate at the interior surface of the exterior sheathing if: (1.) The sheathing is combustible the exterior wall must have a fire-resistance rating of at least 1 HR for a horizontal distance of 4 ft. and openings within that 4 ft. section must have a fire protection rating of not less than ¾ HR. (2.) The sheathing, siding or other exterior finishes are noncombustible and extend horizontally for 4 ft on both sides of the fire wall. (3) The sheathing is noncombustible and the building on either side of the fire wall is protected by an automatic sprinkler system.

SECTION 706.5.1: EXTERIOR WALLS
Where the fire wall intersects exterior walls, the fire-resistance rating and opening protection of the exterior walls shall comply with one of the following: (1) 4' of the exterior walls on both sides of fire wall shall have 1 hr rating with 3/4 hr protection or (2) Buildings or spaces on both sides of the intersecting fire wall shall assume to have an imaginary lot line at the fire wall and extending beyond the exterior of the fire wall. The location of the assumed line in relation to the exterior walls and the fire wall shall be such that the exterior wall and opening protection meet the requirements set forth in Sections 705.5 and 705.8.

SECTION 706.6: VERTICAL CONTINUITY
Fire walls shall extend from the foundation to a termination point at least 30 in above both adjacent roofs. (Exception 4:) In buildings of Type III, IV, and V construction, walls shall be permitted to terminate at the underside of combustible roof sheathing or decks, provided: (4.1) There are no openings in the roof within 4 feet of the fire wall, (4.2) The roof is covered with minimum Class B roof covering, and (4.3) The roof sheathing or deck is constructed of fire-retardant-treated wood for a distance of 4 feet on both sides of the wall or the roof is protected with 5/8" Type 'X' gypsum board directly beneath the underside of the roof sheathing or deck.

SECTION 707.4 and 708.5: EXTERIOR WALLS
Where exterior walls serve as a part of a required fire-resistance rated shaft, stairway or ramp enclosure, such walls shall comply with the requirements for Section 705 for exterior walls and fire-resistance rated enclosure or separation requirements shall not apply, except for exterior exit stairways per CBC 1027.6.

SECTION 708: FIRE PARTITIONS
Fire partitions (i.e. corridor walls as required by Section 1020.1, and walls separating dwelling units as required by Section 420.2) shall have a fire-resistance rating of not less than 1 hour per Section 708.3.

SECTION 710: SMOKE PARTITIONS
Smoke partitions are not required to have a fire-resistance rating per CBC 710.3, unless required elsewhere, and shall be continuous from the floor to the underside of the floor above to limit the transfer of smoke.

SECTION 711.2 - 711.2.2: HORIZONTAL ASSEMBLIES
Assemblies shall be of materials permitted by the building type of construction and shall be continuous without vertical openings, except as permitted by Section 711 and 712.

SECTION 713.13: REFUSE/TRASH CHUTES AND TERMINATION ROOMS
Trash Chute openings shall not be located in corridors (Section 713.13.1). Trash Chute Access Rooms shall be 1-Hr rated with 3/4 -hr protected openings and self-closing doors (Section 713.13.3). Provide sprinkler heads at the tops of trash chutes and at the termination rooms and FSD at chute bottom. Trash chutes that are three stories or more shall also have additional sprinkler heads on alternate floors (Section 903.2.11.2).

SECTION 713.4: FIRE-RESISTANCE RATING OF SHAFT ENCLOSURE
Shaft enclosures shall have a fire-resistance rating of not less than 2 hours where connecting four stories or more (Elevators, Stairs, Trash chute/exhaust, corridor ventilation supply) and not less than 1 hour where connecting less than four stories. Shaft enclosures shall have a fire-resistance rating not less than the floor assembly penetrated, but need not exceed 2 hours.

- *The exterior walls of the stair enclosures are rated per the requirements of Section 705 for exterior walls (typically 1-hr.) per CBC 713.6 Exception.*
- *The top of all shafts are enclosed per CBC 713.12*

SECTION 714: PENETRATIONS
Vertical and horizontal penetrations are protected with a fire-stop system, filling of annular spaces or solid fireblocking. Through penetrations and membrane penetrations are limited by the provisions of CBC 714.4, 714.5 and 714.6.

TABLE 716.1: OPENING FIRE PROTECTION ASSEMBLIES, RATINGS AND MARKINGS
<u>Fire walls and fire barriers having a req'd fire-resistance greater than 1 hr</u>
Wall rating = 3 hr, Fire door rating = 3 hr, Door Vision Panel = note b
Wall rating = 2 hr, Fire door rating = 1.5 hr, Door Vision Panel = 100 sq.in.

<u>Enclosures for shafts, interior exit stairways and interior exit ramps</u>
Wall rating = 2 hr, Fire door rating = 1 1/2 hr, Door Vision Panel = 100 sq.in.

<u>Enclosures for shafts, exit access stairways, exit access ramps, interior exit stairways and interior exit ramps; and exit passageway walls</u>
Wall rating = 1 hr, Fire door rating = 1 hr, Door Vision Panel = 100 sq.in.

<u>Fire partitions: Corridor walls</u>
Wall rating = 1 hr, Fire door rating = 1/3 hr, Door Vision Panel = max. size tested

<u>Other fire partitions</u>
Wall rating = 1 hr, Fire door rating = 3/4 hr, Door Vision Panel = max. size tested
Wall rating = 1/2 hr, Fire door rating = 1/3 hr, Door Vision Panel = max. size tested

<u>Exterior walls</u>
Wall rating = 2 hr, Fire door rating = 1 1/2 hr, Door Vision Panel = max. size tested
Wall rating = 1 hr, Fire door rating = 1/3 hr, Door Vision Panel = max. size tested

<u>Smoke barriers</u>
Wall rating = 1 hr, Fire door rating = 1/3 hr, Door Vision Panel = max. size tested

TABLE 716.1(3) FIRE WINDOW ASSEMBLY FIRE PROTECTION RATINGS

- At Incidental use areas (Laundry Room, Level 2) with 1-hr fire-resistant wall construction, the minimum fire window assembly rating required is 3/4 hr (45 minutes) and is marked as OH-45 or W-60.
- At smoke barriers (at nonseparated mixed occupancies on Level 1) with 1-hr fire-resistant construction, the minimum fire window assembly rating required is 3/4 hr (45 minutes) and is marked as OH-45 or W-60.
- At exterior walls with 2-hr fire-resistant construction, the minimum fire window assembly rating required is 1.5 hr (90 minutes) and is marked as OH-90.

Per CBC 716.3.2.1.2, where 3/4 hr-rated windows are permitted, the total area of the glazing in fire-protection-rated window assemblies shall not exceed 25% of the area of a common wall with any room.

SECTION 717 DUCTS AND AIR TRANSFER OPENINGS
Section 717.1. Ducts transitioning horizontally between shafts shall not require a shaft enclosure if dampers are provided.

Fire dampers are not required at penetrations of shafts when the penetrations are in parking garage exhaust or supply shafts that are separated from other building shafts by not less than 2-hr fire-resistance rated construction per 717.5.3. Exception 1.4. Smoke dampers are similarly not required per CBC 717.5.3 Exception 3.

<u>At unit kitchen exhausts</u>
Per 717.5.3 Exception 2, in Group R occupancies equipped throughout with an automatic sprinkler system, smoke dampers are not required at penetrations of shafts when all of the following requirements are met:
1. Kitchen exhaust openings are installed with steel exhaust subducts of minimum 26 GA.
2. Subducts extend not less than 22 inches vertically
3. An exhaust fan is installed at the upper terminus of the shaft that is powered continuously in accordance with CBC 909.11 to maintain continuous upward airflow to the outside.

Per 717.5.3 Exception 4, fire and combination fire/smoke dampers are not required in kitchen and clothes dryer exhaust systems when dampers are prohibited by the California Mechanical Code.

SECTION 718 CONCEALED SPACES
Fireblocking and draft stopping shall be installed in combustible concealed locations per CBC 718, every 10 ft. both horizontally and vertically and at floor levels.

SECTION 720 THERMAL- AND SOUND-INSULATING MATERIALS
Per CBC 720.2, 720.3, and 720.7, insulating materials shall have a flame spread index of not more than 25 and a smoke-developed index of not more than 450. These limitations do not apply to facings, coverings and layers of reflective foil insulation per 720.2.1.Pipe insulation installed in plenums shall comply with the California Mechanical Code.

CHAPTER 8 - INTERIOR FINISHES

TABLE 803.13: INTERIOR WALL AND CEILING FINISH REQUIREMENTS BY OCCUPANCY
R-2 AND S-2, SPRINKLERED
Interior exit stairways, interior exit ramps and exit passageways = Class C
Corridors and enclosure for exit access stairways = Class C
Rooms and enclosed spaces = Class C
B, SPRINKLERED
Interior exit stairways, interior exit ramps and exit passageways = Class B
Corridors and enclosure for exit access stairways = Class C
Rooms and enclosed spaces = Class C
A-3, SPRINKLERED
Interior exit stairways, interior exit ramps and exit passageways = Class B
Corridors and enclosure for exit access stairways = Class B
Rooms and enclosed spaces = Class C

CHAPTER 9 - FIRE PROTECTION SYSTEMS

SECTION 903.2 GROUPS A-3, R AND S-2
An automatic sprinkler system installed in accordance with Section 903.3 shall be provided throughout.

SECTION 903.3.1.1: NFPA 13 SPRINKLER SYSTEMS
Sprinklers shall be installed throughout in accordance with NFPA 13 as amended in Chapter 35, except as provided in Section 903.3.1.1.1.
The fire protection system design will be a deferred submittal.

SECTION 905: STANDPIPE SYSTEMS
Standpipe systems shall be installed throughout in accordance with NFPA 14 as amended in Chapter 35 (Section 905.2). Class I standpipe systems are allowed in buildings equipped throughout with an automatic sprinkler system (Section 905.3.1 Exception 1).

SECTION 905.4: LOCATION OF CLASS I STANDPIPE (DRY STANDPIPE) HOSE CONNECTIONS
Class I standpipe hose connections shall be provided in every required interior exit stairway, for each story, located at intermediate floor landings. Standpipes shall be interconnected per NFPA 14.

TABLE 906.3: FIRE EXTINGUISHER LOCATIONS FOR CLASS A FIRE HAZARDS
For Low Hazard Occupancy; Maximum Floor Area: 11,250 SF
For Low Hazard Occupancy; Maximum Travel Distance: 75'-0"

Fire Extinguishers are located in cabinets no more than 150 ft. apart, on each floor in the R-2 corridors, and in each program area (B and S-2 occupancy areas) no more than 150 ft apart.

SECTION 907.1.2 FIRE ALARM SHOP DRAWINGS
Shop drawings for fire alarm systems shall be submitted for review and approval prior to system installation. Fire alarm system will be a deferred submittal.

SECTION 907.2 WHERE REQUIRED—NEW BUILDINGS AND STRUCTURES
An approved fire alarm system installed in accordance with the provisions of this code and NFPA 72 shall be provided in new buildings. All dwelling units shall be provided with the capability to support visible alarm notification appliances per NFPA 72.

SECTION 907.2.9: MANUAL FIRE ALARM SYSTEM
Manual fire alarm boxes are not required when the building is equipped with an automatic sprinkler system and the occupant notification appliances will automatically activate throughout the notification zones upon a sprinkler water flow.

SECTION 907.2.10.2 Single or multiple-station smoke alarms shall be installed and maintained regardless of occupant load at all of the following locations:
1. On the ceiling or wall outside of each separate sleeping area in the immediate vicinity of bedrooms.
2. Each room used for sleeping purposes

Where multiple smoke alarms are provided, they shall be interconnected within the individual unit.

SECTION 907.5 OCCUPANT NOTIFICATION SYSTEMS
A fire alarm system will be activated by any of the following:
(1) Automatic fire detectors (2) Automatic sprinkler system waterflow devices , or (3) Automatic fire-extinguishing systems and will annunciate at the fire alarm control unit and initiate occupant notification upon activation, in accordance with Sections 907.5.1 through 907.5.2.3.4.

SECTION 913 FIRE PUMPS
A fire pump room is provided at Level 1, and has 1-hr rated fire barriers per 913.2.1 Exception 1.

SECTION 915: CARBON MONOXIDE DETECTION
Carbon monoxide detection shall be provided in sleeping/dwelling units per 915.2
Carbon monoxide detection is not required for an enclosed parking garage per 915.1.6.

SECTION 918: EMERGENCY RESPONDER RADIO COVERAGE
ERRC (distributed antennae system - DAS) shall be provided per Section 510 of the California Fire Code and Conditions of Approval. This system will be provided as a deferred submittal. See the deferred submittal schedule on G0.00.

CHAPTER 10 - MEANS OF EGRESS
(See G0.13 "Occupancy Load" & G0.14 "Exiting" for diagrams)

SECTION 1003.2 CEILING HEIGHT
Ceiling height for means of egress shall not be less than 7 feet 6 inches above the finished floor. Ceilings in dwelling units are excepted and comply with Section 1207.2. Stair headroom complies with Section 1011.3. Door height complies with Section 1010.1.1.. Clear height for vehicular and pedestrian traffic areas in the garage comply with Section 406.2.2. Protruding objects are allowed if more than 80 inches above finished floor per 1003.3.1.

SECTION 1004.7 OUTDOOR AREAS
The residential courtyard on level 2 has an occupant load factor of 15 net (A-3 use, unconcentrated) and thus, two exits. The space is to be used by residents only.

SECTION 1005.3.1: STAIRWAYS
The capacity of the stairs was determined using a means of egress capacity factor of 0.2 inch per occupant, per exception 2. Occupant loads of each story are considered individually and shall be used in calculating the required capacity of the stairways serving that story.

SECTION 1005.3.2: OTHER EGRESS COMPONENTS
The capacity of means of egress components other than stairways was determined by multiplying the occupant load served by such component by a means of egress capacity factor of 0.15 inch per occupant, per exception 1.

SECTIONS 1005.4 & 1005.5 CONTINUITY & DISTRIBUTION
The minimum width or required capacity of the means of egress required from any story of a building shall not be reduced along the path of egress travel until arrival at the public way. The available capacity at each exit is equal to, or more than, 50% of the calculated total egress load.

SECTION 1005.7.1: DOORS
Doors, when fully opened, shall not reduce the required width by more than 7 inches (178 mm). Doors in any position shall not reduce the required width by more than one-half.

SECTION1006.2.1 EXCEPTION 1
In Group R-2 occupancies, one means of egress is permitted within and from individual dwelling units where the dwelling unit is equipped throughout with an automatic sprinkler system and the common path of egress travel does not exceed 125 feet .

SECTION 1006.3 EGRESS FROM STORIES
Two exits are provided from all stories above the level of exit discharge and are sized based on the aggregate occupant load. Stairway widths are calculated based on the greatest occupant load of all floors above or below the level of exit discharge.

TABLE 1006.2.1: SPACES WITH ACCESS TO ONE EXIT - MAXIMUM COMMON PATH OF EGRESS TRAVEL DISTANCE
- Occupancy Group R-2 w/Sprinkler system: 125'-0" / 20 Max. occupant load of space
- Occupancy Group A-2 w/Sprinkler system: 75'-0" / 49 Max. occupant load of space
- Occupancy Group B w/Sprinkler system: 75'-0" / 49 Max. occupant load of space
- Occupancy Group S-2 w/Sprinkler system: 75'-0" / 29 Max. occupant load of space

SECTION 1007.1.1: TWO EXITS OR EXIT ACCESS DOORWAYS
Exits are typically spaced a distance apart equal to not less than 1/3 the length of the maximum overall diagonal dimension of the building or area to be served (Exc. 2). At the residential level corridor, the distance is measured along the line of travel (Exc. 1).

SECTION 1009 ACCESSIBLE MEANS OF EGRESS
Accessible means of egress provided with accessible routes per Ch. 11B, interior exit stairways complying with Sec. 1009.3 and 1023, horizontal exits complying with 1026, and ramps complying with Sec. 1012 and 11B.

SECTION 1009.3 and 1009.4 STAIRWAYS AND ELEVATORS - AREAS OF REFUGE
No area of refuges required per 1009.3.3 Exc. 2 / 1009.4.2 Exc. 2, when building is sprinklered.

SECTION 1009.8 TWO-WAY COMMUNICATION
A two-way communication, shall be provided at the Level 2 through Level 6 elevator landings.

SECTION 1010.1.2.1: DOOR SWING
Exit doors shall swing in the direction of egress travel where serving a room or area containing an occupant load of 50 or more persons. All common area doors are 36" or wider.

SECTION 1010.1.6: LANDINGS AT DOORS
Doors in the fully open position shall not reduce the required dimension by more than 7 inches. Where a landing serves an occupant load of 50 or more, doors in any position shall not reduce the landing to less than one half its required width. Landings shall have a length measured in the direction of travel of not less than 44 inches.

SECTION 1010.1.10: PANIC AND FIRE EXIT HARDWARE
Doors serving rooms or spaces with an occupant load of 50 or more in a Group A occupancy shall not be provided with a latch or lock other than panic hardware or fire exit hardware.

SECTION 1011.2: WIDTH AND CAPACITY
The width of stairs shall not be less than 44". Handrails may project into the required width of stairs by a maximum of 4.5" at each handrail (Section 1014.8). A clear width of 48" between handrails is not required in a building equipped throughout with an automatic fire sprinkler system (Section 1009.3 Exception 2).

SECTION 1011.5: STAIRS - TREADS, RISER, FLOOR-FLOOR HEIGHT, ENCLOSED SPACES
Stair riser heights shall be 7" maximum (4" minimum) and stair tread depths shall be a minimum of 11". Stair tread depth and riser height shall be uniform to a tolerance not to exceed 0.375" in any flight of stairs (Section 1011.5.4). A flight of stairs shall not have a vertical rise of greater than 12 feet between floor levels or landings. (Section 1011.8). Walls and soffits within enclosed usable spaces under enclosed stairways shall be protected by 1-hr fire resistance-rated construction or the fire-resistance rating of the stairway enclosure, whichever is greater. (Sec. 1011.7.3)

SECTION 1011.12: STAIRWAY TO ROOF
For buildings four or more stories above grade plane, one stairway shall extend to the roof surface.

SECTION 1015.2 - 1015.4: GUARDS
Guards shall be located along all open-sided walking surfaces that are located more than 30" measured vertically to the floor or grade below at any point within 36' horizontally to the edge of the open side. Guards are not less than 42" high, measured vertically above the adjacent walking surfaces (Section 1015.3). Open guards shall be such that a 4" sphere cannot pass through (Section 1015.4). The triangular opening at the bottom sides of a stair, formed by the riser, tread and bottom rail shall not allow passage of a sphere 6" in diameter. Guards within a dwelling unit may have a height between 34" minimum to 38" maximum (Section 1015.3 Exception 2).

SECTION 1015.8: WINDOW SILLS
Where the opening of the sill portion of an operable window in a Group R-2 occupancy is located more than 72" above the finished grade below, the window sill height shall be not less than 36" above the finished floor of the room. Operable windows below the 36" sill height shall not permit openings that allow passage of a 4 inch diameter sphere.

SECTION 1016.2: EGRESS THROUGH INTERVENING SPACES
Egress from a space shall not pass through adjoining or intervening rooms or areas, except where such adjoining rooms or areas served are accessory to one or the other. No exit access shall pass through a room that can be locked prevent egress.

TABLE 1017.2: EXIT ACCESS TRAVEL DISTANCE
Occupancy Group R-2 and Group A-3 w/Sprinkler system: 250'-0"
Occupancy Group B w/Sprinkler system: 300'-0"
Occupancy Group S-2 w/ Sprinkler system: 400' -0"

TABLE 1020.2: CORRIDOR WIDTH
The minimum corridor width shall not be less than 44" except that within a dwelling unit, the minimum corridor width shall not be less than 36". The maximum dead-end corridor shall not exceed 50' for Group R-2 occupancies where the building is equipped throughout with an automatic sprinkler system (Section 1020.4 Exception 2.)

SECTION 1020.6: CORRIDOR CONTINUITY
Fire-resistance-rated corridors shall be continuous from the point of entry to an exit and shall not be interrupted by intervening rooms. Per Exception 1, foyers, lobbies, or reception rooms constructed as required for corridors shall not be construed as intervening rooms.

SECTION 1023: INTERIOR EXIT STAIRWAYS
Interior exit stairways shall be enclosed with fire barriers in accordance with Section 707 or horizontal assemblies constructed in accordance with Section 711, or both. Interior exit stairway enclosures shall have a fire-resistance rating of not less than 2 hours. Interior exit stairways and ramps shall be enclosed and lead directly to the exterior of the building or shall be extended to the exterior of the building with an exit passageway conforming to the requirements of Section 1024.

SECTION 1026.2: HORIZONTAL EXITS - SEPARATION
The separation between buildings or refuge areas connected by a horizontal exit shall be provided by a fire wall complying with Section 706; or by a fire barrier complying with Section 707 or a horizontal assembly complying with Section 711, or both. The minimum fire-resistance rating of the separation shall be 2 hours. Opening protectives in horizontal exits shall also comply with Section 716. Duct and air transfer openings in a fire wall or fire barrier that serves as a horizontal exit shall also comply with Section 717. The horizontal exit separation shall extend vertically through all levels of the building unless floor assemblies have a fire-resistance rating of not less than 2 hours and do not have unprotected openings.

SECTION 1028 EXIT DISCHARGE
Stair 1 discharged into the ground floor lobby and has an unobstructed and free path of travel to the exterior door at the main building entry, and the building is protected throughout with a sprinkler system.(Exc. 1)

CHAPTER 11B ACCESSIBILITY

All residential areas (incl. dwelling units) of the project and common areas are designed in accordance with UFAS and in accordance with Chapter 11B / 2010 ADAS. As a publicly funded elevator-served building, 15% of the units also comply with Chapter 11B accessibility for mobility and 10% of the units also comply with accessibility for communications. All units and common spaces are on an accessible route. See A4.00 for a distribution of the adaptable and accessible units.

DOORS (11B-404)
Common Area doors and Primary Unit doors comply with Section 11B-404 for width and height, level landings, maneuvering clearances and approaches, latches, hardware, and glazing. Interior doors and Secondary Exterior doors comply with 11B-404 for width and height, level landings, maneuvering clearances and approaches, latches, and hardware. Every primary unit entry door to have a signal device mounted at maximum 48" above the floor and permanently wired. A 39" length approach to interior unit doors is acceptable when a minimum clear opening width of 34 inches is provided. Door openings shall provide a clear width of 32 inches minimum measured between the face of the door and the stop, with the door open 90 degrees. Openings more than 24 inches deep shall provide a clear opening of 36 inches minimum. There shall be no projections into the required clear opening width lower than 34 inches above the finish floor or ground.

KITCHENS (11B-212, 11B-804)
Unit Kitchens shall be on an accessible route and shall comply with the requirements for clear approach (30x48 inches) to range/cooktop, kitchen sink and all other appliances, centered on the appliance / fixture; base cabinets are removable without the use of special tools and floor continues below cabinet. An accessible sink (30" w.) and 30" w. work surface is provided at adaptable units with the use of a removable cabinet or open work surface (11B-804). 48" clear width provided throughout the kitchen in adaptable units. Unit Kitchens in accessible have 50% of storage within reach ranges complying with 11B-811. Countertops are at 36" in adaptable units and 34" in accessible units.

BATHROOMS (11B-213, 11B-603, 604, 606, 607, 609)
All unit bathrooms and common area bathrooms are on an accessible route, with doors of sufficient width for passage, a minimum 18" strike side clearance, switches mounted no more than 48" AFF, and reinforcing for grab bars (whether installed or for future installation).
All adaptable bathrooms have maneuvering space clear of the swing of the door, clear approaches (30x48 inches) to the bathtub, toilet, and lavatory, reinforcing for grab bars. The centerline of the toilet shall be 17" minimum and 18" maximum from adjacent walls, vanities or lavatory, with reinforcing for grab bars. Lavatory is 24" minimum from walls or fixtures, and 34" max. above the floor. Protect water supply and drain pipes under lavatories. Mirrors and towel fixtures are mounted with the bottom edge no higher than 40 inches AFF. Where the toilet is not located adjacent a side wall, provide blocking for the installation of a floor mounted, fold away or similar alternative grab bar in accordance with UL 1784 without an artificial bottom seal
All accessible bathrooms comply with the provisions of 11B-603, 605, 606, 607, and 609 as applicable for clearances into and through the bathroom, approaches to plumbing fixtures, mounting heights and reinforcing.

PARKING (11B-208.2, 11B-228.3)
Accessible parking is provided at Level 1 Garage. See parking stall type matrix on G0.00

ELEVATORS
Elevators comply with 11B-407 for landings, call controls, signals, elevator doors, car dimensions and controls, and emergency communications.

MAILBOXES
Interior mailboxes provided. 5% minimum of tenant mailboxes required to comply with Section 11B-309 accessible reach ranges. 1 Parcel box provided for every 10 residential tenant mailboxes per USPS 4C Standards.

WASHING AND DRYING MACHINES
One washing machine and one drying machine comply with 11B-611, for clear floor space, operable parts within reach ranges, and height of doors to laundry compartments.

BENCHES
Benches comply with 11B-903 for clear floor space, height, structural strength, wet locations, overall size, and back support.

CHAPTER 12 - INTERIOR ENVIRONMENT

SECTION 1202.5 AND 1204.2: NATURAL VENTILATION AND LIGHT
All occupied spaces shall be naturally ventilated with windows, doors, or louvers. The minimum operable area is 4% of the floor area being ventilated (Section 1202.5.1). An opening can be used to ventilate an adjoining space if the opening to the adjoining room is unobstructed and has an area of not less than 8% of the floor area of the interior room or space but not less than 25 square feet. Every space intended for human occupancy shall be provided with natural or artificial light. Bathrooms shall be mechanically ventilated.
The minimum net glazed area for natural light is 8% of the floor area being served (Section 1204.2.) An opening can be used to provide natural light to an adjoining space if ½ the area of the common wall to the adjoining room is unobstructed and provides an opening of not less than 10% of the floor area of the interior room or 25 square feet, whichever is greater.

SECTION 1206: INTERDWELLING NOISE CONTROL
Walls and floor-ceiling assemblies separating dwelling units or guest rooms from each other and from public or service areas such as interior corridors, garages and mechanical spaces shall have a sound-transmission class (STC) of not less than 50 (45 if field-tested) for airborne noise when tested in accordance with ASTM E90. Floor/ ceiling assemblies shall have an impact insulation class IIC rating of not less than 50 (45 if field-tested) when tested according to ASTM E 492 for structure-borne noise.

SECTION 1207 INTERIOR SPACE DIMENSIONS
Habitable spaces, other than a kitchen, shall not be less than 7 feet in any plan dimension (Section 1207.1). Occupiable spaces, habitable spaces and corridors shall have a ceiling height of not less than 7 feet 6 inches. Bathrooms, toilet rooms, kitchens, storage rooms and laundry rooms , and corridors within a dwelling unit shall be permitted to have a ceiling height of not less than 7 feet (Section 1207.2.) Furred ceilings shall not be less than 7 ft in height and shall not be more than 1/3 of the room area. Every dwelling unit shall have one room not less than 120 sf.

SECTION 1211 POLLUTANT CONTROL
Finish materials shall meet the VOC emission limits in accordance with CalGreen Chapter 4, Division 4.5.

CHAPTER 15 ROOF
Table 1505.1: Minimum Roof Covering Classification for Types of Construction The minimum roof classification required for Type III-A construction is Class B. Class B roof assemblies are those that are effective against moderate fire-test exposure.

SECTION 1510.8 and 1512 – ROOFTOP STRUCTURES & PV PANELS AND MODULES
The structural supports for the photovoltaic panels shall be of non-combustible construction.

SECTION 2406 & 2407 SAFETY GLAZING
Mirrors and individual glazed areas in doors and windows in hazardous locations shall comply with this section as well as Tables 2406.1 and 2406.2. Glass in guardrails shall comply with this section and be Category II or CPSC 16 CFR Part 1201 or Class A of ANSI Z97.1

CHAPTER 30 - ELEVATORS AND CONVEYING SYSTEMS

SECTION 3002
The hoistway shall be a shaft enclosure, 2-hr rated per CBC 712 and 713. The elevator is designed to accommodate ambulance stretcher 24" x 84" with 5-inch radius corners, and 2 personnel (3002.4). Protection of elevator hoistway door openings is not required at the level(s) of exit discharge.(3006.2 Exc. 2). Enclosed elevator lobbies are not required where additional doors are provided at the hoistway opening in accordance with Section 3002.6. Such door shall comply with the smoke and draft control door assembly requirements in Section 716.5.3.1 when tested (3006.3). Smoke guard doors provided at Levels 2-6.

PYATOK
1611 TELEGRAPH AVE.
SUITE 200
OAKLAND, CA 94612
T. 510.465.7010 | F. 510.465.8575
www.pyatok.com

THE UNITY COUNCIL
1900 FRUITVALE AVE
#2A
OAKLAND, CA 94601

2700 INTERNATIONAL
OAKLAND, CA 94601

STAMP:
LICENSED ARCHITECT
PETER WALLER
C-23551
RENEWAL DATE 4/30/2023
STATE OF CALIFORNIA

ISSUE SCHEDULE

100 SD	5/11/22
50 DD	7/15/22
100 DD	9/16/22
50 CD	11/18/22
PERMIT SET	12/09/22

REVISION SCHEDULE

NO.	ISSUE	DATE

JOB NUMBER:	1937
DRAWN BY:	MA, DV, TN, MO, SP
CHECKED BY:	Checker
ISSUE DATE:	12/09/22
SCALE:	

TITLE:
CODE SUMMARY

SHEET:
G0.10

PRELIMINARY - Not for Construction -

© 2019 PYATOK ARCHITECTURE & URBAN DESIGN

12/8/2022 6:20:27 PM

AREA PLAN BY OCCUPANCY - LEVEL 5-6 (5)
3/64" = 1'-0"

AREA PLAN BY OCCUPANCY - LEVEL 2 (2)
3/64" = 1'-0"

AREA PLAN BY OCCUPANCY - LEVEL 4 (4)
3/64" = 1'-0"

AREA PLAN BY OCCUPANCY - LEVEL 1 (1)
3/64" = 1'-0"

AREA PLAN BY OCCUPANCY - LEVEL 3 (3)
3/64" = 1'-0"

12/8/2022 6:20:47 PM

Per CBC 202, Definitions:

AREA, BUILDING. The area included within surrounding exterior walls, or exterior walls and fire walls exclusive of vent shafts and courts. Areas of the building not provided with surrounding walls shall be included in the building area if such areas are included within the horizontal projection of the roof or floor above.

FLOOR AREA, GROSS. The floor area within the inside perimeter of the exterior walls of the building under consideration, exclusive of vent shafts and courts, without deduction for corridors, stairways, ramps, closets, the thickness of interior walls, columns or other features. The floor area of a building, or portion thereof, not provided with surrounding exterior walls shall be the usable area under the horizontal projection of the roof or floor above. The gross floor area shall not include shafts with no openings or interior courts.

FLOOR AREA, NET. The actual occupied area not including unoccupied accessory areas such as corridors, stair-ways, ramps, toilet rooms, mechanical rooms and closets.

BUILDING HEIGHT DIAGRAM (7)
1/16" = 1'-0"

BUILDING 2 (TYPE III-A) ALLOWABLE AREA DETERMINATION

506.2.4 MIXED-OCCUPANCY, MULTISTORY BUILDINGS
Each story of a mixed-occupancy building with more than one story above grade plane shall individually comply with the applicable requirements of Section 508.1.

Per 508.3.2, at the Level 2 non-seperated occupancies the allowable building area shall be based on the most restrictive allowances for the occupancy groups under consideration

Per 508.4.2 In each story, the building area shall be such that the sum of the ratios of the actual building area of each separated occupancy divided by the allowable building area of each separated occupancy shall not exceed 1.

Equation 5-3 :
Aa for Occupancy Group A-3
Aa = At + (NS × If)
At = 14,000 SF
NS = 14,000 SF
If = 0.25
Aa = [14,000 SF + (14,000 SF x 0.25)]
Aa = [14,000 SF + 350 SF]
Aa = 14,350 SF

Aa for Occupancy Group R-2
Aa = At + (NS × If)
At = 24,000 SF
NS = 24,000 SF
If = 0.25
Aa = [24,000 SF + (24,000 SFx 0.25)]
Aa = [24,000 SF + 600 SF]
Aa = 24,600 SF

BUILDING 2 AREA

LEVEL 2	A-3	1,939 SF
LEVEL 2	R-2	7,153 SF
LEVEL 2	S-2	128 SF
		9,220 SF
LEVEL 3	R-2	9,220 SF
		9,220 SF
LEVEL 4	R-2	7,467 SF
		7,467 SF
LEVEL 5	R-2	7,467 SF
		7,467 SF
LEVEL 6	R-2	7,203 SF
		7,203 SF
Grand total		**40,577 SF**

Occupancies:	A-3		R-2					
Level 2								
Actual Area	2,067	+	7,153	+	=	**0.643**	<	1
Allowable Area	14,350		14,350					
Level 3								
Actual Area	0	+	9,220	+	=	**0.375**	<	1
Allowable Area	14,350		24,600					
Level 4								
Actual Area	0	+	7,467	+	=	**0.304**	<	1
Allowable Area	14,350		24,600					
Level 5								
Actual Area	0	+	7,467	+	=	**0.304**	<	1
Allowable Area	14,350		24,600					
Level 6								
Actual Area	0	+	7,203	+	=	**0.293**	<	1
Allowable Area	14,350		24,600					

BASED ON MOST RESTRICTIVE PER CBC 508.3.2

Per 506.2.4, for buildings over 3 stories, the total building area shall be such that the aggregate sum of the ratios of the actual area of each story divided by the allowable area of such stories, determined by Equation 5-3, shall not exceed 2.

Level 2		Level 3		Level 4		Level 5		Level 6				
0.643	+	0.375	+	0.304	+	0.293	+	0.293	=	**1.906**	<	2

BUILDING 2 (TYPE III-A) ALLOWABLE AREA DETERMINATION

506.2.3 SINGLE-OCCUPANCY, MULTISTORY BUILDINGS (LEVEL 2 - LEVEL 5)
The allowable area of a single-occupancy building with more than one story above grade plane shall be determined in accordance with Equation 5-2. No individual story shall exceed the allowable area (Aa) as determined by Equation 5-2 using the value of Sa = 1.

Equation 5-2
Aa = [At + (NS x If)] × Sa
At = 24,000 SF <-- USING OCCUPANCY R-2 W/ HEIGHT INCREASE
NS = 24,000 SF
If = 0.25 <-- FRONTAGE INCREASE CALCULATION
Sa = 2

Aa = [24,000 SF + (24,000 SF x 0.25)] x 2
Aa = [24,000 SF + 600 SF] x 2
Aa = 49,200 SF

BUILDING 3 AREA = 36,466 SF

36,466 SF < 79,440 SF (Aa)
EACH LEVEL < 24,000 SF (with Sa of 1)

BUILDING 3 AREA

Level	Occupant Group	Area
LEVEL 2	R-2	7,688 SF
LEVEL 3	R-2	7,678 SF
LEVEL 4	R-2	7,678 SF
LEVEL 5	R-2	6,711 SF
LEVEL 6	R-2	6,711 SF
BLDG 3		36,466 SF

506.3 FRONTAGE INCREASE

If = AREA INCREASE DUE TO FRONTAGE
F = BUILDING PERIMETER FRONTING ON A PUBLIC WAY OF 20' MIN.
P = TOTAL PERIMETER OF THE ENTIRE BUILDING
W = WIDTH OF PUBLIC WAY OR OPEN SPACE
= 66' @ 27th AVE
= 80' @ INTERNATIONAL
= 50' @ MITCHELL
IF W>30', THAN W=30, THEREFORE W/30 = 1.0 (MAX) FOR PUBLIC WAY FRONTAGES

BUILDING 2 FRONTAGE INCREASE CALCULATION

F = F1 + F2
F = 122' + 122.2' = 244.2'
P = P1 + P2 + P3 + P4
P=122'+122.2'+122'+122.2' = 488.4'
If = [F/P - 0.25] x W /30 Where W = 30
If = [(244.2' / 488.4') - 0.25] x (30/30)
If = 0.50 - 0.25
If = 0.25

BUILDING 3 FRONTAGE INCREASE CALCULATION

F = F1 + F2
F = 65.2' + 130.1' = 195.3'
P = P1 + P2 + P3 + P4
P= 65.2'+130.1'+65.2'+130.1' = 390.6'
If = [F/P - 0.25] x W /30 Where W = 30
If = [(195.3' / 390.6') - 0.25] x (30/30)
If = 0.50 - 0.25
If = 0.25

BUILDING HEIGHT AND AREA PER CBC CHAPTER 5

CONSTRUCTION TYPE: 5-STORY OF TYPE III-A
1-STORY TYPE I-A

OCCUPANCY: A-3 (ASSEMBLY)
B (BUSINESS)
R-2 (RESIDENTIAL)
S-2 (STORAGE)

SPRINKLERED: YES, NFPA 13, 14, 72, 82

NOTES:
FOR THE PURPOSES OF DETERMINING AREA LIMITATIONS, LIMITATION OF NUMBER OF STORIES AND TYPE OF CONSTRUCTION, THE PROJECT IS 3 DISTINCT BUILDINGS.

PER CBC 510.2, A 3-HR HORIZONTAL ASSEMBLY SEPARATES BUILDING 1, WHICH IS OF TYPE I-A CONSTRUCTION, FROM THE BUILDINGS ABOVE THE HORIZONTAL ASSEMBLY.

PER CBC 503.1 AND CBC 510.9, BUILDING 2 AND BUILDING 3, BOTH OF TYPE III-A CONSTRUCTION AND LOCATED ABOVE THE HORIZONTAL ASSEMBLY, ARE SEPERATED BY A FIRE WALL COMPLYING WITH CBC 706 AND ARE REGARDED AS SEPERATE AND DISTINCT BUILDINGS.

BUILDING 1 IS A MIXED-OCCUPANCY, SINGLE-STORY BUILDING WITH NON-SEPARATED OCCUPANCIES. ALLOWABLE BUILDING AREA IS DETERMINED BY CBC 506.2.2 AND CBC 508.3.

BUILDING IS 2 IS A MIXED-OCCUPANCY, MULTISTORY BUILDING. LEVEL 2 OCCUPANCIES ARE NON-SEPERATED. THE R-2 OCCUPANCIES AT LEVELS 3-6 ARE SEPERATED FROM LEVEL 2 WITH A 1-HR HORIZONTAL ASSEMBLY AND ARE CONSIDERED SEPARATED OCCUPANCIES. ALLOWABLE BUILDING AREA IS DETERMINED BY CBC 506.2.4 AND CBC 508.4.

BUILDING 3 IS A SINGLE OCCUPANCY, MULTISTORY BUILDING. ALLOWABLE AREA IS DETERMINED BY CBC 506.2.3.

PER 504.2, IN A MIXED OCCUPANCY BUILDING, NO INDIVIDUAL OCCUPANCY MAY EXCEED THE HEIGHT AND STORY LIMITS IN SECTION 504. SEE AREA TABLES WITH EACH BUILDING CALCULATION.

TABLE 504.3 - ALLOWABLE BUILDING HEIGHT IN FEET ABOVE GRADE PLANE
SPRINKLED

	TYPE I-A	TYPE III-A
A-3	UL	85' (W/O AREA INCREASE)
B	UL	85'
R-2	UL	85' (W/O AREA INCREASE)
S-2	UL	85'

TABLE 504.4 - ALLOWABLE STORIES ABOVE GRADE PLANE
SPRINKLED WITHOUT AREA INCREASE

	TYPE I-A	TYPE III-A
A-3	UL	4 STORIES <-- MOST-RESTRICTIVE OCCUPANCY
B	UL	6 STORIES
R-2	UL	5 STORIES
S-2	UL	5 STORIES

TABLE 506.2 - TABULAR ALLOWABLE AREA FACTORS
SPRINKLED

	TYPE I-A	TYPE III-A
A-3	UL	14,000 SF (WITH HEIGHT INCREASE)
B	UL	85,500 SF
R-2	UL	24,000 SF (WITH HEIGHT INCREASE)
S-2	UL	117,000 SF

BUILDING 1 (TYPE I-A) ALLOWABLE AREA DETERMINATION

PER CBC 506.2.2 AND CBC 508.3 ALLOWABE AREA SHALL BE BASED ON THE MOST RESTRICTIVE ALLOWANCES FOR THE OCCUPANCY GROUPS UNDER CONSIDERATION AND EQUATION 5-1. OCCUPANCY GROUPS CONSIST OF S-2, B, AND R-2.

Equation 5-1
Aa = At + (NS × If)
At = UNLIMITED <-- MOST-RESTRICTIVE OCCUPANCY

Aa = UNLIMITED

BUILDING 1 AREAS

S-2	14,093 SF
R-2	1,918 SF
B	6,362 SF
BLDG 1	22,373 SF

FRONTAGE DIAGRAM (6)
1/32" = 1'-0"

PYATOK
1611 TELEGRAPH AVE.
SUITE 200
OAKLAND, CA 94612
T. 510.465.7010 | F. 510.465.8575
www.pyatok.com

THE UNITY COUNCIL
1900 FRUITVALE AVE
#2A
OAKLAND, CA 94601

2700 INTERNATIONAL
OAKLAND, CA 94601

STAMP:
LICENSED ARCHITECT
PETER WALLER
C-23551
RENEWAL DATE
4/30/2023
STATE OF CALIFORNIA

ISSUE SCHEDULE

100 SD	5/11/22
50 DD	7/15/22
100 DD	9/16/22
50 CD	11/18/22
PERMIT SET	12/09/22

REVISION SCHEDULE

NO.	ISSUE	DATE

JOB NUMBER:	1937
DRAWN BY:	MA, DV, TN, MO, SP
CHECKED BY:	Checker
ISSUE DATE:	12/09/22
SCALE:	As indicated

TITLE:
CODE DIAGRAMS - BUILDING HEIGHT AND AREA

SHEET:
G0.11

PRELIMINARY - Not for Construction -

© 2019 PYATOK ARCHITECTURE & URBAN DESIGN

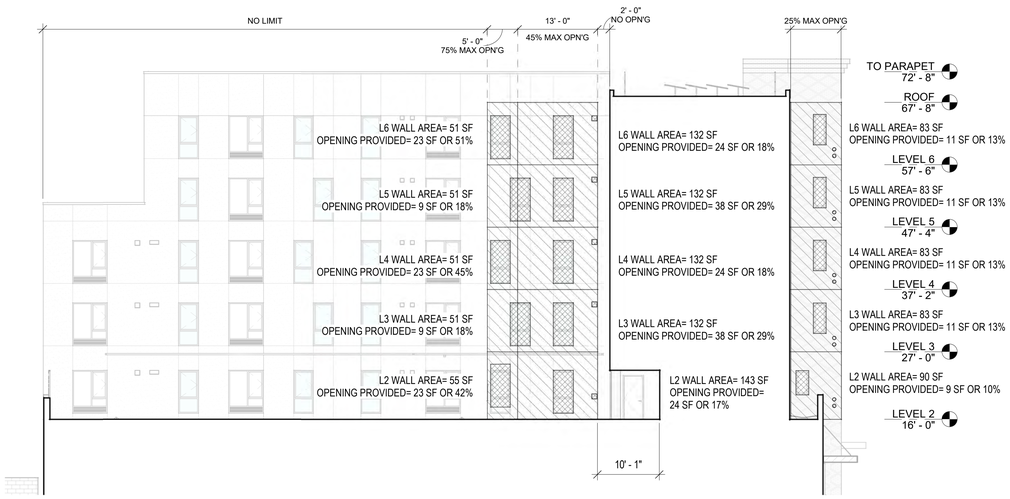

WEST ELEVATION - COURTYARD OPENINGS (11)
1" = 10'-0"

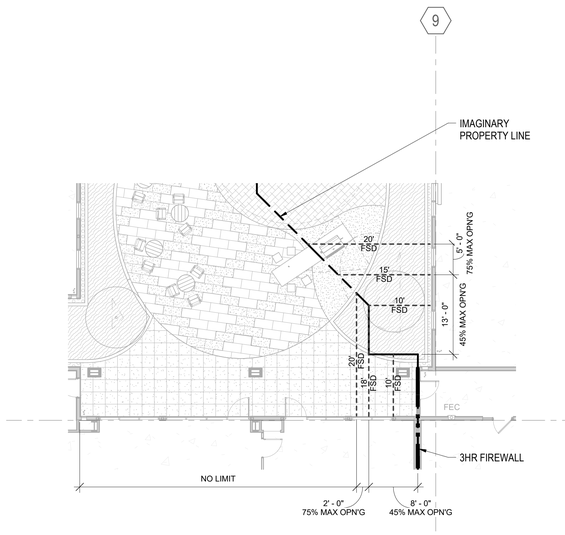

LEVEL 2 FIRE SEPERATION DISTANCE DIAGRAM - ENLARGED (7)
1" = 10'-0"

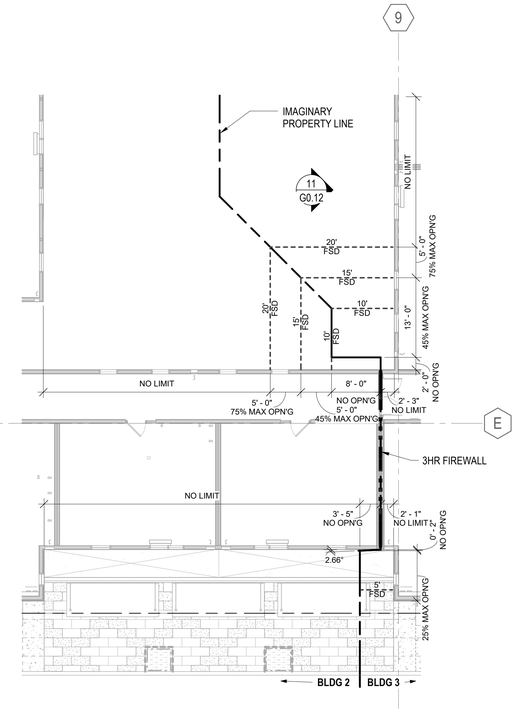

LEVEL 3 FIRE SEPARATION DISTANCE DIAGRAM - ENLARGED (2)
1" = 10'-0"

CBC 2019 TABLE 705.8, MAXIMUM AREA OF EXTERIOR WALL OPENINGS BASED ON FIRE SEPERATION DISTANCE AND DEGREE OF OPENING PROTECTION

UNPROTECTED, SPRINKLERED:
3 TO LESS THAN 5 FEET = 15%
5 TO LESS THAN 10 FEET = 25%
10 TO LESS THAN 15 FEET = 45%
15 TO LESS THAN 20 FEET = 75%
20 OR GREATER = NO LIMIT

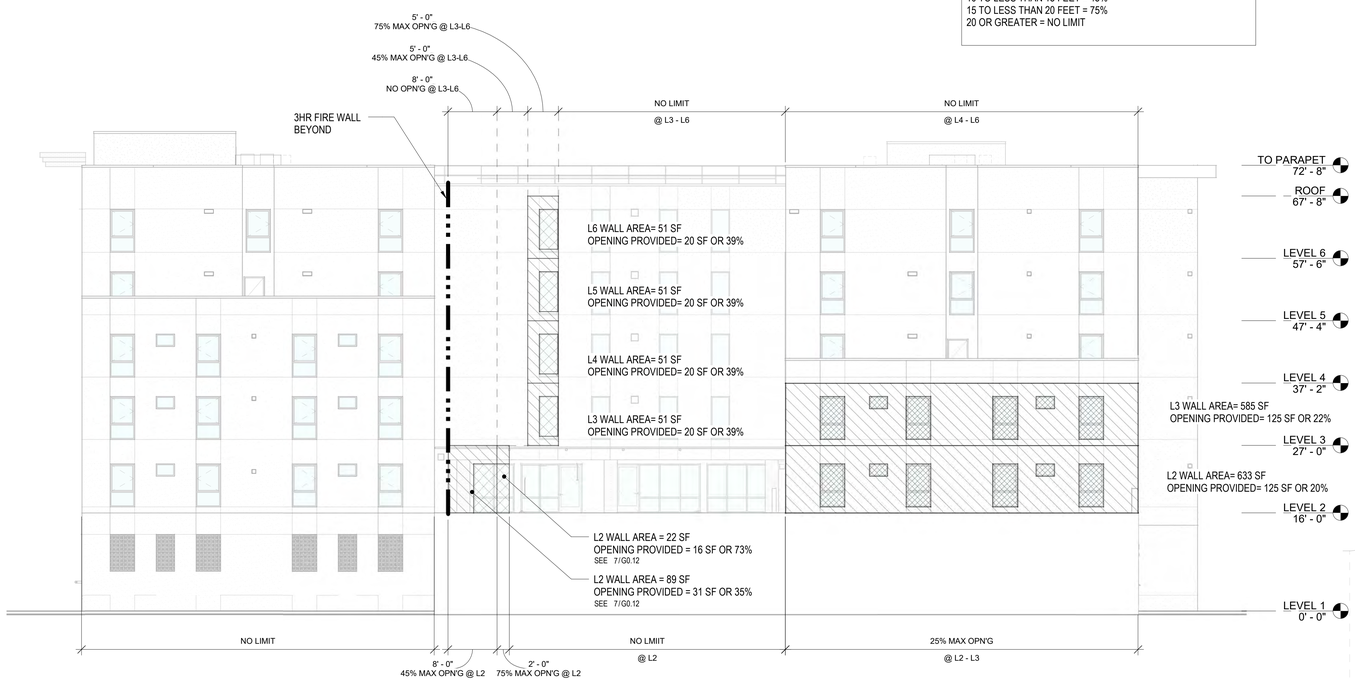

NORTH ELEVATION - OPENINGS (9)
1" = 10'-0"

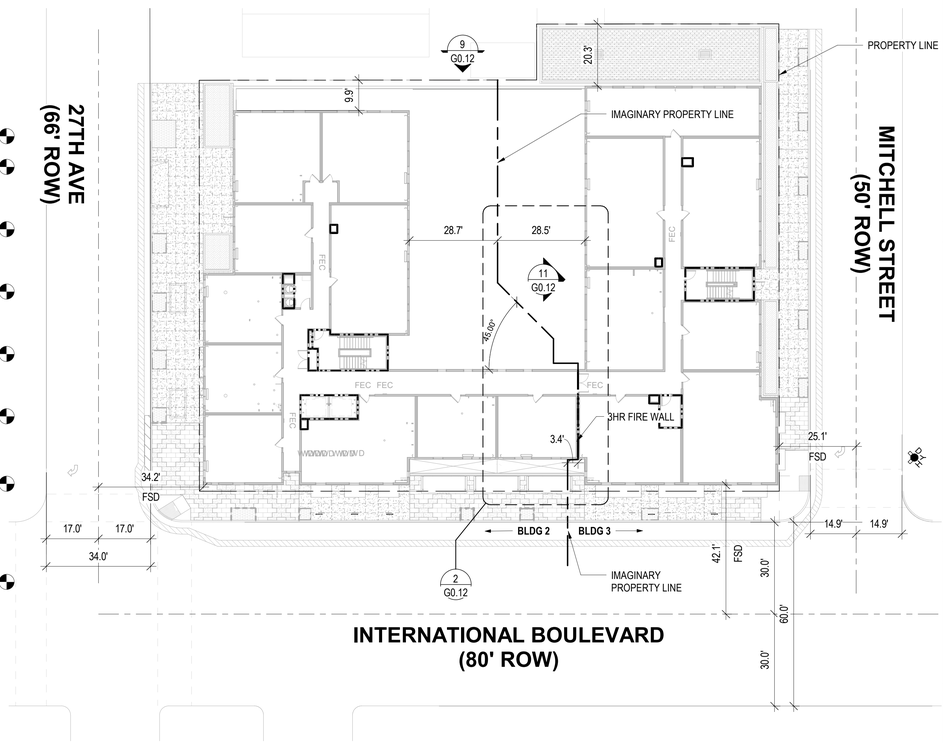

LEVEL 3 FIRE SEPARATION DISTANCE DIAGRAM, L4-L6 SIMILAR (1)
1" = 20'-0"

12/8/2022 6:20:56 PM

PYATOK
1611 TELEGRAPH AVE.
SUITE 200
OAKLAND, CA 94612
T. 510.465.7010 | F. 510.465.8575
www.pyatok.com

THE UNITY COUNCIL
1900 FRUITVALE AVE
#2A
OAKLAND, CA 94601

2700 INTERNATIONAL

OAKLAND, CA 94601

STAMP:

LICENSED ARCHITECT
PETER WALLER
CA 25554
STATE OF CALIFORNIA
8/30/2022

ISSUE SCHEDULE

100 SD	5/11/22
50 DD	7/15/22
100 DD	9/16/22
50 CD	11/18/22
PERMIT SET	12/09/22

REVISION SCHEDULE

NO.	ISSUE	DATE

JOB NUMBER:	1937
DRAWN BY:	MA, DV, TN, MO, SP
CHECKED BY:	Checker
ISSUE DATE:	12/09/22
SCALE:	As indicated

TITLE:
CODE DIAGRAM - FSD & OPENING PROTECTIONS

SHEET:
G0.12

PRELIMINARY - Not for Construction -

© 2019 PYATOK ARCHITECTURE & URBAN DESIGN

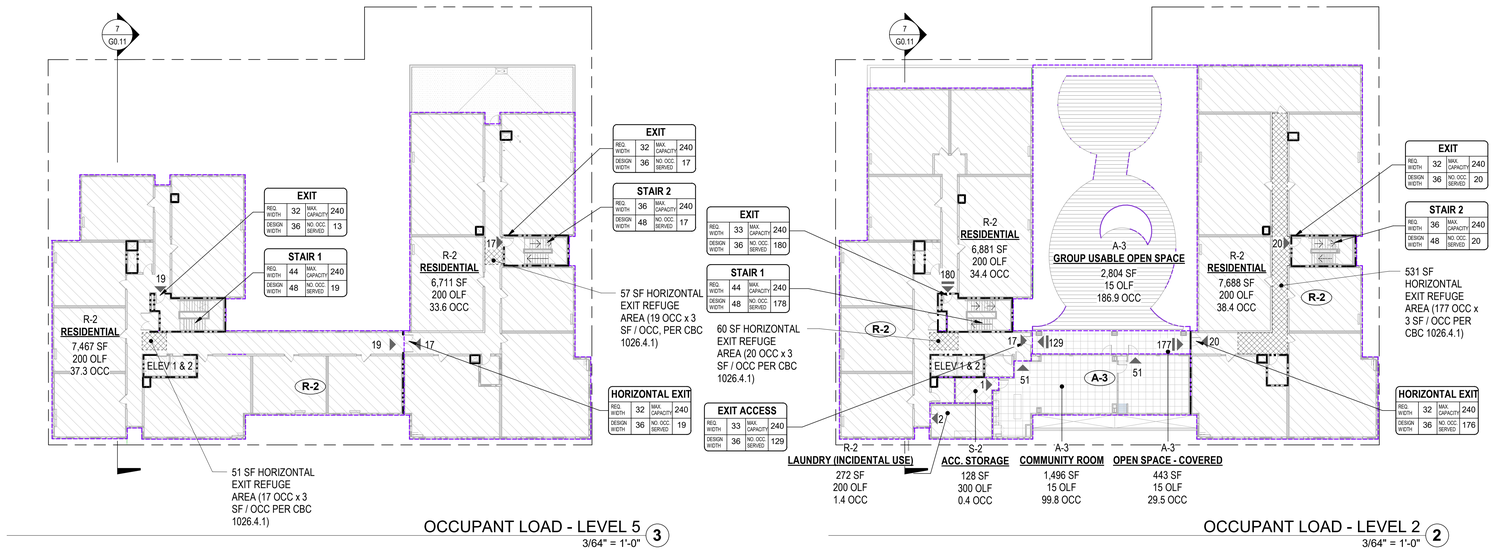

OCCUPANT LOAD - LEVEL 5 (3)
3/64" = 1'-0"

OCCUPANT LOAD - LEVEL 2 (2)
3/64" = 1'-0"

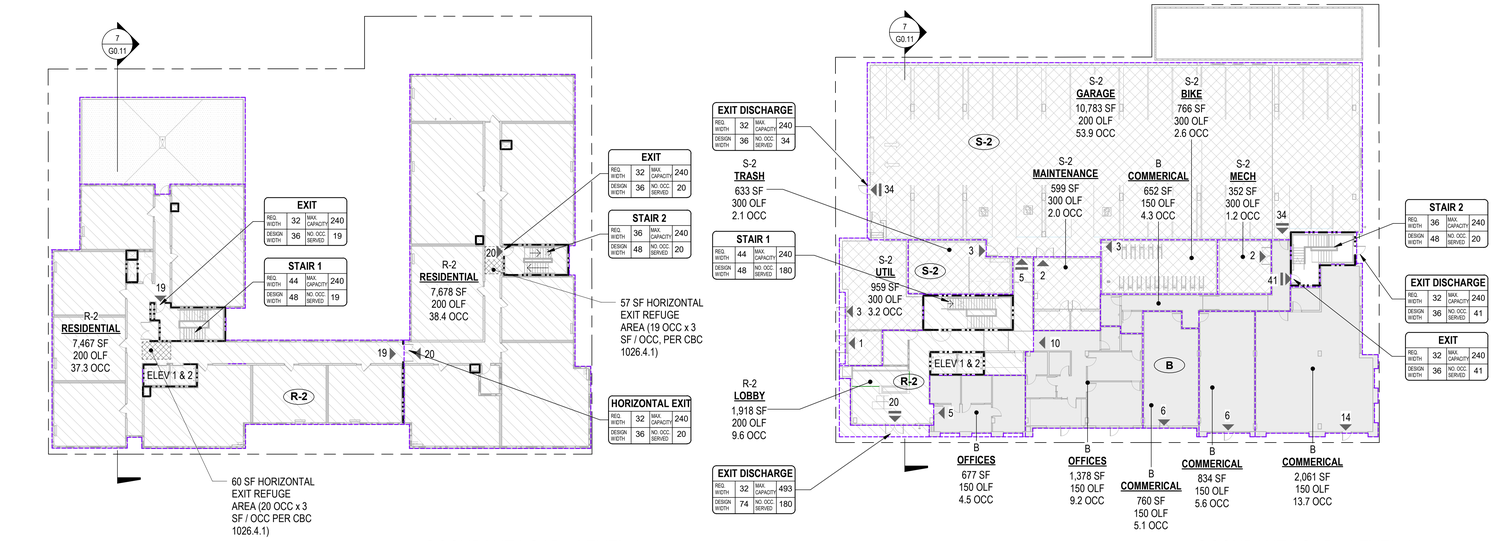

OCCUPANT LOAD - LEVEL 4 (4)
3/64" = 1'-0"

OCCUPANT LOAD - LEVEL 1 (1)
3/64" = 1'-0"

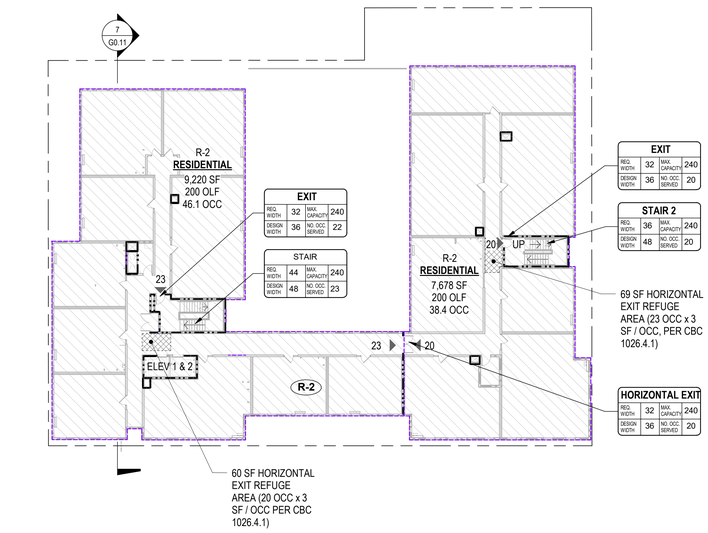

AREA PLAN BY OCCUPANCY - LEVEL 3 (5)
3/64" = 1'-0"

LEGEND

- **LANDSCAPE** (EXCLUDED)
- **A-3 OCCUPANCY: ASSEMBLY, UNCONCENTRATED**
- **B OCCUPANCY: BUSINESS**
- **R-2 OCCUPANCY: RESIDENTIAL**
- **S-2 OCCUPANCY: STORAGE**
- **1-HR FIRE-RESISTANCE RATED CONSTRUCTION**
- **2-HR FIRE-RESISTANCE RATED CONSTRUCTION**
- **3-HR FIRE-RESISTANCE RATED CONSTRUCTION**
- ## **# OCCUPANTS EXITING FROM SPACE**
- ## **# CUMLATIVE OCCUPANTS EXITING FROM SPACE**

001_OCCUPANT LOAD

NAME	CONSTRUCTION TYPE	OCCUPANT GROUP	FUNCTION OF SPACE	AREA	OCC. LOAD FACTOR	# OF OCCUPANTS
LEVEL 1						
COMMERICAL	I-A	B	BUSINESS	4,307 SF	150	31
OFFICES	I-A	B	BUSINESS	2,055 SF	150	15
LOBBY	I-A	R-2	RESIDENTIAL	1,918 SF	200	10
BIKE	I-A	S-2	ACCESSORY STOR., MECH. EQUIP. RM.	766 SF	300	3
GARAGE	I-A	S-2	PARKING	10,783 SF	200	54
MAINTENANCE	I-A	S-2	ACCESSORY STOR., MECH. EQUIP. RM.	599 SF	300	2
MECH	I-A	S-2	ACCESSORY STOR., MECH. EQUIP. RM.	352 SF	300	2
TRASH	I-A	S-2	ACCESSORY STOR., MECH. EQUIP. RM.	633 SF	300	3
UTIL	I-A	S-2	ACCESSORY STOR., MECH. EQUIP. RM.	959 SF	300	4
LEVEL 2						
COMMUNITY ROOM	III-A	A-3	ASSEMBLY W/OUT FIXED SEATS, UNCONCENTRATED	1,496 SF	15	100
GROUP USABLE OPEN SPACE	III-A	A-3	ASSEMBLY W/OUT FIXED SEATS, UNCONCENTRATED	2,804 SF	15	187
OPEN SPACE - COVERED	III-A	A-3	ASSEMBLY W/OUT FIXED SEATS, UNCONCENTRATED	443 SF	15	30
LAUNDRY (INCIDENTAL USE)	III-A	R-2	RESIDENTIAL	272 SF	200	2
RESIDENTIAL	III-A	R-2	RESIDENTIAL	6,881 SF	200	35
RESIDENTIAL	III-A	R-2	RESIDENTIAL	7,688 SF	200	39
ACC. STORAGE	III-A	S-2	ACCESSORY STOR., MECH. EQUIP. RM.	128 SF	300	1
LEVEL 3						
RESIDENTIAL	III-A	R-2	RESIDENTIAL	9,220 SF	200	45
RESIDENTIAL	III-A	R-2	RESIDENTIAL	7,678 SF	200	39
LEVEL 4						
RESIDENTIAL	III-A	R-2	RESIDENTIAL	7,467 SF	200	37
RESIDENTIAL	III-A	R-2	RESIDENTIAL	7,678 SF	200	39
LEVEL 5						
RESIDENTIAL	III-A	R-2	RESIDENTIAL	7,467 SF	200	38
RESIDENTIAL	III-A	R-2	RESIDENTIAL	6,711 SF	200	34
LEVEL 6						
RESIDENTIAL	III-A	R-2	RESIDENTIAL	7,203 SF	200	37
RESIDENTIAL	III-A	R-2	RESIDENTIAL	6,711 SF	200	39

NOTES:

SECTION 1005.3.1: STAIRWAYS
Egress capacity factor of 0.3 inch per occupant. When equipped throughout with an automatic sprinkler system installed in accordance with Section 903.3.1.1 or 903.3.1.2 and an emergency voice/alarm communication system in accordance with Section 907.5.2, than use 0.2 inches per occupant.

SECTION 1005.3.2: OTHER EGRESS COMPONENTS
Egress capacity factor of 0.2 inch per occupant. When equipped throughout with an automatic sprinkler system installed in accordance with Section 903.3.1.1 or 903.3.1.2 and an emergency voice/alarm communication system in accordance with Section 907.5.2, than use 0.15 inches per occupant.

1010.1.1 SIZE OF DOORS
Provide a minimum clear width of 32 inches measured between the face of the door and the stop, with the door open 90 degrees (1.57 rad).

SECTION 1011.2: WIDTH AND CAPACITY
The width of stairs shall not be less than 44". Stairways serving an occupant load of less than 50 shall have a width of not less than 36 inches. Handrails may project into the required width of stairs by a maximum of 4.5" at each handrail (Section 1014.8).

PYATOK
1611 TELEGRAPH AVE.
SUITE 200
OAKLAND, CA 94612
T. 510.465.7010 | F. 510.465.8575
www.pyatok.com

THE UNITY COUNCIL
1900 FRUITVALE AVE
#2A
OAKLAND, CA 94601

2700 INTERNATIONAL
OAKLAND, CA 94601

STAMP:
LICENSED ARCHITECT
PETER WALLER
C-23557
REGISTERED
4/30/2023
STATE OF CALIFORNIA

ISSUE SCHEDULE

100 SD	5/11/22
50 DD	7/15/22
100 DD	9/16/22
50 CD	11/18/22
PERMIT SET	12/09/22

REVISION SCHEDULE

NO.	ISSUE	DATE

JOB NUMBER:	1937
DRAWN BY:	MA, DV, TN, MO, SP
CHECKED BY:	Checker
ISSUE DATE:	12/09/22
SCALE:	As indicated

TITLE:
CODE DIAGRAM - OCCUPANT LOAD

SHEET:
G0.13

PRELIMINARY - Not for Construction -

© 2019 PYATOK ARCHITECTURE & URBAN DESIGN

12/8/2022 6:21:10 PM

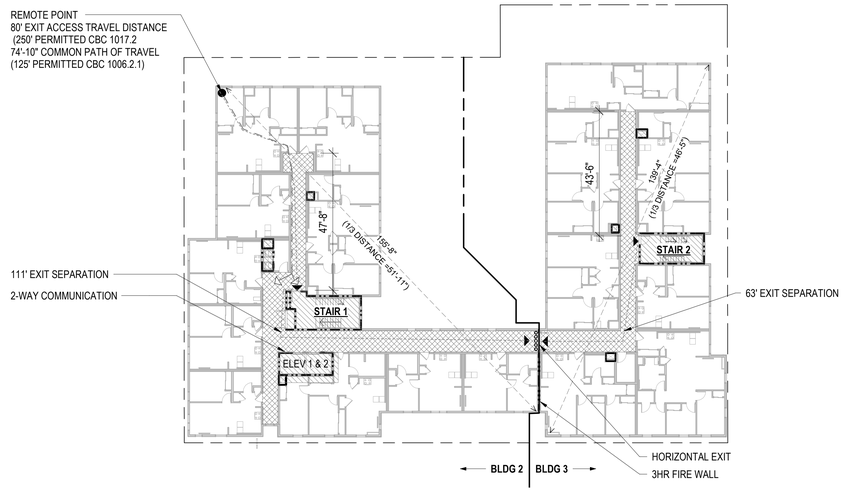

EXITING PLAN - LEVEL 3 (3)
3/64" = 1'-0"

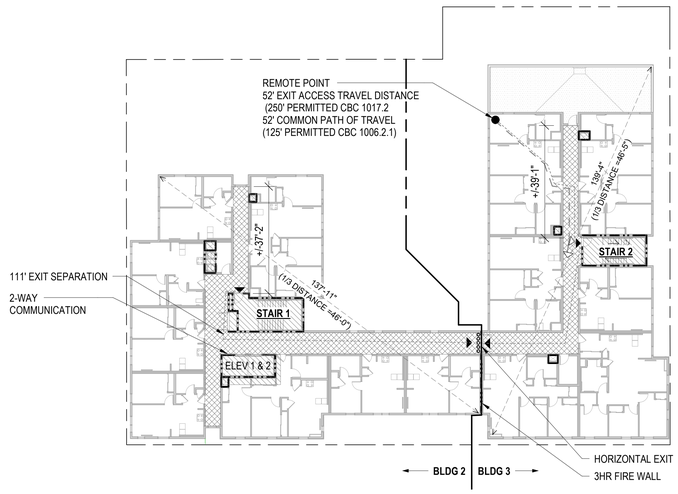

EXITING PLAN - LEVEL 5-6 (5)
3/64" = 1'-0"

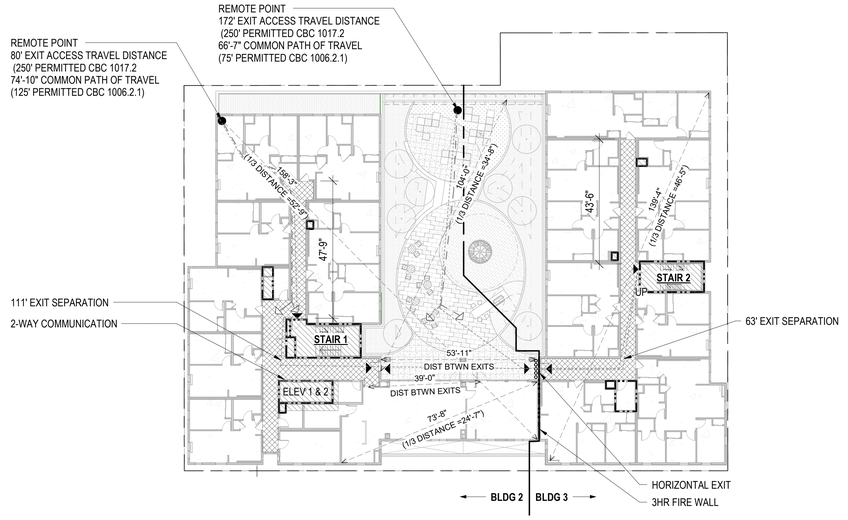

EXITING PLAN - LEVEL 2 (2)
3/64" = 1'-0"

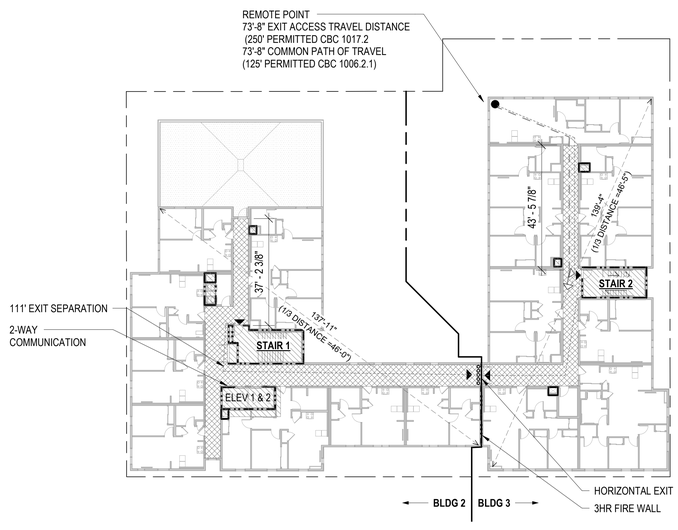

EXITING PLAN - LEVEL 4 (4)
3/64" = 1'-0"

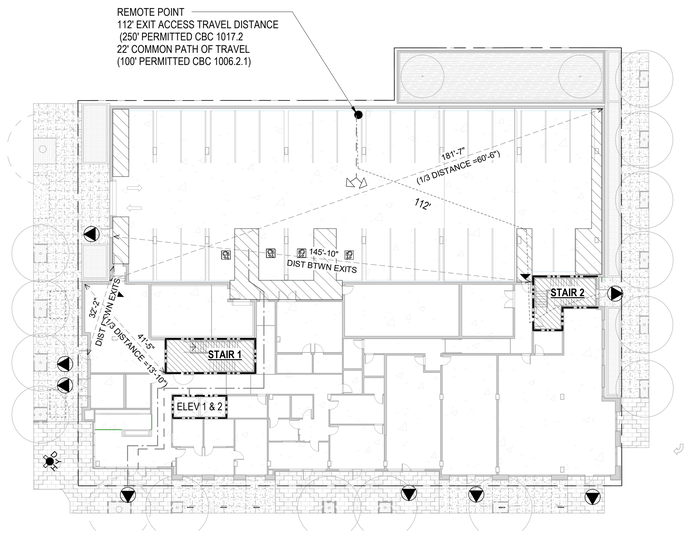

EXITING PLAN - LEVEL 1 (1)
3/64" = 1'-0"

EGRESS GENERAL NOTES

1. ACCESSIBLE PATH OF TRAVEL AS INDICATED ON PLAN IS A BARRIER-FREE ACCESS ROUTE WITHOUT ANY ABRUPT LEVEL CHANGES EXCEEDING 1/2". IF BEVELED AT 1:2 MAXIMUM SLOPE, OR VERTICAL LEVEL CHANGES EXCEEDING 1/4" MAX, AND AT LEAST 48" IN WIDTH. SURFACE IS STABLE, FIRM AND SLIP RESISTANT. CROSS SLOPE DOES NOT EXCEED 2% AND SLOPE IN THEDIRECTION OF TRAVEL IS LESS THAN 5% UNLESS OTHERWISE INDICATED. ACCESSIBLE PATH OF TRAVEL SHALL BE MAINTAINED FREE OF OVERHANGING OBSTRUCTIONS TO 80 " MINIMUM AND PROTRUDING OBJECTS GREATER THAN 4" PROJECTION FROM WALL AN ABOVE 27" AND LESS THAN 80".

2. ALL ACCESSIBLE ROUTES OF TRAVEL TO COMPLY WITH THE FOLLOWING REQUIREMENTS:
   A. 48" MIN. WIDTH FOR WALKS AND SIDEWALKS
   B. 48" MIN. WIDTH FOR CURB RAMPS
   C. 48" MIN. WIDTH FOR RAMPS
   D. 36" MIN. WIDTH FOR CORRIDORS OR HALLWAYS, OR 44" MIN. WIDTH IF SERVING AN OCCUPANT LOAD OF 10 OR MORE
   E. FOR CORRIDORS AND HALLWAYS EXCEEDING 200 FT. IN LENGTH, PROVIDE A 60" MIN. CLEAR WIDTH.
   F. 36" MIN. WIDTH WITHIN A SINGLE-ACCOMODATION TOILET ROOM EXCEPT AT DOORS

3. PER CBC 1005.7.1 DOORS IN ANY POSITION SHALL NOT REDUCE THE REQUIRED WIDTH OF A CORRIDOR MORE THAN 50% (DOES NOT APPLY WITHIN INDIVIDUAL DWELLING UNITS).

4. EXIT ACCESS TRAVEL LIMITATIONS (PER CBC TABLE 1017.2, WITH SPRINKLERS):
   A & R OCCUPANCIES: 250 FT
   B OCCUPANCY: 300 FT
   S-2 OCCUPANCY : 400 FT

5. MINIMUM WIDTH OF EGRESS COMPONENTS: FOR EXIT AND EXIT ACCESS DOORS, SEE G0.13. FOR STAIRS, SEE G0.13, 44" MINIMUM CORRIDOR WIDTH PER CBC 1020.2, 36" MIN CORRIDOR WIDTH WITHIN UNITS PER CBC 1020.2.

6. PER SECTION 1009, ACCESSIBLE MEANS OF EGRESS IS PROVIDED BY ACCESSIBLE ROUTES, INTERIOR EXIT STAIRWAYS, HORIZONTAL EXITS, RAMPS, AND AREAS OF REFUGE, COMPLYING AS APPLICABLE WITH CHAPTERS 11B.

7. IN ACCORDANCE WITH CH 11B-206 AND 11B-402, THE ACCESSIBLE ROUTE CONNECTS ACCESSIBLE PARKING SPACES, SITE ARRIVAL POINTS (MAIN BUILDING ENTRY) AND PUBLIC STREETS AND SIDEWALKS. THE ACCESSIBLE ROUTE ALSO CONNECTS ACCESSIBLE ELEMENTS, MOBILITY UNITS, AS WELL AS COMMON USE FACILITIES AND SPACES.

8. PER SECTION 1009.2.1 ELEVATORS REQUIRED - IN BUILDINGS WHERE A REQUIRED ACCESSIBLE FLOOR IS FOUR OR MORE STORIES ABOVE OR BELOW THE LEVEL OF EXIT DISCHARGE, AT LEAST ONE REQUIRED ACCESSIBLE MEANS OF EGRESS SHALL BE AN ELEVATOR COMPLYING WITH SECTION 1009.4.
   EXCEPTION 1: IN BUILDINGS EQUIPPED THROUGHOUT WITH AN AUTOMATIC SPRINKLER SYSTEM INSTALLED IN ACCORDANCE WITH SECTION 903.3.1.1, THE ELEVATOR SHALL NOT BE REQUIRED ON FLOORS PROVIDED WITH A HORIZONTAL EXIT AND LOCATED AT OR ABOVE THE LEVELS OF EXIT DISCHARGE.

8. PER SECTION 1026.2, HORIZONTAL EXITS - THE SEPARATION BETWEEN BUILDINGS OR REFUGE AREAS CONNECTED BY A HORIZONTAL EXIT SHALL BE PROVIDED BY A FIRE WALL (SECTION 706); FIRE BARRIER (SECTION 707) OR HORIZONTAL ASSEMBLY (SECTION 711) OR BOTH. THE MINIMUM FIRE RESISTANCE-RATING OF THE SEPARATION SHALL BE 2 HOURS. OPENING PROTECTIVES IN HORIZONTAL EXITS SHALL ALSO COMPLY WITHSECTION 716. DUCT AND AIR TRANSFER OPENINGS IN A FIRE WALL OR FIRE BAR-RIER THAT SERVES AS A HORIZONTAL EXIT SHALL ALSO COMPLY WITH SECTION 717. THE HORIZONTAL EXIT SEPARATION SHALL EXTEND VERTICALLY THROUGH ALL LEVELS OF THE BUILDING UNLESS FLOOR ASSEMBLIES HAVE A FIRE-RESISTANCE RATING OF NOT LESS THAN 2 HOURS AND DO NOT HAVE UNPROTECTED OPENINGS. HORIZONTAL EXITS CONSTRUCTED AS FIRE BARRIERS SHALL BE CONTINUOUS FROM EXTERIOR WALL TO EXTERIOR WALL SO AS TO DIVIDE COMPLETELY THE FLOOR SERVED BY THE HORIZONTAL EXIT.

FIRE RATED WALL ASSEMBLIES AND PROTECTION:

1. SHAFT WALLS: SHALL BE FIRE BARRIERS CONSISTING OF 2-HR FIRE RESISTIVE CONSTRUCTION WHEN CONNECTING FOUR STORIES OR MORE PER CBC **713.4** AND 1-HR RESISTIVE CONSTRUCTION WHEN CONNECTING LESS THAN FOUR STORIES.
2. INTERIOR EXIT STAIRWAY ENCLOSURES: SHALL BE FIRE BARRIERS CONSISTING OF 2-HR FIRE RESISTIVE CONSTRUCTION WHEN CONNECTING FOUR STORIES OR MORE AND 1-HR RESISTIVE CONSTRUCTION WHEN CONNECTING LESS THAN FOUR STORIES. PER CBC **707.3.2** AND **1023**.
3. EXTERIOR WALLS (LOAD BEARING): 2-HR WHERE REQUIRED BASED ON FIRE SEPARATION DISTANCE PER CBC TABLE **602** FOR TYPE IIIA CONSTRUCTION.
4. EXTERIOR WALLS (NON-LOAD BEARING): 1-HR OR O HR WHERE REQUIRED BASED ON FIRE SEPARATION DISTANCE PER CBC TABLE **602** FOR TYPE IIIA CONSTRUCTION.
5. DEMISING WALLS: PARTY WALLS SEPARATING DWELLING UNITS SHALL BE FIRE PARTITIONS CONSISTING OF 1-HR FIRE-RESISTIVE CONSTRUCTION AS REQUIRED BY 2019 CBC **420.2.**
6. CORRIDOR WALLS: CORRIDOR WALLS SHALL BE OF 1-HR FIRE-RESISTIVE CONSTRUCTION AS REQUIRED BY 2019 CBC **1020.1.**
7. FIRE WALLS: AT HORIZONTAL EXITS SHALL HAVE 2-HR FIRE-RESISTIVE CONSTRUCTION PER 2019 CBC SECTION **706.**
8. FIRE BARRIERS: AT OCCUPANCY SEPARATIONS SHALL HAVE 2-HR FIRE-RESISTIVE CONSTRUCTION PER 2019 CBC SECTION 707.
9. PRIMARY STRUCTURAL FRAME MEMBERS CONSTRUCTED OF STEEL SHALL MEET REQUIRED FIRE PROTECTION RATINGS USING INTUMESCENT PAINT, PER ARCHITECTURAL DETAILS. REQUIRED RATINGS OF SUCH MEMBERS ARE 1 HOUR IN TYPE IIIA CONSTRUCTION AND 3 HOURS IN TYPE I CONSTRUCTION.
10. FIRE BLOCKING / DRAFT STOPPING SHALL BE INSTALLED IN COMBUSTIBLE CONCEALED SPACES IN ACCORDANCE WITH 2019 CBC SECTION 718. FIRE BLOCKING SHALL BE PROVIDED IN CONCEALED SPACES OF STUD WALLS AND PARTITIONS, INCLUDING FURRED SPACES; VERTICALLY AT THE CEILING AND FLOOR LEVELS AND HORIZONTALLY AT INTERVALS NOT EXCEEDING 10 FEET.
11. HORIZONTAL FIRE RESISTANCE RATED ASSEMBLIES SHALL BE CONTINUOUS IN ACCORDANCE WITH CBC SECTION **711.4** AND ALL GYPSUM BOARD WALL LAYERS SHALL EXTEND TO THE CEILING LAYERS OF HORIZONTAL ASSEMBLIES.

EXITING/PATH OF TRAVEL LEGEND

- 1-HR RATED EXIT CORRIDOR
- 2-HR VERTICAL ENCLOSURES
- COMMON PATH OF TRAVEL
- ACCESSIBLE PATH OF TRAVEL
- x.xx' EXITING / TRAVEL DISTANCE
- EXIT DISCHARGE
- EXIT ARROW FROM SPACE
- ACCESS TO TWO DISTINCT EXITS
- 1-HOUR RATED CONSTRUCTION
- 2-HOUR RATED CONSTRUCTION
- HORIZONTAL EXIT
- 25'-0" DIST BTWN EXITS — DISTANCE BETWEEN EXITS
- SPACE DIAGONAL MEASURMENT
- 20'-1" (1/3 DISTANCE =6'-8") — 1/3 OF DIAGONAL MEASURMENT

PYATOK
1611 TELEGRAPH AVE.
SUITE 200
OAKLAND, CA 94612
T. 510.465.7010 | F. 510.465.8575
www.pyatok.com

THE UNITY COUNCIL
1900 FRUITVALE AVE
#2A
OAKLAND, CA 94601

2700 INTERNATIONAL
OAKLAND, CA 94601

STAMP:
LICENSED ARCHITECT — PETER WALLER — C-33564 — 4/30/2023 — STATE OF CALIFORNIA

ISSUE SCHEDULE

100 SD	5/11/22
50 DD	7/15/22
100 DD	9/16/22
50 CD	11/18/22
PERMIT SET	12/09/22

REVISION SCHEDULE

NO.	ISSUE	DATE

JOB NUMBER:	1937
DRAWN BY:	MA, DV, TN, MO, SP
CHECKED BY:	Checker
ISSUE DATE:	12/09/22
SCALE:	As indicated

TITLE:
CODE DIAGRAM -EXITING

SHEET:
G0.14

PRELIMINARY - Not for Construction -

© 2019 PYATOK ARCHITECTURE & URBAN DESIGN

12/8/2022 6:21:19 PM

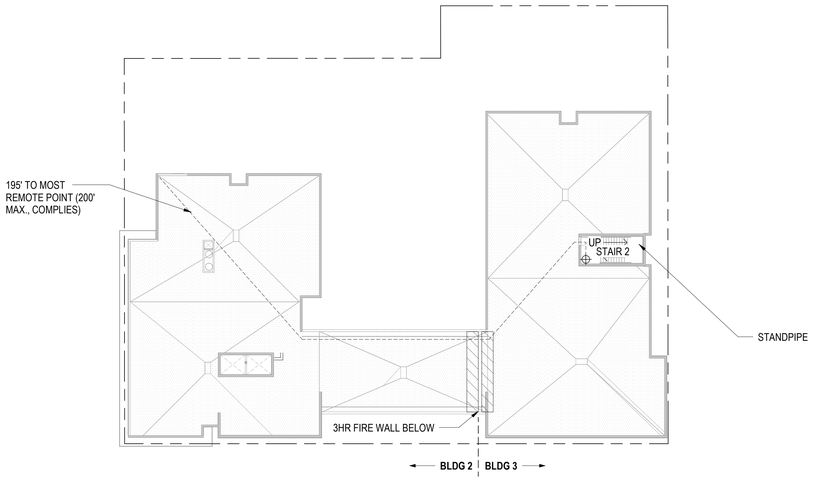

FIRE ACCESS PLAN - ROOF 6
3/64" = 1'-0"

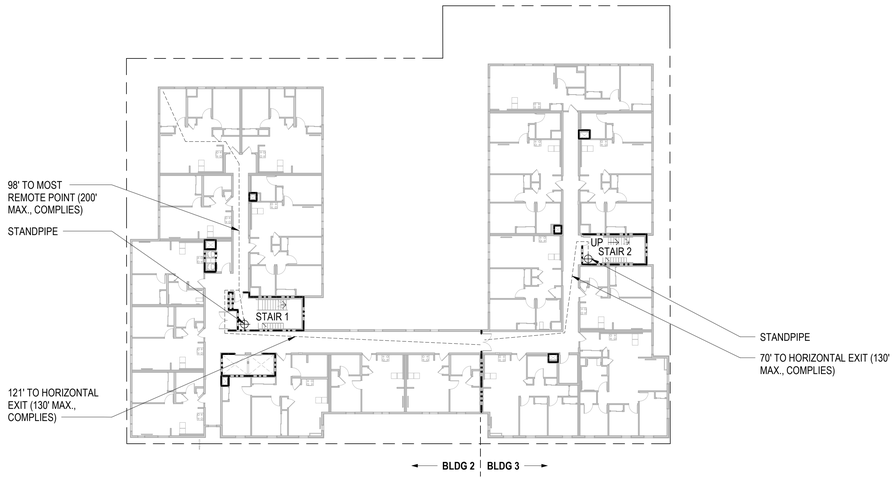

FIRE ACCESS PLAN - LEVEL 3 3
3/64" = 1'-0"

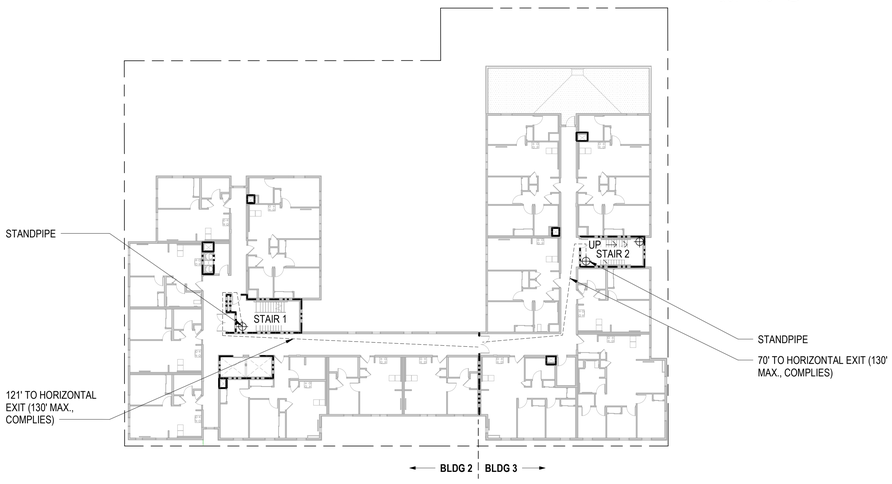

FIRE ACCESS PLAN - LEVEL 5-6 5
3/64" = 1'-0"

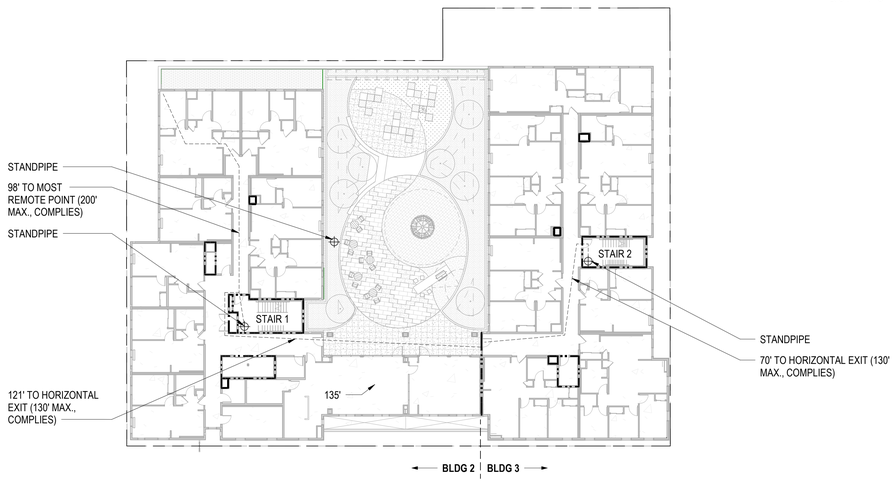

FIRE ACCESS PLAN - LEVEL 2 2
3/64" = 1'-0"

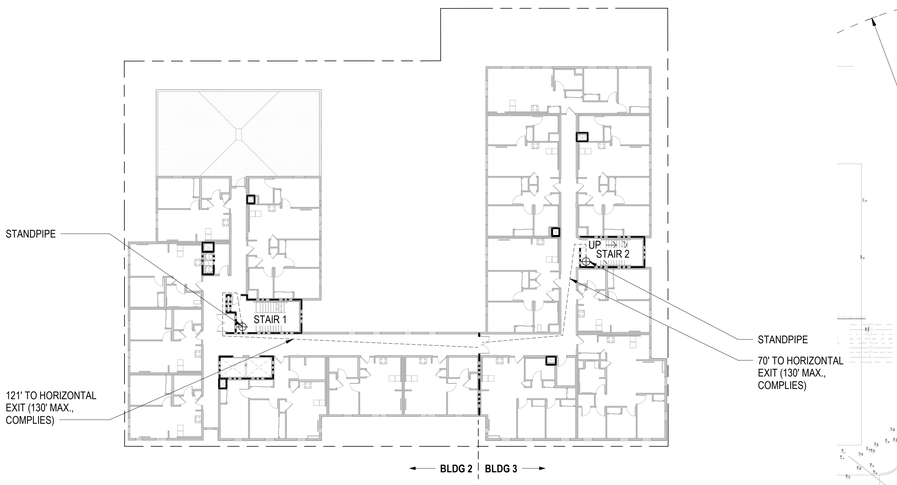

FIRE ACCESS PLAN - LEVEL 4 4
3/64" = 1'-0"

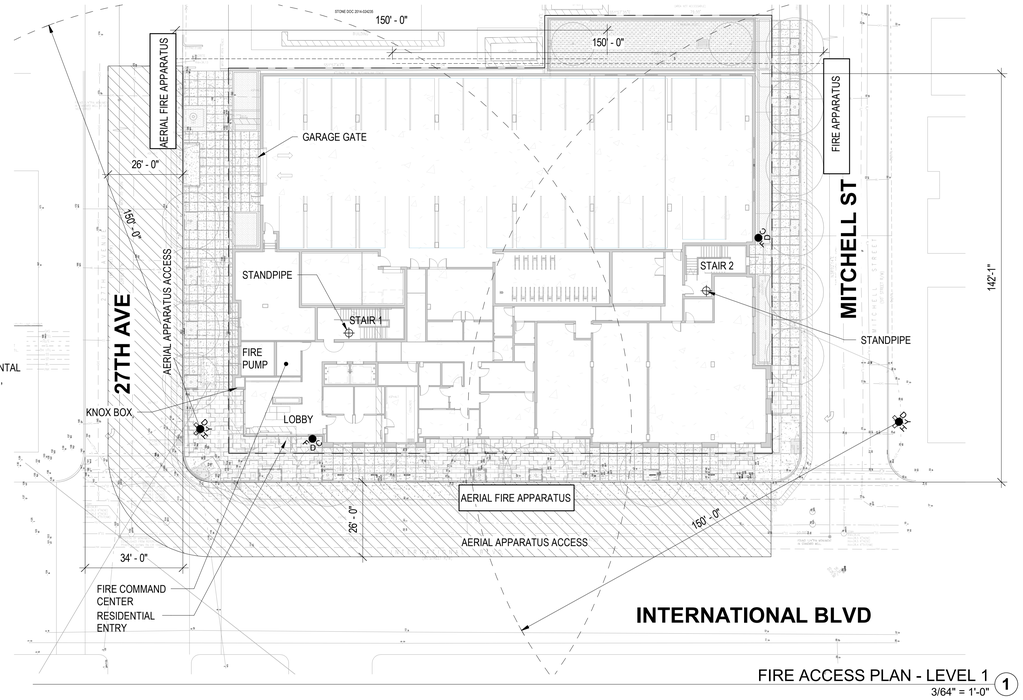

FIRE ACCESS PLAN - LEVEL 1 1
3/64" = 1'-0"

FIRE AND LIFE SAFETY NOTES:

1. MAIN FIRE ALARM AND ANNUNCIATOR PANEL SHALL BE PROVIDED IN LOCATION WITHIN SIGHT OF THE MAIN LOBBY DOORS AND NEXT TO ANY EMERGENCY TWO-WAY COMMUNICATION SYSTEM USED TO SATISFY CBC 1009.6.5 FOR EGRESS ACCESSIBILITY PURPOSES.
2. VISUAL DEVICES TIED TO FIRE ALARM SYSTEM THROUGHOUT.
3. KNOX BOXES TO BE PROVIDED AT MAIN BUILDING POINTS OF ENTRY. EXACT LOCATION TO BE DETERMINED IN COORDINATION WITH THE FIRE DEPARTMENT.
4. THE BUILDING ADDRESS SHALL BE PLAINLY VISIBLE FROM THE STREET FRONTING THE PROPERTY. THE LETTERING SHALL BE SIZED, INSTALLED AND LIT ACCORDING TO CBC 502.1. ADDITIONAL ADDRESS NUMBERS MAY BE REQUIRED PER FIRE CODE OFFICIAL TO FACILITATE EMERGENCY RESPONSE. UNIT NUMBERS OR LETTERS IN A BUILDING WITH MIXED OCCUPANCY SHALL BE AFFIXED TO THE DOOR ENTERING THE SPACE OR LOCATED ON THE WALL NEAR THE ENTRANCE AND VISIBLE FROM THE ENTRANCE.
5. THE MEANS OF EGRESS, INLCLUDING ALL EXITS & EGRESS PATHS EXTENDING TO A PUBLIC RIGHT OF WAY, SHALL HAVE LIGHTING WITH AN INTENSITY OF NOT LESS THAN 1 FOOT CANDLE AT THE FLOOR LEVEL.
6. THE POWER SUPPLY FOR EXIT ILLUMINATION SHALL BE PROVIDED BY THE BUILDING'S ELECTRICAL SYSTEM. IN THE EVENT OF BUILDING SYSTEM FAILURE, ILLUMINATION SHALL BE PROVIDED BY AN EMERGENCY SYSTEM.
7. EXTERIOR EMERGENCY LIGHTING AND FIRE ALARM DEVICES REQUIRED IN EXTERIOR ASSEMBLY AREAS WITH MAXIMUM OCCUPANTLOAD SIGNAGE POSTED
8. EXIT SIGNAGE SHALL BE PROVIDED WHERE REQUIRED PER CBC SECTION 1013, TO INDICATE PATH OF EGRESS TRAVEL. COMPLY WITH CBC SECTION 1013 FOR REQUIREMENTS REGARDING GRAPHICS, ILLUMINATION AND POWER SUPPLY.
9. PROVIDE SMOKE DETECTORS AND POWER SOURCE PER CBC 907.2.10.2 AND NFPA 72, 2019. SMOKE DETECTOR SHALL SOUND AN ALARM AUDIBLE IN ALL SLEEPING AREAS OF THE DWELLING UNIT IN WHICH THEY ARE LOCATED.
10. PROVIDE CARBON MONOXIDE ALARMS PER 2019 CBC SECTION 915.1.
11. A SMOKE DETECTOR SHALL BE PROVIDED AT ALL REQUIRED FIRE RATED DOORS EQUIPPED WITH MAGNETIC HOLD OPEN DEVICES. LOCATE SMOKE DETECTOR WITHIN 5'-0" OF THE DOOR.
12. AN AUTOMATIC SHUT OFF ON ANY SINGLE SYSTEM THAT PROVIDES HEATING OR COOLING AIR IN EXCESS OF 2,000 CFM SHALL BE PROVIDED. SHUT OFF TO BE ACTIVATED BY 'DUCT' SMOKE DETECTORS.
13. AN AUTOMATIC SPRINKLER SYSTEM IS REQUIRED PER 2019 CBC 903.2.8 AND SHALL CONFORM TO NFPA 13 AS AMENDED BY CBC
14. CONTRACTOR IS RESPONSIBLE FOR ENSURING THE DESIGN AND INSTALLATION OF FIRE SPRINKLER SYSTEM MEETS THE REQUIREMENTS OF ALL APPLICABLE CODES, INLCUDING 2019 EDITIONS OF NFPA 13 SPRINKLERS, NFPA 14 FOR STANDPIPES, NFPA 72 FIRE ALARM, NFPA 20 FIRE PUMPS, AND NFPA 24 FOR SPRINKLER UNDERGROUND.
15. FLOOR VALVES AND FLOW SWITCHES FOR SPRINKLER SYSTEM REQUIRED AT EACH LEVEL PER CBC 903.3.9
16. INSTALL CLASS I STANDPIPE SYSTEM AS REQUIRED PER CBC 905.3 AND NFPA 14.
17. PROVIDE SPRINKLER HEAD ON TOP OF WASTE CHUTES, IN TERMINATION ROOMS, AND AT ALTERNATE FLOOR LEVELS WITHIN WASTE CHUTES.
18. SPRINKLER PROTECTION IS REQUIRED UNDER COMBUSTIBLE BALCONIES.
19. SPRINKLER MONITORING IS REQUIRED PER CBC 903.4
20. UNITS DESIGNATED AS "COMMUNICATION ACCESSIBLE" (SEE PLANS) REQUIRE HORN/STROBE NOTIFICATION DEVICE IN ALL ROOMS.
21. PROVIDE FIRE EXTINGUISHING SYSTEM PER FIRE DEPARTMENT REQUIREMENTS. SYSTEM TO COMPLY WITH ALL STATE AND LOCAL REQUIREMENTS.
22. FIRE EXTINGUISHERS ARE REQUIRED PER CBC 906. FIRE EXTINGUISHERS IN THE GARAGE AND RESIDENTIAL AREAS SHOULD BE SIZED AT 2A:20BC.
23. PORTABLE FIRE EXTINGUISHEERS (PFE) ARE REQUIRED PER CBC 906. PER TABLE 906.3(1), MAXIMUM DISTANCE TRAVELED TO REACH AN EXTINGUISHER IS 75'. LAYOUT TO ALSO COMPLY MAXIMUM AREA COVERED.
24. SEE PLANS FOR EXTINGUISHER CABINET LAYOUT. PER CBC 906.9.1, INSTALL EXTINGUISHERS SO THAT THEIR TOPS ARE NOT MORE THAN 5'-0" AFF.
25. EMERGENCY RESPONDER RADIO COVERAGE SYSTEMS (ERRCS) SHALL BE INSTALLED, TESTED, AND MAINTAINED IN ACCORDANCE WITH ANNEX G OF THE 2015 EDITION OF THE NFPA 5000 STANDARD AND CFC 510.4. UPON COMPLETION OF BUILDING CONSTRUCTION, ERRCS TEST SHALL BE CONDUCTED PER STANDARD, IF IT FAILS, THEN AN ERRCS SHALL BE INSTALLED. CONSTRUCTION PLANS FOR THE RADIO COVERAGE SYSTEMS SHALL BE SUBMITTED TO THE FIRE DEPARTMENT PRIOR TO INSTALLATION.
26. REFER TO ASSEMBLY NOTES FOR FIRE RATED WALL ASSEMBLIES AND PROTECTION.

FIRE ACCESS LEGEND

- FIRE HOSE REACH
- STANDPIPE / WHARF HYDRANT / FIRE HYDRANT
- FDC
- FIRE HYDRANT

NOTES

CONSTRUCTION TYPE
LEVEL 1 = TYPE I-A
LEVEL 2-6 = TYPE III-A

PYATOK
1611 TELEGRAPH AVE.
SUITE 200
OAKLAND, CA 94612
T. 510.465.7010 | F. 510.465.8575
www.pyatok.com

THE UNITY COUNCIL
1900 FRUITVALE AVE
#2A
OAKLAND, CA 94601

2700 INTERNATIONAL
OAKLAND, CA 94601

STAMP:

LICENSED ARCHITECT
PETER WALLER
C-23551
4/30/2023
STATE OF CALIFORNIA

ISSUE SCHEDULE

100 SD	5/11/22
50 DD	7/15/22
100 DD	9/16/22
50 CD	11/18/22
PERMIT SET	12/09/22

REVISION SCHEDULE

NO.	ISSUE	DATE

JOB NUMBER:	1937
DRAWN BY:	MA, DV, TN, MO, SP
CHECKED BY:	Checker
ISSUE DATE:	12/09/22
SCALE:	As indicated

TITLE:
CODE DIAGRAM -FIRE ACCESS PLAN

SHEET:
G0.15

PRELIMINARY - Not for Construction -

© 2019 PYATOK ARCHITECTURE & URBAN DESIGN

12/8/2022 6:21:29 PM

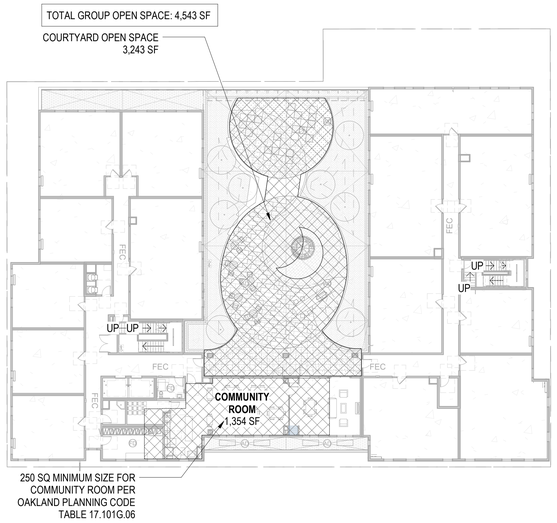

OPEN SPACE DIAGRAM - LEVEL 2 (8)
3/64" = 1'-0"

PER OAKLAND MUNICIPAL CODE 15.04.3.2285 – CBC SECTIONS 3201.4, 3202.1, AND 3202.2 AMENDED: UNENCLOSED BALCONIES, ARCHITECTURAL FEATURES, CANOPIES OVER ENTRANCE DOORS, AND AWNINGS OVER WINDOWS MAY CANTILEVER OVER THE PUBLIC RIGHT-OF-WAY BY NOT MORE THAN ONE INCH HORIZONTALLY FOR EACH ONE INCH OF VERTICAL CLEARANCE EXCEEDING EIGHT FEET, MEASURED FROM THE HIGHER OF FINISHED GRADE OR PUBLIC WALKING SURFACE TO THE LOWEST OVERHEAD ELEMENT OF THE ENCROACHMENT. THE ENCROACHMENT SHALL NOT PROJECT MORE THAN FOUR FEET. PROJECTING STRUCTURAL ELEMENTS SHALL BE FIRE- RESISTIVE CONSTRUCTION OR NONCOMBUSTIBLE

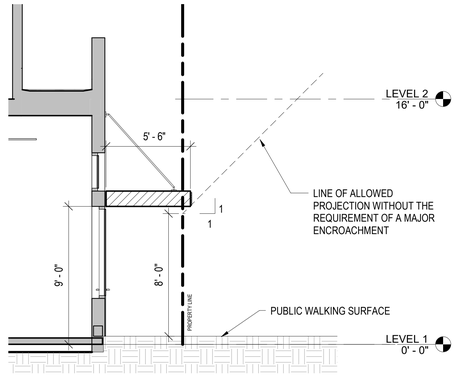

WALL SECTION - ALLOWABLE PROJECTIONS (7)
1/4" = 1'-0"

PER THE OAKLAND PLANNING CODE SECTION 17.104.20, THE MAXIMUM AGGREGATE AREA OF DISPLAY SURFACE OF ALL SIGNAGE ON CORNER LOTS IS 0.5 SQUARE FEET PER 1.0 FOOT OF LOT FRONTAGE, AND SHALL NOT EXCEED 200 SQUARE FEET. THE AGGREGATE SHALL INCLUDE ONLY ONE SIDE OF A DOUBLE FACED SIGN. THE MAXIMUM HEIGHT OF ANY SIGN MAY NOT EXCEED THE HEIGHT OF THE WALL THAT IT IS ATTACHED TO.

LOT FRONTAGE = 152.4' + 189' + 134' = 475.4' x 0.5 = 237.8' MAX. AGGREGATE SIGNAGE AREA = 200 SQUARE FEET
PROPOSED SIGNAGE AREA
7 SF + 31.8 SF + 4.8 SF + (5.8 SF)*3 + (3.8 SF)*4 = 66.2 SF

*PLEASE NOTE THAT THE SIGNAGE ELEVATIONS ARE DIAGRAMATIC. THEY ARE PROVIDED TO INDICATE APPROXIMATE SIZE AND MOUNTING METHOD. FINAL SIGNAGE DESIGN WILL BE COMPLETED AT A LATER DATE AND PROVIDED TO THE PLANNING DEPARTMENT FOR APPROVAL.

SEE BUILDING ELEVATIONS FOR ADDITIONAL LOCATION AND MOUNTING INFORMATION.

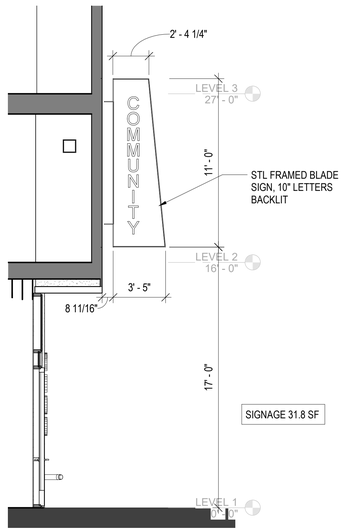

SIGNAGE - RESIDENTIAL BLADE SIGN (#2) (6)
1/4" = 1'-0"

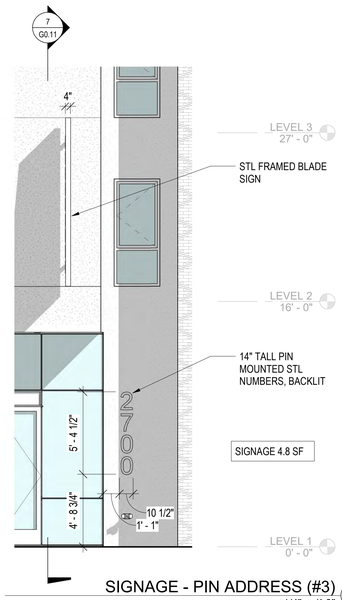

SIGNAGE - PIN ADDRESS (#3) (5)
1/4" = 1'-0"

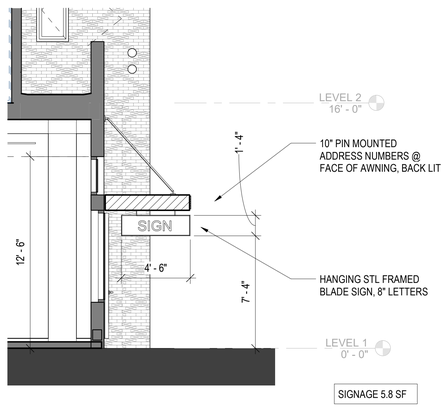

SIGNAGE - BLADE SIGN (#4) (3)
1/4" = 1'-0"

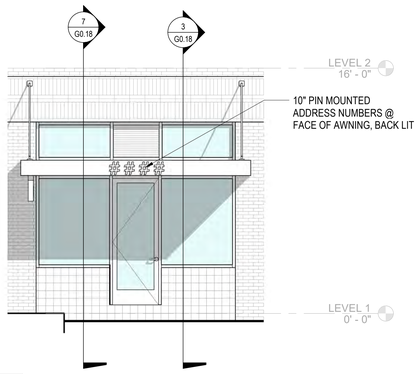

*NOTE: SIGNAGE #5 IS SIMILAR FONT/SIZE, DIE-CUT REFLECTIVE LETTERS ADHERED TO GLAZING

SIGNAGE - ADDRESS AWNING (#1) (4)
1/4" = 1'-0"

OAKLAND PLANNING CODE SECTION 17.35.03, NOTE 9:

9. This percentage of transparency is only required for principal buildings that include ground floor Nonresidential Facilities, and only applies to facades facing the principal street. The regulations only apply to facades located within twenty (20) feet of a street frontage. The area of required transparency is between two (2) feet and nine (9) feet in height of the ground floor and must be comprised of clear, non-reflective windows that allow views out of indoor commercial space, residential space, or lobbies (see Illustration for Table 17.35.03 [Additional Regulation 9], below). Areas required for garage doors shall not be included in the calculation of facade area (see Note 12 for limitations on the location of parking access). Glass block does not qualify as a transparent window. Exceptions to this regulation may be allowed by the Planning Director for unique facilities such as convention centers, gymnasiums, parks, gas stations, theaters and other similar facilities.

Illustration for Table 17.35.03 [Additional Regulation 9]
*for illustration purposes only

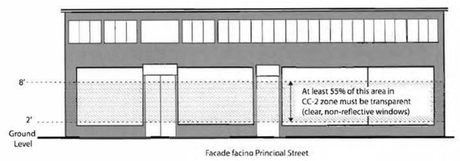

GLAZING REQUIRED = (7' x 184') x 55% = 708.4 SF
GLAZING PROVIDED = 751 SF, THEREFORE COMPLIANT

ZONING CODE - TRANSPARENCY DIAGRAM ON INTERNATIONAL BLVD (2)
1/16" = 1'-0"

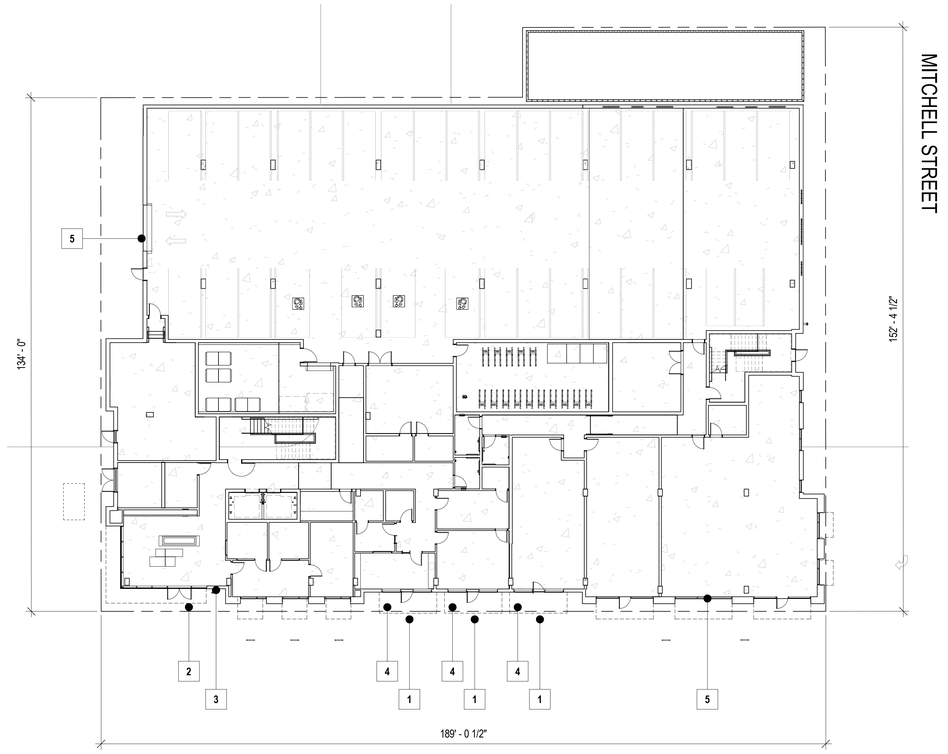

INTERNATIONAL BOULEVARD

SIGNAGE PLAN (1)
1/16" = 1'-0"

PYATOK
1611 TELEGRAPH AVE.
SUITE 200
OAKLAND, CA 94612
T. 510.465.7010 | F. 510.465.8575
www.pyatok.com

THE UNITY COUNCIL
1900 FRUITVALE AVE
#2A
OAKLAND, CA 94601

2700 INTERNATIONAL

OAKLAND, CA 94601

STAMP:
LICENSED ARCHITECT
PETER WALLER
C-23551
4/30/2023
STATE OF CALIFORNIA

ISSUE SCHEDULE

100 SD	5/11/22
50 DD	7/15/22
100 DD	9/16/22
50 CD	11/18/22
PERMIT SET	12/09/22

REVISION SCHEDULE

NO.	ISSUE	DATE

JOB NUMBER:	1937
DRAWN BY:	MA, DV, TN, MO, SP
CHECKED BY:	Checker
ISSUE DATE:	12/09/22
SCALE:	As indicated

TITLE:
ZONING DIAGRAMS, SIGNAGE & OPEN SPACE

SHEET:
G0.18

PRELIMINARY - Not for Construction -

© 2019 PYATOK ARCHITECTURE & URBAN DESIGN

12/8/2022 6:21:37 PM

DOORS (AT COMMON USE AREAS)
FOR DWELLING UNIT DOORS, SEE G0.36 *CBC 2019 11B - ACCESSIBILITY - DWELLING UNITS.*

DOORS CONT'D (CBC 11B-404)

DOOR OPENINGS SHALL PROVIDE A CLEAR WIDTH OF 32 INCHES MINIMUM. CLEAR OPENINGS OF DOORWAYS WITH SWINGING DOORS SHALL BE MEASURED BETWEEN THE FACE OF THE DOOR AND THE STOP, WITH THE DOOR OPEN 90 DEGREES.

DOOR AND GATE HARDWARE
- HANDLES, PULLS, LATCHES, LOCKS, AND OTHER OPERABLE PARTS OF SUCH HARDWARE SHALL BE 34 INCHES MINIMUM AND 44 INCHES MAXIMUM ABOVE THE FINISH FLOOR OR GROUND. WHERE SLIDING DOORS ARE IN THE FULLY OPEN POSITION, OPERATING HARDWARE SHALL BE EXPOSED AND USABLE FROM BOTH SIDES. ***11B ONLY***
- DOOR CLOSERS AND GATE CLOSERS SHALL BE ADJUSTED SO THAT FROM AN OPEN POSITION OF 90 DEGREES, THE TIME REQUIRED TO MOVE THE DOOR TO A POSITION OF 12 DEGREES FROM THE LATCH IS 5 SECONDS MINIMUM.
- DOOR AND GATE SPRING HINGES SHALL BE ADJUSTED SO THAT FROM THE OPEN POSITION OF 70 DEGREES, THE DOOR OR GATE SHALL MOVE TO THE CLOSED POSITION IN 1.5 SECONDS MINIMUM.
- THE FORCE FOR PUSHING OR PULLING OPEN A DOOR OR GATE OTHER THAN FIRE DOORS SHALL BE AS FOLLOWS:
  1. INTERIOR HINGED DOORS AND GATES: 5 POUNDS MAXIMUM.
  2. SLIDING OR FOLDING DOORS: 5 POUNDS MAXIMUM.
  3. EXTERIOR HINGED DOORS: 5 POUNDS MAXIMUM.
  4. FIRE DOORS: 15 POUNDS MAXIMUM.

  *THESE FORCES DO NOT APPLY TO THE FORCE REQUIRED TO RETRACT LATCH BOLTS OR DISENGAGE OTHER DEVICES THAT HOLD THE DOOR OR GATE IN A CLOSED POSITION.
- SWINGING DOOR AND GATE SURFACES WITHIN 10 INCHES OF THE FINISH FLOOR OR GROUND MEASURED VERTICALLY SHALL HAVE A SMOOTH SURFACE ON THE PUSH SIDE EXTENDING THE FULL WIDTH OF THE DOOR OR GATE.
- DOORS, GATES, AND SIDE LIGHTS ADJACENT TO DOORS OR GATES, CONTAINING ONE OR MORE GLAZING PANELS THAT PERMIT VIEWING THROUGH THE PANELS SHALL HAVE THE BOTTOM OF AT LEAST ONE GLAZED PANEL LOCATED 43 INCHES MAXIMUM ABOVE THE FINISH FLOOR.

EXCEPTION:
- GLAZING PANELS WITH THE LOWEST PART MORE THAN 66 INCHES FROM THE FINISH FLOOR OR GROUND SHALL NOT BE REQUIRED TO COMPLY WITH CBC SECTION 11B-404.2.11.

MANEUVERING CLEARANCES AT MANUAL SWINGING DOORS AND GATES DOORS

MANEUVERING CLEARANCES AT DOORWAYS WITHOUT DOORS, SLIDING DOORS, GATES AND FOLDING DOORS

MANEUVERING CLEARANCES AT RECESSED DOORS AND GATES

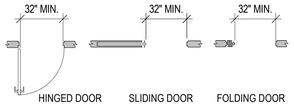

CLEAR WIDTH OF DOORWAYS

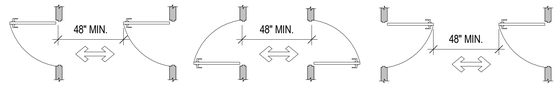

DOORS IN SERIES AND GATES IN SERIES

STAIRWAYS (CBC 11B-504)

TREADS AND RISERS ***11B ONLY***
- ALL STEPS ON A FLIGHT OF STAIRS SHALL HAVE UNIFORM RISER HEIGHTS AND UNIFORM TREAD DEPTHS. RISERS SHALL BE 4 INCHES HIGH MINIMUM AND 7 INCHES HIGH MAXIMUM. TREADS SHALL BE 11 INCHES DEEP MINIMUM.

OPEN RISERS
- OPEN RISERS ARE NOT PERMITTED.

TREAD SURFACE
- STAIR TREADS SHALL COMPLY WITH CBC 1011.5.2, AND 1115A OR 11B-504. CHANGES IN LEVEL ARE NOT PERMITTED.

CONTRASTING STRIPE
- INTERIOR STAIRS SHALL HAVE THE UPPER APPROACH AND LOWER TREAD MARKED BY A STRIPE PROVIDING CLEAR VISUAL CONTRAST. EXTERIOR STAIRS SHALL HAVE THE UPPER APPROACH AND ALL TREADS MARKED BY A STRIPE PROVIDING CLEAR VISUAL CONTRAST. THE STRIPE SHALL BE A MINIMUM OF 2 INCHES WIDE TO A MAXIMUM OF 4 INCHES WIDE PLACED PARALLEL TO AND NOT MORE THAN 1 INCH FROM THE NOSE OF THE STEP OR UPPER APPROACH. THE STRIPE SHALL EXTEND THE FULL WIDTH OF THE OF THE STEP OR UPPER APPROACH AND SHALL BE OF MATERIAL THAT IS AT LEAST AS SLIP RESISTANT AS THE OTHER TREADS OF THE STAIR. A PAINTED STRIPE SHALL BE ACCEPTABLE. GROOVES SHALL NOT BE USED TO SATISFY THIS REQUIREMENT.

NOSINGS ***11B ONLY***
- THE RADIUS OF CURVATURE AT THE LEADING EDGE OF THE TREAD SHALL BE 1/2 INCH MAXIMUM. NOSINGS THAT PROJECT BEYOND RISERS SHALL HAVE THE UNDERSIDE OF THE LEADING EDGE CURVED OR BEVELED. RISERS SHALL BE PERMITTED TO SLOPE UNDER THE TREAD AT AN ANGLE OF 30 DEGREES MAXIMUM FROM VERTICAL. THE PERMITTED PROJECTION OF THE NOSING SHALL EXTEND 1 1/4 INCHES MAXIMUM OVER THE TREAD BELOW.

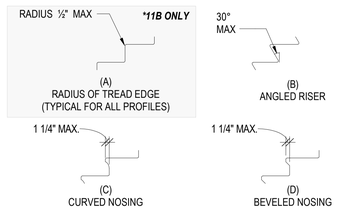

STAIR NOSINGS

RAMPS (CBC 11B-405)

SLOPE
RAMP RUNS SHALL HAVE A RUNNING SLOPE NOT STEEPER THAN 1:12.

CROSS SLOPE
CROSS SLOPE OF RAMP RUNS SHALL NOT BE STEEPER THAN 1:48.

CLEAR WIDTH
- THE CLEAR WIDTH OF A RAMP SHALL BE 48 INCHES.
  EXCEPTIONS:
  - HANDRAILS MAY PROJECT INTO THE REQUIRED CLEAR WIDTH OF THE RAMP AT EACH SIDE BY 3 1/2 INCHES MAXIMUM.
  - THE CLEAR WIDTH OF RAMPS IN RESIDENTIAL USES SERVING AN OCCUPANT LOAD OF 50 OR LESS SHALL BE 36" MINIMUM BETWEEN HANDRAILS.

RISE
THE RISE FOR ANY RAMP RUN SHALL BE 30 INCHES MAXIMUM.
LANDINGS: RAMPS SHALL HAVE LANDINGS AT THE TOP AND THE BOTTOM OF EACH RAMP RUN.

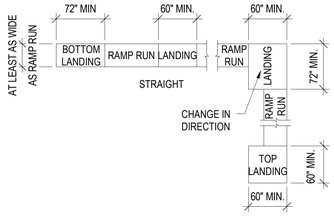

RAMP LANDINGS

SLOPE
- LANDINGS SHALL HAVE SLOPE NO STEEPER THAN 1:48. CHANGES IN LEVEL ARE NOT PERMITTED.

WIDTH
- THE LANDING CLEAR WIDTH SHALL BE AT LEAST AS WIDE AS THE WIDEST RAMP RUN LEADING TO THE LANDING.

LENGTH
- THE LANDING CLEAR LENGTH SHALL BE 60 INCHES LONG MINIMUM.

CHANGE IN DIRECTION
- RAMPS THAT CHANGE DIRECTION BETWEEN RUNS AT LANDINGS SHALL HAVE A CLEAR LANDING 60 INCHES MINIMUM BY 72 INCHES MINIMUM IN THE DIRECTION OF DOWNWARD TRAVEL FROM THE UPPER RAMP RUN.

DOORWAYS
- WHERE DOORWAYS ARE LOCATED ADJACENT TO A RAMP LANDING, MANEUVERING CLEARANCES REQUIRED SHALL BE PERMITTED TO OVERLAP THE REQUIRED LANDING AREA:
  1. DOORS FULLY OPEN SHALL NOT REDUCE THE REQUIRED RAMP LANDING BY MORE THAN 3 INCHES.
  2. DOORS IN ANY POSITION SHALL NOT REDUCE THE MINIMUM DIMENSION OF THE RAMP LANDING TO LESS THAN 42 INCHES.

HANDRAILS ***11B ONLY***
- RAMP RUNS SHALL HAVE HANDRAILS COMPLYING WITH CBC 11B-505.

EDGE PROTECTION
- SHALL BE PROVIDED ON EACH SIDE OF RAMP RUNS AND EACH SIDE OF RAMP LANDINGS. A CURB 2 INCHES HIGH MINIMUM OR BARRIER SHALL BE PROVIDED THAT PREVENTS THE PASSAGE OF A 4INCH DIAMETER SPHERE. TO PREVENT WHEEL ENTRAPMENT THE CURB OR BARRIER SHALL PROVIDE A CONTINUOUS AND UNINTERRUPTED BARRIER ALONG THE LENGTH OF THE RAMP.

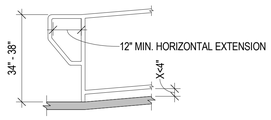

CURB OR BARRIER EDGE PROTECTION

HANDRAILS (CBC 11B-505)

HANDRAILS SHALL BE PROVIDED ON BOTH SIDES OF STAIRS AND RAMPS.
EXCEPTIONS:
- IN ASSEMBLY AREAS, HANDRAILS SHALL NOT BE REQUIRED ON BOTH SIDE OF AISLE RAMP WHERE A HANDRAIL IS PROVIDED AT EITHER SIDE OR WITHIN THE AISLE WIDTH.
- CURB RAMPS DO NOT REQUIRE HANDRAILS.
- AT DOOR LANDINGS, HANDRAILS ARE NOT REQUIRED WHEN A RAMP RUN IS LESS THAN 6 INCHES IN RISE OR 72 INCHES IN LENGTH.
- STAIRWAYS WITHIN DWELLING UNITS ARE PERMITED TO HAVE A HANDRAIL ON ONE SIDE ONLY (CBC 1011.11, EXCEPTION 1.)

CONTINUITY . HANDRAILS SHALL BE CONTINUOUS WITHIN THE FULL LENGTH OF EACH STAIR FLIGHT OR RAMP RUN. INSIDE HANDRAILS ON SWITCHBACK OR DOGLEG STAIRS AND RAMPS SHALL BE CONTINUOUS BETWEEN FLIGHTS OR RUNS. IN ASSEMBLY AREAS, RAMP HANDRAILS ADJACENT TO SEATING OR WITHIN THE AISLE ARE NOT REQUIRED TO BE CONTINUOUS.

HEIGHT
TOP OF GRIPPING SURFACES OF HANDRAILS SHALL BE 34 INCHES MINIMUM AND 38 INCHES MAXIMUM VERTICALLY ABOVE WALKING SURFACES, STAIR NOSINGS, AND RAMP SURFACES. HANDRAILS SHALL BE AT A CONSISTENT HEIGHT ABOVE WALKING SURFACES, STAIR NOSINGS, AND RAMP SURFACES.

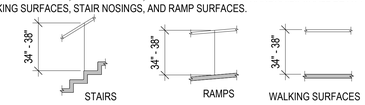

HANDRAIL HEIGHT

CLEARANCE BETWEEN HANDRAIL GRIPPING SURFACES AND ADJACENT SURFACES SHALL BE 1 1/2 INCHES MINIMUM

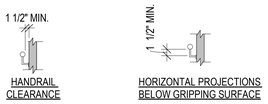

GRIPPING SURFACE
HANDRAIL GRIPPING SURFACES SHALL BE CONTINUOUS ALONG THEIR LENGTH AND SHALL NOT BE OBSTRUCTED ALONG THEIR TOPS OR SIDES. WHERE PROVIDED, HORIZONTAL PROJECTIONS SHALL OCCUR 1 1/2 INCHES MINIMUM BELOW THE BOTTOM OF THE HANDRAIL GRIPPING SURFACE.

CIRCULAR CROSS SECTION
HANDRAIL GRIPPING SURFACES WITH A CIRCULAR CROSS SECTION SHALL HAVE AN OUTSIDE DIAMETER OF 1 1/4 INCHES MINIMUM AND 2 INCHES MAXIMUM.

SURFACES
HANDRAIL GRIPPING SURFACES AND ANY SURFACES ADJACENT TO THEM SHALL BE FREE OF SHARP OR ABRASIVE ELEMENTS AND SHALL HAVE ROUNDED EDGES.

FITTINGS
HANDRAILS SHALL NOT ROTATE WITHIN THEIR FITTINGS.

HANDRAIL EXTENSIONS
HANDRAIL GRIPPING SURFACES SHALL EXTEND BEYOND AND IN THE SAME DIRECTION OF STAIR FLIGHTS AND RAMP RUNS.

EXCEPTIONS: ***11B ONLY***
- EXTENSIONS SHALL NOT BE REQUIRED FOR CONTINUOUS HANDRAILS AT THE INSIDE TURN OF SWITCH BACK OR DOGLEG STAIRS AND RAMPS.
- IN ASSEMBLY AREAS EXTENSIONS SHALL NOT BE REQUIRED FOR RAMP HANDRAILS IN AISLES SERVING SEATING WHERE THE HANDRAILS ARE DISCONTINUOUS TO PROVIDE ACCESS TO SEATING AND TO PERMIT CROSSOVER WITHIN AISLES.
- IN ALTERATIONS WHERE THE EXTENSION OF THE HANDRAIL IN THE DIRECTION OF RAMP RUN WOULD CREATE A HAZARD THE EXTENSION OF THE HANDRAIL MAY BE TURNED 90 DEG. FROM THE RAMP RUN TOP AND BOTTOM EXTENSION AT RAMPS.

RAMP HANDRAILS SHALL EXTEND HORIZONTALLY ABOVE THE LANDING FOR 12 INCHES MINIMUM BEYOND THE TOP AND BOTTOM OF RAMP RUNS. EXTENSIONS SHALL RETURN TO A WALL, GUARD, OR THE LANDING SURFACE, OR SHALL BE CONTINUOUS TO THE HANDRAIL OF AN ADJACENT RAMP RUN.

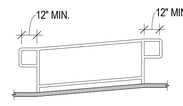

TOP AND BOTTOM HANDRAIL EXTENSION AT RAMPS

TOP EXTENSION AT STAIRS
AT THE TOP OF A STAIR FLIGHT, HANDRAILS SHALL EXTEND HORIZONTALLY ABOVE THE LANDING FOR 12 INCHES MINIMUM BEGINNING DIRECTLY ABOVE THE FIRST RISER NOSING. EXTENSIONS SHALL RETURN TO A WALL, GUARD, OR THE LANDING SURFACE, OR SHALL BE CONTINUOUS TO THE HANDRAIL OF AN ADJACENT STAIR FLIGHT.

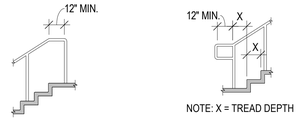

BOTTOM EXTENSION AT STAIRS
AT THE BOTTOM OF A STAIR FLIGHT, HANDRAILS SHALL EXTEND AT THE SLOPE OF THE STAIR FLIGHT FOR A HORIZONTAL DISTANCE AT LEAST EQUAL TO ONE TREAD DEPTH BEYOND THE LAST RISER NOSING. SUCH EXTENSION SHALL CONTINUE WITH A HORIZONTAL EXTENSION OR SHALL BE CONTINUOUS TO THE HANDRAIL OF AND ADJACENT STAIR FLIGHT OR SHALL RETURN TO THE WALL, GUARD, OR THE WALKING SURFACE. AT THE BOTTOM OF A STAIR FLIGHT, A HORIZONTAL EXTENSION SHALL BE 12 INCHES LONG MINIMUM AND A HEIGHT EQUAL TO THAT OF THE SLOPING PORTION OF THE HANDRAIL AS MEASURED ABOVE THE STAIR NOSINGS. EXTENSION SHALL RETURN TO A WALL, GUARD, OR THE LANDING SURFACE, OR SHALL BE CONTINUOUS TO THE HANDRAIL OF AN ADJACENT STAIR FLIGHT.

PROTRUDING OBJECTS (CBC 11B-307)

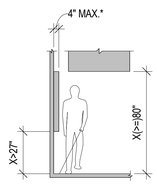

LIMITS OF PROTRUDING OBJECTS

* EXCEPTION: HANDRAILS SHALL BE PERMITTED TO PROTRUDE 4 1/2" MAX.

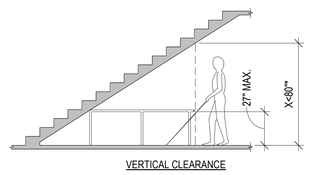

VERTICAL CLEARANCE

* DOOR CLOSERS AND STOPS SHALL BE PERMITTED TO BE 78" A.F.F.

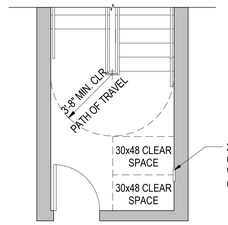

002_2-WAY COMMUNICATOR PLAN DIAGRAM (10)
1/4" = 1'-0"

CURB RAMPS CBC 11B-406 *(&1112A)*

CURB RAMPS LOCATION.
- CURB RAMPS AND THE FLARED SIDES OF CURB RAMPS SHALL BE LOCATED SO THAT THEY DO NOT PROJECT INTO VEHICULAR TRAFFIC LANES, PARKING SPACES, OR PARKING ACCESS AISLES. CURB RAMPS AT MARKED CROSSINGS SHALL BE WHOLLY CONTAINED WITHIN THE MARKINGS, EXCLUDING ANY FLARED SIDES.

LANDINGS.
- LANDINGS SHALL BE PROVIDED AT THE TOPS OF CURB RAMPS. THE LANDING CLEAR LENGTH SHALL BE 48 INCHES MINIMUM. THE LANDING CLEAR WIDTH SHALL BE AT LEAST AS WIDE AS THE CURB RAMP, EXCLUDING FLARED SIDES, LEADING TO THE LANDING. SLOPE OF THE LANDING IN ALL DIRECTIONS SHALL BE 1:48 MAXIMUM.

WIDTH
- THE CLEAR WIDTH OF CURB RAMP RUNS (EXCLUDING ANY FLARED SIDES) SHALL BE 48" MINIMUM

SLOPE
- RAMP RUNS SHALL HAVE A RUNNING SLOPE NO STEEPER THAN 1:12. WHERE PROVIDED, CURB RAMP FLARES. SHALL NOT BE STEEPER THAN 1:10.
- CROSS SLOPE OF CURB RAMP SHALL BE 1:48 MAXIMUM.

DIAGONAL CURB RAMPS
- DIAGONAL OR CORNER TYPE CURB RAMPS WITH RETURNED CURBS OR OTHER WELL-DEFINED EDGES SHALL HAVE THE EDGES PARALLEL TO THE DIRECTION OF PEDESTRIAN FLOW. DIAGONAL CURB RAMPS WITH FLARED SIDES SHALL HAVE A SEGMENT OF CURB 24 INCHES LONG MINIMUM LOCATED ON EACH SIDE OF THE CURB RAMP AND WITHIN THE MARKED CROSSING.

COUNTER SLOPE OF SURFACES ADJACENT TO CURB RAMPS

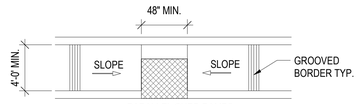

PARALLEL CURB RAMPS

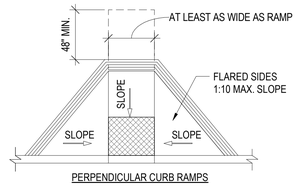

PERPENDICULAR CURB RAMPS

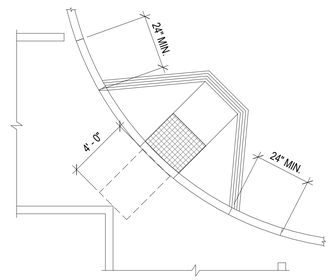

DIAGONAL OR CORNER TYPE CURB RAMPS

BASED ON CBC 11B ONLY
Designations *11B only* cite references to these code sections, but may apply to any project, whether publicly or privately funded.

PYATOK
1611 TELEGRAPH AVE.
SUITE 200
OAKLAND, CA 94612
T. 510.465.7010 | F. 510.465.8575
www.pyatok.com

THE UNITY COUNCIL
1900 FRUITVALE AVE
#2A
OAKLAND, CA 94601

2700 INTERNATIONAL
OAKLAND, CA 94601

STAMP:
PETER WALLER C-23567 LICENSED ARCHITECT 4/30/2023 STATE OF CALIFORNIA

ISSUE SCHEDULE

100 SD	5/11/22
50 DD	7/15/22
100 DD	9/16/22
50 CD	11/18/22
PERMIT SET	12/09/22

REVISION SCHEDULE

NO.	ISSUE	DATE

JOB NUMBER:	1937
DRAWN BY:	Author
CHECKED BY:	Checker
ISSUE DATE:	12/09/22
SCALE:	1/4" = 1'-0"

TITLE:
CBC 2019 - ACCESSIBILITY - COMMON AREAS

SHEET:
G0.31

PRELIMINARY - Not for Construction -

© 2019 PYATOK ARCHITECTURE & URBAN DESIGN

12/8/2022 6:21:40 PM

FLOOR AND GROUND SURFACES (CBC 11B-302)

GENERAL
FLOOR AND GROUND SURFACE SHALL BE STABLE, FIRM, AND SLIP RESISTANT.
CARPET
CARPET OR CARPET TILE SHALL BE SECURELY ATTACHED AND SHALL HAVE A FIRM CUSHION, PAD, OR BACKING, OR NO CUSHION OR PAD. CARPET OR CARPET TILE SHALL HAVE A LEVEL LOOP, TEXTURED LOOP, LEVEL CUT PILE, OR LEVEL CUT/UNCUT PILE TEXTURE. PILE HEIGHT SHALL BE 1/2 INCH MAXIMUM. EXPOSED EDGES OF CARPET SHALL BE FASTENED TO FLOOR SURFACES AND SHALL HAVE TRIM ON THE ENTIRE LENGTH OF THE EXPOSED EDGE. CARPET EDGE TRIM SHALL COMPLY WITH CBC 11B-303.

CARPET PILE HEIGHT

OPENINGS:
OPENINGS IN FLOOR OR GROUND SURFACES SHALL NOT ALLOW PASSAGE OF A SPHERE MORE THAN 1/2 INCH DIAMETER. ELONGATED OPENINGS SHALL BE PLACED SO THAT THE LONG DIMENSION IS PERPENDICULAR TO THE DOMINANT DIRECTION OF TRAVEL.

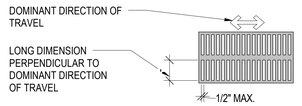

ELONGATED OPENINGS IN FLOOR OR GROUND SURFACES

CHANGES IN LEVEL (CBC 11B-303)

VERTICAL
CHANGES IN LEVEL OF 1/4 INCH HIGH MAXIMUM SHALL BE PERMITTED TO BE VERTICAL.

VERTICAL CHANGE IN LEVEL

BEVELED
CHANGES IN LEVEL BETWEEN 1/4 INCH HIGH MINIMUM AND 1/2 INCH HIGH MAXIMUM SHALL BE BEVELED WITH A SLOPE NOT STEEPER THAN 1:2.

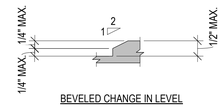

BEVELED CHANGE IN LEVEL

TURNING SPACE (11B-304)

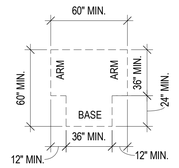

T SHAPED TURNING SPACE

CIRCULAR SPACE

CLEAR FLOOR /GROUND SPACE (CBC 11B-305)

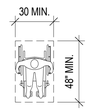

FORWARD

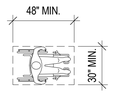

PARALLEL

TOE AND KNEE SPACE (CBC 11B-306)

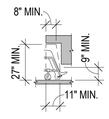

ELEVATION

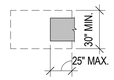

PLAN

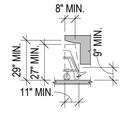

ELEVATION @ LAVATORY

KNEE CLEARANCE

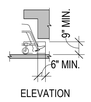

ELEVATION

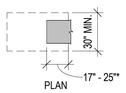

PLAN

*19" MIN. @ DINING AND WORK SURFACES

TOE CLEARANCE

REACH RANGES (CBC 11B-308)

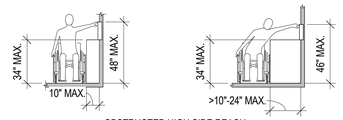

OBSTRUCTED HIGH SIDE REACH

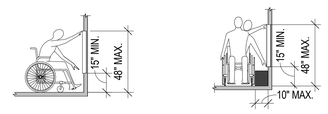

UNOBSTRUCTED HIGH FORWARD REACH

UNOBSTRUCTED HIGH SIDE REACH

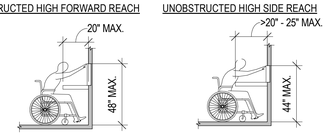

OBSTRUCTED HIGH FORWARD REACH

WALKING SURFACES (CBC 11B-403)

SLOPE
THE RUNNING SLOPE OF WALKING SURFACES SHALL NOT BE STEEPER THAN 1:20. THE CROSS SLOPE OF WALKING SURFACES SHALL NOT BE STEEPER THAN 1:48.
EXCEPTION:
- THE RUNNING SLOPE OF SIDEWALKS SHALL NOT EXCEED THE GENERAL GRADE ESTABLISHED FOR THE ADJACENT STREET OR HIGHWAY.

CHANGES IN LEVEL
CHANGES IN LEVEL SHALL COMPLY WITH CBC 11B-303.
CLEAR WIDTH
THE CLEAR WIDTH OF WALKING SURFACES SHALL BE 36 INCHES MINIMUM.
EXCEPTIONS:
- THE CLEAR WIDTH SHALL BE PERMITTED TO BE REDUCED TO 32 INCHES MINIMUM FOR A LENGTH OF 24 INCHES MAXIMUM PROVIDED THAT REDUCED WIDTH SEGMENTS ARE SEPARATED BY SEGMENTS THAT ARE 48 INCHES LONG MINIMUM AND 36 INCHES WIDE MINIMUM.
- THE CLEAR WIDTH FOR WALKING SURFACES IN CORRIDORS SERVING AN OCCUPANT LOAD OF 10 OR MORE SHALL BE 44 INCHES MINIMUM.
- THE CLEAR WIDTH FOR SIDEWALKS AND WALKS SHALL BE 48" MINIMUM. WHEN BECAUSE OF RIGHT OF WAY RESTRICTIONS, NATURAL BARRIERS, OR OTHER EXISTING CONDITIONS, THE ENFORCING AGENCY DETERMINES THAT COMPLIANCE WITH THE 48 INCH CLEAR SIDEWALK WIDTH WOULD CREATE AN UNREASONABLE HARDSHIP, THE CLEAR WIDTH MAY BE REDUCED TO 36 INCHES.
- THE CLEAR WIDTH OF AISLES SHALL BE 36 INCHES MINIMUM IF SERVING ELEMENTS ON ONLY ONE SIDE, AND 44 INCHES MINIMUM IF SERVING ELEMENTS ON BOTH SIDES.

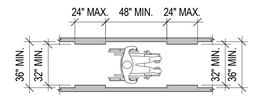

CLEAR WIDTH OF AN ACCESSIBLE ROUTE

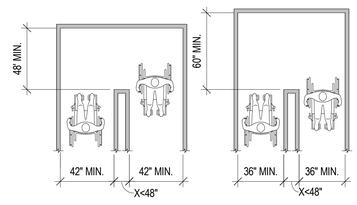

180° TURN

180° TURN (EXCEPTION)

CLEAR WIDTH AT TURN

11B ONLY

OPERABLE PARTS (CBC 11B-309)

CLEAR FLOOR SPACE
A CLEAR FLOOR OR GROUND SPACE COMPLYING WITH CBC 11B-305 SHALL BE PROVIDED.

HEIGHT
OPERABLE PARTS SHALL BE PLACED WITHIN ONE OR MORE OF THE REACH RANGES (CBC 11B-308.)

OPERATION
OPERABLE PARTS SHALL BE OPERABLE WITH ONE HAND AND SHALL NOT REQUIRE TIGHT GRASPING, PINCHING, OR TWISTING OF THE WRIST. THE FORCE REQUIRED TO ACTIVATE OPERABLE PARTS SHALL BE 5 POUNDS MAXIMUM.

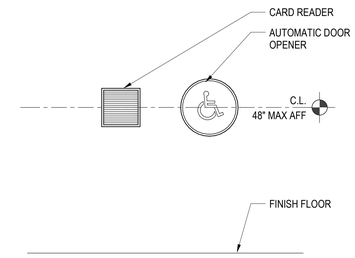

CARD READER & AUTOMATIC DOOR OPENER 9
1 1/2" = 1'-0"

BASED ON CBC 11B ONLY

Designations *11B only* cite references to these code sections, but may apply to any project, whether publicly or privately funded.

PYATOK
1611 TELEGRAPH AVE.
SUITE 200
OAKLAND, CA 94612
T. 510.465.7010 | F. 510.465.8575
www.pyatok.com

THE UNITY COUNCIL
1900 FRUITVALE AVE
#2A
OAKLAND, CA 94601

2700 INTERNATIONAL
OAKLAND, CA 94601

STAMP:
PETER WALLER
C-23597
4/20/2023

ISSUE SCHEDULE

100 SD	5/11/22
50 DD	7/15/22
100 DD	9/16/22
50 CD	11/18/22
PERMIT SET	12/09/22

REVISION SCHEDULE

NO.	ISSUE	DATE

JOB NUMBER:	1937
DRAWN BY:	Author
CHECKED BY:	Checker
ISSUE DATE:	12/09/22
SCALE:	As indicated

TITLE:
CBC 2019 - ACCESSIBILITY - COMMON AREAS

SHEET:
G0.32

PRELIMINARY - Not for Construction -

© 2019 PYATOK ARCHITECTURE & URBAN DESIGN

12/8/2022 6:21:44 PM

TOILET AND BATHING ROOMS (CBC 11B-603)

TURNING SPACE
TURNING SPACE COMPLYING WITH 11B-304 SHALL BE PROVIDED WITHIN THE ROOM.

OVERLAP
REQUIRED CLEAR FLOOR SPACES, CLEARANCE AT FIXTURES, AND TURNING SPACE SHALL BE PERMITTED TO OVERLAP.

DOOR SWING
DOORS SHALL NOT SWING INTO THE CLEAR FLOOR SPACE OR CLEARANCE REQUIRED FOR ANY FIXTURE OTHER THAN THE DOOR TO THE ACCESSIBLE WATER CLOSET COMPARTMENT, A DOOR IN ANY POSITION MAY ENCROACH INTO THE TURNING SPACE BY 12 INCHES MAXIMUM.

EXCEPTION:
- WHERE THE TOILET ROOM OR BATHING ROOM IS FOR INDIVIDUAL USE AND A CLEAR SPACE COMPLYING WITH 11B-305.3 IS PROVIDED WITHIN THE ROOM BEYOND THE ARC OF THE DOOR SWING, DOORS SHALL BE PERMITTED TO SWING INTO THE CLEAR FLOOR SPACE OR CLEARANCE REQUIRED FOR ANY FIXTURE.
- IN RESIDENTIAL DWELLING UNITS COMPLYING WITH SECTION 11B-233.3.1.1, DOORS SHALL BE PERMITTED TO SWING OVER THE TURNING SPACE WITHOUT LIMITATION.

MIRRORS
MIRRORS LOCATED ABOVE LAVATORIES OR COUNTERTOPS SHALL BE INSTALLED WITH THE BOTTOM EDGE OF THE REFLECTING SURFACE 40 INCHES MAXIMUM ABOVE THE FINISH FLOOR OR GROUND MIRRORS NOT LOCATED ABOVE LAVATORIES OR COUNTERTOPS SHALL BE INSTALLED WITH THE BOTTOM EDGE OF THE REFLECTING SURFACE 35 INCHES MAXIMUM ABOVE THE FINISH FLOOR OR GROUND.

COAT HOOKS, SHELVES AND MEDICINE CABINETS
COAT HOOKS SHALL BE LOCATED WITHIN ONE OF THE REACH RANGES SPECIFIED IN 11B-308 SHELVES SHALL BE LOCATED 40 INCHES MINIMUM AND 48 INCHES MAXIMUM ABOVE THE FINISH FLOOR. MEDICINE CABINETS SHALL BE LOCATED WITH A USABLE SHELF NO HIGHER THAN 44 INCHES MAXIMUM ABOVE THE FINISH FLOOR.

ACCESSORIES
WHERE TOWEL OR SANITARY NAPKINS DISPENSERS, WASTE RECEPTACLES OR OTHER ACCESSORIES ARE PROVIDED IN TOILET FACILITIES, AT LEAST ONE OF EACH TYPE SHALL BE LOCATED ON THE ACCESSIBLE ROUTE. ALL OPERABLE PARTS, INCLUDING COIN SLOTS SHALL BE 40 INCHES MAXIMUM ABOVE THE FINISH FLOOR. ACCESSORIES SHALL NOT PROTRUDE MORE THAN 4" ONTO PATH OFTRAVEL OR CLEAR SPACES.

DRINKING FOUNTAIN (CBC 11B-602)

CLEAR FLOOR SPACE
UNITS SHALL HAVE A CLEAR FLOOR OR GROUND SPACE COMPLYING WITH 11B-305 POSITIONED FOR A FORWARD APPROACH AND CENTERED ON THE UNIT. KNEE AND TOE CLEARANCE COMPLYING WITH 11B-306 SHALL BE PROVIDED. SPOUT HEIGHT. SPOUT OUTLETS SHALL BE 36 INCHES MAXIMUM ABOVE THE FINISH FLOOR OR GROUND SPOUT LOCATION. THE SPOUT SHALL BE LOCATED 15 INCHES MINIMUM FROM THE VERTICAL SUPPORT AND 5 INCHES MAXIMUM FROM THE FRONT EDGE OF THE UNIT, INCLUDING THE BUMPERS.

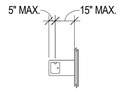

DRINKING FOUNTAIN SPOUT LOCATION

DRINKING FOUNTAINS FOR STANDING PERSONS. SPOUT OUTLETS OF DRINKING FOUNTAINS FOR STANDING PERSONS SHALL BE 38 INCHES MINIMUM AND 43 INCHES MAXIMUM ABOVE THE FINISH FLOOR.

GRAB BARS (CBC 11B-609)

GRAB BARS SPACING
THE SPACE BETWEEN THE WALL AND THE GRAB BAR SHALL BE 1 1/2 INCHES. THE SPACE BETWEEN THE GRAB BAR AND PROJECTING OBJECTS BELOW AND AT THE ENDS SHALL BE 1 1/2 INCHES MINIMUM. THE SPACE BETWEEN THE GRAB BAR AND PROJECTING OBJECTS ABOVE SHALL BE 12 INCHES MINIMUM.

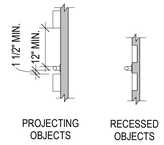

SPACING OF GRAB BARS

POSITION OF GRAB BARS
GRAB BARS SHALL BE INSTALLED IN A HORIZONTAL POSITION, 33 INCHES MINIMUM AND 36 INCHES ABOVE THE FINISH FLOOR MEASURED TO THE TOP OF THE GRIPPING SURFACE.

SURFACE HAZARDS
GRAB BARS AND ANY WALL OR OTHER SURFACES ADJACENT TO GRAB BARS SHALL BE FREE OF SHARP OR ABRASIVE ELEMENTS AND SHALL HAVE ROUNDED EDGES.

FITTINGS
GRAB BARS SHALL NOT ROTATE WITHIN THEIR FITTINGS.

INSTALLATION
GRAB BARS SHALL BE INSTALLED IN ANY MANNER THAT PROVIDES A GRIPPING SURFACE AT THE SPECIFIED LOCATIONS AND THAT DOES NOT OBSTRUCT THE REQUIRED CLEAR FLOOR SPACE.

STRUCTURAL STRENGTH
ALLOWABLE STRESSES SHALL NOT BE EXCEEDED FOR MATERIALS USED WHEN A VERTICAL OR HORIZONTAL FORCE OF 250 POUNDS (1112 N) IS APPLIED AT ANY POINT ON THE GRAB BAR, FASTENER, MOUNTING DEVICE, OR SUPPORTING STRUCTURE.

URINALS (CBC 11B-605)

HEIGHT AND DEPTH
URINALS SHALL BE THE STALL-TYPE OR THE WALL-HUNG TYPE WITH THE RIM 17 INCHES MAXIMUM ABOVE THE FINISH FLOOR OR GROUND. URINALS SHALL BE 13 1/2 INCHES DEEP MINIMUM MEASURED FROM THE OUTER FACE OF THE URINAL RIM TO THE BACK OF THE FIXTURE.

CLEAR FLOOR SPACE
A CLEAR FLOOR OR GROUND SPACE COMPLYING WITH 11B-305 POSITIONED FOR FORWARD APPROACH SHALL BE PROVIDED.

FLUSH CONTROLS
SHALL BE HAND OPERATED OR AUTOMATIC. HAND OPERATED CONTROLS SHALL COMPLY WITH CBC 11B-309 EXCEPT THAT THE FLUSH CONTROL SHALL BE MOUNTED AT A MAXIMUM HEIGHT OF 44 INCHES ABOVE THE FINISH FLOOR.

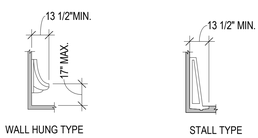

HEIGHT AND DEPTH OF URINALS

WATER CLOSETS AND TOILET COMPARTMENTS (CBC 11B-604)

SIZE
CLEARANCE AROUND A WATER CLOSET SHALL BE 60 INCHES MINIMUM MEASURED PERPENDICULAR FROM THE SIDE WALL AND 56 INCHES MINIMUM MEASURED PERPENDICULAR FROM THE REAR WALL. A 60 INCH WIDE AND 48 INCH DEEP MANEUVERING SPACE SHALL BE PROVIDED IN FRONT OF THE WATER CLOSET.

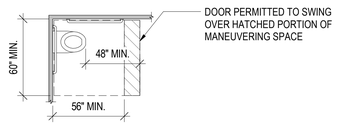

SIZE OF CLEARANCE AT WATER CLOSETS

OVERLAP
THE REQUIRED CLEARANCE AROUND THE WATER CLOSET SHALL PERMITTED TO OVERLAP THE WATER CLOSET, ASSOCIATED GRAB BARS, DISPENSERS, SANITARY NAPKIN DISPOSAL UNITS, COAT HOOKS, SHELVES, ACCESSIBLE ROUTES, CLEAR FLOOR SPACE AND CLEARANCES REQUIRED AT OTHER FIXTURES AND THE TURNING SPACE. NO OTHER FIXTURES OR OBSTRUCTIONS SHALL BE LOCATED WITHIN THE REQUIRED WATER CLOSET CLEARANCE.

EXCEPTION:
- IN RESIDENTIAL DWELLING UNITS , A LAVATORY COMPLYING WITH 11B-606 SHALL BE PERMITTED ON THE REAR WALL 18 INCHES MINIMUM FROM THE WATER CLOSET CENTERLINE WHERE THE CLEARANCE AT THE WATER CLOSET IS 66 INCHES MINIMUM MEASURED PERPENDICULAR FROM THE REAR WALL.

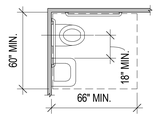

OVERLAP OF WATER CLOSET CLEARANCE IN RESIDENTIAL DWELLING UNITS ONLY

SEATS
THE SEAT HEIGHT OF A WATER CLOSET ABOVE THE FINISH FLOOR SHALL BE 17 INCHES MINIMUM AND 19 INCHES MAXIMUM MEASURED TO THE TOP OF THE SEAT. SEATS SHALL NOT BE SPRUNG TO RETURN TO A LIFTED POSITION. SEATS SHALL 2" HIGH MAXIMUM.

EXCEPTION:
- IN RESIDENTIAL DWELLING UNITS THE HEIGHT OF THE WATER CLOSET SHALL BE PERMITTED TO BE 15 INCHES MINIMUM AND 19 INCHES MAXIMUM ABOVE THE FINISH FLOOR MEASURED TO THE TOP OF THE SEAT.

GRAB BARS
GRAB BARS SHALL BE PROVIDED ON THE SIDE WALL CLOSEST TO THE WATER CLOSET AND ON THE REAR WALL.

EXCEPTIONS:
- IN RESIDENTIAL DWELLING UNITS , GRAB BARS SHALL NOT BE REQUIRED TO BE INSTALLED IN TOILET OR BATHROOMS PROVIDED THAT REINFORCEMENT HAS BEEN INSTALLED IN WALLS AND LOCATED SO AS TO PERMIT THE INSTALLATION OF GRAB BARS.
- THE REAR GRAB BAR SHALL BE PERMITTED TO BE 24 INCHES LONG MINIMUM CENTERED ON THE WATER CLOSET WHERE WALL SPACE DOES NOT PERMIT A LENGTH OF 36 INCHES MINIMUM DUE TO LOCATION OF A RECESSED FIXTURE ADJACENT TO THE WATER CLOSET.

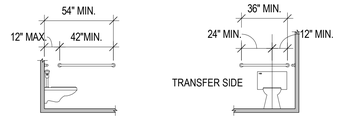

FLUSH CONTROLS
FLUSH CONTROLS SHALL BE HAND OPERATED OR AUTOMATIC. HAND OPERATED FLUSH CONTROLS SHALL COMPLY WITH 11B-309. FLUSH CONTROLS SHALL BE LOCATED ON THE OPEN SIDE OF THE WATER CLOSET EXCEPT IN AMBULATORY ACCESSIBLE COMPARTMENTS COMPLYING WITH CBC11B-604.8.2.

DISPENSERS AND DISPOSAL UNITS
TOILET PAPER DISPENSERS: SHALL COMPLY WITH 11B 309.4 AND SHALL BE 7 INCHES MINIMUM AND 9 INCHES MAXIMUM IN FRONT OF THE WATER CLOSET MEASURED TO THE CENTERLINE OF THE DISPENSER. THE OUTLET OF THE DISPENSER SHALL BE BELOW THE GRAB BAR, 19 INCHES MINIMUM ABOVE THE FINISH FLOOR, AND SHALL NOT BE LOCATED BEHIND GRAB BARS. DISPENSERS SHALL NOT BE OF A TYPE THAT CONTROLS DELIVERY OR THAT DOES NOT ALLOW CONTINUOUS PAPER FLOW.

SANITARY NAPKIN DISPOSAL UNITS: IF PROVIDED, SHALL COMPLY WITH SECTION 11B-309.4 AND SHALL BE WALL MOUNTED AND LOCATED ON THE SIDEWALL BETWEEN THE REAR WALL OF THE TOILET AND THE TOILET PAPER DISPENSER, ADJACENT TO THE TOILET PAPER DISPENSER. THE DISPOSAL UNIT SHALL BE LOCATED BELOW THE GRAB BAR WITH THE OPENING OF THE DISPOSAL UNIT 19 INCHES MINIMUM ABOVE THE FINISH FLOOR.

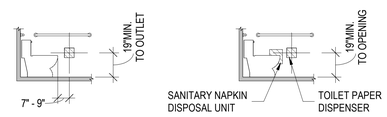

WASHING MACHINES AND CLOTHES DRYERS (CBC 11B-611)

CLEAR FLOOR SPACE
A CLEAR FLOOR OR GROUND SPACE COMPLYING WITH CBC 11B-305 POSITIONED FOR PARALLEL APPROACH SHALL BE PROVIDED. THE CLEAR FLOOR OR GROUND SPACE SHALL BE CENTERED ON THE APPLIANCE.

OPERABLE PARTS
OPERABLE PARTS, INCLUDING DOORS, LINT SCREENS, AND DETERGENT AND BLEACH COMPARTMENTS SHALL COMPLY WITH CBC 11B-309.

HEIGHT
TOP LOADING MACHINES SHALL HAVE THE DOOR TO THE LAUNDRY COMPARTMENT LOCATED 36 INCHES MAXIMUM ABOVE THE FINISH FLOOR. FRONT LOADING MACHINES SHALL HAVE THE BOTTOM OF THE OPENING TO THE LAUNDRY COMPARTMENT LOCATED 15 INCHES MINIMUM AND 36 INCHES MAXIMUM ABOVE THE FINISH FLOOR.

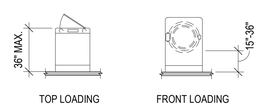

HEIGHT OF LAUNDRY COMPARTMENT OPENING

WHEELCHAIR ACCESSIBLE COMPARTMENTS

SIZE
WHEELCHAIR ACCESSIBLE COMPARTMENTS SHALL BE 60 INCHES WIDE MINIMUM MEASURED PERPENDICULAR TO THE SIDE WALL, AND 56 INCHES DEEP MINIMUM FOR WALL HUNG WATER CLOSETS AND 59 INCHES DEEP MINIMUM FOR FLOOR MOUNTED WATER CLOSETS MEASURED PERPENDICULAR TO THE REAR WALL.

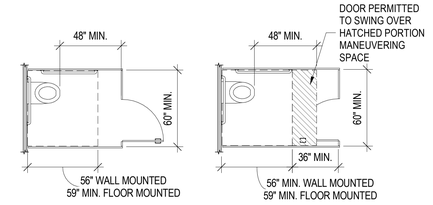

SIZE OF WHEELCHAIR ACCESSIBLE TOILET COMPARTMENT WITH END OPENING DOOR

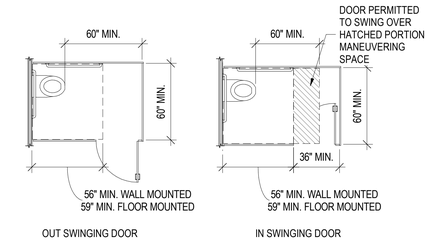

SIZE OF WHEELCHAIR ACCESSIBLE TOILET COMPARTMENT WITH SIDE OPENING DOOR

DOORS
TOILET COMPARTMENT DOORS, INCLUDING DOOR HARDWARE, SHALL COMPLY WITH CBC 11B-404 EXCEPT THAT IF THE APPROACH IS FROM THE PUSH SIDE OF THE COMPARTMENT DOOR CLEARANCE BETWEEN THE DOOR SIDE OF THE COMPARTMENT AND ANY OBSTRUCTION SHALL BE 48 INCHES MINIMUM MEASURED PERPENDICULAR TO THE COMPARTMENT DOOR IN ITS CLOSED POSITION. DOORS SHALL BE LOCATED IN THE FRONT PARTITION OR IN THE SIDE WALL OR PARTITION FARTHEST FROM THE WATER CLOSET. WHERE LOCATED IN THE FRONT PARTITION, THE DOOR OPENING SHALL BE 4 INCHES MAXIMUM FROM THE SIDE WALL OR PARTITION FARTHEST FROM THE WATER CLOSET. WHERE LOCATED IN THE SIDE WALL OR PARTITION, THE DOOR OPENING SHALL BE 4 INCHES MAXIMUM FROM THE FRONT PARTITION. THE DOOR SHALL BE SELF-CLOSING. A DOOR PULL COMPLYING WITH CBC 11B-404.2.7 SHALL BE PLACED ON BOTH SIDES OF THE DOOR NEAR THE LATCH. DOORS SHALL NOT SWING INTO THE CLEAR FLOOR SPACE OR CLEARANCE REQUIRED FOR ANY FIXTURE. DOORS MAY SWING INTO THAT PORTION OF MANEUVERING WHICH DOES NOT OVERLAP THE CLEARANCE REQUIRED AT A WATER CLOSET.

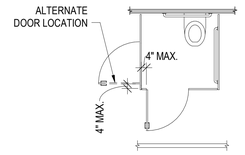

WHEELCHAIR ACCESSIBLE TOILET COMPARTMENT DOORS

TOE CLEARANCE
AT LEAST ONE SIDE PARTITION SHALL PROVIDE A TOE CLEARANCE OF 9 INCHES MINIMUM ABOVE THE FINISH FLOOR AND 6 INCHES DEEP MINIMUM BEYOND THE COMPARTMENT-SIDE FACE OF THE PARTITION, EXCLUSIVE OF PARTITION SUPPORT MEMBERS. PARTITION COMPONENTS AT TOE CLEARANCES SHALL BE SMOOTH WITHOUT SHARP EDGES OR ABRASIVE SURFACES. COMPARTMENTS FOR CHILDREN'S USE SHALL PROVIDE A TOE CLEARANCE OF 12 INCHES MINIMUM ABOVE THE FINISH FLOOR.

EXCEPTION:
- TOE CLEARANCE AT THE SIDE PARTITION IS NOT REQUIRED IN A COMPARTMENT GREATER THAN 66 INCHES WIDE.

APPROACH
COMPARTMENTS SHALL BE ARRANGED FOR LEFT-HAND OR RIGHT-HAND APPROACH TO THE WATER CLOSET.

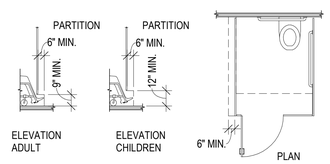

WHEELCHAIR ACCESSIBLE TOILET COMPARTMENT TOE CLEARANCE

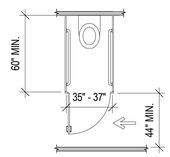

AMBULATORY ACCESSIBLE TOILET COMPARTMENT

BASED ON CBC 11B ONLY

Designations *11B only* cite references to these code sections, but may apply to any project, whether publicly or privately funded.

PYATOK
1611 TELEGRAPH AVE.
SUITE 200
OAKLAND, CA 94612
T. 510.465.7010 | F. 510.465.8575
www.pyatok.com

THE UNITY COUNCIL
1900 FRUITVALE AVE
#2A
OAKLAND, CA 94601

2700 INTERNATIONAL
OAKLAND, CA 94601

STAMP:
LICENSED ARCHITECT
PETER WALLER
C-23569
4/30/2023
STATE OF CALIFORNIA

ISSUE SCHEDULE

100 SD	5/11/22
50 DD	7/15/22
100 DD	9/16/22
50 CD	11/18/22
PERMIT SET	12/09/22

REVISION SCHEDULE

NO.	ISSUE	DATE

JOB NUMBER:	1937
DRAWN BY:	Author
CHECKED BY:	Checker
ISSUE DATE:	12/09/22
SCALE:	1/4" = 1'-0"

TITLE:
CBC 2019 - ACCESSIBILITY - RESTROOMS

SHEET:
G0.33

PRELIMINARY - Not for Construction -

© 2019 PYATOK ARCHITECTURE & URBAN DESIGN

12/8/2022 6:21:47 PM

STAIRWAY IDENTIFICATION SIGNS (CBC 1023.9)

A SIGN SHALL BE PROVIDED AT EACH FLOOR LANDING IN AN INTERIOR EXIT STAIRWAY AND RAMP CONNECTING MORE THAN THREE STORIES DESIGNATING THE FLOOR LEVEL, THE TERMINUS OF THE TOP AND BOTTOM OF THE INTERIOR EXIT STAIRWAY AND RAMP AND THE IDENTIFICATION OF THE STAIR OR RAMP. THE SIGNAGE SHALL ALSO STATE THE STORY OF AND THE DIRECTION TO THE EXIT DISCHARGE AND THE AVAILABILITY OF ROOF ACCESS FROM THE INTERIOR EXIT STAIRWAY AND RAMP FOR THE FIRE DEPARTMENT. THE SIGN SHALL BE LOCATED 5 FEET ABOVE THE FLOOR LANDING IN A POSITION THAT IS READILY VISIBLE WHEN THE DOORS ARE THE OPEN AND CLOSED POSITIONS.

IN ADDITION TO THE STAIRWAY IDENTIFICATION SIGN, RAISED CHARACTERS AND BRAILLE FLOOR IDENTIFICATION SIGNS SHALL BE LOCATED AT THE LANDING OF EACH FLOOR LEVEL, PLACED ADJACENT TO THE DOOR ON THE LATCH SIDE, IN ALL ENCLOSED STAIRWAYS IN BUILDING TWO OR MORE STORIES IN HEIGHT TO IDENTIFY THE FLOOR LEVEL.
AT THE EXIT DISCHARGE LEVEL, THE SIGN SHALL INCLUDE A RAISED FIVE POINTED STAR LOCATED TO THE LEFT OF THE IDENTIFYING FLOOR LEVEL. THE OUTSIDE DIAMETER OF THE STAR SHALL BE THE SAME AS THE HEIGHT OF THE RAISED CHARACTERS.

SIGNAGE REQUIREMENTS.

- STAIRWAY IDENTIFICTIONSIGNS SHALL COMPLY WITH THE FOLLOWING REQUIREMENTS:
- THE SIGNS SHALL BE A MINIMUM SIZE OF 18 INCHES BY 12 INCHES.
- SIGN SHALL BE LOCATED ADJACENT TO LATCH SIDE, CENTERED AT 9" FROM DOOR EDGE (OR 7" FROM FRAME.)
- THE LETTERS DESIGNATING THE IDENTIFICATION OF THE STAIR ENCLOSURE SUCH AS *STAIR NO. 1* OR *WEST STAIR* SHALL BE PLACED AT THE TOP OF THE SIGN AND SHALL BE A MINIMUM OF 1 1/2 INCHES IN HEIGHT BLOCK LETTERING WITH 1/4 INCH STROKES.
- THE NUMBER DESIGNATING THE FLOOR LEVEL SHALL BE A MINIMUM OF 5 INCHES IN HEIGHT WITH 3/4 INCH STROKES AND LOCATED IN THE CENTER OF THE SIGN. THE MEZZANINE LEVELS SHALL HAVE THE LETTER "M" PRECEDING THE FLOOR LEVEL. BASEMENT LEVELS SHALL HAVE THE LETTER "B" PRECEDING THE FLOOR NUMBER.
- ALL OTHER LETTERING SHALL BE A MINIMUM OF 1 INCH IN HEIGHT.
- THE STAIRWAY UPPER TERMINUS SUCH AS *ROOF ACCESS* OR *NO ROOF ACCESS* SHALL BE PLACED UNDER THE STAIRWAY IDENTIFICATION IN 1 INCH HIGH BLOCK LETTERING WITH 1/4 INCH STROKES.
- THE LOWER AND UPPER TERMINUS OF THE STAIRWAY SHALL BE PLACED AT THE BOTTOM OF THE SIGN IN 1 INCH HIGH BLOCK LETTERING WITH 1/4 INCH STROKES.
- CHARACTERS AND THEIR BACKGROUND SHALL HAVE A NON-GLARE FINISH. CHARACTERS SHALL CONTRAST WITH THEIR BACKGROUND WITH EITHER LIGHT CHARACTERS ON A DARK BACKGROUND OR DARK CHARACTERS ON A LIGHT BACKGROUND.

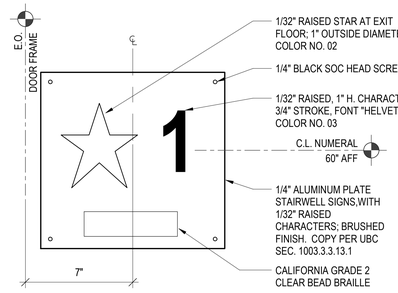

FLOOR LEVEL IDENTIFICATION SIGN (INTERIOR OF STAIR) 5
3" = 1'-0"

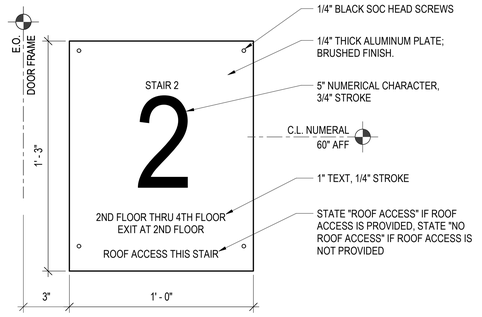

STAIRWAY IDENTIFICATION SIGN (EXERIOR OF STAIR) 6
3" = 1'-0"

NOTES:
1) TOILET FACILITIES SYMBOLS TO CONTRAST WITH THE DOOR, EITHER LIGHT ON DARK BACKGROUND OR DARK ON A LIGHT BACKGROUND (CBC 11B-703.7.2.6).

2) TRIANGLE SYMBOL TO CONTRAST WITH THE CIRCLE SYMBOL, EITHER LIGHT ON A DARK BACKGROUND OR DARK ON A LIGHT BACKGROUND.

3) THE CIRCLE SYMBOL SHALL CONTRAST WITH THE DOOR, EITHER LIGHT ON A DARK BACKGROUND OR DARK ON A LIGHT BACKGROUND (CBC 11B-703.7.2.6.3).

UNISEX RESTROOM

UNISEX ACCESSIBLE RESTROOM DOOR SIGN 13
3" = 1'-0"

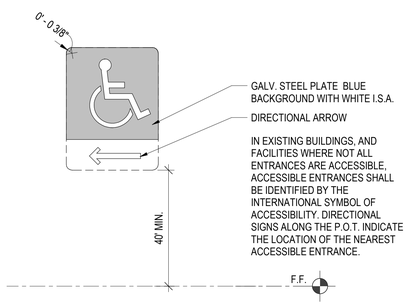

DIRECTIONAL SIGNAGE 7
3" = 1'-0"

COMMUNICATION ELEMENTS AND FEATURES

FIRE ALARM SYSTEMS (CBC 11B-702)

GENERAL
FIRE ALARM SYSTEMS SHALL HAVE PERMANENTLY INSTALLED AUDIBLE AND VISIBLE ALARMS COMPLYING WITH NFPA 72 AND CHAPTER 9 SECTIONS 907.5.2.1 AND 907.5.2.3 OF THE 2019 CALIFORNIA BUILDING CODE.

SIGNS (CBC 11B 703)

GENERAL
WHERE BOTH VISUAL AND TACTILE CHARACTERS ARE REQUIRED, EITHER ONE SIGN WITH BOTH VISUAL AND TACTILE CHARACTERS, OR TWO SEPARATE SIGNS, ONE WITH VISUAL, AND ONE WITH TACTILE CHARACTERS, SHALL BE PROVIDED.

RAISED CHARACTERS
RAISED CHARACTERS SHALL BE DUPLICATED IN BRAILLE

DEPTH
RAISED CHARACTERS SHALL BE 1/32 INCH MINIMUM ABOVE THEIR BACKGROUND.

CASE
CHARACTERS SHALL BE UPPERCASE.

STYLE
CHARACTERS SHALL BE SANS SERIF. CHARACTERS SHALL NOT BE ITALIC, OBLIQUE, SCRIPT, HIGHLY DECORATIVE, OR OF OTHER UNUSUAL FORMS.

CHARACTER HEIGHT
MEASURED VERTICALLY FROM THE BASELINE OF THE CHARACTER SHALL BE 5/8 INCH (16 MM) MINIMUM AND 2 INCHES (51 MM) MAXIMUM BASED ON THE HEIGHT OF THE UPPERCASE LETTER "I".

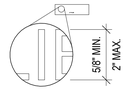

LINE SPACING
SPACING BETWEEN THE BASELINES OF SEPARATE LINES OF RAISED CHARACTERS WITHIN A MESSAGE SHALL BE 135 PERCENT MINIMUM AND 170 PERCENT MAXIMUM OF THE RAISED CHARACTER HEIGHT.

BRAILLE
BRAILLE SHALL BE CONTRACTED (GRADE 2.)

INSTALLATION HEIGHT AND LOCATION

- TACTILE SIGNAGE SHALL BE LOCATED 48" MINIMUM ABOVE THE FINISH FLOOR OR GROUND SURFACE, MEASURED FROM THE BASELINE OF THE LOWEST LINE OF BRAILLE AND 60" MAXIMUM ABOVE THE FINISH FLOOR OR GROUND SURFACE, MEASURED FROM THE BASELINE OF THE HIGHEST LINE OF RAISED CHARACTERS (CBC 11B-703.4.1).
- WHERE A TACTILE SIGN IS PROVIDED AT A DOOR, THE SIGN SHALL BE LOCATED ALONGSIDE THE DOOR AT THE LATCH SIDE. WHERE A TACTILE SIGN IS PROVIDED AT DOUBLE DOORS WITH ONE ACTIVE LEAF, THE SIGN SHALL BE LOCATED ON THE INACTIVE LEAF. WHERE A TACTILE SIGN IS PROVIDED AT DOUBLE DOORS WITH TWO ACTIVE LEAFS, THE SIGN SHALL BE LOCATED ON THE RIGHT SIDE OF THE RIGHT HAND DOOR. WHERE THERE IS NO WALL SPACE ON THE RIGHT SIDE OF A SINGLE DOOR OR AT THE RIGHT SIDE OF DOUBLE DOORS, SIGNS SHALL BE LOCATED ON THE NEAREST ADJACENT WALL.
- SIGNS CONTAINING TACTILE CHARACTERS SHALL BE LOCATED SO THAT A CLEAR FLOOR SPACE OF 18 INCHES MINIMUM BY 18" MINIMUM CENTERED ON THE TACTILE CHARACTERS IS PROVIDED BEYOND THE ARC OF ANY DOOR SWING BETWEEN THE CLOSED POSITION AND 45 DEGREE OPEN POSITION.

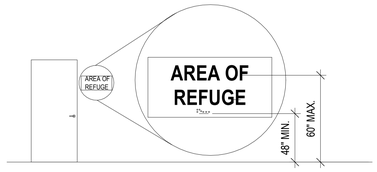

HEIGHT OF TACTILE CHARACTERS ABOVE FINISH FLOOR OR GROUND

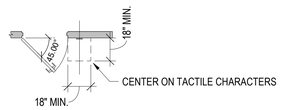

LOCATION OF TACTILE SIGNS AT DOORS

PICTOGRAMS

- PICTOGRAM FIELDS SHALL HAVE A FIELD HEIGHT OF 6 INCHES MINIMUM. CHARACTERS AND BRAILLE SHALL NOT BE LOCATED IN THE PICTOGRAM FIELD.
- FINISH AND CONTRAST: PICTOGRAMS AND THEIR FIELD SHALL HAVE A NON-GLARE FINISH. PICTOGRAMS SHALL CONTRAST WITH THEIR FIELD WITH EITHER A LIGHT PICTOGRAM ON A DARK FIELD OR A DARK PICTOGRAM ON A LIGHT FIELD.
- TEXT DESCRIPTORS: PICTOGRAMS SHALL HAVE TEXT DESCRIPTORS LOCATED DIRECTLY BELOW THE PICTOGRAM FIELD.

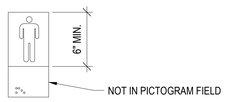

PICTOGRAM FIELD DARK-ON-LIGHT

SYMBOLS OF ACCESSIBILITY

- FINISH AND CONTRAST: SYMBOLS OF ACCESSIBILITY AND THEIR BACKGROUND SHALL HAVE A NON-GLARE FINISH. SYMBOLS OF ACCESSIBILITY SHALL CONTRAST WITH THEIR BACKGROUND WITH EITHER A LIGHT SYMBOL ON A DARK BACKGROUND OR A DARK SYMBOL ON A LIGHT BACKGROUND.

VISUAL CHARACTERS

- FINISH AND CONTRAST: CHARACTERS AND THEIR BACKGROUND SHALL HAVE A NON-GLARE FINISH. CHARACTERS SHALL CONTRAST WITH THEIR BACKGROUND WITH EITHER LIGHT CHARACTERS ON A DARK BACKGROUND OR DARK CHARACTERS ON A LIGHT BACKGROUND.
- CASE. CHARACTERS SHALL BE UPPERCASE OR LOWERCASE OR A COMBINATION OF BOTH.
- STYLE. CHARACTERS SHALL BE CONVENTIONAL IN FORM. CHARACTERS SHALL NOT BE ITALIC, OBLIQUE, SCRIPT, HIGHLY DECORATIVE, OR OF OTHER UNUSUAL FORMS.
- HEIGHT FROM FINISH FLOOR OR GROUND. VISUAL CHARACTERS SHALL BE 40 INCHES (1015 MM) MINIMUM ABOVE THE FINISH FLOOR OR GROUND.
- STROKE THICKNESS. STROKE THICKNESS OF THE UPPERCASE LETTER "I" SHALL BE 10 PERCENT MINIMUM AND 20 PERCENT MAXIMUM OF THE HEIGHT OF THE CHARACTER.
- CHARACTER SPACING. CHARACTER SPACING SHALL BE MEASURED BETWEEN THE TWO CLOSEST POINTS OF ADJACENT CHARACTERS, EXCLUDING WORD SPACES. SPACING BETWEEN INDIVIDUAL CHARACTERS SHALL BE 10 PERCENT MINIMUM AND 35 PERCENT MAXIMUM OF CHARACTER HEIGHT.
- LINE SPACING. SPACING BETWEEN THE BASELINES OF SEPARATE LINES OF CHARACTERS WITHIN A MESSAGE SHALL BE 135 PERCENT MINIMUM AND 170% MAXIMUM OF THE CHARACTER HEIGHT.

EXIT SIGNS (CBC 1013)

EXIT AND EXIT ACCESS DOORS SHALL BE MARKED BY AN APPROVED EXIT SIGN READILY VISIBLE FROM ANY DIRECTION OF EGRESS TRAVEL. EXIT SIGNS PLACEMENT SHALL BE SUCH THAT NO POINT IN AN EXIT ACCESS CORRIDOR OR EXIT PASSAGEWAY IS MORE THAN 100 FEET OR THE LISTED VIEWING DISTANCE FOR THE SIGN, WHICHEVER IS LESS, FROM THE NEAREST VISIBLE EXIT SIGN.

EXCEPTIONS:

- EXIT SIGNS ARE NOT REQUIRED IN ROOMS OR AREAS THAT REQUIRE ONLY ONE EXIT OR EXIT ACCESS.
- EXIT SIGNS ARE NOT REQUIRED IN GROUP U AND INDIVIDUAL SLEEPING UNITS OR DWELLING UNITS IN GROUPS R-1, R-2, R-3 OR R-3.1.

ILLUMINATION

- EXIT SIGNS SHALL BE INTERNALLY OR EXTERNALLY ILLUMINATED, EXCEPT THOSE REQUIRED BY SECTION 1013.4 NEED NOT BE PROVIDED WITH ILLUMINATION.
- INTERNALLY ILLUMINATED EXIT SIGNS: ELECTRICALLY POWERED, SELF-LUMINOUS AND PHOTOLUMINESCENT EXIT SIGNS SHALL BE LISTED AND LABELED IN ACCORDANCE WITH UL 924, AND SHALL BE INSTALLED IN ACCORDANCE WITH THE MANUFACTURER'S INSTRUCTIONS AND CHAPTER 27. EXIT SIGNS SHALL BE ILLUMINATED AT ALL TIMES.
- EXTERNALLY ILLUMINATED EXIT SIGNS SHALL HAVE PLAINLY LEGIBLE LETTERS NOT LESS THAN 6 INCHES HIGH WITH PRINCIPAL STROKES OF THE LETTERS NOT LESS THAN 3/4 INCH WIDE. THE WORD "EXIT" SHALL HAVE LETTERS WITH A WIDTH OF NOT LESS THAN 2 INCHES, EXCEPT FOR THE LETTER "I", AND THE MINIMUM SPACING SHALL NOT BE LESS THAN 3/8 INCH. LARGER SIGNS SHALL HAVE WIDTH, STROKE AND SPACING IN PROPORTION TO THEIR HEIGHT. THE WORD "EXIT" SHALL BE IN HIGH CONTRAST WITH THE BACKGROUND. THE FACE OF THE SIGN SHALL HAVE AN INTENSITY OF NOT LESS THAN 5 FOOTCANDLES, AND SHALL BE ILLUMINATED AT ALL TIMES.

RAISED CHARACTER AND BRAILLE EXIT SIGNS
TACTILE EXIT SIGNS SHALL BE REQUIRED AT THE FOLLOWING LOCATIONS:

- EACH GRADE LEVEL EXTERIOR EXIT DOOR REQUIRED TO COMPLY WITH THIS SECTION SHALL BE IDENTIFIED BY A TACTILE EXIT SIGN WITH THE WORD "EXIT".
- EACH EXIT DOOR THAT LEADS DIRECTLY TO A GRADE-LEVEL EXTERIOR EXIT BY MEANS OF A STAIRWAY OR RAMP SHALL BE IDENTIFIED WITH A TACTILE EXIT SIGN WITH THE FOLLOWING WORDS AS APPROPRIATE: "EXIT STAIR DOWN", "EXIT RAMP DOWN", "EXIT STAIR UP", "EXIT RAMP UP".
- EACH EXIT DOOR THAT LEADS DIRECTLY TO A GRADE-LEVEL EXTERIOR EXIT BY MEANS OF AN EXIT ENCLOSURE OR EXIT PASSAGEWAY; OR, FROM AN INTERIOR ROOM OR AREA TO A CORRIDOR OR HALLWAY; SHALL BE IDENTIFIED WITH A TACTILE EXIT SIGN WITH THE WORDS "EXIT ROUTE".
- EACH EXIT DOOR THROUGH A HORIZONTAL EXIT SHALL BE INDENTIFIED BY A SIGN WITH THE WORDS "TO EXIT".
- RAISED CHARACTER AND BRAILLE EXIT SIGNS SHALL COMPLY WITH CHAPTER 11B, SECTIONS 11B-703.1, 11B-703.2, AND 11B-703.5.

FLOOR LEVEL EXIT SIGNS
WHERE EXIT SIGNS ARE REQUIRED, APPROVED LOW-LEVEL EXIT SIGNS, ILLUMINATED INTERNALLY OR EXTERNALLY, SHALL BE PROVIDED IN ALL INTERIOR CORRIDORS OF GROUP A, I, E, R2.1, AND ALL AREAS SERVING GUEST ROOMS OF GROUP R, DIVISION 1 OCCUPANCIES.

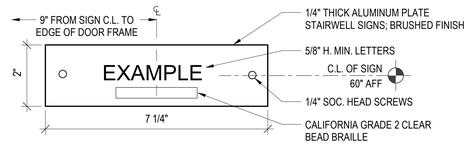

TACTILE EXIT SIGNS 3
6" = 1'-0"

TACTILE SIGNAGE IDENTIFYING PERMANENT ROOMS AND SPACES IS REQUIRED TO BE POSITIONED AT A MAXIMUM OF 60" TO THE BASELINE OF THE HIGHEST LINE OF RAISED ALPHA CHARACTERS AND MINIMUM 48" TO THE BASELINE OF THE BRAILLE CELLS.

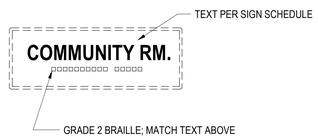

ROOM INDENTIFICATION SIGNS 2
3" = 1'-0"

THE INTERNATIONAL SYMBOL OF ACCESSIBILITY CONSISTS OF A WHITE FIGURE ON A BLUE BACKGROUND. THE BLUE SHALL BE COLOR 15090 IN FEDERAL STANDARD 595C.

EXCEPTION:

- THE APPROPRIATE ENFORCEMENT AGENCY MAY APPROVE OTHER COLORS TO COMPLEMENT DECOR OR UNIQUE DESIGN. THE SYMBOL CONTRAST SHALL BE LIGHT ON DARK OR DARK ON LIGHT

INTERNATIONAL SYMBOL OF ACCESSIBILITY 1
3" = 1'-0"

BASED ON CBC 11B ONLY

Designations *11B only* cite references to these code sections, but may apply to any project, whether publicly or privately funded.

PYATOK
1611 TELEGRAPH AVE.
SUITE 200
OAKLAND, CA 94612
T. 510.465.7010 | F. 510.465.8575
www.pyatok.com

THE UNITY COUNCIL
1900 FRUITVALE AVE
#2A
OAKLAND, CA 94601

2700 INTERNATIONAL

OAKLAND, CA 94601

STAMP:

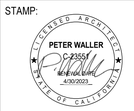

ISSUE SCHEDULE

100 SD	5/11/22
50 DD	7/15/22
100 DD	9/16/22
50 CD	11/18/22
PERMIT SET	12/09/22

REVISION SCHEDULE

NO.	ISSUE	DATE

JOB NUMBER:	1937
DRAWN BY:	Author
CHECKED BY:	Checker
ISSUE DATE:	12/09/22
SCALE:	As indicated

TITLE:
CBC 2019 - ACCESSIBILITY - SIGNAGE

SHEET:
G0.34

PRELIMINARY - Not for Construction -

© 2019 PYATOK ARCHITECTURE & URBAN DESIGN

12/8/2022 6:21:50 PM

RESIDENTIAL DWELLING UNITS (CBC 11B-809)

ACCESSIBLE ROUTES
- ACCESSIBLE ROUTES COMPLYING WITH DIVISION 4 SHALL BE PROVIDED WITHIN RESIDENTIAL DWELLING UNITS.

EXCEPTION:
- ACCESSIBLE ROUTES SHALL NOT BE REQUIRED TO OR WITHIN UNFINISHED ATTICS OR UNFINISHED BASEMENTS.

LOCATION
AT LEAST ONE ACCESSIBLE ROUTE SHALL CONNECT ALL SPACES AND ELEMENTS WHICH ARE A PART OF THE RESIDENTIAL DWELLING UNIT. WHERE ONLY ONE ACCESSIBLE ROUTE IS PROVIDED, IT SHALL NOT PASS THROUGH BATHROOMS, CLOSETS, OR SIMILAR SPACES.

TURNING SPACE
- ALL ROOMS SERVED BY AN ACCESSIBLE ROUTE SHALL PROVIDE A TURNING SPACE COMPLYING WITH CBC 11B-304.

EXCEPTION:
- TURNING SPACE SHALL NOT BE REQUIRED IN EXTERIOR SPACES 30 INCHES (760 MM) MAXIMUM IN DEPTH OR WIDTH.

KITCHEN
WHERE A KITCHEN IS PROVIDED, IT SHALL COMPLY WITH CBC 11B-804.

TOILET FACILITIES AND BATHING FACILITIES
AT LEAST ONE BATHROOM SHALL COMPLY WITH CBC 11B-603. NO FEWER THAN ONE OF EACH TYPE OF FIXTURE PROVIDED SHALL COMPLY WITH APPLICABLE REQUIREMENTS OF CBC 11B-603 THROUGH 11B-610. TOILET AND BATHING FIXTURES REQUIRED TO COMPLY WITH 11B-603 THROUGH 11B-610 SHALL BE LOCATED IN THE SAME TOILET AND BATHING AREA, SUCH THAT TRAVEL BETWEEN FIXTURES DOES NOT REQUIRE TRAVEL BETWEEN OTHER PARTS OF THE RESIDENTIAL DWELLING UNIT.

SUBSEQUENT BATHROOMS
IN RESIDENTIAL DWELLINGS WITH MORE THAN ONE BATHROOM, WHEN A BATH TUB IS INSTALLED IN THE FIRST BATHROOM AND A SHOWER COMPARTMENT IS PROVIDED IN A SUBSEQUENT BATHROOM, AT LEAST ONE SHOWER SHALL COMPLY WITH 11B-608.

RESIDENTIAL DWELLING UNITS WITH COMMUNICATION FEATURES
RESIDENTIAL DWELLING UNITS REQUIRED TO PROVIDE COMMUNICATION FEATURES SHALL COMPLY WITH THIS SECTION.
- BUILDING FIRE ALARM SYSTEM: WHERE A BUILDING FIRE ALARM SYSTEM IS PROVIDED, THE SYSTEM WIRING SHALL BE EXTENDED TO A POINT WITHIN THE RESIDENTIAL DWELLING UNIT IN THE VICINITY OF THE RESIDENTIAL DWELLING UNIT SMOKE DETECTION SYSTEM.
- RESIDENTIAL DWELLING UNIT SMOKE DETECTION SYSTEM: RESIDENTIAL DWELLING UNIT SMOKE DETECTION SYSTEMS SHALL COMPLY WITH CBC CHAPTER 9, SECTION 907.2.11.
- CARBON MONOXIDE DETECTION SHALL BE INSTALLED IN NEW BUILDINGS IN ACCORDANCE WITH SECTIONS 915.1.1 THROUGH 915.7. CARBON MONOXIDE DETECTION SHALL BE INSTALLED IN EXISTING BUILDINGS IN ACCORDANCE WITH CHAPTER 11 OF THE CALIFORNIA FIRE CODE. PURSUANT TO HEALTH AND SAFETY CODE SECTION 17926, CARBON MONOXIDE DETECTION SHALL BE INSTALLED IN ALL EXISTING GROUP R BUILDINGS AS REQUIRED IN SECTION 915.
- RESIDENTIAL DWELLING UNIT PRIMARY ENTRANCE: COMMUNICATION FEATURES SHALL BE PROVIDED AT THE RESIDENTIAL DWELLING UNIT PRIMARY ENTRANCE.
- NOTIFICATION: A HARD-WIRED ELECTRIC DOORBELL SHALL BE PROVIDED. A BUTTON OR SWITCH SHALL BE PROVIDED OUTSIDE THE RESIDENTIAL DWELLING UNIT PRIMARY ENTRANCE. ACTIVATION OF THE BUTTON OR SWITCH SHALL INITIATE AN AUDIBLE TONE AND VISIBLE SIGNAL WITHIN THE RESIDENTIAL DWELLING UNIT. WHERE VISIBLE DOORBELL SIGNALS ARE LOCATED IN SLEEPING AREAS, THEY SHALL HAVE CONTROLS TO DEACTIVATE THE SIGNAL.
- IDENTIFICATION: A MEANS FOR VISUALLY IDENTIFYING A VISITOR WITHOUT OPENING THE RESIDENTIAL DWELLING UNIT ENTRY DOOR SHALL BE PROVIDED AND SHALL ALLOW FOR A MINIMUM 180 DEGREE RANGE OF VIEW.
- SITE, BUILDING, OR FLOOR ENTRANCE: WHERE A SYSTEM, INCLUDING A CLOSED-CIRCUIT SYSTEM, PERMITTING VOICE COMMUNICATION BETWEEN A VISITOR AND THE OCCUPANT OF THE RESIDENTIAL DWELLING UNIT IS PROVIDED, THE SYSTEM SHALL COMPLY WITH CBC 708.4.

KITCHENS AND KITCHENETTES (CBC 11B-804)

CLEARANCE
CLEARANCES ARE MEASURED FROM THE FURTHEST PROJECTING FACE OF ALL OPPOSING BASE CABINETS, COUNTER TOPS, APPLIANCES, OR WALLS, EXCLUDING HARDWARE.

EXCEPTION:
SPACES THAT DO NOT PROVIDE A COOKTOP OR CONVENTIONAL RANGE SHALL NOT BE REQUIRED TO COMPLY WITH CBC SECTION 11B 804.2.

PASS THROUGH KITCHEN
IN PASS THROUGH KITCHENS WHERE COUNTERS, APPLIANCES OR CABINETS ARE ON TWO OPPOSING SIDES, OR WHERE COUNTERS, APPLIANCES OR CABINETS ARE OPPOSITE A PARALLEL WALL, CLEARANCE BETWEEN ALL OPPOSING BASE CABINETS, COUNTER TOPS, APPLIANCES, OR WALLS WITHIN KITCHEN WORK AREAS SHALL BE 40 INCHES MINIMUM. PASS THROUGH KITCHENS SHALL HAVE TWO ENTRIES.

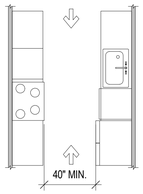

PASS THROUGH KITCHENS

U-SHAPED KITCHEN
IN U-SHAPED KITCHENS ENCLOSED ON THREE CONTIGUOUS SIDES, CLEARANCE BETWEEN ALL OPPOSING BASE CABINETS, COUNTER TOPS, APPLIANCES, OR WALLS WITHIN KITCHEN WORK AREAS SHALL BE 60 INCHES MINIMUM.

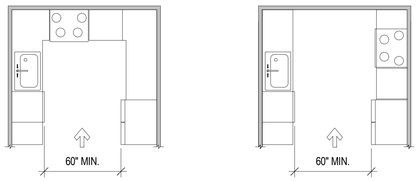

U-SHAPED KITCHENS

KITCHEN WORK SURFACE
- IN RESIDENTIAL DWELLING UNITS REQUIRED TO COMPLY WITH CBC 11B-809, AT LEAST ONE 30 INCHES WIDE MINIMUM SECTION OF COUNTER SHALL PROVIDE A KITCHEN WORK SURFACE.

CLEAR FLOOR OR GROUND SPACE
- A CLEAR FLOOR SPACE COMPLYING WITH 11B-305 POSITIONED FOR A FORWARD APPROACH SHALL BE PROVIDED. THE CLEAR FLOOR OR GROUND SPACE SHALL BE CENTERED ON THE KITCHEN WORK SURFACE AND SHALL PROVIDE KNEE AND TOE CLEARANCE COMPLYING WITH CBC 11B-306 .

EXCEPTION:
- CABINETRY SHALL BE PERMITTED UNDER THE KITCHEN WORK SURFACE PROVIDED THAT ALL OF THE FOLLOWING CONDITIONS ARE MET:
  1. THE CABINETRY CAN BE REMOVED WITHOUT REMOVAL OR REPLACEMENT OF THE KITCHEN WORK SURFACE;
  2. THE FINISH FLOOR EXTENDS UNDER THE CABINETRY; AND
  3. THE WALLS BEHIND AND SURROUNDING THE CABINETRY ARE FINISHED.

HEIGHT
- THE KITCHEN WORK SURFACE SHALL BE 34 INCHES MAXIMUM ABOVE THE FINISH FLOOR OR GROUND.

EXCEPTION:
- A COUNTER THAT IS ADJUSTABLE TO PROVIDE A KITCHEN WORK SURFACE AT VARIABLE HEIGHTS, 29 INCHES MINIMUM AND 36 INCHES MAXIMUM, SHALL BE PERMITTED.

EXPOSED SURFACES
- THERE SHALL BE NO SHARP OR ABRASIVE SURFACES UNDER THE WORK SURFACE COUNTERS.

SINKS
- SINKS SHALL COMPLY WITH CBC 11B-606.

STORAGE
- AT LEAST 50 PERCENT OF SHELF SPACE IN STORAGE FACILITIES SHALL COMPLY WITH CBC 11B-811.

APPLIANCES
WHERE PROVIDED, KITCHEN APPLIANCES SHALL COMPLY WITH THIS SECTION:
- CLEAR FLOOR OR GROUND SPACE. A CLEAR FLOOR OR GROUND SPACE COMPLYING WITH 11B-305 SHALL BE PROVIDED AT EACH KITCHEN APPLIANCE. CLEAR FLOOR OR GROUND SPACES SHALL BE PERMITTED TO OVERLAP.
- OPERABLE PARTS. ALL APPLIANCE CONTROLS SHALL COMPLY WITH CBC 11B-309.

EXCEPTIONS:
1. APPLIANCE DOORS AND DOOR LATCHING DEVICES SHALL NOT BE REQUIRED TO COMPLY WITH CBC 11B-309.4.
2. BOTTOM-HINGED APPLIANCE DOORS, WHEN IN THE OPEN POSITION, SHALL NOT BE REQUIRED TO COMPLY WITH CBC 11B-309.3.

DISHWASHER
- CLEAR FLOOR OR GROUND SPACE SHALL BE POSITIONED ADJACENT TO THE DISHWASHER DOOR. THE DISHWASHER DOOR, IN THE OPEN POSITION, SHALL NOT OBSTRUCT THE CLEAR FLOOR OR GROUND SPACE FOR THE DISHWASHER OR THE SINK

RANGE OR COOKTOP
- WHERE A FORWARD APPROACH IS PROVIDED, THE CLEAR FLOOR OR GROUND SPACE SHALL PROVIDE KNEE AND TOE CLEARANCE COMPLYING WITH 11B-306. WHERE KNEE AND TOE SPACE IS PROVIDED, THE UNDERSIDE OF THE RANGE OR COOKTOP SHALL BE INSULATED OR OTHERWISE CONFIGURED TO PREVENT BURNS, ABRASIONS, OR ELECTRICAL SHOCK. THE LOCATION OF CONTROLS SHALL NOT REQUIRE REACHING ACROSS BURNERS.

OVENS
- SIDE-HINGED DOOR OVENS: SIDE-HINGED DOOR OVENS SHALL HAVE THE WORK SURFACE REQUIRED BY CBC 11B-804.3 POSITIONED ADJACENT TO THE LATCH SIDE OF THE OVEN DOOR.
- BOTTOM-HINGED DOOR OVENS: BOTTOM-HINGED DOOR OVENS SHALL HAVE THE WORK SURFACE REQUIRED BY CBC 11B-804.3 POSITIONED ADJACENT TO ONE SIDE OF THE DOOR.
- CONTROLS: OVENS SHALL HAVE CONTROLS ON FRONT PANELS.

REFRIGERATOR/FREEZER
- COMBINATION REFRIGERATORS AND FREEZERS SHALL HAVE AT LEAST 50 PERCENT OF THE FREEZER SPACE 54 INCHES MAXIMUM ABOVE THE FINISH FLOOR OR GROUND.
- THE CLEAR FLOOR OR GROUND SPACE SHALL BE POSITIONED FOR A PARALLEL APPROACH TO THE SPACE DEDICATED TO A REFRIGERATOR/FREEZER WITH THE CENTERLINE OF THE CLEAR FLOOR OR GROUND SPACE OFFSET 24 INCHES MAXIMUM FROM THE CENTERLINE OF THE DEDICATED SPACE.

BATH TUBS (CBC 11B-607)

CLEARANCE
CLEARANCE IN FRONT OF BATHTUBS SHALL EXTEND THE LENGTH OF THE BATHTUB AND SHALL BE 48 INCHES WIDE MINIMUM FOR FORWARD APPROACH AND 30 INCHES WIDE MINIMUM FOR PARALLEL APPROACH. A LAVATORY COMPLYING WITH CBC 11B-606 SHALL BE PERMITTED AT THE CONTROL END OF THE CLEARANCE. WHERE A PERMANENT SEAT IS PROVIDED AT THE HEAD END OF THE BATHTUB, THE CLEARANCE SHALL EXTEND 12 INCHES MINIMUM BEYOND THE WALL AT THE HEAD END OF THE BATHTUB.

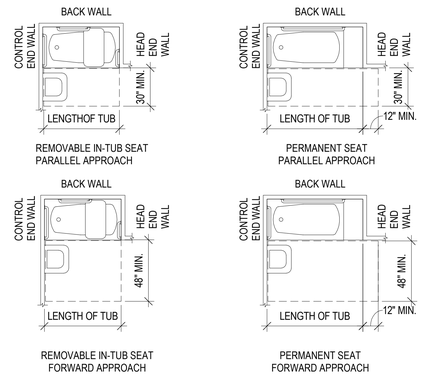

CLEARANCES FOR BATHTUBS

SEAT
A PERMANENT SEAT AT THE HEAD END OF THE BATHTUB OR A REMOVABLE IN-TUB SEAT SHALL BE PROVIDED.

GRAB BARS
WHERE SEPARATE GRAB BARS ARE REQUIRED ON ADJACENT WALLS AT A COMMON MOUNTING HEIGHT AN L- SHAPED OR U-SHAPED GRAB BAR SHALL BE PERMITTED.

EXCEPTION:
IN RESIDENTIAL DWELLING UNITS GRAB BARS SHALL NOT BE REQUIRED TO BE INSTALLED IN BATH TUBS LOCATED IN BATHING FACILITIES PROVIDED THAT REINFORCEMENT HAS BEEN INSTALLED IN WALLS AND LOCATED SO AS TO PERMIT THE INSTALLATION OF GRAB BARS.

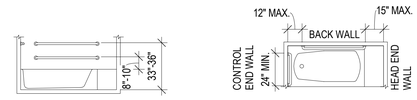

GRAB BARS FOR BATHTUBS WITH PERMANENT SEATS

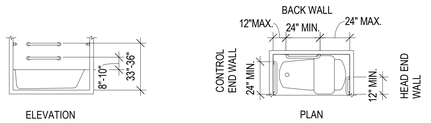

GRAB BARS FOR BATHTUBS WITH REMOVABLE IN-TUB SEATS

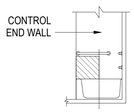

BATHTUB CONTROL LOCATION

CONTROLS
CONTROLS, OTHER THAN DRAIN STOPPERS, SHALL BE LOCATED ON AN END WALL. CONTROLS SHALL BE BETWEEN THE BATHTUB RIM AND GRAB BAR, AND BETWEEN THE OPEN SIDE OF THE BATHTUB AND THE CENTERLINE OF THE WIDTH OF THE BATHTUB. CONTROLS SHALL COMPLY WITH CBC 11B-309.4.

SHOWER SPRAY UNIT AND WATER
A SHOWER SPRAY UNIT WITH A HOSE 59 INCHES LONG MINIMUM THAT CAN BE USED BOTH AS A FIXED-POSITION SHOWER HEAD AND AS A HAND-HELD SHOWER SHALL BE PROVIDED. THE SHOWER SPRAY UNIT SHALL HAVE AN ON/OFF CONTROL WITH A NON-POSITIVE SHUT-OFF. IF AN ADJUSTABLE-HEIGHT SHOWER HEAD ON A VERTICAL BAR IS USED, THE BAR SHALL BE INSTALLED SO AS NOT TO OBSTRUCT THE USE OF GRAB BARS. BATHTUB SHOWER SPRAY UNITS SHALL DELIVER WATER THAT IS 120°F MAXIMUM.

LAVATORIES AND SINKS (11B-606)

CLEAR FLOOR SPACE
A CLEAR FLOOR SPACE COMPLYING WITH 11B-305, POSITIONED FOR A FORWARD APPROACH, AND KNEE AND TOE CLEARANCE COMPLYING WITH 11B-306 SHALL BE PROVIDED.

EXCEPTIONS:
- A PARALLEL APPROACH COMPLYING WITH 11B-305 SHALL BE PERMITTED TO A KITCHEN SINK IN A SPACE WHERE A COOK TOP OR CONVENTIONAL RANGE IS NOT PROVIDED AND TO WET BARS.
- IN RESIDENTIAL UNITS CABINETRY SHALL BE PERMITTED UNDER LAVATORIES AND KITCHEN SINKS PROVIDED THAT ALL THE FOLLOWING CONDITIONS ARE MET:
  (A) THE CABINETRY CAN BE REMOVED WITHOUT REMOVAL OR REPLACEMENT OF THE FIXTURE,
  (B) THE FLOOR EXTENDS UNDER THE CABINETRY, AND
  (C) THE WALLS BEHIND AND SURROUNDING THE CABINETRY ARE FINISHED.
- THE DIP OF THE OVERFLOW SHALL NOT BE CONSIDERED IN CONSIDERING KNEE AND TOE CLEARANCE - THE DIP OF THE OVERFLOW SHALL NOT BE CONSIDERED IN CONSIDERING KNEE AND TOE CLEARANCE.
- NO MORE THAN ONE BOWL OF A MULTI-BOWL SINK SHALL BE REQUIRED TO PROVIDE KNEE AND TOE CLEARANCE COMPLYING WITH SECTION 11B-306.

HEIGHT
LAVATORIES AND SINKS SHALL BE INSTALLED WITH THE FRONT OF THE HIGHER OF THE RIM OR COUNTER SURFACE 34 INCHES MAXIMUM ABOVE THE FINISH FLOOR OR GROUND.

FAUCETS
CONTROLS FOR FAUCETS SHALL COMPLY WITH 11B-309. HAND-OPERATED METERING FAUCETS SHALL REMAIN OPEN FOR 10 SECONDS MINIMUM.

EXPOSED PIPES AND SURFACES
WATER SUPPLY AND DRAIN PIPES UNDER LAVATORIES AND SINKS SHALL BE INSULATED OR OTHERWISE CONFIGURED TO PROTECT AGAINST CONTACT. THERE SHALL BE NO SHARP OR ABRASIVE SURFACES UNDER LAVATORIES AND SINKS.

ADJACENT SIDE WALL OR PARTITION
LAVATORIES, WHEN LOCATED ADJACENT TO A SIDE WALL OR PARTITION SHALL BE A MINIMUM OF 18 INCHES TO THE CENTERLINE OF THE FIXTURE SINK DEPTH . SINKS SHALL BE A MAXIMUM OF 6 1/2 INCHES DEEP.

SHOWERS (11B-608)

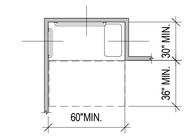

NOTE: INSIDE FINISHED DIMENSIONS MEASURED AT THE CENTER POINTS OF OPPOSING SIDES.

STANDARD ROLL-IN TYPE SHOWER COMPARTMENT SIZE AND CLEARANCE

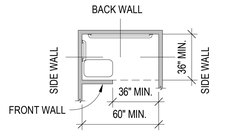

NOTE: INSIDE FINISHED DIMENSIONS MEASURED AT THE CENTER POINTS OF OPPOSING SIDES.

ALTERNATE ROLL-IN TYPE SHOWER COMPARTMENT SIZE AND CLEARANCE

GRAB BARS
WHERE SEPARATE GRAB BARS ARE REQUIRED ON ADJACENT WALLS AT A COMMON MOUNTING HEIGHT AN L- SHAPED OR U SHAPED GRAB BAR SHALL BE PERMITTED.

EXCEPTION:
IN RESIDENTIAL DWELLING UNITS GRAB BARS SHALL NOT BE REQUIRED TO BE INSTALLED IN BATHTUBS/SHOWERS LOCATED IN BATHING FACILITIES PROVIDED THAT REINFORCEMENT HAS BEEN INSTALLED IN WALLS AND LOCATED SO AS TO PERMIT THE INSTALLATION OF GRAB BARS.

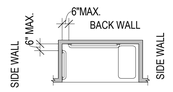

GRAB BARS FOR STANDARD ROLL-IN TYPE SHOWERS

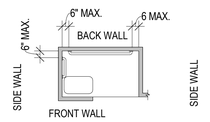

GRAB BARS FOR ALTERNATE ROLL-IN TYPE SHOWERS

SEATS
A FOLDING SEAT SHALL BE PROVIDED IN ROLL-IN TYPE SHOWERS AND TRANSFER TYPE SHOWERS.

EXCEPTION:
IN RESIDENTIAL DWELLING UNITS SEATS SHALL NOT BE REQUIRED TO BE INSTALLED IN SHOWER COMPARTMENTS. PROVIDED THAT REINFORCEMENT HAS BEEN INSTALLED IN WALLS AND LOCATED SO AS TO PERMIT THE INSTALLATION OF SEATS.

CONTROLS
CONTROLS AND FAUCETSSHALL ALLOW THE USER TO CLOSE AND OPEN THE WATER SUPPLY.OPERABLE PARTS SHALL BE OPERABLE WITH ONE HAND AND SHALL NOT REQUIRE TIGHT GRASPING, PINCHING, OR TWISTING OF THE WRIST.THE FORCE REQUIRED TO ACTIVATE OPERABLE PARTS SHALL BE 5 POUNDS MAXIMUM.OPERABLE PARTS OF THE SHOWER SPRAY UNIT, INCLUDING THEHANDLE, SHALL BE INSTALLED ON THE BACK WALL ADJACENT TO THE SEAT WALL 19 INCHES (483 MM) MINIMUM AND 27 INCHES MAXIMUM FROM THE SEAT WALL; AND SHALL BE LOCATED ABOVE THE GRAB BAR, BUT NO HIGHER THAN 48 INCHES ABOVE THE SHOWER FLOOR.

STANDARD ROLL-IN TYPE SHOWER COMPARTMENT CONTROL LOCATION

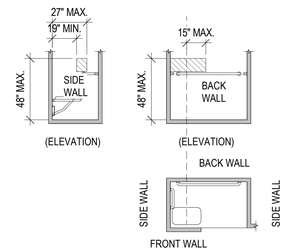

ALTERNATE ROLL-IN TYPE SHOWER COMPARTMENT CONTROL LOCATION

SHOWER SPRAY UNIT AND WATER
A SHOWER SPRAY UNIT WITH A HOSE 59 INCHES LONG MINIMUM THAT CAN BE USED BOTH AS A FIXED-POSITION SHOWER HEAD AND AS A HAND-HELD SHOWER SHALL BE PROVIDED. THE SHOWER SPRAY UNIT SHALL HAVE AN ON/OFF CONTROL WITH A NON-POSITIVE SHUT-OFF. IF AN ADJUSTABLE-HEIGHT SHOWER HEAD ON A VERTICAL BAR IS USED, THE BAR SHALL BE INSTALLED SO AS NOT TO OBSTRUCT THE USE OF GRAB BARS. SHOWER SPRAY UNITS SHALL DELIVER WATER THAT IS 120°F MAXIMUM.

THRESHOLDS
THRESHOLDS IN ROLL-IN TYPE SHOWER COMPARTMENTS SHALL BE 1/2 INCH HIGH MAXIMUM IN ACCORDANCE WITH CBC 11B-303.

SHOWER FLOOR OR GROUND SURFACE
SHALL BE SLOPED 1:48 MAXIMUM IN ANY DIRECTION. WHERE DRAINS ARE PROVIDED, GRATE OPENINGS SHALL BE 1/4 INCH MAXIMUM AND FLUSH WITH THE FLOOR SURFACE.

SOAP DISH
WHERE PROVIDED IT SHALL BE LOCATED ON THE CONTROL WALL AT 40 INCHES MAXIMUM ABOVE THE SHOWER FLOOR AND WITHIN THE REACH LIMITS FROM THE SEAT.

BASED ON CBC 11B ONLY

Designations *11B only* cite references to these code sections, but may apply to any project, whether publicly or privately funded.

PYATOK
1611 TELEGRAPH AVE.
SUITE 200
OAKLAND, CA 94612
T. 510.465.7010 | F. 510.465.8575
www.pyatok.com

THE UNITY COUNCIL
1900 FRUITVALE AVE
#2A
OAKLAND, CA 94601

2700 INTERNATIONAL
OAKLAND, CA 94601

STAMP:
LICENSED ARCHITECT
PETER WALLER
C-23551
4/30/2023
STATE OF CALIFORNIA

ISSUE SCHEDULE

100 SD	5/11/22
50 DD	7/15/22
100 DD	9/16/22
50 CD	11/18/22
PERMIT SET	12/09/22

REVISION SCHEDULE

NO.	ISSUE	DATE

JOB NUMBER:	1937
DRAWN BY:	Author
CHECKED BY:	Checker
ISSUE DATE:	12/09/22
SCALE:	1/4" = 1'-0"

TITLE:
CBC 2019 11B - ACCESSIBILITY - DWELLING UNITS

SHEET:
G0.35

PRELIMINARY - Not for Construction -

© 2019 PYATOK ARCHITECTURE & URBAN DESIGN

12/8/2022 6:21:53 PM

PARKING SPACES (CBC 11B-502) *(ALSO APPLIES TO CBC 1109A)*

11B ONLY

GENERAL
WHERE PARKING SPACES ARE MARKED WITH LINES, WIDTH MEASUREMENTS OF PARKING SPACES AND ACCESS AISLES SHALL BE MADE FROM THE CENTERLINE OF THE MARKINGS.
EXCEPTION: WHERE PARKING SPACES OR ACCESS AISLES ARE NOT ADJACENT TO ANOTHER PARKING SPACE OR ACCESS AISLE, MEASUREMENTS SHALL BE PERMITTED TO INCLUDE THE FULL WIDTH OF THE LINE DEFINING THE PARKING SPACE OR ACCESS AISLE.

VEHICLE SPACES
CAR AND VAN PARKING SPACES SHALL BE 216 INCHES LONG MINIMUM. CAR PARKING SPACES SHALL BE 108 INCHES WIDE MINIMUM, AND VAN PARKING SPACES SHALL BE 144 INCHES WIDE MINIMUM, SHALL BE MARKED TO DEFINE THE WIDTH, AND SHALL HAVE AN ADJACENT ACCESS AISLE.
EXCEPTION: VAN PARKING SPACES SHALL BE PERMITTED TO BE 108 INCHES WIDE MINIMUM WHERE THE ACCESS AISLE IS 96 INCHES WIDE MINIMUM.

ACCESS AISLES
ACCESS AISLES SERVING PARKING SPACES SHALL BE 60 INCHES WIDE MINIMUM. ACCESS AISLES SHALL ADJOIN AN ACCESSIBLE ROUTE. ACCESS AISLES SHALL BE PERMITTED ON EITHER SIDE OF THE PARKING SPACE EXCEPT FOR VAN PARKING SPACES WHICH SHALL HAVE ACCESS AISLES LOCATED ON THE PASSENGER SIDE OF THE PARKING SPACES. ACCESS AISLES SHALL BE MARKED WITH A BLUE PAINTED BORDERLINE AROUND THEIR PERIMETER.

FLOOR OR GROUND SURFACES ***11B ONLY***
PARKING SPACES AND ACCESS AISLES SERVING THEM SHALL COMPLY WITH 11B-302. ACCESS AISLES SHALL BE AT THE SAME LEVEL AS THE PARKING SPACES THEY SERVE. CHANGES IN LEVEL ARE NOT PERMITTED.
EXCEPTION: - SLOPES NOT STEEPER THAN 1:48 SHALL BE PERMITTED.

VERTICAL CLEARANCE
PARKING SPACES AND ACCESS AISLES AND VEHICULAR ROUTES SERVING THEM SHALL PROVIDE A VERTICAL CLEARANCE OF 98 INCHES MINIMUM. EXCEPTION: IN EXISTING MULTISTORY PARKING FACILITIES, CAR PARKING SPACES, ACCESS AISLES AND VEHICULAR ROUTES SERVING THEM SHALL PROVIDE A VERTICAL CLEARANCE OF 80 INCHES (2032 MM) MINIMUM. EXISTING VERTICAL CLEARANCE IN EXCESS OF 80 INCHES (2032 MM) AND LESS THAN 98 INCHES (2489 MM) SHALL BE MAINTAINED. THIS EXCEPTION SHALL NOT APPLY TO VAN PARKING SPACES, ACCESS AISLES, OR VEHICULAR ROUTES SERVING THEM.

IDENTIFICATION
PARKING SPACE IDENTIFICATION SIGNS SHALL INCLUDE THE INTERNATIONAL SYMBOL OF ACCESSIBILITY COMPLYING WITH **11B-703.7.2.1**. SIGNS IDENTIFYING VAN PARKING SPACES SHALL CONTAIN THE DESIGNATION "VAN ACCESSIBLE." SIGNS SHALL BE 60 INCHES (80 INCHES MIN. IF IN P.O.T.) MINIMUM ABOVE THE FINISH FLOOR OR GROUND SURFACE MEASURED TO THE BOTTOM OF THE SIGN.

RELATIONSHIP TO ACCESSIBLE ROUTES
PARKING SPACES AND ACCESS AISLES SHALL BE DESIGNED SO THAT CARS AND VANS, WHEN PARKED, CANNOT OBSTRUCT THE REQUIRED CLEAR WIDTH OF ADJACENT ACCESSIBLE ROUTES.

ADDITIONAL SIGNAGE
AN "UNAUTHORIZED PARKING" SIGN SHALL BE POSTED EITHER ; 1) IN A CONSPICUOUS PLACE AT EACH ENTRANCE TO AN OFFSET PARKING FACILITY OR 2) IMMEDIATELY ADJACENT TO ON SITE ACCESSIBLE PARKING AND VISIBLE FROM EACH PARKING SPACE

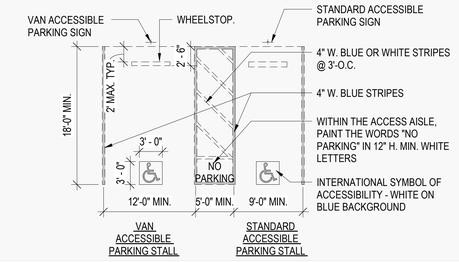

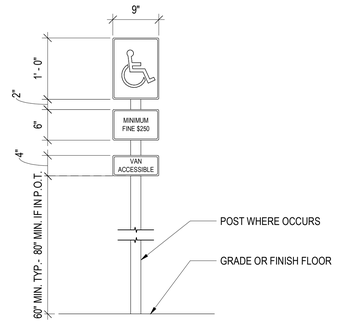

ACCESSIBLE PARKING SIGN 2
1" = 1'-0"

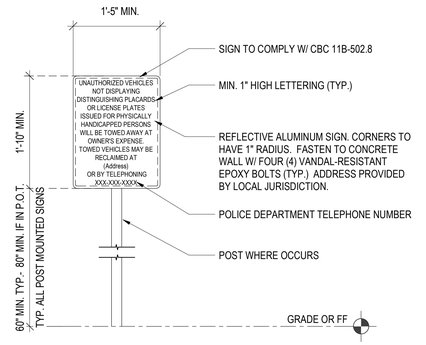

UNAUTHORIZED PARKING SIGNAGE 1
1" = 1'-0"

BASED ON CBC 11B ONLY

Designations *11B only* cite references to these code sections, but may apply to any project, whether publicly or privately funded.

PYATOK
1611 TELEGRAPH AVE.
SUITE 200
OAKLAND, CA 94612
T. 510.465.7010 | F. 510.465.8575
www.pyatok.com

THE UNITY COUNCIL
1900 FRUITVALE AVE
#2A
OAKLAND, CA 94601

2700 INTERNATIONAL
OAKLAND, CA 94601

STAMP:

ISSUE SCHEDULE

100 SD	5/11/22
50 DD	7/15/22
100 DD	9/16/22
50 CD	11/18/22
PERMIT SET	12/09/22

REVISION SCHEDULE

NO.	ISSUE	DATE

JOB NUMBER:	1937
DRAWN BY:	Author
CHECKED BY:	Checker
ISSUE DATE:	12/09/22
SCALE:	As indicated

TITLE:
CBC 2019 - ACCESSIBILITY - PARKING

SHEET:
G0.36

PRELIMINARY - Not for Construction -

© 2019 PYATOK ARCHITECTURE & URBAN DESIGN

12/8/2022 6:21:55 PM

ELEVATORS CBC 11B-407

GENERAL.
THEY SHALL BE PASSENGER ELEVATORS AS CLASSIFIED BY ASMEA17.1.ELEVATOR OPERATION SHALL BE AUTOMATIC.

ELEVATOR LANDING REQUREMENTS

HALL SIGNALS
VISIBLE AND AUDIBLE SIGNALS
- A VISIBLE AND AUDIBLE SIGNAL SHALL BE PROVIDED AT EACH HOISTWAY ENTRANCE TO INDICATE WHICH CAR IS ANSWERING A CALL AND THE CAR'S DIRECTION OF TRAVEL. WHERE IN-CAR SIGNALS ARE PROVIDED, THEY SHALL BE VISIBLE FROM THE FLOOR AREA ADJACENT TO THE HALL CALL BUTTONS.

VISIBLE SIGNALS
- VISIBLE SIGNAL FIXTURES SHALL BE CENTERED AT 72 INCHES MINIMUM ABOVE THE FINISH FLOOR OR GROUND. THE VISIBLE SIGNAL ELEMENTS SHALL BE A MINIMUM 2 1/2 INCHES HIGH BY 2 1/2" WIDE. SIGNALS SHALL BE VISIBLE FROM THE FLOOR AREA ADJACENT TO THE HALL CALL BUTTON.

AUDIBLE SIGNALS
- AUDIBLE SIGNALS SHALL SOUND ONCE FOR THE UP DIRECTION AND TWICE FOR THE DOWN DIRECTION, OR SHALL HAVE A VERBAL ANNOUNCIATOR THAT INDICATES THE DIRECTION OF TRAVEL.

FLOOR DESIGNATION
- FLOOR DESIGNATIONS SHALL BE PROVIDED ON BOTH JAMBS OF ELEVATOR HOISTWAY ENTRANCES. FLOOR DESIGNATIONS SHALL BE PROVIDED IN BOTH TACTILE CHARACTERS AND BRAILLE. TACTILE CHARACTERS SHALL BE 2 INCHES HIGH MINIMUM. A RAISED TACTILE STAR SHALL BE PROVIDED ON BOTH JAMBS AT THE MAIN ENTRY LEVEL.

CAR DESIGNATION SIGNS (11B-411.2.3.2)
CAR DESTINATION SIGNS SHALL BE PROVIDED ON BOTH JAMBS OF THE HOISTWAY IMMEDIATELY BELOW THE FLOOR DESIGNATION. CAR DESIGNATION SIGNS SHALL BE PROVIDED IN BOTH RAISED CHARACTERS AND BRAILLE.

FLOOR DESIGNATIONS ON JAMBS OF ELEVATOR HOISTWAY ENTRANCES

ELEVATOR DOOR REQUIREMENTS
TYPE
- ELEVATOR DOORS SHALL BE THE HORIZONTAL SLIDING TYPE.

OPERATION
- ELEVATOR HOISTWAY AND CAR DOORS SHALL OPEN AND CLOSE AUTOMATICALLY.

REOPENING DEVICE
- ELEVATOR DOORS SHALL BE PROVIDED WITH A REOPENING DEVICE THAT SHALL STOP AND REOPEN A CAR DOOR AND HOISTWAY DOOR AUTOMATICALLY IF THE DOOR BECOMES OBSTRUCTED.

HEIGHT
- THE DEVICE SHALL BE ACTIVATED BY SENSING AN OBSTRUCTION PASSING THROUGH THE OPENING AT 5 INCHES NOMINAL AND 29 INCHES NOMINAL ABOVE THE FINISH FLOOR.

DURATION
- DOOR REOPENING DEVICES SHALL REMAIN EFFECTIVE FOR 20 SECONDS MINIMUM.

DOOR DELAY
- ELEVATOR DOORS SHALL REMAIN FULLY OPEN IN RESPONSE TO A CAR CALL FOR 5 SECONDS MINIMUM.

WIDTH
- THE WIDTH OF ELEVATOR DOORS SHALL COMPLY WITH CBC TABLE 407.4.1.

ELEVATOR CAR REQUIREMENTS (CBC 11B-407)

CAR DIMENSIONS. INSIDE DIMENSIONS OF ELEVATOR CARS AND CLEAR WIDTH OF ELEVATOR DOORS SHALL COMPLY WITH TABLE 407.4.1.

FIGURE 407.4.1 ELEVATOR CAR DIMENSIONS

PLATFORM TO HOISTWAY CLEARANCE
- THE CLEARANCE BETWEEN THE CAR PLATFORM SILL AND THE EDGE OF ANY HOISTWAY LANDING SHALL BE 1 1/4 INCH MAXIMUM.

LEVELING
- EACH CAR SHALL BE EQUIPPED WITH A SELF-LEVELING FEATURE THAT WILL AUTOMATICALLY BRING AND MAINTAIN THE CAR AT FLOOR LANDINGS WITHIN A TOLERANCE OF 1/2 INCH UNDER RATED LOADING TO ZERO LOADING CONDITIONS.

ILLUMINATION
- THE LEVEL OF ILLUMINATION AT THE CAR CONTROLS, PLATFORM, CAR THRESHOLD AND CAR LANDING SILL SHALL BE 5 FOOT CANDLES (54 LUX) MINIMUM.

ELEVATOR LOBBY & CAB RAIL HEIGHTS (1)
1/4" = 1'-0"

ELEVATOR CAR CONTROLS

LOCATION.
CONTROLS SHALL BE LOCATED WITHIN ONE OF THE REACH RANGES SPECIFIED IN CBC 11B 308.

CLEAR FLOOR OR GROUND SPACE
A CLEAR FLOOR OR GROUND SPACE COMPLYING WITH SECTION 11B-305 SHALL BE PROVIDED AT CALL CONTROLS.

BUTTONS.
SIZE AND SHAPE
- BUTTONS SHALL HAVE A SQUARE SHOULDER , SHALL BE 3/4 INCH MINIMUM IN THEIR SMALLEST DIMENSION AND BE RAISED 1/8" ABOVE THE SURROUNDING SURFACE.

ARRANGEMENT
- BUTTONS SHALL BE ARRANGED WITH NUMBERS IN ASCENDING ORDER. WHEN 2 OR MORE COLUMNS ARE PROVIDED, THEY SHALL READ FROM LEFT TO RIGHT.

ILLUMINATION
- CAR CONTROL BUTTONS SHALL BE ILLUMINATED.

OPERATION
- CAR CONTROL BUTTONS SHALL BE ACTIVATED BY A MECHANICAL MOTION THAT IS DETECTABLE.

EMERGENCY CONTROLS
LOCATION
- EMERGENCY CONTROLS SHALL BE GROUPED AT THE BOTTOM OF THE PANEL ARRANGEMENT.

HEIGHT
- EMERGENCY CONTROL BUTTONS SHALL HAVE THEIR CENTERLINES 35 INCHES MINIMUM ABOVE THE FINISH FLOOR.

DESIGNATIONS AND INDICATORS OF CAR CONTROL

BUTTONS
TYPE
- CONTROL BUTTONS SHALL BE IDENTIFIED BY RAISED CHARACTERS OR SYMBOLS AND BRAILLE COMPLYING WITH CBC 11B 703.3.

LOCATION
- RAISED CHARACTERS OR SYMBOLS AND BRAILLE DESIGNATIONS SHALL BE PLACED IMMEDIATELY TO THE LEFT OF OF THE CONTROL BUTTON TO WHICH THE DESIGNATIONS APPLY.

SYMBOLS
- THE CONTROL BUTTON FOR THE EMERGENCY STOP, ALARM, DOOR OPEN, DOOR CLOSE, MAIN ENTRY FLOOR, AND PHONE SHALL BE IDENTIFIED WITH TACTILE SYMBOLS AND BRAILLE.

VISIBLE INDICATORS
- BUTTONS WITH FLOOR DESIGNATIONS SHALL BE PROVIDED WITH VISIBLE INDICATORS TO SHOW THAT A CALL HAS BEEN REGISTERED. THE VISIBLE INDICATION SHALL EXTINGUISH WHEN THE CAR ARRIVES AT THE DESIGNATED FLOOR.

BUTTON SPACING
- A MINIMUM CLEAR SPACE OF 3/8" OR OTHER SUITABLE MEANS OF SEPARATION SHALL BE PROVIDED BETWEEN ROWS OF CONTROL BUTTONS.

CAR POSITION INDICATORS
AUDIBLE AND VISIBLE CAR POSITION INDICATORS SHALL BE PROVIDED IN ELEVATOR CARS.

VISIBLE INDICATORS
SIZE
- CHARACTERS SHALL BE 1/2 INCH HIGH MINIMUM.

LOCATION
- INDICATORS SHALL BE LOCATED ABOVE THE CAR CONTROL PANEL OR ABOVE THE DOOR.

FLOOR ARRIVAL
- AS THE CAR PASSES A FLOOR SERVED BY THE ELEVATOR AND WHEN A CAR STOPS AT A FLOOR SERVED BY THE ELEVATOR, THE CORRESPONDING CHARACTER SHALL ILLUMINATE.

AUDIBLE INDICATORS
SIGNAL TYPE
- THE SIGNAL SHALL BE AN AUTOMATIC VERBAL ANNUNCIATOR WHICH ANNOUNCES THE FLOOR AT WHICH THE CAR IS ABOUT TO STOP.

SIGNAL LEVEL
- THE VERBAL ANNUNCIATOR SHALL BE 10 DB MINIMUM ABOVE AMBIENT, BUT SHALL NOT EXCEED 80 DB, MEASURED AT THE ANNUNCIATOR.

FREQUENCY
- THE VERBAL ANNUNCIATOR SHALL HAVE A FREQUENCY OF 300 HZ MINIMUM TO 3000 HZ MAXIMUM.

SUPPORT RAIL
A SUPPORT RAIL SHALL BE PROVIDED ON AT LEAST ONE WALL OF THE CAR.

LOCATION
- CLEARANCE BETWEEN SUPPORT RAILS AND ADJACENT SURFACES SHALL BE 1 1/2 INCH MINIMUM. TOP OF SUPPORT SHALL BE BETWEEN 31 AND 33 INCHES ABOVE THE FLOOR OF THE CAR. THE END OF THE SUPPORT RAIL SHALL BE 6 INCHES MAXIMUM FROM THE ADJACENT WALL.

SURFACES
- SUPPORT RAILS SHALL BE SMOOTH AND ANY SURFACE ADJACENT TO THEM SHALL BE FREE OF SHARP OR ABRASIVE ELEMENTS.

STRUCTURAL STRENGTH
- ALLOWABLE STRESSES SHALL NOT BE EXCEEDED FOR MATERIALS USED WHEN A VERTICAL OR HORIZONTAL FORCE OF 250 POUNDS IS APPLIED AT ANY POINT ON THE SUPPORT RAIL, FASTENER, MOUNTING DEVICE, OR SUPPORTING STRUCTURE.

NOTE: CAR CONTROL BUTTONS SHALL BE ILLUMINATED AND RAISED 1/8" ABOVE SURROUNDING SURFACE.

ELEVATOR CONTROL PANEL (CAB INTERIOR) (3)
3" = 1'-0"

ELEVATOR CALL BUTTON (5)
3" = 1'-0"

EMERGENCY COMMUNICATION
RAISED SYMBOL OR CHARACTER AND BRAILLE SHALL BE PROVIDED ADJACENT TO THE EMERGENCY COMMUNICATION DEVICE. EMERGENCY TWO-WAY COMMUNICATION SYSTEM BETWEEN THE ELEVATOR AND A POINT OUTSIDE THE HOISTWAY SHALL COMPLY WITH ASME A17.1.

NOTES
- IF TWO WAY INTERCOMMUNICATION DEVICE IS IN A CLOSED COMPARTMENT THEN DOOR MUST HAVE LEVER OR LOOP HARDWARE.
- EMERGENCY INTERCOMMUNICATIONS SHALL NOT REQUIRE VOICE COMMUNICATION.
- EMERGENCY INTERCOMMUNICATIONS SHALL BE MOUNTED 4'-0" A.F.F. MAX.
- ELEVATOR MUST BE EQUIPPED WITH DOOR OPENING DEVICE THAT REOPENS DOOR WHEN OBSTRUCTED DURING CLOSING AN AUTOMATIC DOOR REOPENING DEVICE MUST BE LOCATED VERTICALLY AT 5" AND 29" ABOVE THE THRESHOLD AND MUST BE ACTIVATED WHEN AN OBJECT PASSES THROUGH EITHER OF THE LINES.
- DOORS SHALL REMAIN FULLY OPEN WHEN ANSWERING A CALL FOR A MINIMUM OF 5 SECONDS.
- MUST HAVE AUDIBLE AND VERBAL ANNOUNCEMENT OR SIGNAL THAT SOUNDS TO TELL THE PASSENGER THAT THE CAR IS STOPPING OR PASSING A FLOOR.
- AUDIBLE SIGNAL:
  1. BELL = UP
  2. BELLS = DOWN
- CONTROL PANEL SHALL BE FASHIONED WITH RAISED LETTERS & NUMBERS WHITE ON BLACK BACKGROUND. CONTROL PANEL BUTTONS SHALL BE RAISED 1/8" W/ SQUARE SHOULDERS & ILLUMINATED.
- HIGHEST OPERABLE PART OF OF TWO-WAY COMMUNICATION SYSTEM MUST BE 48" MAX AFF.

ELEVATOR TWO-WAY COMM. DEVICE (2)
3" = 1'-0"

NOTE: ELEVATOR DIRECTION TO ALSO BE INDICATED BY AUDIBLE SIGNAL.

ELEVATOR INDICATOR LIGHTS (4)
3" = 1'-0"

BASED ON CBC 11B ONLY
Designations *11B only* cite references to these code sections, but may apply to any project, whether publicly or privately funded.

PYATOK
1611 TELEGRAPH AVE.
SUITE 200
OAKLAND, CA 94612
T. 510.465.7010 | F. 510.465.8575
www.pyatok.com

THE UNITY COUNCIL
1900 FRUITVALE AVE
#2A
OAKLAND, CA 94601

2700 INTERNATIONAL
OAKLAND, CA 94601

STAMP:
LICENSED ARCHITECT
PETER WALLER
C-23551
RENEWAL DATE
4/30/2023
STATE OF CALIFORNIA

ISSUE SCHEDULE

100 SD	5/11/22
50 DD	7/15/22
100 DD	9/16/22
50 CD	11/18/22
PERMIT SET	12/09/22

REVISION SCHEDULE

NO.	ISSUE	DATE

JOB NUMBER:	1937
DRAWN BY:	Author
CHECKED BY:	Checker
ISSUE DATE:	12/09/22
SCALE:	As indicated

TITLE:
CBC 2019 - ACCESSIBILITY - ELEVATORS

SHEET:
G0.37

PRELIMINARY - Not for Construction -

© 2019 PYATOK ARCHITECTURE & URBAN DESIGN

12/8/2022 6:21:58 PM

CITY OF OAKLAND

DALZIEL BUILDING • 250 FRANK H. OGAWA PLAZA • SUITE 3315 • OAKLAND, CALIFORNIA 94612

Planning and Building Department (510) 238-3941
Bureau of Planning FAX (510) 238-6538
TDD (510) 238-3254

January 28, 2021

Ms. Aubra Levin
The Unity Council
1900 Fruitvale Avenue, Suite #2A
Oakland, CA. 9461

RE: Case File No. PLN20152 / TPM 11139: 2700 International Boulevard between 27th Avenue & Mitchell Street. APN: 025-0712-019-02 & 025-0712-014-00 through 025-0712-017-00

Dear Ms. Levin,

Your application, as described below, has been **APPROVED** for the reasons stated in Attachment A, which contains the findings required to support this decision. Attachment **B** contains the Conditions of Approval for the project. This decision is effective ten (10) days after the date of this letter unless appealed as explained below.

The following table summarizes the proposed project:

Proposal:	The proposal is to demolish a three-story medical building and two-story office building and construct a six-story mixed-use building. The project will include 6,933 sq. ft. of ground floor commercial space, 74 very-low/low-income affordable units and one manager's unit for a total of 75 residential units, as well as 32 parking spaces. The project will include a 6% density bonus with development waivers for following items: 1) off-street parking, 2) building height, 3) required group open space, 4) street side setback, 5) interior side setback, 6) rear setback, 7) transitory setback and 8) residential off-street loading berth. The proposal also includes a Tentative Parcel Map to merge seven lots with five assessor parcel numbers into one parcel.
Planning Permits Required:	Regular Design Review for new construction of a mixed-use development and a Tentative Parcel Map
General Plan:	Community Commercial/Mixed Housing Type Residential
Zoning:	CC-2/ RM-2
Environmental Determination:	Exempt per CEQA Guidelines Sections 15332- In fill Development and 15183- Project Consistent with a Community Plan or Zoning.
Historic Status:	OCH: Rating F3
City Council District:	5

If you, or any interested party, seeks to challenge this decision, an appeal **must** be filed by no later than ten (10) calendar days from the date of this letter, by **4:00 p.m. on February 8, 2021**. An appeal shall be on a form provided by the Bureau of Planning of the Planning and Building Department, and submitted via email to: (1) **Jason Madani, Planner III, at jmadani@oaklandca.gov,** (2) **Robert Merkamp, Zoning Manager, at** Rmerkamp@oaklandca.gov**,** and (3) Catherine Payne, Development Planning Manager, at Cpayne@oaklandca.gov. The appeal form is available online at

https://www.oaklandca.gov/documents/appeal-application-form. The appeal shall state specifically wherein it is claimed there was error or abuse of discretion by the Zoning Manager or decision-making body or wherein the decision is not supported by substantial evidence. Applicable appeal fees in the amount of **$ 2404.01** in accordance with the City of Oakland Master Fee Schedule must be paid within five (5) calendar days **February 16, 2021** of filing the appeal**.**

If the fifth (5th) calendar day falls on a weekend or City holiday, appellant will have until the end of the following City business day to pay the appeal fee. Failure to timely appeal (or to timely pay all appeal fees) will preclude you, or any interested party, from challenging the City's decision in court. The appeal itself must raise each and every issue that is contested, along with all the arguments and evidence in the record which supports the basis of the appeal; failure to do so may preclude you, or any interested party, from raising such issues during the appeal and/or in court. However, the appeal will be limited to issues and/or evidence presented to the Zoning Manager prior to the close of the previously noticed public comment period on the matter. For further information, see the attached Interim City Administrator Emergency Order No. 3 and Interim Procedures for Appeals of City Planning Bureau Decisions for Development Projects.

If the ten (10) day appeal period expires without an appeal, you are expected to contact case planner **Jason Madani** in order to receive the signed Notice of Exemption (NOE) certifying that the project has been found to be exempt from CEQA review. It is your responsibility to record the NOE and the Environmental Declaration at the Alameda County Clerk's office at 1106 Madison Street, Oakland, CA 94612, at a cost of made payable to the Alameda County Clerk. Please bring the original NOE related documents and five copies to the Alameda County Clerk, and return one date stamped copy to the Bureau of Planning, to the attention of **Jason Madani, Planner III**. Pursuant to Section 15062(d) of the California Environmental Quality Act (CEQA) Guidelines, recordation of the NOE starts a 35-day statute of limitations on court challenges to the approval under CEQA. The NOE will also be posted on the City website at https://aca.accela.com/OAKLAND/Welcome.aspx.

If you have any questions, please contact the case planner, **Jason Madani, Planner III** at (510)238-4790 or **jmadani@oaklandca.gov ,** however, this does not substitute for filing of an appeal as described above.

Very Truly Yours,

ROBERT D. MERKAMP
Zoning Manager

CC: Pyatok Architects
Peter Waller: pwaller@pyatok.com
Mikki Asada: masada@pyatok.com
Echo Bergquist: ebergquist@unitycouncil.org
Raymond Hebert: DOT: rhebert@oaklandca.gov
Negine Malboubi; DOT: nmalboubi@oaklandca.gov
Ellen Ellsworth DOT: eellsworth@oaklandca.gov
Mulvey, Christia; Department of Housing: CMulvey@oaklandca.gov

Attachments:
A. Findings for Design Review, subdivision and CEQA Infill Exemption
B. Conditions of Approval, including Standard Conditions of Approvals
C. Interim City Administrator Emergency Order No. 3 and Interim Procedures for Appeals of City Planning Bureau Decisions for Development Projects

ATTACHMENT A: FINDINGS

This proposal meets all the required findings under the Regular Design Review Criteria of the Oakland Planning Code (OMC Sec. 17.136.050(A) and Section 16.04.010 of the Oakland Subdivision Regulations (OMC Title 16) and In-Fill Development Exemption Findings as set forth below and which are required to approve your application. Required findings are shown in **bold** type; reasons your proposal satisfies them are shown in normal type.

17.136.050 A - RESIDENTIAL DESIGN REVIEW CRITERIA:

1. The proposed design will create a building or set of buildings that are well related to the surrounding area in their setting, scale, bulk, height, materials, and textures.

The project is located on International Boulevard between 27th Avenue and Mitchell Street. The site is primarily within the CC-2 Zone and backs up to the RM-2 Zone along the northern boundary. The building across 27th Avenue is an eight-story medical office building. The building across Mitchell Street is a one-story multi-family building. Directly across International Blvd. is a three-story school gymnasium and five-story senior apartment building. There is no consistent setting, bulk, or height, and the area exhibits a variety of architectural styles and materials.

The existing site is occupied by two commercial buildings which will be demolished. The Unity Council proposes to develop a mixed-use building on the 26,778 sq. ft. parcel, with five-stories of 100% affordable housing units (75) over a first floor podium accommodating approximately 7,000 sq. ft. of commercial space, parking and services. On-site parking is provided in an enclosed garage located behind the commercial space. The project would provide a total of 32 parking stalls within the garage including 12 stalls for commercial use and 20 stalls for residential use. The project would provide ten short-term bicycle parking spaces, and 40 long-term bicycle parking spaces.

Staff has worked with the architect to achieve a building composition that provides visual interest while better relating to the surrounding area in setting, scale, height, materials and textures. The building's mass steps down in height; the taller six-story mass along International Boulevard transitions to a one-story building next to the adjacent RM-2 Zone. This tiered stepping maintains solar access to the neighboring residences beyond the northern boundary and also shelters a proposed open space courtyard above the podium. The vertical offset at the podium level and up to the roof serves to lighten the building mass, and two corner roof top elements will articulate the building elevations. The central courtyard extends to the southern façade, further breaking up the mass and allowing visual access to the sidewalk below. A trellis fence along the northern side will minimize potential privacy impacts on the adjacent neighboring property. The existing narrow sidewalk along International Boulevard will be widened. The proposed project's façade is a brick material and cement plaster. The brick decorative pattern and the brick's natural texture is further enhanced by different thickness of bricks to create depth in the façade. The ground floor is cement plaster with a horizontal metal canopy to provide shading. The transom window rhythm along the pedestrian level, inset storefront spaces and tall windows and doors at the ground floor complies with Design Guidelines for Corridors and Commercial Areas. The residential windows from 2nd floor to 6th floor are vinyl by providing 2" recessed from exterior walls.

The project will provide additional affordable housing for the City of Oakland at large and will enhance the public safety, security and appearance of this neighborhood. This area has a mix of multi-family dwellings and commercial buildings consisting of one to six stories, with the Planning Code and General Plan envisioning new development to be much higher; thus, this proposed project will be compatible with existing and future development. The project is well related to the area in materials and textures and adequately reduces the mass and bulk as mentioned above.

The project qualifies under the affordable housing state law for concessions/waivers from otherwise applicable development standards. The project will use concessions/waivers to make this project feasible as discussed in the Finding below.

2. The proposed design will protect, preserve, or enhance desirable neighborhood characteristics.

As discussed above, the area has no consistent setting, height, bulk, materials or architectural style. The area contains commercial, residential and civic uses. As such, the proposed mixed-use building, with affordable units, will enhance the neighborhood's desirable characteristics. The proposal's ground floor commercial space and residential units will provide a service to the community and the City of Oakland at large. The proposed exterior will blend in well with the surrounding buildings and relate to the recently approved mixed-use projects down the street by providing a strong visual element on International Boulevard as seen from the street.

3. The proposed design will be sensitive to the topography and landscape.

The proposed mixed-use development is located on a flat lot, and as such, there is no topography**.** Grading would include minimal surface preparation, utility connections and excavation for the foundation, footings and utility services.

There are five trees within the buildable area and along the street to be removed. The project proposes new street trees within the sidewalk on International Blvd and 27th Avenue and Mitchell Street (see Conditions of Approval). Therefore, the proposed design is sensitive to the topography and landscape**.**

4. If situated on a hill, the design and massing of the proposed building relates to the grade of the hill.

The proposed mixed-use development is located on a flat lot, and so, this finding is not applicable.

5. The proposed design conforms in all significant respects with the Oakland General Plan and with any applicable design review guidelines or criteria, district plan or development control map which has been adopted by the Planning Commission or City Council.

The subject site is in the Community Commercial land use classification of the Land Use and Transportation Element (LUTE) of the General Plan. This classification is intended to create, maintain, and enhance areas suitable for a wide variety of commercial and institutional operations along the City's major corridors and in shopping districts or centers. Community Commercial areas may include neighborhood center uses and larger scale retail and commercial uses, such as auto related businesses, business and personal services, health services and medical uses, educational facilities, and entertainment uses. Community Commercial areas can be complemented by the addition of urban residential development and compatible mixed-use development. The project is located in the CC-2 Zone which permits one unit for every 375 sq. ft. and 225 sq. ft. of lot area and would allow a maximum density of 96 units.

The project will be 100% affordable housing. The Planning Code and state law provisions are intended to encourage construction of affordable housing by offering incentives and/or concessions/waivers to a developer of a housing development that constructs a specified percentage of affordable units. Pursuant to Section 17.107.090, the Project qualifies for eight waivers of the development standards. Specifically, the Project includes the following waivers:

Parking reduction

The Oakland Planning Code requires a minimum of 0.5 parking spaces per affordable housing unit in a Transit Accessible Area, resulting in a requirement of 44 residential parking spaces for this project. The associated commercial space has an additional off-street parking requirement of 12 spaces (1 stall per 600 sq. ft.). The total requirement for this project is 56 parking spaces.

The applicant is requesting a waiver to decrease the maximum required parking spaces from 56 to 32 parking spaces. The decrease of the parking requirement is necessary to accommodate the full range of affordable housing and mixed-use program proposed.

In addition to the parking, the Planning Code also requires active ground floor commercial uses along International Boulevard. The ground floor commercial retail space satisfies this requirement; however, with inclusion of a viable commercial space, the commercial space's required parking, residential lobby and utility areas, there is insufficient

physical space on the ground level to also provide 44 residential parking spaces. The development standard waiver is consistent with and enabled under the City's Planning Code and the state law to encourage and facilitate the construction of affordable housing.

Building Height:

Current zoning limits the site to 60' in height.

The project requests a waiver to exceed the allowable building stories from 60' to 74'-8". The project aims to provide affordable housing for a diverse group of individuals in age and family size which is reflected in the breadth of the unit mix (47% one-bedroom, 28% two-bedroom and 25% three-bedroom units) and the substantial number of two and three-bedroom units. The unit sizes provided are consistent with typical square footages of similar affordable housing projects. If the building were limited to 60', the project would provide less affordable units, less family-size units, and less than the overall residential density allowed on the site. Therefore, the development standard waiver is consistent with and enabled under the City's Planning Code and the State Law to encourage and facilitate the construction of affordable housing.

Open Space reduction

First, the project proposes 7,354 sq. ft. of group open space where 11,250 sq. ft. of group open space is required by Planning Code Section 17.126.030.B. Second, of the 7,354 sq. ft. of group open space proposed on the podium, 1,939 sq. ft. is covered by the 3rd floor units above. This portion of the exterior gathering area does not qualify per the Planning Code definition of 'group usable open space' because it is not open to the sky above.

The applicant is requesting a concession/waiver to reduce the required group open space from 11,250 sq. ft. to 5,415 sq. ft.

The project would physically prelude the development at the density given the need to include ground floor parking area for both the residential and commercial activities as well as active commercial ground floor retail space. While open space could have been located on the roof, this area is largely taken up by mechanical equipment and roof drainage and would have increased the height of the building increasing costs. This waiver is consistent with and enabled under the City's Planning Code and the State Law to encourage and facilitate the construction of affordable housing.

Set back reductions

a) Street side Set Back:

The Planning Code requires a 10' street side setback on along Mitchell Street and 27th Ave.

The applicant is requesting a waiver to reduce the street side setback to 5'-9" for a portion of the building along these frontages.

To accommodate the increased density, and to maximize open space on the podium and on-site parking on ground floor, it is necessary to decrease the street side setback on Mitchell Street and 27th Avenue. If the project were to maintain a 10' setback along Mitchell Street, three parking stalls would be lost, the unit sizes would be reduced or units eliminated to accommodate the same number of two-three bedroom units and/or the courtyard would be reduced by approximately 589 sq. ft. On the 27th Avenue side, maintaining the street side setback would result in same issues minus the loss of parking. Furthermore, the street side setback is eliminated at the intersection of 27 Ave. and International Blvd. to provide more prominent corner to the commercial frontage which is also a requirement. In sum, providing this setback would significantly reduce the available square footage for ground floor programing/parking reduction as well as reduction of residential units above.

b) Interior side Set Back:

The Planning Code requires an interior side setback of 5'.

The applicant is requesting a waiver to reduce the street side setback to 2' along this frontage.

To accommodate the increased density, and to maximize open space and onsite parking, it is necessary to decrease the interior side setback from 5' to 2'-0". This rear inside-corner area is bordered by neighboring sheds and a full-height fence, not residential living space. A diminished interior side setback helps maintain a desired perimeter barrier for neighboring lots. Providing this setback would reduce the available square footage for ground floor programing/parking reduction.

c) Rear Set Back:

The Planning Code requires a 15' rear setback.

The applicant is requesting a waiver to reduce the rear yard setback to 1-2'.

To accommodate the increased density and to maximize open space and on-site parking, it is necessary to decrease the rear setback from 15 feet to 1-2 feet minimum. If a 15' rear setback was maintained across the lot's rear boundary, this would significantly impact the ground floor program space and open space at the podium level.

The reduction of street side, interior and rear setbacks is necessary to accommodate the full range of affordable housing and mixed-use program proposed. These development standard reductions are consistent with and enabled under the City's Planning Code and the State Law to encourage and facilitate the construction of affordable housing.

Transitory Setback:

The Planning Code requires a transitory setback requirement of 15' rear setback from the property line extending 30' vertical, then transitioning to a 45 Degree sloping plane.

The applicant is requesting a concession/waiver to reduce the transitory setback area and allow portions of the units to intrude into the sloping plane.

The building "steps down" in massing, with the majority of its height along International Boulevard and decreasing heights closer to the residential single-family houses on the northern boundary (rear) adjacent to the RM-2 Zone. To accommodate increased density, it is necessary to modify the rear transitory setback. The site plan and sections show that the proposed building's setback on levels 2-3, is 15-17' measured from the neighboring residential buildings, which are separated from the property line by existing drive aisles. The proposed building "wings" step back from the neighboring residential houses another +12' on Level 4 and +17.5' on Level's 5-6. This reduces the solar impact of the proposed building on neighboring houses as show in the shadow studies. If the baseline transitory setback were maintained, a significant loss in residential units would occur or another story be required to maintain the 75 affordable units. Adding another story is cost prohibitive as it would change the construction type and require additional investment in vertical circulation. As the maintaining the transition setback plane would physically preclude the development, this reduction is consistent with and enabled under the City's Planning Code and the State Law to encourage and facilitate the construction of affordable housing.

Residential Off-Street Loading Waiver

The Planning Code requires one off-street loading berth required in all zones for Residential Activities and total of floor area of facilities that are 50,000 square feet or more.

The applicant is requesting a waiver for the loading berth.

Providing the loading berth would significantly reduce the available square footage for ground floor programing/parking reduction. Furthermore, including a loading berth that meets the height requirements for the loading area and trucks anticipated would increase the height of the building at the ground floor and likely require a reduction in units or increase in height. These development standard reductions are consistent with and enabled under the City's Planning Code and the State Law to encourage and facilitate the construction of affordable housing.

The proposed project is, therefore, consistent with the intent of the General Plan as well as the following objectives and policies:

Policy N1.8 Making Compatible Development. The height and bulk of commercial development in "Community Commercial" areas should be compatible with that which is allowed for residential development.

Policy N3.1 – Facilitating Housing Construction – Facilitating the construction of housing units should be considered a high priority for the City of Oakland.

Policy N3.2 – Encourage In-fill Development – In order to facilitate the construction of needed housing units, in-fill development that is consistent with the General Plan should take place throughout the City of Oakland.

Objective N3- To encourage the construction, conservation, and enhancement of housing resources in order to meet the current and future needs of the Oakland community. The proposal provides 75 affordable residential units and commercial ground floor for the Oakland community.

Objective N6- Encourage a mix of housing costs, unit sizes, types and ownership structures. The proposal provides a mix of one, two and three bedrooms residential affordable units.

SECTION 16.04.010, PURPOSE:

"…ensure that the development of subdivisions is consistent with the goals and policies of the Oakland General Plan."

See findings above.

CALIFORNIA GOVERNMENT CODE 66474 (CHAPTER 4, SUBDIVISION MAP ACT) TENTATIVE MAP FINDINGS (SECTION 16.08.030 O.M.C.):

A legislative body of a city or county shall deny approval of a tentative map, or a parcel map for which a tentative map was not required, if it makes any of the following findings:

a. **That the proposed map is not consistent with applicable general and specific plans as specified in Section 65451.**

See finding above.

b. **That the design or improvement of the proposed subdivision is not consistent with applicable general and specific plans.**

See finding above.

c. **That the site is not physically suitable for the type of development.**

There are no known physical constraints that would make the site unsuitable for development. The proposal is a flat site in an urban area surrounded by existing development connected to existing utilities. The project will involve only minimal grading within the building footprint to construct the project. The site is physically suitable for the type of development.

d. **That the site is not physically suitable for the proposed density of development.**

The subject site is in the CC-2 and RM-2 Zones, which permits one unit for every 375 sq. ft of lot area in CC-2 zone, and 225 sq. ft. of the lot area of site within the RM-2 Zone with a Land Use and Transportation General Plan land use designation of Community Commercial which allows a maximum density of 96 residential units within the 26,778 sf of the subject site. The proposed 75-units mixed-use residential development meets the residential density allowed by the Zone and General Plan. Furthermore, the site is located in an urban area surrounded by development and with access to public services and infrastructure, so the site is physically suitable for the proposed density.

e. **That the design of the subdivision or the proposed improvements are likely to cause substantial environmental damage or substantially and avoidably injure fish or wildlife or their habitat.**

The subject site is located in an urbanized area and will be improved with the proposed development. There is no known fish or wildlife habitat on the site. Given the size of the lot and former use, that the development is surrounded by residential uses, and the limited vegetation, the project is unlikely to injure wildlife or habitat.

f. **That the design of the subdivision or type of improvements is likely to cause serious public health problems.**

The proposed project shall be required to comply with Building Code and Fire Prevention requirements to protect public health and safety. No serious public health problems are anticipated from the proposed subdivision.

g. **That the design of the subdivision or the type of improvements will conflict with easements acquired by the public at large, for access through or use of, property within the proposed subdivision. In this connection, the governing body may approve a map if it finds that alternate easement, for access or for use, will be provided, and that these will be substantially equivalent to ones previously acquired by the public. This subsection shall apply only to easements of record or to easements established by judgment of a court of competent jurisdiction and no authority is hereby granted to a legislative body to determine that the public at large has acquired easement for access through or use of property within the proposed subdivision**.

This finding is not applicable. There are no public easements on the property.

h. **The design of the subdivision provides to the extent feasible, for future passive or natural heating or cooling opportunities in the subdivision:**

Energy efficient techniques such as south facing fenestration has been incorporated into the site planning and building designs to take advantage of natural solar heating and cooling opportunities.

SECTION 16.24.040 LOT DESIGN STANDARDS.

Lot design shall be consistent with the provisions of Section 16.04.010, Purpose, and the following provisions:

A. No lot shall be created without frontage on a public street, as defined by Section 16.04.030, except:

1. Lots created in conjunction with approved private access easements; or
2. A single lot with frontage on a public street by means of a vehicular access corridor provided that in all cases the corridor shall have a minimum width of twenty (20) feet and shall not exceed three hundred (300) feet in length. Provided further, the corridor shall be a portion of the lot it serves, except that its area (square footage) shall not be included in computing the minimum lot area requirements of the zoning district.

The proposal is to merge seven lots into one lot. The existing lots have and the merged lot will have frontage onto public streets (International Blvd., and 27th Avenue, and Mitchell Street).

CITY OF OAKLAND CONDITIONS OF APPROVAL PAGES 1 - 4 (1)

12" = 1'-0"

12/8/2022 6:22:00 PM

PYATOK
1611 TELEGRAPH AVE.
SUITE 200
OAKLAND, CA 94612
T. 510.465.7010 | F. 510.465.8575
www.pyatok.com

THE UNITY COUNCIL
1900 FRUITVALE AVE
#2A
OAKLAND, CA 94601

2700 INTERNATIONAL

OAKLAND, CA 94601

STAMP:

LICENSED ARCHITECT PETER WALLER C-23554 4/30/2023 STATE OF CALIFORNIA

ISSUE SCHEDULE

100 SD	5/11/22
50 DD	7/15/22
100 DD	9/16/22
50 CD	11/18/22
PERMIT SET	12/09/22

REVISION SCHEDULE

NO.	ISSUE	DATE

JOB NUMBER:	1937
DRAWN BY:	MA, DV, TN, MO, SP
CHECKED BY:	Checker
ISSUE DATE:	12/09/22
SCALE:	12" = 1'-0"

TITLE:

CONDITIONS OF APPROVAL

SHEET:

G0.40

PRELIMINARY - Not for Construction -

© 2019 PYATOK ARCHITECTURE & URBAN DESIGN

B. The side lines of lots shall run at right angles or radially to the street upon which the lot fronts, except where impractical by reason of unusual topography.

All seven existing lots will be merged into one lot. The new property lines will be perpendicular to the street frontage.

C. All applicable requirements of the zoning regulations shall be met.

The project meets all requirements of the CC-2 and RM-2 Zones, such as street frontage, lot width and lot size requirements.

D. Lots shall be equal or larger in measure than the prevalent size of existing lots in the surrounding area except:
1. Where the area is still considered acreage;
2. Where a deliberate change in the character of the area has been initiated by the adoption of a specific plan, a change in zone, a development control map, or a planned unit development.

The project consists of merging seven lots into one lot. As the new lot will be larger than the previous seven lots, this finding is met.

E. Lots shall be designed in a manner to preserve and enhance natural out-croppings of rock, specimen trees or group of trees, creeks or other amenities.

There are no natural out-croppings of rock, specimen trees or creeks, or other known amenities located on the site. Therefore, this finding is not applicable.

CITY OF OAKLAND
CALIFORNIA ENVIRONMENTAL QUALITY ACT (CEQA)
CLASS 32 (IN-FILL DEVELOPMENT) EXEMPTION FINDINGS

CEQA, or the California Environmental Quality Act, is a statute that requires state and local agencies to identify the significant environmental impacts of their actions and to avoid or mitigate those impacts, if feasible. Categorical exemptions are descriptions of types of projects which the Secretary of the Resources Agency of the State of California has determined do not have a significant effect on the environment, and therefore, are not subject to further environmental review under CEQA.

The Class 32 exemption (Section 15332 of the State CEQA Guidelines) is intended to promote infill development within urbanized areas. The class consists of environmentally benign in-fill projects which are consistent with local general plan and zoning requirements. This class is not intended to be applied to projects which would result in any significant traffic, noise, air quality, or water quality effects. In order to qualify for this exemption, projects must comply with all of the following findings.

Please indicate the way in which the proposal meets the following required criteria.

1. The project is consistent with the applicable general plan designation and all applicable general plan policies as well as with applicable zoning designation and regulations:

Objective N3 of the Oakland General Plan Land Use and Transportation Element states: "Encourage the construction, conservation, and enhancement of housing resources in order to meet the current and future needs of the Oakland community". The proposal is to construct a new 75-unit affordable and commercial ground floor as a mixed-use residential development on a 26,778 sq. ft. parcel. The proposal meets the above objective of constructing housing.

Objective N3.2, Encouraging Infill Development: In order to facilitate the construction of needed housing units, infill development that is consistent with the General Plan should take place throughout the City of Oakland. The project is an infill development on an underutilized, vacant site located within proximity to transit bus lines and has adequate public infrastructure to serve the development.

The proposed new development will not detract from the character of the Community Commercial General Plan designation and meets the development standards and the required findings applicable for this project.

2. The proposed development occurs within city limits on a project site of no more than five acres substantially surrounded by urban uses:

The proposed development occurs within City limits on a project site of 26,778 square feet.

3. The project site has no value as habitat for endangered, rare or threatened species:

The project site is an infill parcel on a major commercial corridor and has no known value as habitat for endangered, rare or threatened species.

4. Approval of the project would not result in any significant effects relating to traffic, noise, air quality, or water quality:

The project involves construction of a mixed use project with 75 affordable units which is not anticipated to result in any significant effects relating to traffic, noise, air quality, or water quality for the following reasons:

The proposed project will include 5,415 sq. ft of open space area as a courtyard on second floor at the podium level. The courtyard is surrounded by the proposed building to the north, east and south, and include a play structure, dining and seating areas, Residents utilizing the podium courtyard would be shielded from traffic noise by the building itself, and future noise levels are calculated to be less than 65 DBA. Standard Conditions of Approval and Uniformly Applied Development Standards associated with construction noise and the City's Noise Ordinance will reduce noise impacts to less than significant levels.

Considering the projected less-than-significant traffic impacts associated with the building and the availability of nearby transit and the fact that the project population (affordable housing) is less likely to own vehicles, the impacts to traffic would be less than significant. Implementation of Standard Conditions of Approval involving dust control and construction missions would further reduce air quality impacts to less than significant levels. Implementation of the City's Standard Conditions of Approval, which include, but is not limited to, specific site design measures for post-construction stormwater pollution management, would reduce impacts to water quality to less than significant levels.

ATTACHMENT B: CONDITIONS OF APPROVAL

The proposal is hereby approved subject to the following Conditions of Approval:

1. <u>Approved Use</u>
The project shall be constructed and operated in accordance with the authorized use as described in the approved application materials, and the approved plans dated **December 3, 2020,** as amended by the following conditions of approval and mitigation measures, if applicable ("Conditions of Approval" or "Conditions").

2. <u>Effective Date, Expiration, Extensions and Extinguishment</u>
This Approval shall become effective immediately, unless the Approval is appealable, in which case the Approval shall become effective in ten calendar days unless an appeal is filed. Unless a different termination date is prescribed, this Approval shall expire **two years** from the Approval date, or from the date of the final decision in the event of an appeal, unless within such period all necessary permits for construction or alteration have been issued, or the authorized activities have commenced in the case of a permit not involving construction or alteration. Upon written request and payment of appropriate fees submitted no later than the expiration date of this Approval, the Director of City Planning or designee may grant a one-year extension of this date, with additional extensions subject to approval by the approving body. Expiration of any necessary building permit or other construction-related permit for this project may invalidate this Approval if said Approval has also expired. If litigation is filed challenging this Approval, or its implementation, then the time period stated above for obtaining necessary permits for construction or alteration and/or commencement of authorized activities is automatically extended for the duration of the litigation.

3. <u>Compliance with Other Requirements</u>
The project applicant shall comply with all other applicable federal, state, regional, and local laws/codes, requirements, regulations, and guidelines, including but not limited to those imposed by the City's Bureau of Building, Fire Marshal, and Public Works Department. Compliance with other applicable requirements may require changes to the approved use and/or plans. These changes shall be processed in accordance with the procedures contained in Condition #4.

4. <u>Minor and Major Changes</u>
Minor changes to the approved project, plans, Conditions, facilities, or use may be approved administratively by the Director of City Planning Major changes to the approved project, plans, Conditions, facilities, or use shall be reviewed by the Director of City Planning to determine whether such changes require submittal and approval of a revision to the Approval by the original approving body or a new independent permit/approval. Major revisions shall be reviewed in accordance with the procedures required for the original permit/approval. A new independent permit/approval shall be reviewed in accordance with the procedures required for the new permit/approval.

5. <u>Compliance with Conditions of Approval</u>

a. The project applicant and property owner, including successors, (collectively referred to hereafter as the "project applicant" or "applicant") shall be responsible for compliance with all the Conditions of Approval and any recommendations contained in any submitted and approved technical report at his/her sole cost and expense, subject to review and approval by the City of Oakland.
b. The City of Oakland reserves the right at any time during construction to require certification by a licensed professional at the project applicant's expense that the as-built project conforms to all applicable requirements, including but not limited to, approved maximum heights and minimum setbacks. Failure to construct the project in accordance with the Approval may result in remedial reconstruction, permit revocation, permit modification, stop work, permit suspension, or other corrective action.
c. Violation of any term, Condition, or project description relating to the Approval is unlawful, prohibited, and a violation of the Oakland Municipal Code. The City of Oakland reserves the right to initiate civil and/or criminal enforcement and/or abatement proceedings, or after notice and public hearing, to revoke the Approval or alter these Conditions if it is found that there is violation of any of the Conditions or the provisions of the Planning Code or Municipal Code, or the project operates as or causes a public nuisance. This provision is not intended to,

nor does it, limit in any manner whatsoever the ability of the City to take appropriate enforcement actions. The project applicant shall be responsible for paying fees in accordance with the City's Master Fee Schedule for inspections conducted by the City or a City-designated third-party to investigate alleged violations of the Approval or Conditions.

6. <u>Signed Copy of the Approval/Conditions</u>
A copy of the Approval letter and Conditions shall be signed by the project applicant, attached to each set of permit plans submitted to the appropriate City agency for the project, and made available for review at the project job site at all times.

7. <u>Blight/Nuisances</u>
The project site shall be kept in a blight/nuisance-free condition. Any existing blight or nuisance shall be abated within 60 days of approval, unless an earlier date is specified elsewhere.

8. <u>Indemnification</u>

a. To the maximum extent permitted by law, the project applicant shall defend (with counsel acceptable to the City), indemnify, and hold harmless the City of Oakland, the Oakland City Council, the Oakland Redevelopment Successor Agency, the Oakland City Planning Commission, and their respective agents, officers, employees, and volunteers (hereafter collectively called "City") from any liability, damages, claim, judgment, loss (direct or indirect), action, causes of action, or proceeding (including legal costs, attorneys' fees, expert witness or consultant fees, City Attorney or staff time, expenses or costs) (collectively called "Action") against the City to attack, set aside, void or annul this Approval or implementation of this Approval. The City may elect, in its sole discretion, to participate in the defense of said Action and the project applicant shall reimburse the City for its reasonable legal costs and attorneys' fees.
b. Within ten (10) calendar days of the filing of any Action as specified in subsection (a) above, the project applicant shall execute a Joint Defense Letter of Agreement with the City, acceptable to the Office of the City Attorney, which memorializes the above obligations. These obligations and the Joint Defense Letter of Agreement shall survive termination, extinguishment, or invalidation of the Approval. Failure to timely execute the Letter of Agreement does not relieve the project applicant of any of the obligations contained in this Condition or other requirements or Conditions of Approval that may be imposed by the City.

9. <u>Severability</u>
The Approval would not have been granted but for the applicability and validity of each and every one of the specified Conditions, and if one or more of such Conditions is found to be invalid by a court of competent jurisdiction this Approval would not have been granted without requiring other valid Conditions consistent with achieving the same purpose and intent of such Approval.

10. <u>Special Inspector/Inspections, Independent Technical Review, Project Coordination and Monitoring</u>
The project applicant may be required to cover the full costs of independent third-party technical review and City monitoring and inspection, including without limitation, special inspector(s)/inspection(s) during times of extensive or specialized plan-check review or construction, and inspections of potential violations of the Conditions of Approval. The project applicant shall establish a deposit with the Bureau of Building, if directed by the Building Official, Director of City Planning, or designee, prior to the issuance of a construction-related permit and on an ongoing as-needed basis.

11. <u>Public Improvements</u>
The project applicant shall obtain all necessary permits/approvals, such as encroachment permits, obstruction permits, curb/gutter/sidewalk permits, and public improvement ("p-job") permits from the City for work in the public right-of-way, including but not limited to, streets, curbs, gutters, sidewalks, utilities, and fire hydrants. Prior to any work in the public right-of-way, the applicant shall submit plans for review and approval by the Bureau of Planning, the Bureau

of Building, and other City departments as required. Public improvements shall be designed and installed to the satisfaction of the City.

12. <u>Compliance Matrix</u>
The project applicant shall submit a Compliance Matrix, in both written and electronic form, for review and approval by the Bureau of Planning and the Bureau of Building that lists each Condition of Approval (including each mitigation measure if applicable) in a sortable spreadsheet. The Compliance Matrix shall contain, at a minimum, each required Condition of Approval, when compliance with the Condition is required, and the status of compliance with each Condition. For multi-phased projects, the Compliance Matrix shall indicate which Condition applies to each phase. The project applicant shall submit the initial Compliance Matrix prior to the issuance of the first construction-related permit and shall submit an updated matrix upon request by the City.

13. <u>Construction Management Plan</u>
Prior to the issuance of the first construction-related permit, the project applicant and his/her general contractor shall submit a Construction Management Plan (CMP) for review and approval by the Bureau of Planning, Bureau of Building, and other relevant City departments such as the Fire Department, Department of Transportation, and the Public Works Department as directed. The CMP shall contain measures to minimize potential construction impacts including measures to comply with all construction-related Conditions of Approval (and mitigation measures if applicable) such as dust control, construction emissions, hazardous materials, construction days/hours, construction traffic control, waste reduction and recycling, stormwater pollution prevention, noise control, complaint management, and cultural resource management (see applicable Conditions below). The CMP shall provide project-specific information including descriptive procedures, approval documentation, and drawings (such as a site logistics plan, fire safety plan, construction phasing plan, proposed truck routes, traffic control plan, complaint management plan, construction worker parking plan, and litter/debris clean-up plan) that specify how potential construction impacts will be minimized and how each construction-related requirement will be satisfied throughout construction of the project.

14. <u>Trash and Blight Removal</u>
<u>Requirement:</u> The project applicant and his/her successors shall maintain the property free of blight, as defined in chapter 8.24 of the Oakland Municipal Code. For nonresidential and multifamily residential projects, the project applicant shall install and maintain trash receptacles near public entryways as needed to provide sufficient capacity for building users.
<u>When Required:</u> Ongoing
<u>Initial Approval:</u> N/A
<u>Monitoring/Inspection:</u> Bureau of Building

15. <u>Graffiti Control</u>
<u>Requirement</u>:

a. During construction and operation of the project, the project applicant shall incorporate best management practices reasonably related to the control of graffiti and/or the mitigation of the impacts of graffiti. Such best management practices may include, without limitation:
   i. Installation and maintenance of landscaping to discourage defacement of and/or protect likely graffiti-attracting surfaces.
   ii. Installation and maintenance of lighting to protect likely graffiti-attracting surfaces.
   iii. Use of paint with anti-graffiti coating.
   iv. Incorporation of architectural or design elements or features to discourage graffiti defacement in accordance with the principles of Crime Prevention Through Environmental Design (CPTED).
   v. Other practices approved by the City to deter, protect, or reduce the potential for graffiti defacement.
b. The project applicant shall remove graffiti by appropriate means within seventy-two (72) hours. Appropriate means include the following:

   i. Removal through scrubbing, washing, sanding, and/or scraping (or similar method) without damaging the surface and without discharging wash water or cleaning detergents into the City storm drain system.
   ii. Covering with new paint to match the color of the surrounding surface.
   iii. Replacing with new surfacing (with City permits if required).

<u>When Required</u>: Ongoing
<u>Initial Approval</u>: N/A
<u>Monitoring/Inspection</u>: Bureau of Building

16. <u>Landscape Plan</u>

a. ***Landscape Plan Required***
<u>Requirement</u>: The project applicant shall submit a final Landscape Plan for City review and approval that is consistent with the approved Landscape Plan. The Landscape Plan shall be included with the set of drawings submitted for the construction-related permit and shall comply with the landscape requirements of chapter 17.124 of the Planning Code.
<u>When Required</u>: Prior to approval of construction-related permit
<u>Initial Approval</u>: Bureau of Planning
<u>Monitoring/Inspection</u>: N/A

b. ***Landscape Installation***
<u>Requirement</u>: The project applicant shall implement the approved Landscape Plan unless a bond, cash deposit, letter of credit, or other equivalent instrument acceptable to the Director of City Planning, is provided. The financial instrument shall equal the greater of $2,500 or the estimated cost of implementing the Landscape Plan based on a licensed contractor's bid.
<u>When Required</u>: Prior to building permit final
<u>Initial Approval</u>: Bureau of Planning
<u>Monitoring/Inspection</u>: Bureau of Building

c. ***Landscape Maintenance***
<u>Requirement</u>: All required planting shall be permanently maintained in good growing condition and, whenever necessary, replaced with new plant materials to ensure continued compliance with applicable landscaping requirements. The property owner shall be responsible for maintaining planting in adjacent public rights-of-way. All required fences, walls, and irrigation systems shall be permanently maintained in good condition and, whenever necessary, repaired or replaced.
<u>When Required</u>: Ongoing
<u>Initial Approval</u>: N/A
<u>Monitoring/Inspection</u>: Bureau of Building

17. <u>Lighting</u>
<u>Requirement</u>: Proposed new exterior lighting fixtures shall be adequately shielded to a point below the light bulb and reflector to prevent unnecessary glare onto adjacent properties.
<u>When Required</u>: Prior to building permit final
<u>Initial Approval</u>: N/A
<u>Monitoring/Inspection</u>: Bureau of Building

18. <u>Dust Controls – Construction Related</u>
<u>Requirement:</u> The project applicant shall implement all of the following applicable dust control measures during construction of the project:

a) Water all exposed surfaces of active construction areas at least twice daily. Watering should be sufficient to prevent airborne dust from leaving the site. Increased watering frequency may be necessary whenever wind speeds exceed 15 miles per hour. Reclaimed water should be used whenever feasible.
b) Cover all trucks hauling soil, sand, and other loose materials or require all trucks to maintain at least two feet of freeboard (i.e., the minimum required space between the top of the load and the top of the trailer).
c) All visible mud or dirt track-out onto adjacent public roads shall be removed using wet power vacuum street sweepers at least once per day. The use of dry power sweeping is prohibited.
d) Limit vehicle speeds on unpaved roads to 15 miles per hour.
e) All demolition activities (if any) shall be suspended when average wind speeds exceed 20 mph.
f) All trucks and equipment, including tires, shall be washed off prior to leaving the site.
g) Site accesses to a distance of 100 feet from the paved road shall be treated with a 6 to 12 inch compacted layer of wood chips, mulch, or gravel.
<u>When Required:</u> During construction
<u>Initial Approval:</u> N/A
<u>Monitoring/Inspection:</u> Bureau of Building

19. <u>Criteria Air Pollutant Controls - Construction Related</u>
<u>Requirement:</u> The project applicant shall implement all of the following applicable basic control measures for criteria air pollutants during construction of the project as applicable:
a) Idling times on all diesel-fueled commercial vehicles over 10,000 lbs. shall be minimized either by shutting equipment off when not in use or reducing the maximum idling time to two minutes (as required by the California airborne toxics control measure Title 13, Section 2485, of the California Code of Regulations). Clear signage to this effect shall be provided for construction workers at all access points.
b) Idling times on all diesel-fueled off-road vehicles over 25 horsepower shall be minimized either by shutting equipment off when not in use or reducing the maximum idling time to two minutes and fleet operators must develop a written policy as required by Title 23, Section 2449, of the California Code of Regulations ("California Air Resources Board Off- Road Diesel Regulations").
c) All construction equipment shall be maintained and properly tuned in accordance with the manufacturer's specifications. All equipment shall be checked by a certified mechanic and determined to be running in proper condition prior to operation. Equipment check documentation should be kept at the construction site and be available for review by the City and the Bay Area Air Quality District as needed.
d) Portable equipment shall be powered by grid electricity if available. If electricity is not available, propane or natural gas generators shall be used if feasible. Diesel engines shall only be used if grid electricity is not available and propane or natural gas generators cannot meet the electrical demand.
e) Low VOC (i.e., ROG) coatings shall be used that comply with BAAQMD Regulation 8, Rule 3: Architectural Coatings.
f) All equipment to be used on the construction site shall comply with the requirements of Title 13, Section 2449, of the California Code of Regulations ("California Air Resources Board Off-Road Diesel Regulations") and upon request by the City (and the Air District if specifically requested), the project applicant shall provide written documentation that fleet requirements have been met.
<u>When Required:</u> During construction
<u>Initial Approval:</u> N/A
<u>Monitoring/Inspection:</u> Bureau of Building

20. <u>Stationary Sources of Air Pollution (Toxic Air Contaminants)</u>
<u>Requirement</u>: The project applicant shall incorporate appropriate measures into the project design in order to reduce the potential health risk due to on-site stationary sources of toxic air contaminants. The project applicant shall choose **<u>one</u>** of the following methods:

a. The project applicant shall retain a qualified air quality consultant to prepare a Health Risk Assessment (HRA) in accordance with California Air Resources Board (CARB) and Office of Environmental Health and Hazard Assessment requirements to determine the health risk associated with proposed stationary

sources of pollution in the project. The HRA shall be submitted to the City for review and approval. If the HRA concludes that the health risk is at or below acceptable levels, then health risk reduction measures are not required. If the HRA concludes the health risk exceeds acceptable levels, health risk reduction measures shall be identified to reduce the health risk to acceptable levels. Identified risk reduction measures shall be submitted to the City for review and approval and be included on the project drawings submitted for the construction-related permit or on other documentation submitted to the City. The approved risk reduction measures shall be implemented during construction and/or operations as applicable.

\- or -

b. The project applicant shall incorporate the following health risk reduction measures into the project. These features shall be submitted to the City for review and approval and be included on the project drawings submitted for the construction-related permit or on other documentation submitted to the City:
   i. Installation of non-diesel fueled generators, if feasible, or;
   ii. Installation of diesel generators with an EPA-certified Tier 4 engine or engines that are retrofitted with a CARB Level 3 Verified Diesel Emissions Control Strategy, if feasible.

<u>When Required</u>: Prior to approval of construction-related permit
<u>Initial Approval</u>: Bureau of Planning
<u>Monitoring/Inspection</u>: Bureau of Building

21. <u>Asbestos in Structures</u>
<u>Requirement</u>: The project applicant shall comply with all applicable laws and regulations regarding demolition and renovation of Asbestos Containing Materials (ACM), including but not limited to California Code of Regulations, Title 8; California Business and Professions Code, Division 3; California Health and Safety Code sections 25915-25919.7; and Bay Area Air Quality Management District, Regulation 11, Rule 2, as may be amended. Evidence of compliance shall be submitted to the City upon request.
<u>When Required</u>: Prior to approval of construction-related permit
<u>Initial Approval</u>: Applicable regulatory agency with jurisdiction
<u>Monitoring/Inspection</u>: Applicable regulatory agency with jurisdiction

22. <u>Tree Removal During Bird Breeding Season</u>
<u>Requirement</u>: To the extent feasible, removal of any tree and/or other vegetation suitable for nesting of birds shall not occur during the bird breeding season of February 1 to August 15 (or during December 15 to August 15 for trees located in or near marsh, wetland, or aquatic habitats). If tree removal must occur during the bird breeding season, all trees to be removed shall be surveyed by a qualified biologist to verify the presence or absence of nesting raptors or other birds. Pre-removal surveys shall be conducted within 15 days prior to the start of work and shall be submitted to the City for review and approval. If the survey indicates the potential presence of nesting raptors or other birds, the biologist shall determine an appropriately sized buffer around the nest in which no work will be allowed until the young have successfully fledged. The size of the nest buffer will be determined by the biologist in consultation with the California Department of Fish and Wildlife, and will be based to a large extent on the nesting species and its sensitivity to disturbance. In general, buffer sizes of 200 feet for raptors and 50 feet for other birds should suffice to prevent disturbance to birds nesting in the urban environment, but these buffers may be increased or decreased, as appropriate, depending on the bird species and the level of disturbance anticipated near the nest.
<u>When Required</u>: Prior to removal of trees
<u>Initial Approval</u>: Bureau of Building
<u>Monitoring/Inspection</u>: Bureau of Building

CITY OF OAKLAND CONDITIONS OF APPROVAL CONT'D PAGES 8 - 16 (1)
12" = 1'-0"

12/8/2022 6:22:03 PM

PYATOK
1611 TELEGRAPH AVE.
SUITE 200
OAKLAND, CA 94612
T. 510.465.7010 | F. 510.465.8575
www.pyatok.com

THE UNITY COUNCIL
1900 FRUITVALE AVE
#2A
OAKLAND, CA 94601

2700 INTERNATIONAL
OAKLAND, CA 94601

STAMP:
LICENSED ARCHITECT
PETER WALLER
C-23551
RENEWAL DATE
4/30/2023
STATE OF CALIFORNIA

ISSUE SCHEDULE

100 SD	5/11/22
50 DD	7/15/22
100 DD	9/16/22
50 CD	11/18/22
PERMIT SET	12/09/22

REVISION SCHEDULE

NO.	ISSUE	DATE

JOB NUMBER:	1937
DRAWN BY:	MA, DV, TN, MO, SP
CHECKED BY:	Checker
ISSUE DATE:	12/09/22
SCALE:	12" = 1'-0"

TITLE:
CONDITIONS OF APPROVAL

SHEET:
G0.41

PRELIMINARY - Not for Construction -

© 2019 PYATOK ARCHITECTURE & URBAN DESIGN

23. Tree Permit

a. ***Tree Permit Required***

Requirement: Pursuant to the City's Tree Protection Ordinance (OMC chapter 12.36), the project applicant shall obtain a tree permit and abide by the conditions of that permit.

When Required: Prior to approval of construction-related permit

Initial Approval: Bureau of Building

Monitoring/Inspection: Bureau of Building

b. ***Tree Protection During Construction***

Requirement: Adequate protection shall be provided during the construction period for any trees which are to remain standing, including the following, plus any recommendations of an arborist:

i. Before the start of any clearing, excavation, construction, or other work on the site, every protected tree deemed to be potentially endangered by said site work shall be securely fenced off at a distance from the base of the tree to be determined by the project's consulting arborist. Such fences shall remain in place for duration of all such work. All trees to be removed shall be clearly marked. A scheme shall be established for the removal and disposal of logs, brush, earth and other debris which will avoid injury to any protected tree.

ii. Where proposed development or other site work is to encroach upon the protected perimeter of any protected tree, special measures shall be incorporated to allow the roots to breathe and obtain water and nutrients. Any excavation, cutting, filing, or compaction of the existing ground surface within the protected perimeter shall be minimized. No change in existing ground level shall occur within a distance to be determined by the project's consulting arborist from the base of any protected tree at any time. No burning or use of equipment with an open flame shall occur near or within the protected perimeter of any protected tree.

iii. No storage or dumping of oil, gas, chemicals, or other substances that may be harmful to trees shall occur within the distance to be determined by the project's consulting arborist from the base of any protected trees, or any other location on the site from which such substances might enter the protected perimeter. No heavy construction equipment or construction materials shall be operated or stored within a distance from the base of any protected trees to be determined by the project's consulting arborist. Wires, ropes, or other devices shall not be attached to any protected tree, except as needed for support of the tree. No sign, other than a tag showing the botanical classification, shall be attached to any protected tree.

iv. Periodically during construction, the leaves of protected trees shall be thoroughly sprayed with water to prevent buildup of dust and other pollution that would inhibit leaf transpiration.

v. If any damage to a protected tree should occur during or as a result of work on the site, the project applicant shall immediately notify the Public Works Department and the project's consulting arborist shall make a recommendation to the City Tree Reviewer as to whether the damaged tree can be preserved. If, in the professional opinion of the Tree Reviewer, such tree cannot be preserved in a healthy state, the Tree Reviewer shall require replacement of any tree removed with another tree or trees on the same site deemed adequate by the Tree Reviewer to compensate for the loss of the tree that is removed.

vi. All debris created as a result of any tree removal work shall be removed by the project applicant from the property within two weeks of debris creation, and such debris shall be properly disposed of by the project applicant in accordance with all applicable laws, ordinances, and regulations.

When Required: During construction

Initial Approval: Public Works Department, Tree Division

Monitoring/Inspection: Bureau of Building

c. ***Tree Replacement Plantings***

Requirement: Replacement plantings shall be required for tree removals for the purposes of erosion control, groundwater replenishment, visual screening, wildlife habitat, and preventing excessive loss of shade, in accordance with the following criteria:

i. No tree replacement shall be required for the removal of nonnative species, for the removal of trees which is required for the benefit of remaining trees, or where insufficient planting area exists for a mature tree of the species being considered.

ii. Replacement tree species shall consist of Sequoia sempervirens (Coast Redwood), Quercus agrifolia (Coast Live Oak), Arbutus menziesii (Madrone), Aesculus californica (California Buckeye), Umbellularia californica (California Bay Laurel), or other tree species acceptable to the Tree Division.

iii. Replacement trees shall be at least twenty-four (24) inch box size, unless a smaller size is recommended by the arborist, except that three fifteen (15) gallon size trees may be substituted for each twenty-four (24) inch box size tree where appropriate.

iv. Minimum planting areas must be available on site as follows:

- For Sequoia sempervirens, three hundred fifteen (315) square feet per tree;
- For other species listed, seven hundred (700) square feet per tree.

v. In the event that replacement trees are required but cannot be planted due to site constraints, an in lieu fee in accordance with the City's Master Fee Schedule may be substituted for required replacement plantings, with all such revenues applied toward tree planting in city parks, streets and medians.

vi. The project applicant shall install the plantings and maintain the plantings until established. The Tree Reviewer of the Tree Division of the Public Works Department may require a landscape plan showing the replacement plantings and the method of irrigation. Any replacement plantings which fail to become established within one year of planting shall be replanted at the project applicant's expense.

When Required: Prior to building permit final

Initial Approval: Public Works Department, Tree Division

Monitoring/Inspection: Bureau of Building

24. Archaeological and Paleontological Resources – Discovery During Construction

Requirement: Pursuant to CEQA Guidelines section 15064.5(f), in the event that any historic or prehistoric subsurface cultural resources are discovered during ground disturbing activities, all work within 50 feet of the resources shall be halted and the project applicant shall notify the City and consult with a qualified archaeologist or paleontologist, as applicable, to assess the significance of the find. In the case of discovery of paleontological resources, the assessment shall be done in accordance with the Society of Vertebrate Paleontology standards. If any find is determined to be significant, appropriate avoidance measures recommended by the consultant and approved by the City must be followed unless avoidance is determined unnecessary or infeasible by the City. Feasibility of avoidance shall be determined with consideration of factors such as the nature of the find, project design, costs, and other considerations. If avoidance is unnecessary or infeasible, other appropriate measures (e.g., data recovery, excavation) shall be instituted. Work may proceed on other parts of the project site while measures for the cultural resources are implemented.

In the event of data recovery of archaeological resources, the project applicant shall submit an Archaeological Research Design and Treatment Plan (ARDTP) prepared by a qualified archaeologist for review and approval by the City. The ARDTP is required to identify how the proposed data recovery program would preserve the significant information the archaeological resource is expected to contain. The ARDTP shall identify the scientific/historic research questions applicable to the expected resource, the data classes the resource is expected to possess, and how the expected data classes would address the applicable research questions. The ARDTP shall include the analysis and specify the curation and storage methods. Data recovery, in general, shall be limited to the portions of the archaeological resource that could be impacted by the proposed project. Destructive data recovery methods shall not be applied to portions of the archaeological resources if nondestructive methods are practicable. Because the intent of the ARDTP is to save as much of the archaeological resource as possible, including moving the resource, if feasible, preparation and implementation of the ARDTP would reduce the potential adverse impact to less than significant. The project applicant shall implement the ARDTP at his/her expense.

In the event of excavation of paleontological resources, the project applicant shall submit an excavation plan prepared by a qualified paleontologist to the City for review and approval. All significant cultural materials recovered shall be

subject to scientific analysis, professional museum curation, and/or a report prepared by a qualified paleontologist, as appropriate, according to current professional standards and at the expense of the project applicant.

When Required: During construction

Initial Approval: N/A

Monitoring/Inspection: Bureau of Building

25. Human Remains – Discovery During Construction

Requirement: Pursuant to CEQA Guidelines section 15064.5(e)(1), in the event that human skeletal remains are uncovered at the project site during construction activities, all work shall immediately halt, and the project applicant shall notify the City and the Alameda County Coroner. If the County Coroner determines that an investigation of the cause of death is required or that the remains are Native American, all work shall cease within 50 feet of the remains until appropriate arrangements are made. In the event that the remains are Native American, the City shall contact the California Native American Heritage Commission (NAHC), pursuant to subdivision (c) of section 7050.5 of the California Health and Safety Code. If the agencies determine that avoidance is not feasible, then an alternative plan shall be prepared with specific steps and timeframe required to resume construction activities. Monitoring, data recovery, determination of significance, and avoidance measures (if applicable) shall be completed expeditiously and at the expense of the project applicant.

When Required: During construction

Initial Approval: N/A

Monitoring/Inspection: Bureau of Building

26. Construction-Related Permit(s)

Requirement: The project applicant shall obtain all required construction-related permits/approvals from the City. The project shall comply with all standards, requirements and conditions contained in construction-related codes, including but not limited to the Oakland Building Code and the Oakland Grading Regulations, to ensure structural integrity and safe construction.

When Required: Prior to approval of construction-related permit

Initial Approval: Bureau of Building

Monitoring/Inspection: Bureau of Building

27. Seismic Hazards Zone (Landslide/Liquefaction)

Requirement: The project applicant shall submit a site-specific geotechnical report, consistent with California Geological Survey Special Publication 117 (as amended), prepared by a registered geotechnical engineer for City review and approval containing at a minimum a description of the geological and geotechnical conditions at the site, an evaluation of site-specific seismic hazards based on geological and geotechnical conditions, and recommended measures to reduce potential impacts related to liquefaction and/or slope stability hazards. The project applicant shall implement the recommendations contained in the approved report during project design and construction.

When Required: Prior to approval of construction-related permit

Initial Approval: Bureau of Building

Monitoring/Inspection: Bureau of Building

28. Hazardous Materials Related to Construction

Requirement: The project applicant shall ensure that Best Management Practices (BMPs) are implemented by the contractor during construction to minimize potential negative effects on groundwater, soils, and human health. These shall include, at a minimum, the following:

a. Follow manufacture's recommendations for use, storage, and disposal of chemical products used in construction;

b. Avoid overtopping construction equipment fuel gas tanks;

c. During routine maintenance of construction equipment, properly contain and remove grease and oils;

d. Properly dispose of discarded containers of fuels and other chemicals;

e. Implement lead-safe work practices and comply with all local, regional, state, and federal requirements concerning lead (for more information refer to the Alameda County Lead Poisoning Prevention Program); and

f. If soil, groundwater, or other environmental medium with suspected contamination is encountered unexpectedly during construction activities (e.g., identified by odor or visual staining, or if any underground storage tanks, abandoned drums or other hazardous materials or wastes are encountered), the project applicant shall cease work in the vicinity of the suspect material, the area shall be secured as necessary, and the applicant shall take all appropriate measures to protect human health and the environment. Appropriate measures shall include notifying the City and applicable regulatory agency(ies) and implementation of the actions described in the City's Standard Conditions of Approval, as necessary, to identify the nature and extent of contamination. Work shall not resume in the area(s) affected until the measures have been implemented under the oversight of the City or regulatory agency, as appropriate.

When Required: During construction

Initial Approval: N/A

Monitoring/Inspection: Bureau of Building

29. Erosion and Sedimentation Control Measures for Construction

Requirement: The project applicant shall implement Best Management Practices (BMPs) to reduce erosion, sedimentation, and water quality impacts during construction to the maximum extent practicable. At a minimum, the project applicant shall provide filter materials deemed acceptable to the City at nearby catch basins to prevent any debris and dirt from flowing into the City's storm drain system and creeks.

When Required: During construction

Initial Approval: N/A

Monitoring/Inspection: Bureau of Building

30. Hazardous Building Materials and Site Contamination

a. Hazardous Building Materials Assessment

Requirement: The project applicant shall submit a comprehensive assessment report to the Bureau of Building, signed by a qualified environmental professional, documenting the presence or lack thereof of asbestos-containing materials (ACMs), lead-based paint, polychlorinated biphenyls (PCBs), and any other building materials or stored materials classified as hazardous materials by State or federal law. If lead-based paint, ACMs, PCBs, or any other building materials or stored materials classified as hazardous materials are present, the project applicant shall submit specifications prepared and signed by a qualified environmental professional, for the stabilization and/or removal of the identified hazardous materials in accordance with all applicable laws and regulations. The project applicant shall implement the approved recommendations and submit to the City evidence of approval for any proposed remedial action and required clearances by the applicable local, state, or federal regulatory agency.

When Required: Prior to approval of demolition, grading, or building permits

Initial Approval: Bureau of Building

Monitoring/Inspection: Bureau of Building

b. Environmental Site Assessment Required

Requirement: The project applicant shall submit a Phase I Environmental Site Assessment report, and Phase II Environmental Site Assessment report if warranted by the Phase I report, for the project site for review and approval by the City. The report(s) shall be prepared by a qualified environmental assessment professional and include recommendations for remedial action, as appropriate, for hazardous materials. The project applicant shall implement the approved recommendations and submit to the City evidence of approval for any proposed remedial action and required clearances by the applicable local, state, or federal regulatory agency.

When Required: Prior to approval of construction-related permit.

Initial Approval: Applicable regulatory agency with jurisdiction

Monitoring/Inspection: Applicable regulatory agency with jurisdiction

c. Health and Safety Plan Required

Requirement: The project applicant shall submit a Health and Safety Plan for the review and approval by the City in order to protect project construction workers from risks associated with hazardous materials. The project applicant shall implement the approved Plan.

When Required: Prior to approval of construction-related permit

Initial Approval: Bureau of Building

Monitoring/Inspection: Bureau of Building

d. Best Management Practices (BMPs) Required for Contaminated Sites

Requirement: The project applicant shall ensure that Best Management Practices (BMPs) are implemented by the contractor during construction to minimize potential soil and groundwater hazards. These shall include the following:

i. Soil generated by construction activities shall be stockpiled on-site in a secure and safe manner. All contaminated soils determined to be hazardous or non-hazardous waste must be adequately profiled (sampled) prior to acceptable reuse or disposal at an appropriate off-site facility. Specific sampling and handling and transport procedures for reuse or disposal shall be in accordance with applicable local, state, and federal requirements.

ii. Groundwater pumped from the subsurface shall be contained on-site in a secure and safe manner, prior to treatment and disposal, to ensure environmental and health issues are resolved pursuant to applicable laws and policies. Engineering controls shall be utilized, which include impermeable barriers to prohibit groundwater and vapor intrusion into the building.

When Required: During construction

Initial Approval: N/A

Monitoring/Inspection: Bureau of Building

31. Erosion and Sedimentation Control Measures for Construction

Requirement: The project applicant shall implement Best Management Practices (BMPs) to reduce erosion, sedimentation, and water quality impacts during construction to the maximum extent practicable. At a minimum, the project applicant shall provide filter materials deemed acceptable to the City at nearby catch basins to prevent any debris and dirt from flowing into the City's storm drain system and creeks.

When Required: During construction

Initial Approval: N/A

Monitoring/Inspection: Bureau of Building

32. NPDES C.3 Stormwater Requirements for Regulated Projects

a. Post-Construction Stormwater Management Plan Required

Requirement: The project applicant shall comply with the requirements of Provision C.3 of the Municipal Regional Stormwater Permit issued under the National Pollutant Discharge Elimination System (NPDES). The project applicant shall submit a Post-Construction Stormwater Management Plan to the City for review and approval with the project drawings submitted for site improvements, and shall implement the approved Plan during construction. The Post-Construction Stormwater Management Plan shall include and identify the following:

i. Location and size of new and replaced impervious surface;

ii. Directional surface flow of stormwater runoff;

iii. Location of proposed on-site storm drain lines;

iv. Site design measures to reduce the amount of impervious surface area;

v. Source control measures to limit stormwater pollution;

vi. Stormwater treatment measures to remove pollutants from stormwater runoff, including the method used to hydraulically size the treatment measures; and

vii. Hydromodification management measures, if required by Provision C.3, so that post-project stormwater runoff flow and duration match pre-project runoff.

When Required: Prior to approval of construction-related permit

Initial Approval: Bureau of Planning; Bureau of Building

Monitoring/Inspection: Bureau of Building

b. Maintenance Agreement Required

Requirement: The project applicant shall enter into a maintenance agreement with the City, based on the Standard City of Oakland Stormwater Treatment Measures Maintenance Agreement, in accordance with Provision C.3, which provides, in part, for the following:

i. The project applicant accepting responsibility for the adequate installation/construction, operation, maintenance, inspection, and reporting of any on-site stormwater treatment measures being incorporated into the project until the responsibility is legally transferred to another entity; and

ii. Legal access to the on-site stormwater treatment measures for representatives of the City, the local vector control district, and staff of the Regional Water Quality Control Board, San Francisco Region, for the purpose of verifying the implementation, operation, and maintenance of the on-site stormwater treatment measures and to take corrective action if necessary.

The maintenance agreement shall be recorded at the County Recorder's Office at the applicant's expense.

When Required: Prior to building permit final

Initial Approval: Bureau of Building

Monitoring/Inspection: Bureau of Building

33. Construction Days/Hours

Requirement: The project applicant shall comply with the following restrictions concerning construction days and hours:

a. Construction activities are limited to between 7:00 a.m. and 7:00 p.m. Monday through Friday, except that pier drilling and/or other extreme noise generating activities greater than 90 dBA shall be limited to between 8:00 a.m. and 4:00 p.m.

b. Construction activities are limited to between 9:00 a.m. and 5:00 p.m. on Saturday. In residential zones and within 300 feet of a residential zone, construction activities are allowed from 9:00 a.m. to 5:00 p.m. only within the interior of the building with the doors and windows closed. No pier drilling or other extreme noise generating activities greater than 90 dBA are allowed on Saturday.

c. No construction is allowed on Sunday or federal holidays.

Construction activities include, but are not limited to, truck idling, moving equipment (including trucks, elevators, etc.) or materials, deliveries, and construction meetings held on-site in a non-enclosed area.

Any construction activity proposed outside of the above days and hours for special activities (such as concrete pouring which may require more continuous amounts of time) shall be evaluated on a case-by-case basis by the City, with criteria including the urgency/emergency nature of the work, the proximity of residential or other sensitive uses, and a consideration of nearby residents'/occupants' preferences. The project applicant shall notify property owners and occupants located within 300 feet at least 14 calendar days prior to construction activity proposed outside of the above days/hours. When submitting a request to the City to allow construction activity outside of the above days/hours, the project applicant shall submit information concerning the type and duration of proposed construction activity and the draft public notice for City review and approval prior to distribution of the public notice.

When Required: During construction

Initial Approval: N/A

Monitoring/Inspection: Bureau of Building

34. Construction Noise

Requirement: The project applicant shall implement noise reduction measures to reduce noise impacts due to construction. Noise reduction measures include, but are not limited to, the following:

a. Equipment and trucks used for project construction shall utilize the best available noise control techniques (e.g., improved mufflers, equipment redesign, use of intake silencers, ducts, engine enclosures and acoustically-attenuating shields or shrouds) wherever feasible.

b. Except as provided herein, impact tools (e.g., jack hammers, pavement breakers, and rock drills) used for project construction shall be hydraulically or electrically powered to avoid noise associated with compressed air exhaust from pneumatically powered tools. However, where use of pneumatic tools is unavoidable, an exhaust muffler on the compressed air exhaust shall be used; this muffler can lower noise levels from the exhaust by up to about 10 dBA. External jackets on the tools themselves shall be used, if such jackets are commercially available, and this could achieve a reduction of 5 dBA. Quieter procedures shall be used, such as drills rather than impact equipment, whenever such procedures are available and consistent with construction procedures.

c. Applicant shall use temporary power poles instead of generators where feasible.

d. Stationary noise sources shall be located as far from adjacent properties as possible, and they shall be muffled and enclosed within temporary sheds, incorporate insulation barriers, or use other measures as determined by the City to provide equivalent noise reduction.

e. The noisiest phases of construction shall be limited to less than 10 days at a time. Exceptions may be allowed if the City determines an extension is necessary and all available noise reduction controls are implemented.

When Required: During construction

Initial Approval: N/A

Monitoring/Inspection: Bureau of Building

35. Extreme Construction Noise

a. ***Construction Noise Management Plan Required***

Requirement: Prior to any extreme noise generating construction activities (e.g., pier drilling, pile driving and other activities generating greater than 90dBA), the project applicant shall submit a Construction Noise Management Plan prepared by a qualified acoustical consultant for City review and approval that contains a set of site-specific noise attenuation measures to further reduce construction impacts associated with extreme noise generating activities. The project applicant shall implement the approved Plan during construction. Potential attenuation measures include, but are not limited to, the following:

i. Erect temporary plywood noise barriers around the construction site, particularly along on sites adjacent to residential buildings;

ii. Implement "quiet" pile driving technology (such as pre-drilling of piles, the use of more than one pile driver to shorten the total pile driving duration), where feasible, in consideration of geotechnical and structural requirements and conditions;

iii. Utilize noise control blankets on the building structure as the building is erected to reduce noise emission from the site;

iv. Evaluate the feasibility of noise control at the receivers by temporarily improving the noise reduction capability of adjacent buildings by the use of sound blankets for example and implement such measure if such measures are feasible and would noticeably reduce noise impacts; and

v. Monitor the effectiveness of noise attenuation measures by taking noise measurements.

When Required: Prior to approval of construction-related permit

Initial Approval: Bureau of Building

Monitoring/Inspection: Bureau of Building

b. ***Public Notification Required***

Requirement: The project applicant shall notify property owners and occupants located within 300 feet of the construction activities at least 14 calendar days prior to commencing extreme noise generating activities. Prior to

providing the notice, the project applicant shall submit to the City for review and approval the proposed type and duration of extreme noise generating activities and the proposed public notice. The public notice shall provide the estimated start and end dates of the extreme noise generating activities and describe noise attenuation measures to be implemented.

When Required: During construction

Initial Approval: Bureau of Building

Monitoring/Inspection: Bureau of Building

36. Project-Specific Construction Noise Reduction Measures

Requirement: The project applicant shall submit a Construction Noise Management Plan prepared by a qualified acoustical consultant for City review and approval that contains a set of site-specific noise attenuation measures to further reduce construction noise impacts on single-family homes to the rear. The project applicant shall implement the approved Plan during construction.

When Required: Prior to approval of construction-related permit

Initial Approval: Bureau of Building

Monitoring/Inspection: Bureau of Building

37. Construction Noise Complaints

Requirement: The project applicant shall submit to the City for review and approval a set of procedures for responding to and tracking complaints received pertaining to construction noise, and shall implement the procedures during construction. At a minimum, the procedures shall include:

a. Designation of an on-site construction complaint and enforcement manager for the project;

b. A large on-site sign near the public right-of-way containing permitted construction days/hours, complaint procedures, and phone numbers for the project complaint manager and City Code Enforcement unit;

c. Protocols for receiving, responding to, and tracking received complaints; and

d. Maintenance of a complaint log that records received complaints and how complaints were addressed, which shall be submitted to the City for review upon the City's request.

When Required: Prior to approval of construction-related permit

Initial Approval: Bureau of Building

Monitoring/Inspection: Bureau of Building

38. Operational Noise

Requirement: Noise levels from the project site after completion of the project (i.e., during project operation) shall comply with the performance standards of chapter 17.120 of the Oakland Planning Code and chapter 8.18 of the Oakland Municipal Code. If noise levels exceed these standards, the activity causing the noise shall be abated until appropriate noise reduction measures have been installed and compliance verified by the City.

When Required: Ongoing

Initial Approval: N/A

Monitoring/Inspection: Bureau of Building

39. Capital Improvements Impact Fee

Requirement: The project applicant shall comply with the requirements of the City of Oakland Capital Improvements Fee Ordinance (chapter 15.74 of the Oakland Municipal Code).

When Required: Prior to issuance of building permit

Initial Approval: Bureau of Building

Monitoring/Inspection: N/A

CITY OF OAKLAND CONDITIONS OF APPROVAL CONT'D PAGES 17 - 24

12" = 1'-0" (1)

12/8/2022 6:22:05 PM

PYATOK
1611 TELEGRAPH AVE.
SUITE 200
OAKLAND, CA 94612
T. 510.465.7010 | F. 510.465.8575
www.pyatok.com

THE UNITY COUNCIL
1900 FRUITVALE AVE
#2A
OAKLAND, CA 94601

2700 INTERNATIONAL

OAKLAND, CA 94601

STAMP:

LICENSED ARCHITECT
PETER WALLER
C-35561
4/30/2023
STATE OF CALIFORNIA

ISSUE SCHEDULE

100 SD	5/11/22
50 DD	7/15/22
100 DD	9/16/22
50 CD	11/18/22
PERMIT SET	12/09/22

REVISION SCHEDULE

NO.	ISSUE	DATE

JOB NUMBER:	1937
DRAWN BY:	MA, DV, TN, MO, SP
CHECKED BY:	Checker
ISSUE DATE:	12/09/22
SCALE:	12" = 1'-0"

TITLE:

CONDITIONS OF APPROVAL

SHEET:

G0.42

PRELIMINARY - Not for Construction -

© 2019 PYATOK ARCHITECTURE & URBAN DESIGN

40. Construction Activity in the Public Right-of-Way

a. ***Obstruction Permit Required***

Requirement: The project applicant shall obtain an obstruction permit from the City prior to placing any temporary construction-related obstruction in the public right-of-way, including City streets and sidewalks.

When Required: Prior to approval of construction-related permit

Initial Approval: Bureau of Building

Monitoring/Inspection: Bureau of Building

b. ***Traffic Control Plan Required***

Requirement: In the event of obstructions to vehicle or bicycle travel lanes, the project applicant shall submit a Traffic Control Plan to the City for review and approval prior to obtaining an obstruction permit. The project applicant shall submit evidence of City approval of the Traffic Control Plan with the application for an obstruction permit. The Traffic Control Plan shall contain a set of comprehensive traffic control measures for auto, transit, bicycle, and pedestrian detours, including detour signs if required, lane closure procedures, signs, cones for drivers, and designated construction access routes. The project applicant shall implement the approved Plan during construction.

When Required: Prior to approval of construction-related permit

Initial Approval Public Works Department, Transportation Services Division

Monitoring/Inspection: Bureau of Building

c. ***Repair of City Streets***

Requirement: The project applicant shall repair any damage to the public right-of way, including streets and sidewalks caused by project construction at his/her expense within one week of the occurrence of the damage (or excessive wear), unless further damage/excessive wear may continue; in such case, repair shall occur prior to approval of the final inspection of the construction-related permit. All damage that is a threat to public health or safety shall be repaired immediately.

When Required: Prior to building permit final

Initial Approval: N/A

Monitoring/Inspection: Bureau of Building

41. Bicycle Parking

Requirement: The project applicant shall comply with the City of Oakland Bicycle Parking Requirements (chapter 17.118 of the Oakland Planning Code). The project drawings submitted for construction-related permits shall demonstrate compliance with the requirements.

When Required: Prior to approval of construction-related permit

Initial Approval: Bureau of Planning

Monitoring/Inspection: Bureau of Building

42. Transportation Impact Fee

Requirement: The project applicant shall comply with the requirements of the City of Oakland Transportation Impact Fee Ordinance (chapter 15.74 of the Oakland Municipal Code).

When Required: Prior to issuance of building permit

Initial Approval: Bureau of Building

Monitoring/Inspection: N/A

43. Plug-In Electric Vehicle (PEV) Charging Infrastructure

a. PEV-Ready Parking Spaces

Requirement: The applicant shall submit, for review and approval of the Building Official and the Zoning Manager, plans that show the location of parking spaces equipped with full electrical circuits designated for future PEV charging (i.e. "PEV-Ready) per the requirements of Chapter 15.04 of the Oakland Municipal Code. Building electrical plans shall indicate sufficient electrical capacity to supply the required PEV-Ready parking spaces.

When Required: Prior to Issuance of Building Permit

Initial Approval: Bureau of Building

Monitoring/Inspection: Bureau of Building

b. PEV-Capable Parking Spaces

Requirement: The applicant shall submit, for review and approval of the Building Official, plans that show the location of inaccessible conduit to supply PEV-capable parking spaces per the requirements of Chapter 15.04 of the Oakland Municipal Code. Building electrical plans shall indicate sufficient electrical capacity to supply the required PEV-capable parking spaces.

When Required: Prior to Issuance of Building Permit

Initial Approval: Bureau of Building

Monitoring/Inspection: Bureau of Building

c. ADA-Accessible Spaces

Requirement: The applicant shall submit, for review and approval of the Building Official, plans that show the location of future accessible EV parking spaces as required under Title 24 Chapter 11B Table 11B-228.3.2.1, and specify plans to construct all future accessible EV parking spaces with appropriate grade, vertical clearance, and accessible path of travel to allow installation of accessible EV charging station(s).

When Required: Prior to Issuance of Building Permit

Initial Approval: Bureau of Building

Monitoring/Inspection: Bureau of Building

44. Construction and Demolition Waste Reduction and Recycling

Requirement: The project applicant shall comply with the City of Oakland Construction and Demolition Waste Reduction and Recycling Ordinance (chapter 15.34 of the Oakland Municipal Code) by submitting a Construction and Demolition Waste Reduction and Recycling Plan (WRRP) for City review and approval, and shall implement the approved WRRP. Projects subject to these requirements include all new construction, renovations/alterations/modifications with construction values of $50,000 or more (except R-3 type construction), and all demolition (including soft demolition) except demolition of type R-3 construction. The WRRP must specify the methods by which the project will divert construction and demolition debris waste from landfill disposal in accordance with current City requirements. The WRRP may be submitted electronically at www.greenhalosystems.com or manually at the City's Green Building Resource Center. Current standards, FAQs, and forms are available on the City's website and in the Green Building Resource Center.

When Required: Prior to approval of construction-related permit

Initial Approval: Public Works Department, Environmental Services Division

Monitoring/Inspection: Public Works Department, Environmental Services Division

45. Underground Utilities

Requirement: The project applicant shall place underground all new utilities serving the project and under the control of the project applicant and the City, including all new gas, electric, cable, and telephone facilities, fire alarm conduits, street light wiring, and other wiring, conduits, and similar facilities. The new facilities shall be placed underground along the project's street frontage and from the project structures to the point of service. Utilities under the control of other agencies, such as PG&E, shall be placed underground if feasible. All utilities shall be installed in accordance with standard specifications of the serving utilities.

When Required: During construction

Initial Approval: N/A

Monitoring/Inspection: Bureau of Building

46. Recycling Collection and Storage Space

Requirement: The project applicant shall comply with the City of Oakland Recycling Space Allocation Ordinance (chapter 17.118 of the Oakland Planning Code). The project drawings submitted for construction-related permits shall contain recycling collection and storage areas in compliance with the Ordinance. For residential projects, at least two cubic feet of storage and collection space per residential unit is required, with a minimum of ten cubic feet. For nonresidential projects, at least two cubic feet of storage and collection space per 1,000 square feet of building floor area is required, with a minimum of ten cubic feet.

When Required: Prior to approval of construction-related permit

Initial Approval: Bureau of Planning

Monitoring/Inspection: Bureau of Building

47. Green Building Requirements

a. ***Compliance with Green Building Requirements During Plan-Check***

Requirement: The project applicant shall comply with the requirements of the California Green Building Standards (CALGreen) mandatory measures and the applicable requirements of the City of Oakland Green Building Ordinance (chapter 18.02 of the Oakland Municipal Code).

i. The following information shall be submitted to the City for review and approval with the application for a building permit:
- Documentation showing compliance with Title 24 of the current version of the California Building Energy Efficiency Standards.
- Completed copy of the final green building checklist approved during the review of the Planning and Zoning permit.
- Copy of the Unreasonable Hardship Exemption, if granted, during the review of the Planning and Zoning permit.
- Permit plans that show, in general notes, detailed design drawings, and specifications as necessary, compliance with the items listed in subsection (ii) below.
- Copy of the signed statement by the Green Building Certifier approved during the review of the Planning and Zoning permit that the project complied with the requirements of the Green Building Ordinance.
- Signed statement by the Green Building Certifier that the project still complies with the requirements of the Green Building Ordinance, unless an Unreasonable Hardship Exemption was granted during the review of the Planning and Zoning permit.
- Other documentation as deemed necessary by the City to demonstrate compliance with the Green Building Ordinance.

ii. The set of plans in subsection (i) shall demonstrate compliance with the following:
- CALGreen mandatory measures.
- All pre-requisites per the green building checklist approved during the review of the Planning and Zoning permit, or, if applicable, all the green building measures approved as part of the Unreasonable Hardship Exemption granted during the review of the Planning and Zoning permit.
- per the appropriate checklist approved during the Planning entitlement process.
- All green building points identified on the checklist approved during review of the Planning and Zoning permit, unless a Request for Revision Plan-check application is submitted and approved by the Bureau of Planning that shows the previously approved points that will be eliminated or substituted.
- The required green building point minimums in the appropriate credit categories.

When Required: Prior to approval of construction-related permit

Initial Approval: Bureau of Building

Monitoring/Inspection: N/A

b. ***Compliance with Green Building Requirements During Construction***

Requirement: The project applicant shall comply with the applicable requirements of CALGreen and the Oakland Green Building Ordinance during construction of the project.

The following information shall be submitted to the City for review and approval:

i. Completed copies of the green building checklists approved during the review of the Planning and Zoning permit and during the review of the building permit.

ii. Signed statement(s) by the Green Building Certifier during all relevant phases of construction that the project complies with the requirements of the Green Building Ordinance.

iii. Other documentation as deemed necessary by the City to demonstrate compliance with the Green Building Ordinance.

When Required: During construction

Initial Approval: N/A

Monitoring/Inspection: Bureau of Building

c. ***Compliance with Green Building Requirements After Construction***

Requirement: Within sixty (60) days of the final inspection of the building permit for the project, the Green Building Certifier shall submit the appropriate documentation to Green Building Certification Institute and attain the minimum required certification/point level. Within one year of the final inspection of the building permit for the project, the applicant shall submit to the Bureau of Planning the Certificate from the organization listed above demonstrating certification and compliance with the minimum point/certification level noted above.

When Required: After project completion as specified

Initial Approval: Bureau of Planning

Monitoring/Inspection: Bureau of Building

d. ***Compliance with Green Building Requirements During Construction***

Requirement: The project applicant shall comply with the applicable requirements of CALGreen and the Green Building Ordinance during construction.

The following information shall be submitted to the City for review and approval:

i. Completed copy of the green building checklists approved during review of the Planning and Zoning permit and during the review of the Building permit.

ii. Other documentation as deemed necessary by the City to demonstrate compliance with the Green Building Ordinance.

When Required: During construction

Initial Approval: N/A

Monitoring/Inspection: Bureau of Building

48. Sanitary Sewer System

Requirement: The project applicant shall prepare and submit a Sanitary Sewer Impact Analysis to the City for review and approval in accordance with the City of Oakland Sanitary Sewer Design Guidelines. The Impact Analysis shall include an estimate of pre-project and post-project wastewater flow from the project site. In the event that the Impact Analysis indicates that the net increase in project wastewater flow exceeds City-projected increases in wastewater flow in the sanitary sewer system, the project applicant shall pay the Sanitary Sewer Impact Fee in accordance with the City's Master Fee Schedule for funding improvements to the sanitary sewer system.
When Required: Prior to approval of construction-related permit
Initial Approval: Public Works Department, Department of Engineering and Construction
Monitoring/Inspection: N/A

49. Storm Drain System

Requirement: The project storm drainage system shall be designed in accordance with the City of Oakland's Storm Drainage Design Guidelines. To the maximum extent practicable, peak stormwater runoff from the project site shall be reduced by at least 25 percent compared to the pre-project condition.
When Required: Prior to approval of construction-related permit
Initial Approval: Bureau of Building
Monitoring/Inspection: Bureau of Building

50. Water Efficient Landscape Ordinance (WELO)

Requirement: The project applicant shall comply with California's Water Efficient Landscape Ordinance (WELO) in order to reduce landscape water usage. For any landscape project with an aggregate (total noncontiguous) landscape area equal to 2,500 sq. ft. or less. The project applicant may implement either the Prescriptive Measures or the Performance Measures, of, and in accordance with the California's Model Water Efficient Landscape Ordinance. For any landscape project with an aggregate (total noncontiguous) landscape area over 2,500 sq. ft., the project applicant shall implement the Performance Measures in accordance with the WELO.
Prescriptive Measures: Prior to construction, the project applicant shall submit documentation showing compliance with Appendix D of California's Model Water Efficient Landscape Ordinance (see website below starting on page 23):
http://www.water.ca.gov/wateruseefficiency/landscapeordinance/docs/Title%2023%20extract%2
0-%20Official%20CCR%20pages.pdf
Performance Measures: Prior to construction, the project applicant shall prepare and submit a Landscape Documentation Package for review and approval, which includes the following
a. Project Information:
i. Date,
ii. Applicant and property owner name,
iii. Project address,
iv. Total landscape area,
v. Project type (new, rehabilitated, cemetery, or home owner installed),
vi. Water supply type and water purveyor,
vii. Checklist of documents in the package, and
viii. Applicant signature and date with the statement: "I agree to comply with the requirements of the water efficient landscape ordinance and submit a complete Landscape Documentation Package."
b. Water Efficient Landscape Worksheet
i. Hydrozone Information Table
ii. Water Budget Calculations with Maximum Applied Water Allowance (MAWA) and Estimated Total Water Use
c. Soil Management Report
d. Landscape Design Plan
e. Irrigation Design Plan, and
f. Grading Plan
Upon installation of the landscaping and irrigation systems, the Project applicant shall submit a Certificate of Completion and landscape and irrigation maintenance schedule for review and approval by the City. The Certificate of Compliance shall also be submitted to the local water purveyor and property owner or his or her designee. For the specific requirements within the Water Efficient Landscape Worksheet, Soil Management Report, Landscape Design Plan, Irrigation Design Plan and Grading Plan, see the link below.
http://www.water.ca.gov/wateruseefficiency/landscapeordinance/docs/Title%2023%20extract%20-
%20Official%20CCR%20pages.pdf
When Required: Prior to approval of construction-related permit
Initial Approval: Bureau of Planning
Monitoring/Inspection: Bureau of Building

Specific Conditions of Approval

48. Employee Rights

Requirement: The project applicant and business owners in the project shall comply with all state and federal laws regarding employees' right to organize and bargain collectively with employers and shall comply with the City of Oakland Minimum Wage Ordinance (chapter 5.92 of the Oakland Municipal Code).

When Required: Ongoing

Initial Approval: N/A

Monitoring/Inspection: N/A

49. Public Art for Private Development

Requirement: The project is subject to the City's Public Art Requirements for Private Development, adopted by Ordinance No. 13275 C.M.S. ("Ordinance"). The public art contribution requirements are equivalent to one-half percent (0.5%) for the "residential" building development costs, and one percent (1.0%) for the "non-residential" building development costs.

The contribution requirement can be met through: 1) the installation of freely accessible art at the site; 2) the installation of freely accessible art within one-quarter mile of the site; or 3) satisfaction of alternative compliance methods described in the Ordinance, including, but not limited to, payment of an in-lieu fee contribution. The applicant shall provide proof of full payment of the in-lieu contribution and/or provide plans, for review and approval by the Planning Director, showing the installation or improvements required by the Ordinance prior to issuance of a building permit.

Proof of installation of artwork, or other alternative requirement, is required prior to the City's issuance of a final certificate of occupancy for each phase of a project unless a separate, legal binding instrument is executed ensuring compliance within a timely manner subject to City approval.

When Required: Payment of in-lieu fees and/or plans showing fulfillment of public art requirement – Prior to Issuance of Building permit

Installation of art/cultural space – Prior to Issuance of a Certificate of Occupancy.

Initial Approval: Bureau of Planning

Monitoring/Inspection: Bureau of Building

50. Affordable Residential Rental Units - Agreement and Monitoring

Requirement #1: Pursuant to Section 17.107 of the Oakland Planning Code and the State Density Bonus Law California Government Code Section 65915 et seq. ("State Density Bonus Law"), the proposed project shall provide a minimum of 74 target dwelling units available at very low/ low-income (as [41%/59%] of the units) for receiving a density bonus, concession and/or waiver of development standards.

Requirement #2: The approved residential affordable units that are part of this approval shall remain and continue to be affordable at the specified level in accordance with California Health and Safety Code Section 50053 and its implementing regulations for a term of not less than 55 years or a longer period of time if required by the construction or mortgage finance assistance program, mortgage insurance program, or rental subsidy program. This Condition of Approval must also be in compliance with Section 65915(c)(1) of the State Density Bonus Law specifically, as well as all other applicable provisions of the State Density Bonus Law.

Requirement #3: Prior to submittal of a construction-related permit, the applicant shall contact the Housing and Community Development Department (Housing Development Services Division) to enter into a Regulatory Agreement based on the City's model documents, as may be amended from time to time, governing the target dwelling units. The Agreement shall contain restrictive covenants to ensure the continued affordability of the target

dwelling units at the specified rent levels for a period of not less than fifty-five (55) years pursuant Section 65915 (c)(1) of the State Density Bonus Law, and restrict the occupancy of those units only to residents who satisfy the affordability requirement as approved for this project. Only households meeting the eligibility standards for the target dwelling units shall be eligible to occupy the target dwelling units.

If the property has an approved condominium map and the developer chooses to rent the affordable units at initial occupancy, the units cannot convert to ownership during the term of the Agreement, even if the market rate units in the development convert to ownership.
The Regulatory Agreement shall be recorded with the Alameda County Recorder's Office as an encumbrance against the property, and a copy of the recorded agreement shall be provided to and retained by the City. The Regulatory Agreement may not be subordinated in priority to any other lien interest in the property.
Requirement #4: Rental target dwelling units shall be managed / operated by the developer or developer's agent or the developer's successor. The developer of rental target dwelling units shall submit for review and approval by the Housing and Community Development Department and any other relevant City departments, an annual report identifying which units are target dwelling units, the monthly rent, vacancy information, monthly income for tenants of each target rental dwelling unit throughout the prior year, and other information required by the City. Said agreement shall maintain the tenants' privacy. The applicant shall pay to the Housing and Community Development Department an annual monitoring fee pursuant to the Master Fee Schedule (updated annually and available from the Budget Office of the City Oakland's Finance Department: https://www.oaklandca.gov/departments/finance-department) for City monitoring of target dwelling units.

Requirement #5: The floor area, number of bedrooms, and amenities (such as fixtures, appliances, location and utilities) of the affordable units shall be substantially equal in size and quality to those of the market rate units. Further, the proportion of unit types (i.e. three-bedroom and four-bedroom, etc.) of the affordable units shall be roughly the same as the project's market rate units.

Requirement #6: Tenant households in affordable units must have equal access to the project's services and facilities as tenant households in all other units within the project.

Requirement #7: Affordable units must be evenly distributed throughout the project.
Requirement #8: Applicant shall comply with the requirements of Section 65915(c)(3)(A) of the State Density Bonus Law requiring, without limitation, replacement units in those circumstances where the parcel subject to the density bonus requests contains or contained affordable units within the last five years.

Requirement #9: Applicants shall comply with all applicable provisions of State Density Bonus Law and all provisions of the City's density bonus law that are not preempted by state law.

Requirement #10: Affordable units shall be constructed concurrent with the construction of the market rate units in each phase of the project.

Requirement #11: The City will not issue final certificates of occupancy for more than fifty percent (50%) of the market rate units in any phase of development until final certificates of occupancy are issued for all of the affordable units in that phase.

When Required: First Construction-Related Permit Application and Ongoing
Initial Approval: Housing and Community Development Department – Housing Development Services Division
Ongoing Monitoring/Inspections: Housing Development Services Division

50. Submittal of Final Map and Final Map Requirements

Within two years of the effective date of approval, and ongoing

A Final Map shall be submitted to the Building Services Department, within 2 years of the approval of this permit. The final submittal for the map shall include all common areas, pathways, and dedicated sewer and storm drain easements in a form acceptable to the City Engineer and acceptance language by the City Engineer. The applicant shall record the Final Map and a written legal description of the reconfigured parcels as part of the deed with the Alameda County Recorder's Office and proof of such recordation shall be provided to the Planning Department prior to issuance of Building Permits. Failure to file a Final Parcel Map within these time limits shall nullify the previous approval or conditional approval of the Tentative Parcel Map.

51. Engineering, Surveyor and Fire Services Comments

Ongoing

The project shall comply with the Engineering Services, City Surveyor and the Fire Prevention Bureau requirements.

52. Modification to Plans

Ongoing

Changes to approved plans that would specifically amend the Tentative Parcel Map or alter the exterior of the existing building shall be submitted to and approved by the Zoning Administrator prior to recordation of the Final Parcel Map.

53. Certification of Parcel Map

Ongoing

A Parcel Map may be certified by the City Engineer at the expiration of the ten-day appeal period from the date of this approval.

54. Public Transit incentive

The Applicant shall discuss the possibility of providing Public Transportation Clipper passes for all new residences. The Applicant shall provide a copy of the final outcome of these discussions to Bureau of Planning staff.

55. Street Trees

Prior to issuance of building permit*.*

The Applicant shall provide one tree per 20' of street frontage in front of the building located on International Blvd and 27th Avenue and Mitchell Street with review and approval of species, size at time of planting, and placement in the right-of-way, subject to review and approval by the Planning and Building Department unless determined infeasible by the DOT.

56. Final Design Review

Prior to issuance of building permit.

As the design of the building is further detailed, the design elements listed below shall be revised and shall be submitted for review and approval by the Planning Director or designee prior to issuance of the building permit. Only high-quality materials will be approved. The Planning Director or designee may exercise his/her standard authority to refer the design revisions to the DRC or to the Planning Commission.

a. Final review of all exterior materials and colors.
b. More information regarding window details and installation specifications (framing material, glass, and mullions) and also of the window system and assembly, to confirm adequate thickness of components, overall quality, and recess from the outside wall. Window mullions shall be a minimum of 2" thick and the window surfaces shall be recessed a minimum of 1 ¾ to 2" from the building façade.
c. The Project applicant shall ensure that the lighting fixtures within the garage are shielded to a point below the light bulb and reflector consistent with the lighting condition.
d. The project applicant shall ensure that materials used on the ground floor are graffiti-resistant and exterior façade will stand the test of time by ensuring that dust and roadway grim are easily cleanable

CITY OF OAKLAND CONDITIONS OF APPROVAL CONT'D PAGES 25 - 32 (1)
12" = 1'-0"

12/8/2022 6:22:08 PM

PYATOK
1611 TELEGRAPH AVE.
SUITE 200
OAKLAND, CA 94612
T. 510.465.7010 | F. 510.465.8575
www.pyatok.com

THE UNITY COUNCIL
1900 FRUITVALE AVE
#2A
OAKLAND, CA 94601

2700 INTERNATIONAL
OAKLAND, CA 94601

STAMP:
LICENSED ARCHITECT
PETER WALLER
C-23551
RENEWAL DATE
4/30/2023
STATE OF CALIFORNIA

ISSUE SCHEDULE

100 SD	5/11/22
50 DD	7/15/22
100 DD	9/16/22
50 CD	11/18/22
PERMIT SET	12/09/22

REVISION SCHEDULE

NO.	ISSUE	DATE

JOB NUMBER:	1937
DRAWN BY:	MA, DV, TN, MO, SP
CHECKED BY:	Checker
ISSUE DATE:	12/09/22
SCALE:	12" = 1'-0"

TITLE:
CONDITIONS OF APPROVAL

SHEET:
G0.43

PRELIMINARY - Not for Construction -

© 2019 PYATOK ARCHITECTURE & URBAN DESIGN

56. PG&E Transformers and EBMUD dissipaters

Prior to issuance of a building permit

The Project applicant shall coordinate with PG&E regarding the placement of transformers and meters. These utilities shall be located within the proposed building or underground and not within or in view of the public right of way or sidewalk. Dissipaters shall be on-site and screened.

Applicant Statement

I have read and accept responsibility for the Conditions of Approval. I agree to abide by and conform to the Conditions of Approval, as well as to all provisions of the Oakland Planning Code and Oakland Municipal Code pertaining to the project.

_____
Signature of Project Applicant

_____
Name of Project Applicant

_____
Date

CITY OF OAKLAND CONDITIONS OF APPROVAL CONT'D PAGES 33 (1)
12" = 1'-0"

CITY OF OAKLAND
Oakland Fire Department
Fire Prevention Bureau

250 Frank Ogawa Plaza, Suite 3341
Oakland, CA 94612
(510) 238-3851 - VOICE
(510) 238-6739 - FAX

MEMORANDUM

To: Office of Planning and Zoning -
Attn: Jason Madani
From: Philip Basada, Fire Protection Engineer

Date: August 14, 2021
Approval: Orlando Arriola, Fire Marshal
Re: **Fire Review – Proposed Development Plan**
Accela city applications: 2700 International Boulevard
2020-42083
PLN20152 To demolish buildings, merge lots into one new lot and construct a six-story building with 74 affordable residential units (and one management unit) over ground-floor commercial space and parking garage. Multiple APNs. Portion of the corner lot on 27th Ave is in the RM-2, and two of the rear lots along Mitchell St are also in the RM-2 Zone. Tree Permit: T2000092.
ZP200030 Existing:
3-Story Medical-Dental Building, 2 Story Office Building, Vacant Commercial Land/Surface parking"

Proposed:
"5 Story new construction mixed-use building approximately 90,000 GSF, 4 Stories affordable housing (85 units) and common space green podium courtyard over 1 ground story commercial retail. Covered surface parking included for retail and residents."
TPM1113

This review: **Preliminary Development Plan (PDP)**

Summary. The Fire Prevention Bureau Code Enforcement Unit has reviewed the vesting tentative tract map improvements for above proposed development. The following review comments are based on issues related to fire code provisions and concerns on water supply, fire apparatus access.

The applicant proposes to merge 7 parcels to build a new mixed-use residential building bounded by 27th Ave, Mitchel Ave, and International Boulevard.

The existing access roads with permitted parking at both sides of the streets along 27th Avenue and Mitchell Avenue will not suffice the minimum fire truck access requirements for

the fire ladder truck due to existing narrow road widths. CFC Section D105.2 requires 26 feet minimum unobstructed fire apparatus access to deploy the ladder truck without overhead power lines. The proposed fire service mains to the site will connect to an existing water mains available on any of the street frontages.

The project conditions set by the Fire Department is not intended to supersede the more restrictive conditions enforced by other city agencies. The applicant shall meet the more restrictive municipal code provisions required by other agencies unless adequate alternatives are accepted by the Advisory Agency.

If the Advisory Agency approves the project, please see attached conditions of approval:

1. **Utilities and Service Systems, Hydrant Spacing:**
   a. 300-foot spacing between hydrants shall be provided with a minimum available fire flow of 1500 gpm at 20 psi or minimum water flow available based on 2019 CFC Appendix B water demand on hydrants based on for the type of construction of the proposed building. On-site water supply mains and hydrants shall be provided along all fire apparatus access roads at 300-foot maximum spacing. Hydrant shall be at least 150 feet to the farthest exterior walls on grade. Ref: 2019 CFC Appendix C and City Ordinance 13577.
   b. No overhead power cables or utilities that may interfere with fire truck ladder rescue or fire fighting shall be installed in front of the new building proposed for this development. All power cable utilities shall be under grounded to eliminate hazards posed to rescue and fire fighting personnel. Ref.: 2019 CFC Section 901.4.3 and Section D105.
   c. Available water supply of on-site hydrants shall match typical EBMUD hydrants in the city with 2 ½" hose and 4 ½" steamer connections. Please submit hydrant flow tests and/or hydraulic simulation to OFD to determine the viability of proposed types of construction with available fire flow.

2. **Fire Apparatus Access Roads, Off-Street Parking, Fire Truck Access to individual parcels:**
   a. Construction documents. Construction plans for fire access roads and plans for the water supply and distribution systems shall be submitted

to Oakland Fire Department for review and approval prior to construction. Ref.: 2016 CFC 501.3, 501.4.
b. Construction of buildings. Access roads (and public hydrants) shall be available prior to and during construction.
c. Fire apparatus access road widths shall adopt the fire department's access standards as adopted in the amended 2016 CFC Chapter 5, CFC Appendix D and City Ordinance 13577 Appendix figures. The existing roads shall allow OFD ladder and engine apparatuses from the City's fire stations but also those from other cities where the city's Fire Department has mutual response agreements with.
d. Fire apparatus access shall be provided per 2019 CFC Chapter 5 and Appendix D, and City Ordinance 13577, specifically:
   - 27th Avenue shall be provided with complying 26-foot wide fire apparatus access road width by eliminating parking on the opposite side of the street frontage of the property or by obtaining a fire code variance.
   - Mitchel Avenue shall be provided with complying 26-foot wide fire apparatus access road width by eliminating parking on the opposite side of the street frontage of the property or by obtaining a fire code variance.

e. The portion of the property previously used as a parking lot needs to have soils tested or be cleared from Alameda County Environmental Health Agency's list for contaminated soils if the property is listed. Verify that there are no existing underground fuel lines in the proposed development.
f. Follow the City's Department of Transportation Agency if its road design standards are more restrictive than the 2016 CFC Appendix D and City Ordinance 13401. The following shall be used to consider the options for parallel parking on public streets:
   i. 20 feet effective road width: 0 parking on either side of the street where proposed buildings are 30 feet or less in height, when a hydrant is not required.
   ii. 26 feet effective road width: 0 parking on either side of the street where proposed buildings are more than 30 feet in height and served by on-site hydrants.
   iii. 28 feet effective road width: 1 parking on only one side of the street, where proposed buildings are 30 feet or less in height, and when a hydrant is not required.

   iv. 34 feet effective road width: 1 parking on only one side of the street, where proposed buildings are more than 30 feet less in height and when a hydrant is not required.
   v. 36 feet effective road width: parking on both sides of the street, where proposed buildings are less than 30 feet less in height and when hydrant/s are not required.
   vi. 42 feet effective road width: parking on both sides of the street, where proposed buildings are more than 30 feet in height and when street hydrant/s are required.

The above may be modified to include Public Works Agency design standards and fire code exceptions. An effective road width having no less than 26 feet for fire apparatus and equipment staging shall be maintained. Ref.: 2019 California Fire Code Appendix D and City Ordinance 13577.

3. **Fire Department Emergency Communications Coverage**
   a. Emergency responder communications coverage within the buildings shall be provided as a required improvement per CFC 510 to accommodate the radio frequencies used in Oakland, Berkeley, Piedmont, and the Alameda County Fire Department.

4. **Vegetation**
   a. The tree species selected shall be maintained to allow fire apparatus access along streets - 26 feet of unobstructed travel road width and 13'6" clear height from trees.
   b. 10 feet clear site opening access from street sidewalks to the highest window sill of rescue openings shall be maintained on tree limbs and branches, except for R-2 occupancies where the type of construction meets 2019 CFC 1030 exceptions.

5. **Building Permits**
   a. The new building proposed in this development shall comply as required per City Ordinance for new construction. Fire department connections on buildings equipped with standpipes shall be within 100 feet of on-site hydrants.
   b. New buildings shall be equipped with an approved fire sprinkler and standpipe systems as adopted per California Fire Code as amended per applicable City Fire Code Ordinance.
   c. CFC 905 shall supersede NFPA 14 on the maximum hose reach permitted for buildings protected by fire sprinkler system.

   d. The Class 1 standpipe requirements at the court level shall be separate from the standpipe hose connections located at stairwells or interior corridors.
   e. Emergency Responder Radio Communications (ERRCS) per CFC 510 shall be provided.
   f. Access roads, hydrant spacing and on-site water supply availability shall meet or exceed the provisions of 2019 CFC Appendices B, C and D, as amended.
   g. The Type V-A type of construction in the project profile requires further fire review upon (1) submittal of the purveyor's water flow tests or hydraulic simulation of available water supply, and (2) analysis of the building code summary for mixed types of construction.
   h. Water flow availability per CFC Appendix B and minimum building fire resistance per CFC 1030 may affect the acceptable type of proposed construction.
   i. The building permit filing date shall determine the applicable fire code ordinance applicable to the proposed building.
   j. The Fire Prevention Bureau has determined that permitted public assembly activities at roof top levels shall not be permitted where the roof level exceeds 75 feet. Limited uses of the roof for 49 persons or less are acceptable.

6. **Environmental Hazards and potential hazards.**
   a. The developer and OFD's Haz Mat Group shall coordinate with the Alameda County Department of Health Agency to verify that the project site is suitable for the proposed development. A verification of the property's soils report may be required by Haz Mat. The developer shall clear with the County's Health Department for Haz Mat to confirm the suitability of the site from hazardous contamination.
   b. Please coordinate with OFD Haz Mat Group when soil contamination or underground fuel tanks and piping are discovered.

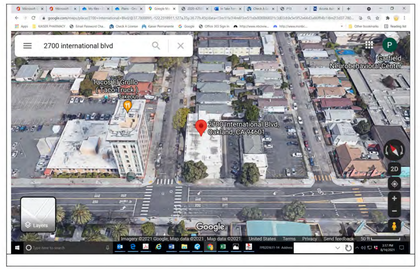

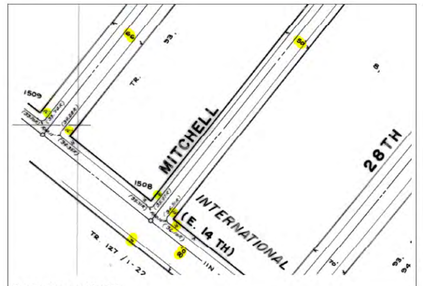

Ref.: City Monument Map 133.

FIRE DEPAREMENT CONDITIONS OF APPROVAL PAGES 1 - 7 (2)
12" = 1'-0"

12/8/2022 6:22:11 PM

PYATOK
1611 TELEGRAPH AVE.
SUITE 200
OAKLAND, CA 94612
T. 510.465.7010 | F. 510.465.8575
www.pyatok.com

THE UNITY COUNCIL
1900 FRUITVALE AVE
#2A
OAKLAND, CA 94601

2700 INTERNATIONAL
OAKLAND, CA 94601

STAMP:
LICENSED ARCHITECT
PETER WALLER
C-23554
4/30/2023
STATE OF CALIFORNIA

ISSUE SCHEDULE

100 SD	5/11/22
50 DD	7/15/22
100 DD	9/16/22
50 CD	11/18/22
PERMIT SET	12/09/22

REVISION SCHEDULE

NO.	ISSUE	DATE

JOB NUMBER:	1937
DRAWN BY:	MA, DV, TN, MO, SP
CHECKED BY:	Checker
ISSUE DATE:	12/09/22
SCALE:	12" = 1'-0"

TITLE:
CONDITIONS OF APPROVAL

SHEET:
G0.44

PRELIMINARY - Not for Construction -

© 2019 PYATOK ARCHITECTURE & URBAN DESIGN

CITY OF OAKLAND, Department of Transportation – Office of the City Surveyor
If the project is approved by the Advisory Agency, attach the Survey Department's "Conditions of Approval" provided below

Planning/Zoning Number(s) PLN20512			**Survey Staff Contact:** Negine Malboubi		
Project Address 2700 International Blvd.			**Project Description** 7 Lot Merger		
Tentative Map No. TPM11139	No. of New Lots 1	No. Condominiums N/A	☐ Mixed Use		
☐ No Map	☐ Parcel Map Waiver	☐ Merger	☐ Lot Line Adjustment LLA	No. Existing Lots LLA	No. New Lots LLA

GENERAL CONDITIONS OF APPROVAL	SPECIFIC PROJECT CONDITIONS OF APPROVAL
FINAL PARCEL MAP/TRACT MAP 1. The final parcel map shall clearly show the process and development of the location of the boundary lines from adjoining streets and boundaries. This includes how the depth of the lot was confirmed. 2. Depending upon this process, and at discretion of the City Surveyor, a standard city monument(s) or a private monument meeting City specifications may be required to be installed at an approved location. 3. If the tentative map does not cite a specific Benchmark as the basis for the City of Oakland Datum, or if then as **a Condition of Approval**, a Standard City Benchmark shall be installed at the nearest intersection, or as directed by the City Surveyor, and the appropriate paperwork submitted to this office for approval. Additionally, a Standard City Benchmark may be required where there is an absence of benchmarks along nearest block intersections. 4. The applicant must investigate and confirm, in writing, that no portion of the project lies with a Seismic Hazard area as shown upon the State Geologist maps (**reference is made to PRC Division 2, Chapter 7.8 section 2696**). If the project does lie within such an area, the appropriate certificate shall be added to the final map. A copy of this certificate is available from the City.	1a) Monument all existing parcel lines 1b) Label the width of the Right of Way for Mitchell Street 1c) Is the the owner the subdivider? If so, please state, if not, provide the name and address of the subdivider. 1d) Please update the Title of the Parcel Map Submittal to adhere to the following format: PARCEL MAP 11139 BEING A MERGER OF (..SHORT LEGAL) 1e) Replace Benchmark 1508
TENATIVE MAPS 5. The tentative map is filed in conformance with Subdivision Map Act §66452 and Title 16 requirements (16.24.100 and 16.24.070) 6. Surveyor's Statement on the map written in accordance with Section 15.04.2.223 of the Oakland Municipal Code. 7. Elevations: Are based upon the City of Oakland Datum and must cite the City Benchmark used to establish the elevations. Note: **Curb return elevations are not acceptable.** 8. All proposed easements/quitclaimed easements must be shown on the tentative map with corresponding instrument numbers.	8a) In response to General Note #6A: The proposed development will adhere to all requirements and restrictions as stated on the easement granted to Pacific Telephone and Telegraph company, Serial No. 84-004119

250 Frank Ogawa Plaza, Suite 4344; Oakland, California 94612; 510-238- 3647

CITY OF OAKLAND Department of Transportation
Survey Department "Conditions of Approval"

CONDOMINIUMS 9. In any common interest developments, the HOA may be required to address the utilities, vehicular access, common areas, and parking to each unit in the Covenants, Conditions, Rules and Restrictions (CC&Rs) for this project. *10. Condo Conversion:* A) Requirements for Noise abatement/insulation prior to the sale of any unit. B) Requirements for CC&Rs approved by planning prior to occupancy. C) Recordation of the final map must be completed prior to the issuance of a certificate of occupancy.	N/A
ENCROACHMENTS 11.No portion of any new structure shall extend beyond the boundary lines without the appropriate easement. Portions which will extend beyond the ROW line must be approved by the Right of Way Engineer. 12.Neighboring fence encroachments ≥ 0.50' must be resolved by one of the following: A)Removal B)Relocation C)Agreement/Easement with neighbor D)Showing the fence lines on parcel map submiittal 13. Building encroachments ≥ 0.30' must be resolved by the following: A)Removal B)Relocation C)Easement D)Written agreement or contract with neighbor (less desirable option)	11a) Applicant shall obtain an encroachment permit for any existing fences that are in the Public Right of Way (ie. wrought iron fence on the sidewalk of Mitchell Way, and the northwestern corner of Parcel 7) Indenture Agreement shall be executed before Final Parcel Map is approved for recordation. Other options to address this encroachment include removal and relocation.
OTHER 14.	N/A

250 Frank Ogawa Plaza, Suite 4344; Oakland, California 94612; 510-238- 3647

CITY OF OAKLAND Department of Transportation
Survey Department "Conditions of Approval"

PARCEL MAP WAIVER REQUIREMENTS 15. Creation of a New Line: a) Monument new parcel lines. b) A Record of Survey, per PLS Act 8762, will be filed along with the Parcel Map Waiver memorializing the newly created parcel line. c) Said Record of Survey will also show the recordation instrument number of the Parcel Map Waiver Deed. d) A copy of all items listed below shall be sent to the Survey Department after recordation (stamped and sealed by the county): ○ PMW Certificate executed and notarized by Planning Director, and the owner of the subject parcels. ○ PMW map at reduced size ○ Deed, stamped Legal description of the resultant parcel with an Exhibit map.	N/A

250 Frank Ogawa Plaza, Suite 4344; Oakland, California 94612; 510-238- 3647

DEPT. OF TRANSPORTATION - SURVEY CONDITIONS OF APPROVAL
PAGES 1 - 3
12" = 1'-0" (1)

City of Oakland
Department of Transportation, Engineering Services
If Project is approved by the Advisory Agency, attach the Engineering Services "Conditions of Approval" provided below.

Planning/Zoning Number(s) PLN20152			**Engineering Staff Contact** E. Ellsworth, A.E.II		
Project Address 2700 International Blvd.			**Project Description** 6-Story, 75 housing units, commercial		
Tentative Map No. TPM11139	No. of New Lots 1	No. Condominiums	☑ Mixed Use		
☐ No Map	☐ Parcel Map Waiver	☐ Merger	☐ Lot Line Adjustment LLA	No. Existing Lots LLA	No. New Lots LLA

GENERAL REQUIREMENTS	SPECIFIC PROJECT CONDITIONS OF APPROVAL
SIDEWALKS, CURB AND GUTTERS 1. Existing sidewalks fronting subject property must be compliant with ADA standards. 2. Uplifted, uneven, damaged sidewalks shall be repaired with no more than ¼ inch lift and no more than 2% cross slope. 3. Sidewalk clear width of 5.5 feet minimum is required and must not be less than 50-inches between obstacles, poles, trees, hydrants, pinch points for ADA access. 4. Existing sidewalks, curbs/gutter/driveway approaches damaged, broken or if non-standard shall be repaired. 5. A Curb, Gutter and Sidewalk (CGS) permit is required to repair or construct sidewalk. 6. Infrastructure and improvements to be privately maintained within the right of way and any non-standard features MAY be accepted with an Encroachment Permit. 7. City may revoke encroachment permit at its sole discretion and may charge property owner(s) for use of the right-of-way.	Prior to recording the Parcel Map, or beginning any work in the City right-of-way, the applicant shall submit to DOT Engineering Services a PX-Permit application and enter into a P-Job Agreement. The PX-plans shall be prepared by a Registered Civil Engineer. Additional and separate utility excavation permit(s) for joint trench work are required. Separate obtruction permits and traffic control plans shall be obtained prior to beginning any work in the right-of-way.
STREET PAVING AND STRIPING 8. Street and roadway area(s) fronting the development must be resurfaced up to one traffic lane in width 13 ft. or to the centerline of the street, after completion of construction and as required by the Inspector. 9. Evaluation of the street's Pavement Condition Index at time plans are submitted for permit review shall determine any restoration requirements. 10. Existing striping fronting the property and up to 1 block length shall be restored to the satisfaction of the Inspector. Thermoplastic shall be required unless specified otherwise in the plans approved for construction. 11. "Moratorium Streets" are resurfaced or newly constructed streets within the past 5-year period. No trenching or excavation is permitted on any Moratorium Street without the written authorization of the Public Works Director.	General requirements apply prior to issuance of a PX-Permit or utility excavation permit. All work with International Blvd. requires separate review and permit by Caltrans. International Blvd. is within Caltrans right-of-way. A copy of the approved Caltrans permit shall be provided to DOT Engineering Services prior to approval of the PX-Plans and issuance of the PX-Permit.
DRIVEWAYS 12. Driveway approach, length, width, driveway separation, clearances from poles and utilities, type of curb, driveway angle, shall be approved by Bureau of Planning in advance of any review by Engineering Services. 13. Any existing driveway that will no longer be required to serve the property shall be replaced with new sidewalk curb and gutter, with curb striping as required by Inspector.	General requirements apply prior to issuance of the PX-Permit.
CURB RAMPS 14. New curb ramps shall meet the latest State of California standards when plans are submitted for review.	General requirements apply prior to issuance of the PX-Permit.

!PERMITS /DOT Forms/ Engr.Srv.COA/Version April 2018

CITY OF OAKLAND Department of Transportation
Engineering Services "Conditions of Approval"

15. Curb ramps shall be directional unless approved otherwise in writing by the City Engineer. 16. New curb ramps are required at intersections fronting the project site and when the use or occupancy necessitates installation or replacement of curb ramps. Additional curb ramps required by the City Engineer shall be installed by the project sponsor. 17. Where a new curb ramp is required for the project the curb ramp located on the opposite side of the roadway, across a marked or un-marked crosswalk, shall also be installed or upgraded to be ADA compliant by the project sponsor.	
STREET GEOMETRY AND STRIPING DESIGN 18. New striping, curb painting, bulb-outs, changes to existing dimensions, impact to traffic resulting from development, traffic pattern, circulation, signals, traffic count, street/lane change shall be reviewed and approved by the City's Traffic Engineer. 19. Any alteration to geometry of roadway/sidewalk, markings, traffic control signs and devices shall be reviewed and approved by the City's Traffic Engineer. 20. Traffic and parking sign posts shall be coated with anti-graffiti coating. 21. Traffic Control Plans (TCP) for temporary traffic control measures shall be submitted separately for review and approval by City's Traffic Engineer prior to permit issuance and when the TCP is adjusted and updated during construction.	General requirements apply prior to issuance of a PX-Permit.
SANITARY SEWER 22. Sanitary sewer impact analysis is required when new development results in a net increase of volume of wastewater flow to the City's sanitary sewer system. Sewer flow calculations prepared by developer's engineer must include existing and proposed flows. Developer shall submit analysis with completed application for review. Mitigation fees shall be paid prior to issuance of a Building or PX permit whichever occurs first. 23. A "PSL" certificate, Sewer Lateral Permit, and EBMUD Inspection are required for all projects where construction costs are one-hundred thousand dollars ($100K +) or more. 24. A Sewer Lateral permit (SL) is required for any new sewer lateral or rehabilitation of existing lateral. Abandonment of a sewer lateral requires a separate permit. 25. Sewer profiles shall be included on the plans approved for construction. If existing utilities are within twelve inches (12") of proposed sewer, engineer shall have existing utility potholed and resolve conflict before approval of plans.	General requirements, 22, 23, 24 and 25 apply. The applicant shall pay the sewer mitigation fees owed for the development prior to issuance of a building permit or PX-Permit, whichever occurs first.
STORM DRAINS 26. Connection of storm drain to sewer line is prohibited. Any unauthorized connection shall be separated from the sanitary sewer. 27. Drainage plans shall be submitted for review and approval. Plans shall follow City standard details and design standards. Blind connections or tap connections are prohibited for storm drains.	General requirements apply prior to issuance of a PX-Permit.

!PERMITS/DOT Forms/Engr.Srv.COA/Version April 2018

CITY OF OAKLAND Department of Transportation
Engineering Services "Conditions of Approval"

28. Hydrology and Hydraulic Calculations, shall meet City's Storm Drainage Design Standards. 29. Reduction in Peak Flow by 25% or to the extent possible is required.	
STORM WATER TREATMENT 30. Requirements for permanent and temporary storm water pollution prevention, Alameda County Clean Water Program (C.3), shall be included in the Building improvement plans for on-site work. Any approved storm drain from on-site development shall be tied to an inlet structure at the back of curb designating public and private ownership. 31. Permanent storm water treatment (BMP's) to service the development shall be privately maintained and included in the O&M Agreement for the project. 32. Roof runoff must be directed through an approved treatment device prior to entering the City's storm drainage system. 33. Right-of-way shall not be used for storm water treatment features.	General requirements apply prior to issuance of a PX-Permit.
STREET TREES AND LANDSCAPING (PRIVATE) 34. Trees and irrigation for the proposed development shall be owned and maintained by the property owner(s). 35. Landscape and irrigation plans shall be submitted with the civil plans for work (PX permit) for review and approval by the City's Arborist. 36. Landscape, irrigation plans and tree species shall meet City standards for Street Tree Planting. 37. Tree shall be spaced twenty feet (20') on center and shall not obstruct street lights. Tree wells shall be 3 ft. x 3ft. or 4 ft. x 4 ft. (minimum) for mature tree height of 25 to 40 feet. 38. Tree Grates, Root Barrier and Staking Details for new trees shall be included in the approved plans. Tree Grates must be ADA compliant.	General requirements apply prior to issuance of a PX-Permit.
EASEMENTS AND ENCROACHMENTS 39. All property lines, existing and proposed easements, shall be clearly shown on the plans for construction (PX permit). 40. Easement dedication or vacation requires separate application and permit (PPE permit) if not included on a Final Tract Map or Parcel Map. 41. Major Encroachment permits require City Council resolution and Indenture Agreement with County Recorder's Number shown on the Final or Parcel Map. 42. Permanent building elements encroaching into the right-of-way normally require a Major Encroachment (ENMJ permit).Other approved encroachments may be part of Minor Encroachment (ENMI permit). 43. City may revoke encroachment permit at its sole discretion and may charge property owner(s) for use of the right-of-way.	General requirements apply prior to issuance of a Building, PX-Permit, or Construction related permit. Permitting costs shall be paid by the applicant at the time the application is submitted and in compliance with the City's current Master Fee Schedule. Applicant shall obtain an encroachment permit for privately maintained improvements within the City's right-of-way.
SITE PLAN 44. A Site Plan shall be provided with permit plan set and include: north arrow, scale, property boundaries, topography, vegetation, proposed/existing structures,	General requirements apply prior to issuance of any construction permit.

!PERMITS/DOT Forms/Engr.Srv.COA/Version April 2018

CITY OF OAKLAND Department of Transportation
Engineering Services "Conditions of Approval"

utilities, easements, roadways, monuments, wells, and any important key elements.	
STREET LIGHTS AND UTILITIES (PW ELECTRICAL) 45. A photometric plan and analysis of existing and proposed street lights is required for all projects requiring a PX permit and as determined by the City Engineer. Design shall meet City Outdoor Lighting Standards. http://www2.oaklandnet.com/oakca1/groups/pwa/documents/policy/oak026007.pdf 46. Upon review and approval of the photometrics analysis, the project sponsor shall design and include additional streetlights as required by the City and shall also provide 10% spare streetlight fixtures for City's Electrical Maintenance Operations. 47. Pedestrian signal and push buttons for intersection crossings shall be included in the plans for construction when required by the Traffic Engineer. 48. Utility undergrounding shall be clearly identified on all construction permitted plans as approved by the Project Planner, Oakland Fire Department, Public Works Department and Dept. of Transportation. 49. Pull boxes shall be locking. 50. Existing, reinstalled and new Streetlights, Parking Meters and Kiosks shall be included on the plans approved for construction. Separate fees and approvals by Public Works Maintenance is required to remove or install Streetlights, Parking Meters and Kiosk.	General requirements apply prior to issuance of a PX-Permit. For #48, if required by Oakland Fire Department for ladder truck accessibilty to the new 6-story building, the applicant shall underground existing overhead utilities fronting the project site. There are existing ovehead utilities on 27th Avenue and across the street on Mitchell Street with drop connections to the property. Applicant shall obtain a separate Utility Excavation Permit from DOT for undergrounding existing overhead utilities. The preliminary joint trench plans shall be submitted with the PX-Plans for review. Prior to Issuance of an Occupancy Permit for the new building all utility undergrounding work must be completed to the satisfaction of the DOT Supervising Inspector.
SPECIAL ZONES: CDMG Designation (LS/LQ), A-P Zone, Flood Zone, Creek/water course, GAAD, etc. 51. Design, approvals, outside agency permits, and construction methods shall meet all applicable Federal, State, and City's Municipal Code requirements for properties located in hazard zone and flood zone. 52. Peer Review of Soils, Geotechnical, Hydrology, Hydraulic, and Structural Reports, engineering plans, grading, remediation, final map may be required. 53. CDMG Designation and potential for liquefaction(LQ) and/or landslide(LS) shall be clearly identified on individual lots of the Tentative Map, Parcel Map of final Tract Map.	General requirements may apply prior to issuance of any construction or building permits. Parcel is located in Liquefaction Hazard Zone Severity 3.
TENTATIVE MAP, PARCEL MAP, TRACT MAP 54. Fire Access, Emergency Vehicle Access, Shared Access (Agreement or CC&R's), Utility Easements shall be clearly shown and identified on Maps. 55. Setbacks from the property lines, buffer areas, easements, buildings and separation required between structures and buildings shall be identified on Tentative Map. 56. After approval by Planning and Zoning of a Tentative Map a separate application to Engineering Services is required for review and approval of the Parcel or Tract Map by the City Surveyor and City Engineer. 57. Tract Map and Subdivision Improvement Agreement (SIA) requires City Council Approval. 58. Survey Monuments Protection, Surety/Bond may be required prior to approval of Parcel or Final Map.	The Parcel Map Application Fees must be paid after the Parcel Map application is submitted to DOT, 4th Floor Permit Counter and prior to review and approval. General requirements 54, 55 and 56 apply. General requirement 58 may apply as determined by the City Surveyor prior to recording the Parcel Map.

!PERMITS/DOT Forms/Engr.Srv.COA/Version April 2018

CITY OF OAKLAND Department of Transportation
Engineering Services "Conditions of Approval"

CONSTRUCTION 59. All work within the City's right-of-way or easement requires a valid permit. 60. Shoring Plans, Retaining Walls, Streetlight and Traffic Signal Pole Foundations and other structures require a separate Building Permit from the Building Department. 61. An Obstruction Permit (OB) may be required prior to issuance of a Grading, Building, PX, CGS or another related permit. OB permits are required for temporary or permanent removal of metered and non-metered parking spaces, sidewalk closure(s), staging of materials, construction dewatering equipment, blocking, placement of storage units, equipment within the right-of-way. 62. An approved Traffic Control Plan (TCP) may be required prior to issuance of an OB permit, PX permit or any work requiring Traffic Control Measures within the City's right-of-way.	General requirements apply prior to issuance of any construction permit, utility excavation permit or PX-Permit. Applicant shall obtain a OB-Permit for the removal of any parking meters or kiosks. All existing and reinstallation and/or new parking meters/kiosks shall be shown and identified on the PX-Plans.
OTHER 63. Projects with *"Special"* considerations, for example; may require utility undergrounding of overhead utilities, improvements off-site (i.e. new traffic signal), ownership of land/project sponsor TCSE Economics & Workforce Development, a City Capital Project, or may be part of a larger "Master Planned Development" with Development Agreement and/or phased Final Maps.	General requirements may apply prior to issuance of any permits for construction. International Blvd. is within Caltrans' right-of-way and requires separate review and permit from Caltrans.

PER CITY RECORDS AND INFORMATION RECEIVED FOR REVIEW ITEMS NOTED BELOW MAY AFFECT THE DESIGN, REVIEW AND APPROVAL, PERMITTING, MAP APPROVAL PROCESSES. *(The City assumes No Responsibility for the Accuracy and/or Completeness thereof.)*

Preliminary Title Report		Vacation / Dedication	
Flood Zone		Easement	
Creek Permit / Water Course		Existing Utilities / Overhead	UUG existing OH on 27th Ave.
Land / Boundary Survey		BART	
Lot Dimension(s)		CALTRANS	International Blvd.
Sidewalk Clearance (i.e. 5.5 ft.)		EBMUD	
Sidewalk Curb Ramps		PG&E	
Encroachment		UPRR	
CDMG Designation		City of Oakland Ownership	
Land Stability	Liquefaction Zone Severity 3	City of Berkley	
Street Lighting		City of Emeryville	
Traffic Circulation / Bicycle Lane		City of Piedmont	
Traffic Signal		Other	

*Additional information is provided below:

Applicant must address all Oakland Fire Departments requirements for utility undergrounding of existing overhead services.
International Blvd. is within Caltrans' right-of-way and requires separate review and permit are required by Caltrans.

Planning/Zoning Number	Map Number *(if applicable)*	DATE
PLN20152	TPM11139	12/04/20

!PERMITS/DOT Forms/Engr.Srv.COA/Version April 2018

DEPT. OF TRANSPORTATION - ENGINEERING SERVICES CONDITIONS OF APPROVAL PAGES 1 - 5
12" = 1'-0" (2)

PYATOK
1611 TELEGRAPH AVE.
SUITE 200
OAKLAND, CA 94612
T. 510.465.7010 | F. 510.465.8575
www.pyatok.com

THE UNITY COUNCIL
1900 FRUITVALE AVE
#2A
OAKLAND, CA 94601

2700 INTERNATIONAL
OAKLAND, CA 94601

STAMP:
LICENSED ARCHITECT — PETER WALLER — C-35561 — 4/30/2023 — STATE OF CALIFORNIA

ISSUE SCHEDULE

100 SD	5/11/22
50 DD	7/15/22
100 DD	9/16/22
50 CD	11/18/22
PERMIT SET	12/09/22

REVISION SCHEDULE

NO.	ISSUE	DATE

JOB NUMBER:	1937
DRAWN BY:	MA, DV, TN, MO, SP
CHECKED BY:	Checker
ISSUE DATE:	12/09/22
SCALE:	12" = 1'-0"
TITLE:	**CONDITIONS OF APPROVAL**

SHEET:
G0.45

PRELIMINARY - Not for Construction -

© 2019 PYATOK ARCHITECTURE & URBAN DESIGN

12/8/2022 6:22:13 PM

12/8/2022 6:22:16 PM

STATE OF CALIFORNIA
Solar Ready Areas
NRCC-SRA-E (Created 11/19) CALIFORNIA ENERGY COMMISSION

CERTIFICATE OF COMPLIANCE		NRCC-SRA-E
This document is used to demonstrate compliance with mandatory requirements in §110.10 for newly constructed buildings which are either high-rise multifamily ten stories or fewer, hotel/motel ten stories or fewer or all other nonresidential buildings three stories or fewer. It is also used to demonstrate compliance for additions to these building types which add more than 2,000 ft² of roof area. Alterations or additions of less than 2,000 ft² of roof area are not required to comply with §110.10.		
Project Name: 2700 International Boulevard	Report Page:	Page 1 of 5
Project Address: 2700 International Blvd., Oakland, CA 94601	Date Prepared:	12/1/2022

A. GENERAL INFORMATION

01	Project Location (city)	Oakland	04	Building Type	High-rise multifamily 10 stories or fewer
02	Climate Zone	3	05	Construction Type	New Construction
03	☐ Roof is designed for vehicle traffic, parking or for heliport				

B. PROJECT SCOPE

Table Instructions: Select the compliance path the project is using to comply per §110.10(b)1B.

My project consists of (check one):

01	
☑ Provide Solar Ready Area no exceptions	The project has allocated a solar zone on the roof plan per requirements in §110.10(b), as documented in Table F.
☐ Exception to Solar Ready Area: Installed Solar Photovoltaic System	The project includes a permanently installed solar electric system having a nameplate DC power rating, measured under Standard Test Conditions, of no less than one watt per square foot of roof area, as documented in Table G.
☐ Exception to Solar Ready Area: Installed Solar Water Heating System	The project is a hotel/motel or high-rise multifamily occupancy and includes a permanently installed domestic solar water-heating system complying with §150.1(c)8Biii and Reference Residential Appendix RA4, as documented in Table H.
☐ Exception to Solar Ready Area: Smart Thermostat and Alternative Energy Efficiency Measure	The project is a high-rise multifamily occupancy where all thermostats in each dwelling unit comply with §110.12(a) AND at least one additional measure listed in Exception 4 to §110.10(b)1B is installed, as documented in Table I.

C. COMPLIANCE RESULTS

Table Instructions: If any cell on this table says "DOES NOT COMPLY" or "COMPLIES with Exceptional Conditions" refer to Table D. for guidance or see the applicable Table referenced below

Allocated Solar Zone				Installed PV System				Installed SWH System				Smart Tstat and Alternative EE Measure		Compliance Results
01		02		03		04		05		06		07	08	09
Required Minimum Area (ft²)	≤	Designated Area (ft²)	OR	Required Minimum DC Power Rating (Watts)	≤	Designed DC Power Rating (Watts)	OR	Required Minimum Solar Savings Fraction	≤	Designed/ Rated Solar Savings Fraction	OR	JA5 Compliant Thermostat Specified?	Alternative Energy Efficiency Measure	
(See Table F)				(See Table G)				(See Table H)				(See Table I)		
2,126.4	≤	4,531	OR		≤		OR		≤		OR			COMPLIES
		E3.01, E5.02	Location in construction documents showing the location for inverters and metering equipment and a pathway for the routing of conduit/ plumbing to the electrical service/ water heating system per §110.10(c).											COMPLIES

STATE OF CALIFORNIA
Solar Ready Areas
NRCC-SRA-E (Created 11/19) CALIFORNIA ENERGY COMMISSION

CERTIFICATE OF COMPLIANCE		NRCC-SRA-E
Project Name: 2700 International Boulevard	Report Page:	Page 2 of 5
Project Address: 2700 International Blvd., Oakland, CA 94601	Date Prepared:	12/1/2022

D. EXCEPTIONAL CONDITIONS

This table is auto-filled with uneditable comments because of selections made or data entered in tables throughout the form.

No exceptional conditions apply to this project.

E. ADDITIONAL REMARKS

This table includes remarks made by the permit applicant to the Authority Having Jurisdiction.

F. ALLOCATED SOLAR ZONE

Table Instructions: Complete this table if the project is designating a solar zone to comply with §110.10(b)1B. For new construction consider total roof area; for additions consider newly added roof area.

Required Minimum Solar Zone

01	02	03	04	05	06			07	08
					Potential Solar Zone Areas: Roof Areas with ≥ 70% Solar Access				
Minimum Solar Zone Area Calculation Method	Total New or Added Roof Area (ft²)	Total New or Added Roof Area Covered with Skylights (ft²)	Minimum Solar Zone Based on Total or Added Roof Area (0.15 x (Roof-Skylt)) (ft²)	Method/Tool(s) Used to Determine Annual Solar Access for Potential Zones¹	Low-Sloped Area (≤ 2:12 pitch) (ft²)	Steep-Sloped Area (> 2:12 pitch), Oriented 90° - 300° (ft²)	Total Potential Solar Zone Area (ft²)	Minimum Solar Zone Based on Potential Zone (0.5 x (Total Potential Zone)) (ft²)	Required Minimum Solar Zone Area (ft²)
Total New or Added Roof Area	14,176	0	2,126.4						2,126.4

Designated Solar Zone Subareas

09	10	11	12	13	14	15	16	17	18	19
Subarea Name or Tag	Building Plan Reference	Roof or Overhang Slope (Low ≤ 2:12 pitch) (Steep > 2:12 pitch)	Is Steep-Sloped Roof or Overhang between 90 and 300 degrees?	Subarea Complies with Title 24, Part 9	Solar Zone Subarea Free of Obstructions per §110.10(b)3A	Subarea is Required Distance from Potential Obstructions per §110.10(b)3B	Is the Smallest Dimension 5 feet or greater?	Min. Area Required per Subarea (ft²)	Designated Area (ft²)	Subarea Complies?

Table Continued

STATE OF CALIFORNIA
Solar Ready Areas
NRCC-SRA-E (Created 11/19) CALIFORNIA ENERGY COMMISSION

CERTIFICATE OF COMPLIANCE		NRCC-SRA-E
Project Name: 2700 International Boulevard	Report Page:	Page 3 of 5
Project Address: 2700 International Blvd., Oakland, CA 94601	Date Prepared:	12/1/2022

Designated Solar Zone Subareas

09	10	11	12	13	14	15	16	17	18	19
Subarea Name or Tag	Building Plan Reference	Roof or Overhang Slope (Low ≤ 2:12 pitch) (Steep > 2:12 pitch)	Is Steep-Sloped Roof or Overhang between 90 and 300 degrees?	Subarea Complies with Title 24, Part 9	Solar Zone Subarea Free of Obstructions per §110.10(b)3A	Subarea is Required Distance from Potential Obstructions per §110.10(b)3B	Is the Smallest Dimension 5 feet or greater?	Min. Area Required per Subarea (ft²)	Designated Area (ft²)	Subarea Complies?
	A2.07	Low-Sloped		Yes	Yes	Yes	Yes	160	4,531	COMPLIES
								Total Designated Solar Zone Area (ft²):	4,531	
									Add Subarea	Remove Last

Interconnection Pathways

Location in construction documents showing the location for inverters and metering equipment and a pathway for the routing of conduit/ plumbing to the electrical service/ water heating system per §110.10(c).	E3.01, E5.02

¹*FOOTNOTE: This field is used to document how the percentage of annual solar access was determined per §110.10(b)1B. Solar access is the ratio of solar insolation including shade to the solar insolation without shade. Shading from obstructions located on the roof or any other part of the building shall not be included in the determination of annual solar access.*

G. PERMANENTLY INSTALLED SOLAR PHOTOVOLTAIC (PV) SYSTEM

This Section Does Not Apply

H. PERMANENTLY INSTALLED SOLAR HOT WATER SYSTEM

This Section Does Not Apply

I. SMART THERMOSTATS AND ALTERNATIVE EFFICIENCY MEASURE

This Section Does Not Apply

STATE OF CALIFORNIA
Solar Ready Areas
NRCC-SRA-E (Created 11/19) CALIFORNIA ENERGY COMMISSION

CERTIFICATE OF COMPLIANCE		NRCC-SRA-E
Project Name: 2700 International Boulevard	Report Page:	Page 4 of 5
Project Address: 2700 International Blvd., Oakland, CA 94601	Date Prepared:	12/1/2022

J. DECLARATION OF REQUIRED CERTIFICATES OF INSTALLATION

Table Instructions: Selections have been made based on information provided in previous tables of this document. If any selection needs to be changed, please explain why in Table E. Additional Remarks. These documents must be provided to the building inspector during construction and can be found online at https://www.energy.ca.gov/title24/2019standards/2019_compliance_documents/Nonresidential_Documents/NRCI/

YES	NO	Form/Title	Field Inspector Pass	Field Inspector Fail
○	◉	NRCI-SPV-01-E - Must be submitted for all newly installed Photovoltaic Systems (PV) being used to comply with §110.10(b)1B for high-rise multifamily, Hotel/Motel buildings less than 10 stories and nonresidential buildings less than 4 stories.	☐	☐
○	◉	NRCI-STH-01-E - Must be submitted for all newly installed Solar Water Heating systems being used to comply with §110.10(b)1B for high-rise multifamily, Hotel/Motel buildings less than 10 stories and nonresidential buildings less than 4 stories.	☐	☐

K. DECLARATION OF REQUIRED CERTIFICATES OF ACCEPTANCE

There are no Certificates of Acceptance applicable to solar ready requirements.

STATE OF CALIFORNIA
Solar Ready Areas
NRCC-SRA-E (Created 11/19) CALIFORNIA ENERGY COMMISSION

CERTIFICATE OF COMPLIANCE		NRCC-SRA-E
Project Name: 2700 International Boulevard	Report Page:	Page 5 of 5
Project Address: 2700 International Blvd., Oakland, CA 94601	Date Prepared:	12/1/2022

DOCUMENTATION AUTHOR'S DECLARATION STATEMENT

I certify that this Certificate of Compliance documentation is accurate and complete

Documentation Author Name:	Sam Postel	Documentation Author Signature:	Digitally signed by Sam Postel Date: 2022.12.01 15:36:01 -08'00'
Company:	PYATOK	Signature Date:	12/1/2022
Address:	1611 Telegraph Ave. Suite 200	CEA/ HERS Certification Identification (if applicable):	
City/State/Zip:	Oakland, CA 94612	Phone:	(510) 465-7010

RESPONSIBLE PERSON'S DECLARATION STATEMENT

I certify the following under penalty of perjury, under the laws of the State of California:

1. **The information provided on this Certificate of Compliance is true and correct.**
2. **I am eligible under Division 3 of the Business and Professions Code to accept responsibility for the building design or system design identified on this Certificate of Compliance (responsible designer)**
3. **The energy features and performance specifications, materials, components, and manufactured devices for the building design or system design identified on this Certificate of Compliance conform to the requirements of Title 24, Part 1 and Part 6 of the California Code of Regulations.**
4. **The building design features or system design features identified on this Certificate of Compliance are consistent with the information provided on other applicable compliance documents, worksheets, calculations, plans and specifications submitted to the enforcement agency for approval with this building permit application.**
5. **I will ensure that a completed signed copy of this Certificate of Compliance shall be made available with the building permit(s) issued for the building, and made available to the enforcement agency for all applicable inspections. I understand that a completed signed copy of this Certificate of Compliance is required to be included with the documentation the builder provides to the building owner at occupancy.**

Responsible Designer Name:	Peter Waller	Responsible Designer Signature:	
Company :	PYATOK	Date Signed:	12/02/2022
Address:	1611 Telegraph Ave. Suite 200	License:	C-23551
City/State/Zip:	Oakland, CA 94612	Phone:	(510) 465-7010

SOLAR READY AREAS (2)
NTS

GreenPointRATED

NEW HOME RATING SYSTEM, VERSION 8.2

Blueprint Scoresheet

Points Targeted: 151.6
Certification Level Targeted: Platinum
Compliance Pathway Targeted: Option 2: All Electric Compliance
T24 Compliance Targeted: 21 %

2700 International		Points Targeted	Community	Energy	IAQ/Health	Resources	Water	Responsible Party	Blueprint Page No.
			Possible Points						
CALGreen									
Yes	CALGreen (REQUIRED)	4		1	1	1	1		
A. SITE									
	A2. Job Site Construction Waste Diversion								
Yes	A2.1 70% C&D Waste Diversion (Including Alternative Daily Cover)	2				2		GC	
Yes	A4. Heat Island Effect Reduction (Non-Roof)	1		1				Civil, Land, Arch	L1.00, G0.00, L2.04
B. FOUNDATION									
Yes	B1. Fly Ash and/or Slag in Concrete	1				1		Civil, Struc, Land, Mech, GC	S1.00
C. LANDSCAPE									
0.38%	Enter the landscape area percentage. Points capped at 3 for less than 15%.								
	C3. Resource Efficient Landscapes								
Yes	C3.2 Plants Chosen and Located to Grow to Natural Size	1				1		Land	
	C4. Minimal Turf in Landscape								
Yes	C4.1 No Turf on Slopes Exceeding 10% and No Overhead Sprinklers Installed in Areas Less Than Eight Feet Wide	2					2	Land	
Yes	C10. Submeter or Dedicated Meter for Landscape Irrigation	0					2	Land	BOD (3)
Yes	C13. Reduced Light Pollution	1	1					Land, Elec	E0.01, E2.02, A2.02
Yes	C14. Large Stature Tree(s)	1	1					Land	L4.00
D. STRUCTURAL FRAME AND BUILDING ENVELOPE									
	D1. Optimal Value Engineering								
Yes	D1.2 Non-Load Bearing Door and Window Headers Sized for Load	1				1		Struc	S8.01
Yes	D2. Construction Material Efficiencies	1				1		GC	
	D9. Reduced Pollution Entering the Home from the Garage								
Yes	D9.2 Mitigation Strategies for Attached Garage	1			1			Arch, GC	BOD, M0.00, M2.01, E2.01
	D10. Structural Pest and Rot Controls								
Yes	D10.1 All Wood Located At Least 12 Inches Above the Soil	1				1		Arch	BOD
Yes	D10.2 Wood Framing Treated With Borates or Factory-Impregnated, or Wall Materials Other Than Wood	1				1		Arch	BOD
E. EXTERIOR									
Yes	E2. Flashing Installation Third-Party Verified	2				2		Owner	
Yes	E4. Durable and Non-Combustible Cladding Materials	1				1		Arch	A3.00
	E5. Durable Roofing Materials								
Yes	E5.1 Durable and Fire Resistant Roofing Materials or Assembly	1				1		Arch, GC	BOD, Specs 07 54 19, S2.07
N/A	E5.2 Roofing Warranty for Shingle Roofing	Y	R	R	R	R	R	Arch, GC	
F. INSULATION									
	F1. Insulation with 30% Post-Consumer or 60% Post-Industrial Recycled Content								
Yes	F1.1 Walls and Floors	0.5				0.5			
Yes	F1.2 Ceilings	0.5				0.5			
	F2. Insulation that Meets the CDPH Standard Method—Residential for Low Emissions								
Yes	F2.1 Walls and Floors	0.5			0.5				
Yes	F2.2 Ceilings	0.5			0.5				
	F3. Insulation That Does Not Contain Fire Retardants								
Yes	F3.1 Cavity Walls and Floors	1			1				
Yes	F3.2 Ceilings	1			1				
G. PLUMBING									
	G2. Install Water-Efficient Fixtures								
Yes	G2.1 WaterSense Showerheads ≤ 1.8 gpm with Matching Compensation Valve	2					2	Plumb.	P0.01
Yes	G2.1 WaterSense Bathroom Facuets ≤ 1.0 gpm	1					1	Plumb.	P0.01
1.1 gpf	G2.3 WaterSense Toilets with a Maximum Performance (MaP) Threshold of No Less Than 500 Grams ≤ 1.28 gpf OR ≤ 1.1 gpf	2					2	Plumb.	P0.01
H. HEATING, VENTILATION, AND AIR CONDITIONING									
	H1. Sealed Combustion Units								
Yes	H1.1 Sealed Combustion Furnace	1			1			Mech	
Yes	H1.2 Sealed Combustion Water Heater	2			2			Plumb	P0.01, BOD (3)
	H4. ENERGY STAR® Bathroom Fans								
Yes	H4.1 ENERGY STAR® Bathroom Fans Per HVI Standards	1			1			Mech	M0.01
	H6. Whole House Mechanical Ventilation Practices to Improve Indoor Air Quality							Mech	
Yes	H6.1 Meet ASHRAE Standard 62.2-2016 Ventilation Residential Standards	Y	R	R	R	R	R	Mech	M0.01, M3.00+
I. RENEWABLE ENERGY									
≥60% of common area	I5. Photovoltaic System for Multifamily Projects	4		8				Owner, Elec.	A.207, E3.02
J. BUILDING PERFORMANCE AND TESTING									
Yes	J3. Mechanical Ventilation Testing and Low Leakage	1			1			HERS, Mech, GC	M0.01
Yes	J4. All Electric or Combustion Appliance Safety Testing	1			1			Owner	
	J5. Building Energy Performance								
Option 2: All Electric Compliance	J5.1 Home Outperforms Title 24	66.60238		25+				BE	
Yes	J6. Title 24 Prepared and Signed by a CABEC Certified Energy Analyst	1		1				Energy	
K. FINISHES									
	K1. Entryways Designed to Reduce Tracked-In Contaminants								
Yes	K1.2 Entryways to Buildiings	1			1			Arch	A5.00
L. FLOORING									
≥75%	L2. Low-Emitting Flooring Meets CDPH 2010 Standard Method—Residential	3			3			Arch	Specs 09 65 00
Yes	L3. Durable Flooring	1				1		Arch	Specs 09 65 00
M. APPLIANCES AND LIGHTING									
Yes	M1. ENERGY STAR® Dishwasher	1					1	Arch	A4.01-.03
	M2. Efficient Clothes Washing and Drying								
Comm	M2.1. CEE-Rated Clothes Washer	2		1			2	Owner	A2.02, A5.05
<20 cubic feet	M3. Size-Efficient ENERGY STAR® Refrigerator	2		2				Arch	
Yes	M7. Central Laundry	1					1	Arch	A2.02
Yes	M8. Gearless Elevator	1		1				Arch	
N. COMMUNITY									
	N1. Smart Development								
Yes	N1.1 Infill Site	2	1			1		Owner	
>35	N1.3 Conserve Resources by Increasing Density	4		2		2		Arch	G0.00
	N1.5 Home Size Efficiency	6				10		Arch	
887	Enter the area of the home, in square feet								
2	Enter the number of bedrooms								
	N2. Home(s)/Development Located Near Transit								
Yes	N2.2. Within 1/2 mile of a Major Transit Stop	2	2					Owner	
	N3. Pedestrian and Bicycle Access								
	N3.1 Pedestrian Access to Services Within 1/2 Mile of Community Services	2	2					Owner	
8	Enter the number of Tier 1 services								
4	Enter the number of Tier 2 services								
Yes	N3.4 Sidewalks Buffered from Roadways and 5-8 Feet Wide	1	1					Civil, Land.	
Yes	N3.5 Bicycle Storage for Residents	1	1					Arch	G0.00 (100DD)
1 space per unit	N3.7 Reduced Parking Capacity	2	2					Owner, Arch	A.201, G0.00
	N4. Outdoor Gathering Places								
Yes	N4.1 Public or Semi-Public Outdoor Gathering Places for Residents	1	1					Arch	G0.00
	N7. Adaptable Building								
Yes	N7.1 Universal Design Principles in Units	2	1		1			Arch	A4.01+
	N10. Affordability								
≥50%	N10.1 Dedicated Units for Households Making 80% of AMI or Less	2	2					Owner	
O. OTHER									
Yes	O1. GreenPoint Rated Checklist in Blueprints	Y	R	R	R	R	R	Arch	
Yes	O2. Pre-Construction Kickoff Meeting with Rater and Subcontractors	2		0.5		1	0.5	Arch	
	O6. Green Building Education								
Yes	O6.2 Green Building Signage	1		0.5			0.5	Owner	
Yes	O7. Green Appraisal Addendum	Y	R	R	R	R	R	Owner	
Yes	O10. Vandalism Deterrence Practices and Vandalism Management Plan	1	1					Owner	
Yes	O11. Smokefree Housing	2			2			Owner, Arch	
Summary			Community	Energy	IAQ/Health	Resources	Water		
	Total Available Points in Specific Categories	404.5	47	135.5	73	91	58		
	Minimum Points Required in Specific Categories	50	2	25	6	6	6		
	Total Points Targeted	151.6	[illegible]	80.602	[illegible]	23	[illegible]		

GREEN POINT RATED CHECKLIST (1)
NTS

PYATOK
1611 TELEGRAPH AVE.
SUITE 200
OAKLAND, CA 94612
T. 510.465.7010 | F. 510.465.8575
www.pyatok.com

THE UNITY COUNCIL
1900 FRUITVALE AVE
#2A
OAKLAND, CA 94601

2700 INTERNATIONAL
OAKLAND, CA 94601

STAMP:
LICENSED ARCHITECT
PETER WALLER
C-23551
RENEWAL DATE 4/30/2023
STATE OF CALIFORNIA

ISSUE SCHEDULE

100 SD	5/11/22
50 DD	7/15/22
100 DD	9/16/22
50 CD	11/18/22
PERMIT SET	12/09/22

REVISION SCHEDULE

NO.	ISSUE	DATE

JOB NUMBER:	1937
DRAWN BY:	MA, DV, TN, MO, SP
CHECKED BY:	Checker
ISSUE DATE:	12/09/22
SCALE:	As indicated

TITLE:
SUSTAINABILITY

SHEET:
G0.50

PRELIMINARY - Not for Construction -

© 2019 PYATOK ARCHITECTURE & URBAN DESIGN

AIA California

2019 CALIFORNIA GREEN BUILDING STANDARDS CODE

RESIDENTIAL MANDATORY MEASURES, SHEET 1 (January 2020, Includes August 2019 Supplement)

Y = YES
N/A = NOT APPLICABLE
RESPON. PARTY = RESPONSIBLE PARTY (ie: ARCHITECT, ENGINEER, OWNER, CONTRACTOR, INSPECTOR ETC.)

Y	N/A	RESPON. PARTY

CHAPTER 3
GREEN BUILDING
SECTION 301 GENERAL

301.1 SCOPE. Buildings shall be designed to include the green building measures specified as mandatory in the application checklists contained in this code. Voluntary green building measures are also included in the application checklists and may be included in the design and construction of structures covered by this code, but are not required unless adopted by a city, county, or city and county as specified in Section 101.7.

301.1.1 Additions and alterations. [HCD] The mandatory provisions of Chapter 4 shall be applied to additions or alterations of existing residential buildings where the addition or alteration increases the building's conditioned area, volume, or size. The requirements shall apply only to and/or within the specific area of the addition or alteration.

Note: On and after January 1, 2014, residential buildings undergoing permitted alterations, additions, or improvements shall replace noncompliant plumbing fixtures with water-conserving plumbing fixtures. Plumbing fixture replacement is required prior to issuance of a certificate of final completion, certificate of occupancy or final permit approval by the local building department. See Civil Code Section 1101.1, et seq., for the definition of a noncompliant plumbing fixture, types of residential buildings affected and other important enactment dates.

301.2 LOW-RISE AND HIGH-RISE RESIDENTIAL BUILDINGS. [HCD] The provisions of individual sections of CALGreen may apply to either low-rise residential buildings high-rise residential buildings, or both. Individual sections will be designated by banners to indicate where the section applies specifically to low-rise only (LR) or high-rise only (HR). When the section applies to both low-rise and high-rise buildings, no banner will be used.

SECTION 302 MIXED OCCUPANCY BUILDINGS

302.1 MIXED OCCUPANCY BUILDINGS. In *mixed occupancy* buildings, each portion of a building shall comply with the specific green building measures applicable to each specific occupancy.

ABBREVIATION DEFINITIONS:

HCD	Department of Housing and Community Development
BSC	California Building Standards Commission
DSA-SS	Division of the State Architect, Structural Safety
OSHPD	Office of Statewide Health Planning and Development
LR	Low Rise
HR	High Rise
AA	Additions and Alterations
N	New

CHAPTER 4
RESIDENTIAL MANDATORY MEASURES
DIVISION 4.1 PLANNING AND DESIGN
SECTION 4.102 DEFINITIONS

4.102.1 DEFINITIONS
The following terms are defined in Chapter 2 *(and are included here for reference)*

FRENCH DRAIN. A trench, hole or other depressed area loosely filled with rock, gravel, fragments of brick or similar pervious material used to collect or channel drainage or runoff water.

WATTLES. Wattles are used to reduce sediment in runoff. Wattles are often constructed of natural plant materials such as hay, straw or similar material shaped in the form of tubes and placed on a downflow slope. Wattles are also used for perimeter and inlet controls.

4.106 SITE DEVELOPMENT

4.106.1 GENERAL. Preservation and use of available natural resources shall be accomplished through evaluation and careful planning to minimize negative effects on the site and adjacent areas. Preservation of slopes, management of storm water drainage and erosion controls shall comply with this section.

Y	N/A	RESPON. PARTY
☑	☐	GC, Civil

4.106.2 STORM WATER DRAINAGE AND RETENTION DURING CONSTRUCTION. Projects which disturb less than one acre of soil and are not part of a larger common plan of development which in total disturbs one acre or more, shall manage storm water drainage during construction. In order to manage storm water drainage during construction, one or more of the following measures shall be implemented to prevent flooding of adjacent property, prevent erosion and retain soil runoff on the site.

1. Retention basins of sufficient size shall be utilized to retain storm water on the site.
2. Where storm water is conveyed to a public drainage system, collection point, gutter or similar disposal method, water shall be filtered by use of a barrier system, wattle or other method approved by the enforcing agency.
3. Compliance with a lawfully enacted storm water management ordinance.

Note: Refer to the State Water Resources Control Board for projects which disturb one acre or more of soil, or are part of a larger common plan of development which in total disturbs one acre or more of soil.

(Website: https://www.waterboards.ca.gov/water_issues/programs/stormwater/construction.html)

Y	N/A	RESPON. PARTY
☑	☐	GC, Civil

4.106.3 GRADING AND PAVING. Construction plans shall indicate how the site grading or drainage system will manage all surface water flows to keep water from entering buildings. Examples of methods to manage surface water include, but are not limited to, the following:

1. Swales
2. Water collection and disposal systems
3. French drains
4. Water retention gardens
5. Other water measures which keep surface water away from buildings and aid in groundwater recharge.

Exception: Additions and alterations not altering the drainage path.

Y	N/A	RESPON. PARTY
☑	☐	Electrical

4.106.4 Electric vehicle (EV) charging for new construction. New construction shall comply with Sections 4.106.4.1, 4.106.4.2, or 4.106.4.3 to facilitate future installation and use of EV chargers. Electric vehicle supply equipment (EVSE) shall be installed in accordance with the *California Electrical Code,* Article 625.

Exceptions:
1. On a case-by-case basis, where the local enforcing agency has determined EV charging and infrastructure are not feasible based upon one or more of the following conditions:
   1.1 Where there is no commercial power supply.
   1.2 Where there is evidence substantiating that meeting the requirements will alter the local utility infrastructure design requirements on the utility side of the meter so as to increase the utility side cost to the homeowner or the developer by more than $400.00 per dwelling unit.
2. Accessory Dwelling Units (ADU) and Junior Accessory Dwelling Units (JADU) without additional parking facilities.

Y	N/A	RESPON. PARTY
☐	☒	☐

4.106.4.1 New one- and two-family dwellings and townhouses with attached private garages. For each dwelling unit, install a listed raceway to accommodate a dedicated 208/240-volt branch circuit. The raceway shall not be less than trade size 1 (nominal 1-inch inside diameter). The raceway shall originate at the main service or subpanel and shall terminate into a listed cabinet, box or other enclosure in close proximity to the proposed location of an EV charger. Raceways are required to be continuous at enclosed, inaccessible or concealed areas and spaces. The service panel and/or subpanel shall provide capacity to install a 40-ampere minimum dedicated branch circuit and space(s) reserved to permit installation of a branch circuit overcurrent protective device.

4.106.4.1.1 Identification. The service panel or subpanel circuit directory shall identify the overcurrent protective device space(s) reserved for fute EV charging as "EV CAPABLE". The raceway termination location shall be permanently and visibly marked as "EV CAPABLE".

Y	N/A	RESPON. PARTY
☑	☐	☑
		Electrical, Architect

4.106.4.2 New multifamily dwellings. If residential parking is available, ten (10) percent of the total number of parking spaces on a building site, provided for all types of parking facilities, shall be electric vehicle charging spaces (EV spaces) capable of supporting future EVSE. Calculations for the required number of EV spaces shall be rounded up to the nearest whole number.

Notes:
1. Construction documents are intended to demonstrate the project's capability and capacity for facilitating future EV charging.
2. There is no requirement for EV spaces to be constructed or available until EV chargers are installed for use.

4.106.4.2.1 Electric vehicle charging space (EV space) locations. Construction documents shall indicate the location of proposed EV spaces. Where common use parking is provided at least one EV space shall be located in the common use parking area and shall be available for use by all residents.

Y	N/A	RESPON. PARTY
☑	☐	Architect
☐	☒	
☑	☐	Electrical
☑	☐	Electrical
☐	☒	

4.106.4.2.1 Electric Vehicle Charging Stations (EVCS) When EV chargers are installed, EV spaces required by Section 4.106.2.2, Item 3, shall comply with at least one of the following options:

1. The EV space shall be located adjacent to an accessible parking space meeting the requirements of the *California Building Code,* Chapter 11A, to allow use of the EV charger from the accessible parking space.
2. The EV space shall be located on an accessible route, as defined in the *California Building Code,* Chapter 2, to the building.

Exception: Electric vehicle charging stations designed and constructed in compliance with the *California Building Code*, Chapter 11B, are not required to comply with Section 4.106.4.2.1.1 and Section 4.106.4.2.2, Item 3.

Note: Electric Vehicle charging stations serving public housing are required to comply with the *California Building Code,* Chapter 11B.

4.106.4.2.2 Electric vehicle charging space (EV space) dimensions. The EV space shall be designed to comply with the following:

1. The minimum length of each EV space shall be 18 feet (5486 mm).
2. The minimum width of each EV space shall be 9 feet (2743 mm).
3. One in every 25 EV spaces, but not less than one EV space, shall have an 8-foot (2438 mm) wide minimum aisle. A 5-foot (1524 mm) wide minimum aisle shall be permitted provided the minimum width of the EV space is 12 feet (3658 mm).
   a. Surface slope for this EV space and the aisle shall not exceed 1 unit vertical in 48 units horizontal (2.083 percent slope) in any direction.

4.106.4.2.3 Single EV space required. Install a listed raceway capable of accommodating a 208/240-volt dedicated branch circuit. The raceway shall not be less than trade size 1 (nominal 1-inch inside diameter). The raceway shall originate at the main service or subpanel and shall terminate into a listed cabinet, box or enclosure in close proximity to the proposed location of the EV space. Construction documents shall identify the raceway termination point. The service panel and/or subpanel shall provide capacity to install a 40-ampere minimum dedicated branch circuit and space(s) reserved to permit installation of a branch circuit overcurrent protective device.

4.106.4.2.4 Multiple EV spaces required. Construction documents shall indicate the raceway termination point and proposed location of future EV spaces and EV chargers. Construction documents shall also provide information on amperage of future EVSE, raceway method(s), wiring schematics and electrical load calculations to verify that the electrical panel service capacity and electrical system, including any on-site distribution transformer(s), have sufficient capacity to simultaneously charge all EVs at all required EV spaces at the full rated amperage of the EVSE. Plan design shall be based upon a 40-ampere minimum branch circuit. Required raceways and related components that are planned to be installed underground, enclosed, inaccessible or in concealed areas and spaces shall be installed at the time of original construction.

Y	N/A	RESPON. PARTY
☑	☐	Electrical

4.106.4.2.5 Identification. The service panel or subpanel circuit directory shall identify the overcurrent protective device space(s) reserved for future EV charging purposes as "EV CAPABLE" in accordance with the *California Electrical Code.*

Y	N/A	RESPON. PARTY
☐	☒	

4.106.4.3 New hotels and motels. All newly constructed hotels and motels shall provide EV spaces capable of supporting future installation of EVSE. The construction documents shall identify the location of the EV spaces.

Notes:

1. Construction documents are intended to demonstrate the project's capability and capacity or facilitating future EV charging.
2. There is no requirement for EV spaces to be constructed or available until EV chargers are installed for use.

4.106.4.3.1 Number of required EV spaces. The number of required EV spaces shall be based on the total number of parking spaces provided for all types of parking facilities in accordance with Table 4.106.4.3.1. Calculations for the required number of EV spaces shall be rounded up to the nearest whole number.

TABLE 4.106.4.3.1

TOTAL NUMBER OF PARKING SPACES	NUMBER OF REQUIRED EV SPACES
0-9	0
10-25	1
26-50	2
51-75	4
76-100	5
101-150	7
151-200	10
201 and over	6 percent of total

4.106.4.3.2 Electric vehicle charging space (EV space) dimensions. The EV spaces shall be designed to comply with the following:

1. The minimum length of each EV space shall be 18 feet (5486mm).
2. The minimum width of each EV space shall be 9 feet (2743mm)

4.106.4.3.3 Single EV space required. When a single EV space is required, the EV space shall be designed in accordance with Section 4.106.4.2.3.

4.106.4.3.4 Multiple EV spaces required. When multiple EV spaces are required, the EV spaces shall be designed in accordance with Section 4.106.4.2.4.

4.106.4.3.5 Identification. The service panels or sub-panels shall be identified in accordance with Section 4.106.4.2.5.

4.106.4.3.6 Accessible EV spaces. In addition to the requirements in Section 4.106.4.3, EV spaces for hotels/motels and all EVSE, when installed, shall comply with the accessibility provisions for the EV charging stations in the *California Building Code*, Chapter 11B.

DIVISION 4.2 ENERGY EFFICIENCY
4.201 GENERAL

4.201.1 SCOPE. For the purposes of mandatory energy efficiency standards in this code, the California Energy Commission will continue to adopt mandatory standards.

Y	N/A	RESPON. PARTY
☑	☐	Plumbing
☑	☐	Plumbing
☐	☒	
☑	☐	Plumbing
☑	☐	Plumbing
☑	☐	Landscape

DIVISION 4.3 WATER EFFICIENCY AND CONSERVATION
4.303 INDOOR WATER USE

4.303.1 WATER CONSERVING PLUMBING FIXTURES AND FITTINGS. Plumbing fixtures (water closets and urinals) and fittings (faucets and showerheads) shall comply with the sections 4.303.1.1, 4.303.1.2, 4.303.1.3, and 4.303.4.4.

Note: All noncompliant plumbing fixtures in any residential real property shall be replaced with water-conserving plumbing fixtures. Plumbing fixture replacement is required prior to issuance of a certificate of final completion, certificate of occupancy, or final permit approval by the local building department. See Civil Code Section 1101.1, et seq., for the definition of a noncompliant plumbing fixture, types of residential buildings affected and other important enactment dates.

4.303.1.1 Water Closets. The effective flush volume of all water closets shall not exceed 1.28 gallons per flush. Tank-type water closets shall be certified to the performance criteria of the U.S. EPA WaterSense Specification for Tank-type Toilets.

Note: The effective flush volume of dual flush toilets is defined as the composite, average flush volume of two reduced flushes and one full flush.

4.303.1.2 Urinals. The effective flush volume of wall mounted urinals shall not exceed 0.125 gallons per flush. The effective flush volume of all other urinals shall not exceed 0.5 gallons per flush.

4.303.1.3 Showerheads.

4.303.1.3.1 Single Showerhead. Showerheads shall have a maximum flow rate of not more than 1.8 gallons per minute at 80 psi. Showerheads shall be certified to the performance criteria of the U.S. EPA WaterSense Specification for Showerheads.

4.303.1.3.2 Multiple showerheads serving one shower. When a shower is served by more than one showerhead, the combined flow rate of all the showerheads and/or other shower outlets controlled by a single valve shall not exceed 1.8 gallons per minute at 80 psi, or the shower shall be designed to only allow one shower outlet to be in operation at a time.

Note: A hand-held shower shall be considered a showerhead.

4.303.1.4 Faucets.

4.303.1.4.1 Residential Lavatory Faucets. The maximum flow rate of residential lavatory faucets shall not exceed 1.2 gallons per minute at 60 psi. The minimum flow rate of residential lavatory faucets shall not be less than 0.8 gallons per minute at 20 psi.

4.303.1.4.2 Lavatory Faucets in Common and Public Use Areas. The maximum flow rate of lavatory faucets installed in common and public use areas (outside of dwellings or sleeping units) in residential buildings shall not exceed 0.5 gallons per minute at 60 psi.

4.303.1.4.3 Metering Faucets. Metering faucets when installed in residential buildings shall not deliver more than 0.2 gallons per cycle.

4.303.1.4.4 Kitchen Faucets. The maximum flow rate of kitchen faucets shall not exceed 1.8 gallons per minute at 60 psi. Kitchen faucets may temporarily increase the flow above the maximum rate, but not to exceed 2.2 gallons per minute at 60 psi, and must default to a maximum flow rate of 1.8 gallons per minute at 60 psi.

Note: Where complying faucets are unavailable, aerators or other means may be used to achieve reduction.

4.303.2 STANDARDS FOR PLUMBING FIXTURES AND FITTINGS. Plumbing fixtures and fittings shall be installed in accordance with the *California Plumbing Code*, and shall meet the applicable standards referenced in Table 1701.1 of the *California Plumbing Code*.

NOTE:
THIS TABLE COMPILES THE DATA IN SECTION 4.303.1, AND
IS INCLUDED AS A CONVENIENCE FOR THE USER.

TABLE - MAXIMUM FIXTURE WATER USE

FIXTURE TYPE	FLOW RATE
SHOWER HEADS (RESIDENTIAL)	1.8 GMP @ 80 PSI
LAVATORY FAUCETS (RESIDENTIAL)	MAX. 1.2 GPM @ 60 PSI MIN. 0.8 GPM @ 20 PSI
LAVATORY FAUCETS IN COMMON & PUBLIC USE AREAS	0.5 GPM @ 60 PSI
KITCHEN FAUCETS	1.8 GPM @ 60 PSI
METERING FAUCETS	0.2 GAL/CYCLE
WATER CLOSET	1.28 GAL/FLUSH
URINALS	0.125 GAL/FLUSH

4.304 OUTDOOR WATER USE

4.304.1 OUTDOOR POTABLE WATER USE IN LANDSCAPE AREAS. Residential developments shall comply with a local water efficient landscape ordinance or the current California Department of Water Resources' Model Water Efficient Landscape Ordinance (MWELO), whichever is more stringent.

NOTES:

1. The Model Water Efficient Landscape Ordinance (MWELO) is located in the *California Code Regulations,* Title 23, Chapter 2.7, Division 2. MWELO and supporting documents, including water budget calculator, are available at: https://www.water.ca.gov/

Y	N/A	RESPON. PARTY
☑	☐	GC
☑	☐	GC
☑	☐	GC
☑	☐	GC
☐	☒	
☑	☐	GC
☑	☐	GC, Owner
☑	☐	Architect

DIVISION 4.4 MATERIAL CONSERVATION AND RESOURCE EFFICIENCY
4.406 ENHANCED DURABILITY AND REDUCED MAINTENANCE

4.406.1 RODENT PROOFING. Annular spaces around pipes, electric cables, conduits or other openings in sole/bottom plates at exterior walls shall be protected against the passage of rodents by closing such openings with cement mortar, concrete masonry or a similar method acceptable to the enforcing agency.

4.408 CONSTRUCTION WASTE REDUCTION, DISPOSAL AND RECYCLING

4.408.1 CONSTRUCTION WASTE MANAGEMENT. Recycle and/or salvage for reuse a minimum of 65 percent of the non-hazardous construction and demolition waste in accordance with either Section 4.408.2, 4.408.3 or 4.408.4, or meet a more stringent local construction and demolition waste management ordinance.

Exceptions:

1. Excavated soil and land-clearing debris.
2. Alternate waste reduction methods developed by working with local agencies if diversion or recycle facilities capable of compliance with this item do not exist or are not located reasonably close to the jobsite.
3. The enforcing agency may make exceptions to the requirements of this section when isolated jobsites are located in areas beyond the haul boundaries of the diversion facility.

4.408.2 CONSTRUCTION WASTE MANAGEMENT PLAN. Submit a construction waste management plan in conformance with Items 1 through 5. The construction waste management plan shall be updated as necessary and shall be available during construction for examination by the enforcing agency.

1. Identify the construction and demolition waste materials to be diverted from disposal by recycling, reuse on the project or salvage for future use or sale.
2. Specify if construction and demolition waste materials will be sorted on-site (source separated) or bulk mixed (single stream).
3. Identify diversion facilities where the construction and demolition waste material collected will be taken.
4. Identify construction methods employed to reduce the amount of construction and demolition waste generated.
5. Specify that the amount of construction and demolition waste materials diverted shall be calculated by weight or volume, but not by both.

4.408.3 WASTE MANAGEMENT COMPANY. Utilize a waste management company, approved by the enforcing agency, which can provide verifiable documentation that the percentage of construction and demolition waste material diverted from the landfill complies with Section 4.408.1.

Note: The owner or contractor may make the determination if the construction and demolition waste materials will be diverted by a waste management company.

4.408.4 WASTE STREAM REDUCTION ALTERNATIVE [LR]. Projects that generate a total combined weight of construction and demolition waste disposed of in landfills, which do not exceed 3.4 lbs./sq.ft. of the building area shall meet the minimum 65% construction waste reduction requirement in Section 4.408.1

4.408.4.1 WASTE STREAM REDUCTION ALTERNATIVE. Projects that generate a total combined weight of construction and demolition waste disposed of in landfills, which do not exceed 2 pounds per square foot of the building area, shall meet the minimum 65% construction waste reduction requirement in Section 4.408.1

4.408.5 DOCUMENTATION. Documentation shall be provided to the enforcing agency which demonstrates compliance with Section 4.408.2, items 1 through 5, Section 4.408.3 or Section 4.408.4..

Notes:

1. Sample forms found in "A Guide to the California Green Building Standards Code (Residential)" located at www.hcd.ca.gov/CALGreen.html may be used to assist in documenting compliance with this section.
2. Mixed construction and demolition debris (C & D) processors can be located at the California Department of Resources Recycling and Recovery (CalRecycle).

4.410 BUILDING MAINTENANCE AND OPERATION

4.410.1 OPERATION AND MAINTENANCE MANUAL. At the time of final inspection, a manual, compact disc, web-based reference or other media acceptable to the enforcing agency which includes all of the following shall be placed in the building:

1. Directions to the owner or occupant that the manual shall remain with the building throughout the life cycle of the structure.
2. Operation and maintenance instructions for the following:
   a. Equipment and appliances, including water-saving devices and systems, HVAC systems, photovoltaic systems, electric vehicle chargers, water-heating systems and other major appliances and equipment.
   b. Roof and yard drainage, including gutters and downspouts.
   c. Space conditioning systems, including condensers and air filters.
   d. Landscape irrigation systems.
   e. Water reuse systems.
3. Information from local utility, water and waste recovery providers on methods to further reduce resource consumption, including recycle programs and locations.
4. Public transportation and/or carpool options available in the area.
5. Educational material on the positive impacts of an interior relative humidity between 30-60 percent and what methods an occupant may use to maintain the relative humidity level in that range.
6. Information about water-conserving landscape and irrigation design and controllers which conserve water.
7. Instructions for maintaining gutters and downspouts and the importance of diverting water at least 5 feet away from the foundation.
8. Information on required routine maintenance measures, including, but not limited to, caulking, painting, grading around the building, etc.
9. Information about state solar energy and incentive programs available.
10. A copy of all special inspections verifications required by the enforcing agency or this code.

4.410.2 RECYCLING BY OCCUPANTS. Where 5 or more multifamily dwelling units are constructed on a building site, provide readily accessible area(s) that serves all buildings on the site and are identified for the depositing, storage and collection of non-hazardous materials for recycling, including (at a minimum) paper, corrugated cardboard, glass, plastics, organic waster, and metals, or meet a lawfully enacted local recycling ordinance, if more restrictive.

Exception: Rural jurisdictions that meet and apply for the exemption in Public Resources Code Section 42649.82 (a)(2)(A) et seq. are note required to comply with the organic waste portion of this section.

DIVISION 4.5 ENVIRONMENTAL QUALITY
SECTION 4.501 GENERAL

4.501.1 Scope
The provisions of this chapter shall outline means of reducing the quality of air contaminants that are odorous, irritating and/or harmful to the comfort and well being of a building's installers, occupants and neighbors.

SECTION 4.502 DEFINITIONS

5.102.1 DEFINITIONS
The following terms are defined in Chapter 2 *(and are included here for reference)*

AGRIFIBER PRODUCTS. Agrifiber products include wheatboard, strawboard, panel substrates and door cores, not including furniture, fixtures and equipment (FF&E) not considered base building elements.

COMPOSITE WOOD PRODUCTS. Composite wood products include hardwood plywood, particleboard and medium density fiberboard. "Composite wood products" does not include hardboard, structural plywood, structural panels, structural composite lumber, oriented strand board, glued laminated timber, prefabricated wood I-joists or finger-jointed lumber, all as specified in California Code of regulations (CCR), title 17, Section 93120.1.

DIRECT-VENT APPLIANCE. A fuel-burning appliance with a sealed combustion system that draws all air for combustion from the outside atmosphere and discharges all flue gases to the outside atmosphere.

PYATOK
1611 TELEGRAPH AVE.
SUITE 200
OAKLAND, CA 94612
T. 510.465.7010 | F. 510.465.8575
www.pyatok.com

THE UNITY COUNCIL
1900 FRUITVALE AVE
#2A
OAKLAND, CA 94601

2700 INTERNATIONAL
OAKLAND, CA 94601

STAMP:
LICENSED ARCHITECT
PETER WALLER
C-23554
4/30/2023
STATE OF CALIFORNIA

ISSUE SCHEDULE

100 SD	5/11/22
50 DD	7/15/22
100 DD	9/16/22
50 CD	11/18/22
PERMIT SET	12/09/22

REVISION SCHEDULE

NO.	ISSUE	DATE

JOB NUMBER:	1937
DRAWN BY:	MA, DV, TN, MO, SP
CHECKED BY:	Checker
ISSUE DATE:	12/09/22
SCALE:	
TITLE:	CA GREEN BUILDING STANDARDS

SHEET:
G0.51

PRELIMINARY - Not for Construction -

© 2019 PYATOK ARCHITECTURE & URBAN DESIGN

12/8/2022 6:22:18 PM

DISCLAIMER:*THIS DOCUMENT IS PROVIDED AND INTENDED TO BE USED AS A MEANS TO INDICATE AREAS OF COMPLIANCE WITH THE CALIFORNIA GREEN BUILDING STANDARDS (CALGREEN) CODE. DUE TO THE VARIABLES BETWEEN BUILDING DEPARTMENT JURISDICTIONS, THIS CHECKLIST IS TO BE USED ON AN INDIVIDUAL PROJECT BASIS AND MAY BE MODIFIED BY THE END USER TO MEET THOSE INDIVIDUAL NEEDS. THE END USER ASSUMES ALL RESPONSIBILITY ASSOCIATED WITH THE USE OF THIS DOCUMENT, INCLUDING VERIFICATION WITH THE FULL CODE.*

AIA California

2019 CALIFORNIA GREEN BUILDING STANDARDS CODE

RESIDENTIAL MANDATORY MEASURES, SHEET 1 (January 2020, Includes August 2019 Supplement)

Y = YES
N/A = NOT APPLICABLE
RESPON. PARTY = RESPONSIBLE PARTY (ie: ARCHITECT, ENGINEER, OWNER, CONTRACTOR, INSPECTOR ETC.)

MAXIMUM INCREMENTAL REACTIVITY (MIR). The maximum change in weight of ozone formed by adding a compound to the "Base Reactive Organic Gas (ROG) Mixture" per weight of compound added, expressed to hundredths of a gram (g O^3/g ROC).
Note: MIR values for individual compounds and hydrocarbon solvents are specified in CCR, Title 17, Sections 94700 and 94701.

MOISTURE CONTENT. The weight of the water in wood expressed in percentage of the weight of the oven-dry wood.

PRODUCT-WEIGHTED MIR (PWMIR). The sum of all weighted-MIR for all ingredients in a product subject to this article. The PWMIR is the total product reactivity expressed to hundredths of a gram of ozone formed per gram of product (excluding container and packaging).
Note: PWMIR is calculated according to equations found in CCR, Title 17, Section 94521 (a).

REACTIVE ORGANIC COMPOUND (ROC). Any compound that has the potential, once emitted, to contribute to ozone formation in the troposphere.

VOC. A volatile organic compound (VOC) broadly defined as a chemical compound based on carbon chains or rings with vapor pressures greater than 0.1 millimeters of mercury at room temperature. These compounds typically contain hydrogen and may contain oxygen, nitrogen and other elements. See CCR Title 17, Section 94508(a).

4.503 FIREPLACES

4.503.1 GENERAL. Any installed gas fireplace shall be a direct-vent sealed-combustion type. Any installed woodstove or pellet stove shall comply with U.S. EPA New Source Performance Standards (NSPS) emission limits as applicable, and shall have a permanent label indicating they are certified to meet the emission limits. Woodstoves, pellet stoves and fireplaces shall also comply with applicable local ordinances.

4.504 POLLUTANT CONTROL

4.504.1 COVERING OF DUCT OPENINGS & PROTECTION OF MECHANICAL EQUIPMENT DURING CONSTRUCTION. At the time of rough installation, during storage on the construction site and until final startup of the heating, cooling and ventilating equipment, all duct and other related air distribution component openings shall be covered with tape, plastic, sheet metal or other methods acceptable to the enforcing agency to reduce the amount of water, dust or debris which may enter the system.

4.504.2 FINISH MATERIAL POLLUTANT CONTROL. Finish materials shall comply with this section.

4.504.2.1 Adhesives, Sealants and Caulks. Adhesives, sealant and caulks used on the project shall meet the requirements of the following standards unless more stringent local or regional air pollution or air quality management district rules apply:

1. Adhesives, adhesive bonding primers, adhesive primers, sealants, sealant primers and caulks shall comply with local or regional air pollution control or air quality management district rules where applicable or SCAQMD Rule 1168 VOC limits, as shown in Table 4.504.1 or 4.504.2, as applicable. Such products also shall comply with the Rule 1168 prohibition on the use of certain toxic compounds (chloroform, ethylene dichloride, methylene chloride, perchloroethylene and tricloroethylene), except for aerosol products, as specified in Subsection 2 below.

2. Aerosol adhesives, and smaller unit sizes of adhesives, and sealant or caulking compounds (in units of product, less packaging, which do not weigh more than 1 pound and do not consist of more than 16 fluid ounces) shall comply with statewide VOC standards and other requirements, including prohibitions on use of certain toxic compounds, of *California Code of Regulations*, Title 17, commencing with section 94507.

4.504.2.2 Paints and Coatings. Architectural paints and coatings shall comply with VOC limits in Table 1 of the ARB Architectural Suggested Control Measure, as shown in Table 4.504.3, unless more stringent local limits apply. The VOC content limit for coatings that do not meet the definitions for the specialty coatings categories listed in Table 4.504.3 shall be determined by classifying the coating as a Flat, Nonflat or Nonflat-High Gloss coating, based on its gloss, as defined in subsections 4.21, 4.36, and 4.37 of the 2007 California Air Resources Board, Suggested Control Measure, and the corresponding Flat, Nonflat or Nonflat-High Gloss VOC limit in Table 4.504.3 shall apply.

4.504.2.3 Aerosol Paints and Coatings. Aerosol paints and coatings shall meet the Product-weighted MIR Limits for ROC in Section 94522(a)(2) and other requirements, including prohibitions on use of certain toxic compounds and ozone depleting substances, in Sections 94522(e)(1) and (f)(1) of *California Code of Regulations*, Title 17, commencing with Section 94520; and in areas under the jurisdiction of the Bay Area Air Quality Management District additionally comply with the percent VOC by weight of product limits of Regulation 8, Rule 49.

4.504.2.4 Verification. Verification of compliance with this section shall be provided at the request of the enforcing agency. Documentation may include, but is not limited to, the following:

1. Manufacturer's product specification.
2. Field verification of on-site product containers.

TABLE 4.504.1 - ADHESIVE VOC LIMIT[1,2]
(Less Water and Less Exempt Compounds in Grams per Liter)

ARCHITECTURAL APPLICATIONS	VOC LIMIT
INDOOR CARPET ADHESIVES	50
CARPET PAD ADHESIVES	50
OUTDOOR CARPET ADHESIVES	150
WOOD FLOORING ADHESIVES	100
RUBBER FLOOR ADHESIVES	60
SUBFLOOR ADHESIVES	50
CERAMIC TILE ADHESIVES	65
VCT & ASPHALT TILE ADHESIVES	50
DRYWALL & PANEL ADHESIVES	50
COVE BASE ADHESIVES	50
MULTIPURPOSE CONSTRUCTION ADHESIVE	70
STRUCTURAL GLAZING ADHESIVES	100
SINGLE-PLY ROOF MEMBRANE ADHESIVES	250
OTHER ADHESIVES NOT LISTED	50
SPECIALTY APPLICATIONS	
PVC WELDING	510
CPVC WELDING	490
ABS WELDING	325
PLASTIC CEMENT WELDING	250
ADHESIVE PRIMER FOR PLASTIC	550
CONTACT ADHESIVE	80
SPECIAL PURPOSE CONTACT ADHESIVE	250
STRUCTURAL WOOD MEMBER ADHESIVE	140
TOP & TRIM ADHESIVE	250
SUBSTRATE SPECIFIC APPLICATIONS	
METAL TO METAL	30
PLASTIC FOAMS	50
POROUS MATERIAL (EXCEPT WOOD)	50
WOOD	30
FIBERGLASS	80

1. IF AN ADHESIVE IS USED TO BOND DISSIMILAR SUBSTRATES TOGETHER, THE ADHESIVE WITH THE HIGHEST VOC CONTENT SHALL BE ALLOWED.

2. FOR ADDITIONAL INFORMATION REGARDING METHODS TO MEASURE THE VOC CONTENT SPECIFIED IN THIS TABLE, SEE SOUTH COAST AIR QUALITY MANAGEMENT DISTRICT RULE 1168.

TABLE 4.504.2 - SEALANT VOC LIMIT
(Less Water and Less Exempt Compounds in Grams per Liter)

SEALANTS	VOC LIMIT
ARCHITECTURAL	250
MARINE DECK	760
NONMEMBRANE ROOF	300
ROADWAY	250
SINGLE-PLY ROOF MEMBRANE	450
OTHER	420
SEALANT PRIMERS	
ARCHITECTURAL	
NON-POROUS	250
POROUS	775
MODIFIED BITUMINOUS	500
MARINE DECK	760
OTHER	750

TABLE 4.504.3 - VOC CONTENT LIMITS FOR ARCHITECTURAL COATINGS[2,3]
GRAMS OF VOC PER LITER OF COATING, LESS WATER & LESS EXEMPT COMPOUNDS

COATING CATEGORY	VOC LIMIT
FLAT COATINGS	50
NON-FLAT COATINGS	100
NONFLAT-HIGH GLOSS COATINGS	150
SPECIALTY COATINGS	
ALUMINUM ROOF COATINGS	400
BASEMENT SPECIALTY COATINGS	400
BITUMINOUS ROOF COATINGS	50
BITUMINOUS ROOF PRIMERS	350
BOND BREAKERS	350
CONCRETE CURING COMPOUNDS	350
CONCRETE/MASONRY SEALERS	100
DRIVEWAY SEALERS	50
DRY FOG COATINGS	150
FAUX FINISHING COATINGS	350
FIRE RESISTIVE COATINGS	350
FLOOR COATINGS	100
FORM-RELEASE COMPOUNDS	250
GRAPHIC ARTS COATINGS (SIGN PAINTS)	500
HIGH TEMPERATURE COATINGS	420
INDUSTRIAL MAINTENANCE COATINGS	250
LOW SOLIDS COATINGS[1]	120
MAGNESITE CEMENT COATINGS	450
MASTIC TEXTURE COATINGS	100
METALLIC PIGMENTED COATINGS	500
MULTICOLOR COATINGS	250
PRETREATMENT WASH PRIMERS	420
PRIMERS, SEALERS, & UNDERCOATERS	100
REACTIVE PENETRATING SEALERS	350
RECYCLED COATINGS	250
ROOF COATINGS	50
RUST PREVENTATIVE COATINGS	250
SHELLACS	
CLEAR	730
OPAQUE	550
SPECIALTY PRIMERS, SEALERS & UNDERCOATERS	100
STAINS	250
STONE CONSOLIDANTS	450
SWIMMING POOL COATINGS	340
TRAFFIC MARKING COATINGS	100
TUB & TILE REFINISH COATINGS	420
WATERPROOFING MEMBRANES	250
WOOD COATINGS	275
WOOD PRESERVATIVES	350
ZINC-RICH PRIMERS	340

1. GRAMS OF VOC PER LITER OF COATING, INCLUDING WATER & EXEMPT COMPOUNDS

2. THE SPECIFIED LIMITS REMAIN IN EFFECT UNLESS REVISED LIMITS ARE LISTED IN SUBSEQUENT COLUMNS IN THE TABLE.

3. VALUES IN THIS TABLE ARE DERIVED FROM THOSE SPECIFIED BY THE CALIFORNIA AIR RESOURCES BOARD, ARCHITECTURAL COATINGS SUGGESTED CONTROL MEASURE, FEB. 1, 2008. MORE INFORMATION IS AVAILABLE FROM THE AIR RESOURCES BOARD.

TABLE 4.504.5 - FORMALDEHYDE LIMITS[1]
MAXIMUM FORMALDEHYDE EMISSIONS IN PARTS PER MILLION

PRODUCT	CURRENT LIMIT
HARDWOOD PLYWOOD VENEER CORE	0.05
HARDWOOD PLYWOOD COMPOSITE CORE	0.05
PARTICLE BOARD	0.09
MEDIUM DENSITY FIBERBOARD	0.11
THIN MEDIUM DENSITY FIBERBOARD[2]	0.13

1. VALUES IN THIS TABLE ARE DERIVED FROM THOSE SPECIFIED BY THE CALIF. AIR RESOURCES BOARD, AIR TOXICS CONTROL MEASURE FOR COMPOSITE WOOD AS TESTED IN ACCORDANCE WITH ASTM E 1333. FOR ADDITIONAL INFORMATION, SEE CALIF. CODE OF REGULATIONS, TITLE 17, SECTIONS 93120 THROUGH 93120.12.

2. THIN MEDIUM DENSITY FIBERBOARD HAS A MAXIMUM THICKNESS OF 5/16" (8 MM).

DIVISION 4.5 ENVIRONMENTAL QUALITY (continued)

4.504.3 CARPET SYSTEMS. All carpet installed in the building interior shall meet the testing and product requirements of at least one of the following:

1. Carpet and Rug Institute's Green Label Plus Program.
2. California Department of Public Health, "Standard Method for the Testing and Evaluation of Volatile Organic Chemical Emissions from Indoor Sources Using Environmental Chambers" Version 1.1, February 2010 (also known as Specification 01350).
3. NSF/ANSI 140 at the Gold level.
4. Scientific Certifications Systems Indoor Advantage™ Gold.

4.504.3.1 Carpet cushion. All carpet cushion installed in the building interior shall meet the requirements of the Carpet and Rug Institute's Green Label program.

4.504.3.2 Carpet adhesive. All carpet adhesive shall meet the requirements of Table 4.504.1.

4.504.4 RESILIENT FLOORING SYSTEMS. Where resilient flooring is installed , at least 80% of floor area receiving resilient flooring shall comply with one or more of the following:

1. Products compliant with the California Department of Public Health, "Standard Method for the Testing and Evaluation of Volatile Organic Chemical Emissions from Indoor Sources Using Environmental Chambers," Version 1.1, February 2010 (also known as Specification 01350), certified as a CHPS Low-Emitting Material in the Collaborative for High Performance Schools (CHPS) High Performance Products Database.
2. Products certified under UL GREENGUARD Gold (formerly the Greenguard Children & Schools program).
3. Certification under the Resilient Floor Covering Institute (RFCI) FloorScore program.
4. Meet the California Department of Public Health, "Standard Method for the Testing and Evaluation of Volatile Organic Chemical Emissions from Indoor Sources Using Environmental Chambers", Version 1.1, February 2010 (also known as Specification 01350).

4.504.5 COMPOSITE WOOD PRODUCTS. Hardwood plywood, particleboard and medium density fiberboard composite wood products used on the interior or exterior of the buildings shall meet the requirements for formaldehyde as specified in ARB's Air Toxics Control Measure for Composite Wood (17 CCR 93120 et seq.), by or before the dates specified in those sections, as shown in Table 4.504.5

4.504.5.1 Documentation. Verification of compliance with this section shall be provided as requested by the enforcing agency. Documentation shall include at least one of the following:

1. Product certifications and specifications.
2. Chain of custody certifications.
3. Product labeled and invoiced as meeting the Composite Wood Products regulation (see CCR, Title 17, Section 93120, et seq.).
4. Exterior grade products marked as meeting the PS-1 or PS-2 standards of the Engineered Wood Association, the Australian AS/NZS 2269, European 636 3S standards, and Canadian CSA 0121, CSA 0151, CSA 0153 and CSA 0325 standards.
5. Other methods acceptable to the enforcing agency.

4.505 INTERIOR MOISTURE CONTROL

4.505.1 General. Buildings shall meet or exceed the provisions of the *California Building Standards Code*.

4.505.2 CONCRETE SLAB FOUNDATIONS. Concrete slab foundations required to have a vapor retarder by California Building Code, Chapter 19, or concrete slab-on-ground floors required to have a vapor retarder by the California Residential Code, Chapter 5, shall also comply with this section.

4.505.2.1 Capillary break. A capillary break shall be installed in compliance with at least one of the following:

1. A 4-inch (101.6 mm) thick base of 1/2 inch (12.7mm) or larger clean aggregate shall be provided with a vapor barrier in direct contact with concrete and a concrete mix design, which will address bleeding, shrinkage, and curling, shall be used. For additional information, see American Concrete Institute, ACI 302.2R-06.
2. Other equivalent methods approved by the enforcing agency.
3. A slab design specified by a licensed design professional.

4.505.3 MOISTURE CONTENT OF BUILDING MATERIALS. Building materials with visible signs of water damage shall not be installed. Wall and floor framing shall not be enclosed when the framing members exceed 19 percent moisture content. Moisture content shall be verified in compliance with the following:

1. Moisture content shall be determined with either a probe-type or contact-type moisture meter.Equivalent moisture verification methods may be approved by the enforcing agency and shall satisfy requirements found in Section 101.8 of this code.
2. Moisture readings shall be taken at a point 2 feet (610 mm) to 4 feet (1219 mm) from the grade stamped end of each piece verified.
3. At least three random moisture readings shall be performed on wall and floor framing with documentation acceptable to the enforcing agency provided at the time of approval to enclose the wall and floor framing.

Insulation products which are visibly wet or have a high moisture content shall be replaced or allowed to dry prior to enclosure in wall or floor cavities. Wet-applied insulation products shall follow the manufacturers' drying recommendations prior to enclosure.

4.506 INDOOR AIR QUALITY AND EXHAUST

4.506.1 Bathroom exhaust fans. Each bathroom shall be mechanically ventilated and shall comply with the following:

1. Fans shall be ENERGY STAR compliant and be ducted to terminate outside the building.
2. Unless functioning as a component of a whole house ventilation system, fans must be controlled by a humidity control.
   a. Humidity controls shall be capable of adjustment between a relative humidity range less than or equal to 50% to a maximum of 80%. A humidity control may utilize manual or automatic means of adjustment.
   b. A humidity control may be a separate component to the exhaust fan and is not required to be integral (i.e., built-in)

Notes:

1. For the purposes of this section, a bathroom is a room which contains a bathtub, shower or tub/shower combination.
2. Lighting integral to bathroom exhaust fans shall comply with the *California Energy Code*.

4.507 ENVIRONMENTAL COMFORT

4.507.2 HEATING AND AIR-CONDITIONING SYSTEM DESIGN. Heating and air conditioning systems shall be sized, designed and have their equipment selected using the following methods:

1. The heat loss and heat gain is established according to ANSI/ACCA 2 Manual J - 2011 (Residential Load Calculation), ASHRAE handbooks or other equivalent design software or methods.
2. Duct systems are sized according to ANSI/ACCA 1 Manual D - 2014 (Residential Duct Systems), ASHRAE handbooks or other equivalent design software or methods.
3. Select heating and cooling equipment according to ANSI/ACCA 3 Manual S - 2014 (Residential Equipment Selection), or other equivalent design software or methods.

Exception: Use of alternate design temperatures necessary to ensure the system functions are acceptable.

CHAPTER 7
INSTALLER & SPECIAL INSPECTOR QUALIFICATIONS

702 QUALIFICATIONS

702.1 INSTALLER TRAINING. HVAC system installers shall be trained and certified in the proper installation of HVAC systems including ducts and equipment by a nationally or regionally recognized training or certification program. Uncertified persons may perform HVAC installations when under the direct supervision and responsibility of a person trained and certified to install HVAC systems or contractor licensed to install HVAC systems. Examples of acceptable HVAC training and certification programs include but are not limited to the following:

1. State certified apprenticeship programs.
2. Public utility training programs.
3. Training programs sponsored by trade, labor or statewide energy consulting or verification organizations.
4. Programs sponsored by manufacturing organizations.
5. Other programs acceptable to the enforcing agency.

702.2 SPECIAL INSPECTION [HCD]. When required by the enforcing agency, the owner or the responsible entity acting as the owner's agent shall employ one or more special inspectors to provide inspection or other duties necessary to substantiate compliance with this code. Special inspectors shall demonstrate competence to the satisfaction of the enforcing agency for the particular type of inspection or task to be performed. In addition to other certifications or qualifications acceptable to the enforcing agency, the following certifications or education may be considered by the enforcing agency when evaluating the qualifications of a special inspector:

1. Certification by a national or regional green building program or standard publisher.
2. Certification by a statewide energy consulting or verification organization, such as HERS raters, building performance contractors, and home energy auditors.
3. Successful completion of a third party apprentice training program in the appropriate trade.
4. Other programs acceptable to the enforcing agency.

Notes:

1. Special inspectors shall be independent entities with no financial interest in the materials or the project they are inspecting for compliance with this code.
2. HERS raters are special inspectors certified by the California Energy Commission (CEC) to rate homes in California according to the Home Energy Rating System (HERS).

[BSC] When required by the enforcing agency, the owner or the responsible entity acting as the owner's agent shall employ one or more special inspectors to provide inspection or other duties necessary to substantiate compliance with this code. Special inspectors shall demonstrate competence to the satisfaction of the enforcing agency for the particular type of inspection or task to be performed. In addition, the special inspector shall have a certification from a recognized state, national or international association, as determined by the local agency. The area of certification shall be closely related to the primary job function, as determined by the local agency.

Note: Special inspectors shall be independent entities with no financial interest in the materials or the project they are inspecting for compliance with this code.

703 VERIFICATIONS

703.1 DOCUMENTATION. Documentation used to show compliance with this code shall include but is not limited to, construction documents, plans, specifications, builder or installer certification, inspection reports, or other methods acceptable to the enforcing agency which demonstrate substantial conformance. When specific documentation or special inspection is necessary to verify compliance, that method of compliance will be specified in the appropriate section or identified applicable checklist.

PYATOK
1611 TELEGRAPH AVE.
SUITE 200
OAKLAND, CA 94612
T. 510.465.7010 | F. 510.465.8575
www.pyatok.com

THE UNITY COUNCIL
1900 FRUITVALE AVE
#2A
OAKLAND, CA 94601

2700 INTERNATIONAL
OAKLAND, CA 94601

STAMP:
LICENSED ARCHITECT
PETER WALLER
C-23554
4/30/2023
STATE OF CALIFORNIA

ISSUE SCHEDULE

100 SD	5/11/22
50 DD	7/15/22
100 DD	9/16/22
50 CD	11/18/22
PERMIT SET	12/09/22

REVISION SCHEDULE

NO.	ISSUE	DATE

JOB NUMBER:	1937
DRAWN BY:	MA, DV, TN, MO, SP
CHECKED BY:	Checker
ISSUE DATE:	12/09/22
SCALE:	

TITLE:
CA GREEN BUILDING STANDARDS

SHEET:
G0.52

PRELIMINARY - Not for Construction -

© 2019 PYATOK ARCHITECTURE & URBAN DESIGN

DISCLAIMER: *THIS DOCUMENT IS PROVIDED AND INTENDED TO BE USED AS A MEANS TO INDICATE AREAS OF COMPLIANCE WITH THE CALIFORNIA GREEN BUILDING STANDARDS (CALGREEN) CODE. DUE TO THE VARIABLES BETWEEN BUILDING DEPARTMENT JURISDICTIONS, THIS CHECKLIST IS TO BE USED ON AN INDIVIDUAL PROJECT BASIS AND MAY BE MODIFIED BY THE END USER TO MEET THOSE INDIVIDUAL NEEDS. THE END USER ASSUMES ALL RESPONSIBILITY ASSOCIATED WITH THE USE OF THIS DOCUMENT, INCLUDING VERIFICATION WITH THE FULL CODE.*

12/8/2022 6:22:20 PM

Project Name:	2700 International	NRCC-PRF-01-E	Page 1 of 26
Project Address:	2700 International Boulevard Oakland 94601	Calculation Date/Time:	13:48, Tue, Nov 29, 2022
Input File Name:	2700 intl_50pcCD.cibd19x		

A. GENERAL INFORMATION

1	Project Location (city)	Oakland	8	Standards Version	Compliance2019
2	CA Zip Code	94601	9	Compliance Software (version)	CBECC-Com 2019.2.0
3	Climate Zone	3	10	Weather File	OAKLAND_724930_CZ2010.epw
4	Total Conditioned Floor Area in Scope	79,993 ft²	11	Building Orientation (deg)	(N) 45 deg
5	Total Unconditioned Floor Area	14,560 ft²	12	Permitted Scope of Work	NewEnvelopeAndMechanical
6	Total # of Stories (Habitable Above Grade)	6	13	Building Type(s)	Mixed Occupancy
7	Total # of dwelling units	75	14	Gas Type	None

B. PROJECT SUMMARY

Table Instructions: Table B shows which building components are included in the performance calculation. If indicated as not included, the project must show compliance prescriptively if within permit application.

Building Components Complying via Performance					Building Components Complying Prescriptively	
Envelope (see Table G)	☒ Performance ☐ Not Included	Covered Process: Commercial Kitchens	☐ Performance ☒ Not Included		*The following building components are ONLY eligible for prescriptive compliance and should be documented on the NRCC form listed if within the scope of the permit application (i.e. compliance will not be shown on the NRCC-PRF-E).*	
Mechanical (see Table H)	☒ Performance	Covered Process: Computer Rooms	☐ Performance		Indoor Lighting (Unconditioned)§140.6	*NRCC-LTI-E*
	☐ Not Included		☒ Not Included		Outdoor Lighting §140.7	*NRCC-LTO-E*
Domestic Hot Water (see Table I)	☒ Performance	Covered Process: Laboratory Exhaust	☐ Performance		Sign Lighting §140.8	*NRCC -LTS-E*
	☐ Not Included		☒ Not Included		Mandatory Measures	
Lighting (Indoor Conditioned, see Table K)	☐ Performance				*Electrical power systems, commissioning, solar ready, elevator and escalator requirements are mandatory and should on the NRCC form listed if applicable (i.e. compliance will not be shown on the NRCC-PRF-E.)*	
	☒ Not Included				Electrical Power Distribution S110.11	*NRCC-ELC-E*
Solar Thermal Water Heating (see Table I)	☐ Performance				Commissioning S120.8	*NRCC-CXR-E*
	☒ Not Included				Solar Ready S110.10	*NRCC-SRA-E*

Project Name:	2700 International	NRCC-PRF-01-E	Page 2 of 26
Project Address:	2700 International Boulevard Oakland 94601	Calculation Date/Time:	13:48, Tue, Nov 29, 2022
Input File Name:	2700 intl_50pcCD.cibd19x		

C1. COMPLIANCE RESULTS FOR PERFORMANCE COMPONENTS (Annual TDV Energy Use, kBtu/ft ²-yr)

COMPLIES

Energy Component	Standard Design (TDV)	Proposed Design (TDV)	Compliance Margin (TDV)[1]
Space Heating	24.25	15.45	8.80
Space Cooling	2.96	7.65	-4.69
Indoor Fans	10.20	8.70	1.50
Heat Rejection	0.11	--	0.11
Pumps & Misc.	0.59	--	0.59
Domestic Hot Water	35.78	26.72	9.06
Indoor Lighting	13.90	13.89	0.01
ENERGY STANDARDS COMPLIANCE TOTAL	**87.79**	**72.41**	**15.38 (17.5%)**

[1] Notes: The number in parenthesis following the Compliance Margin in column 4. represents the Percent Better than Standard.

C2. RESULTS FOR 'ABOVE CODE' QUALIFICATIONS[1]

☐ This project is pursuing CalGreen Tier 1 ☐ This project is pursuing CalGreen Tier 2

Miscellaneous Energy Component	Standard Design (TDV)	Proposed Design (TDV)	Compliance Margin (TDV)[1]
Receptacle	55.52	55.52	--
Process	22.78	22.78	--
Other Ltg	10.86	10.86	--
Process Motors	0.52	0.52	--
COMPLIANCE TOTAL PLUS MISCELLANEOUS COMPONENTS	**177.47**	**162.09**	**15.4 (8.7%)**

[1] Notes: This table is used to document compliance with programs OTHER THAN Title 24 Part 6, if applicable.

Project Name:	2700 International	NRCC-PRF-01-E	Page 3 of 26
Project Address:	2700 International Boulevard Oakland 94601	Calculation Date/Time:	13:48, Tue, Nov 29, 2022
Input File Name:	2700 intl_50pcCD.cibd19x		

C3. ENERGY USE SUMMARY

Energy Component	Standard Design Site (MWh)	Proposed Design Site (MWh)	Margin (MWh)	Standard Design Site (MBtu)	Proposed Design Site (MBtu)	Margin (MBtu)
Space Heating	0.0	49.4	-49.4	482.4	--	482.4
Space Cooling	3.1	10.9	-7.8	--	--	--
Indoor Fans	27.6	24.3	3.3	--	--	--
Heat Rejection	0.1	--	0.1	--	--	--
Pumps & Misc.	1.4	--	1.4	--	--	--
Domestic Hot Water	2.1	76.4	-74.3	735.4	--	735.4
Indoor Lighting	36.6	36.6	0.0	--	--	-->
Compliance Total	**70.9**	**197.6**	**-126.7**	**1,217.8**	**0.0**	**1217.8**
Receptacle	155.7	155.7	0.0	--	--	--
Process	60.4	60.4	0.0	--	--	--
Other Ltg	28.6	28.6	0.0	--	--	--
Process Motors	1.5	1.5	0.0	--	--	--
TOTAL	**317.1**	**443.8**	**-126.7**	**1,217.8**	**0.0**	**1217.8**

D. EXCEPTIONAL CONDITIONS

This project includes partial performance compliance scope options. The building must show compliance with all other applicable compliance scope options (performance or prescriptively) before occupying.

The aged solar reflectance and aged thermal emittance must be listed in the Cool Roof Rating Council database of certified products. For projects where initial reflectance is used, the initial reflectance must be listed, and the aged reflectance is calculated by the software program and used in the compliance model.

Significant modeling approximations have been used to represent the building design. Such approximations are common and an expected part of energy modeling. However, such approximations should have thermodynamically similar results in the model and in the completed building. Ensure that a narrative has been provided. Review the narrative and ensure the modeling approximations are appropriate. Some approximations may not be appropriate. In such cases, the Exceptional Design Compliance procedure should be used. An example would be modeling of thermal storage by modifying the efficiency of heating and cooling equipment

The proposed building includes HVAC components that do not meet the mandatory efficiency requirements.

This project includes mechanical ventilation systems for enclosed parking garages having total design exhaust rate greater than or equal to 10,000 cfm. Please verify the design meets the Mandatory Requirements for Enclosed Parking Garages as per Section 120.6 (c).

Project Name:	2700 International	NRCC-PRF-01-E	Page 4 of 26
Project Address:	2700 International Boulevard Oakland 94601	Calculation Date/Time:	13:48, Tue, Nov 29, 2022
Input File Name:	2700 intl_50pcCD.cibd19x		

E. HERS VERIFICATION

The following is a summary of the features that must be field-verified by a certified HERS Rater as a condition for meeting the modeled energy performance for this computer analysis. Additional detail is provided in the building tables below.

Building-level Verifications:

- Residential ventilation airflow
- Residential kitchen hood rated by HVI

F. ADDITIONAL REMARKS

individual exhaust fans in homes have been modeled as a central exhaust fan with combined total CFM and fan power to match specified fans.

G1. ENVELOPE GENERAL INFORMATION (conditioned spaces only)

1	2	3	4
Opaque Surfaces & Orientation	Total Gross Surface Area (ft²)	Total Fenestration Area (ft²)	Window to Wall Ratio (%)
North-Facing[1]	10,067 ft²	1,828 ft²	18.2%
East-Facing[2]	10,307 ft²	2,299 ft²	22.3%
South-Facing[3]	11,508 ft²	2,867 ft²	24.9%
West-Facing[4]	10,683 ft²	2,870 ft²	26.9%
Total	**42,564 ft²**	**9,865 ft²**	**23.2%**
Roof	17,975 ft²	0 ft²	00.0%

Notes:
[1] North-Facing is oriented to within 45 degrees of true north, including 45°00'00" east of north (NE), but excluding 45°00'00" west of north (NW).
[2] East-Facing is oriented to within 45 degrees of true east, including 45°00'00" south of east (SE), but excluding 45°00'00" north of east (NE).
[3] South-Facing is oriented to within 45 degrees of true south, including 45°00'00" west of south (SW), but excluding 45°00'00" east of south (SE).
[4] West-Facing is oriented to within 45 degrees of true west, including 45°00'00" north of due west (NW), but excluding 45°00'00" south of west (SW).

G2. CRRC ROOFING PRODUCT SUMMARY

1	2	3	4	5
Assembly Name	Roof Pitch	Aged Solar Reflectance	Thermal Emittance	SRI
Roof-Framed	Low-Slope	0.55	0.75	Not Provided

Project Name:	2700 International	NRCC-PRF-01-E	Page 5 of 26
Project Address:	2700 International Boulevard Oakland 94601	Calculation Date/Time:	13:48, Tue, Nov 29, 2022
Input File Name:	2700 intl_50pcCD.cibd19x		

G3. OPAQUE SURFACE ASSEMBLY SUMMARY

1	2	3	4	5	6	7	8	9	10
Surface Name	Surface Type	Area (ft²)	Framing Type	Cavity R-Value	Continuous R-Value	Units	Value	Description of Assembly Layers	Status[1]
L2-6-Ext Wall	ExteriorWall	40747	Wood	21	NA	U-Factor	0.065	Stucco - 7/8 in. Gypsum Board - 5/8 in. Wood framed wall, 16in. OC, 5.5in., R-21 Gypsum Board - 5/8 in.	N
Roof-Framed	Roof	16811	Wood	38	5	U-Factor	0.024	Single Ply Roofing - 1/4 in. Compliance Insulation R5.00 Plywood - 3/4 in. Wood framed roof, 24in. OC, 11.25in., R-38 Gypsum Board - 5/8 in.	N
L1-Ext Metal Wall	ExteriorWall	4275	Metal	21	4	U-Factor	0.105	Stone - 1 in. Compliance Insulation R4.00 Metal framed wall, 16in. OC, 5.5in., R-21 Gypsum Board - 5/8 in.	N
Slab-on-Grade	UndergroundFloor	23230	NA	0	NA	F-Factor	0.73	Slab Type = UnheatedSlabOnGrade Insulation Orientation = 12inHorizontal Insulation R-Value = R0	N
L1-Conc-Wall	ExteriorWall	5804	NA	0	NA	U-Factor	0.403	Concrete - 80 lb/ft3 - 6 in.	N
Wall-Interior	InteriorWall	38446	Wood	13	9	U-Factor	0.047	Gypsum Board - 5/8 in. Wood framed wall, 16in. OC, 3.5in., R-13 Compliance Insulation R9.00 Gypsum Board - 5/8 in.	N
Floor-Interior	InteriorFloor	76156	Wood	19	NA	U-Factor	0.047	Gypsum Board - 5/8 in. Wood framed floor, 16in. OC, 11.25in., R-19 Plywood - 3/4 in. Linoleum/cork tile - 1/4 in.	N
Podium Slab	Roof	6419	NA	0	11	U-Factor	0.075	Concrete - 80 lb/ft3 - 6 in. Compliance Insulation R11.00	N
Wall-Int-Demising-Conc	InteriorWall	1240	NA	0	NA	U-Factor	0.334	Concrete - 80 lb/ft3 - 6 in.	N

Project Name:	2700 International	NRCC-PRF-01-E	Page 6 of 26
Project Address:	2700 International Boulevard Oakland 94601	Calculation Date/Time:	13:48, Tue, Nov 29, 2022
Input File Name:	2700 intl_50pcCD.cibd19x		

[1] Status: N - New, A – Altered, E – Existing

G5. FENESTRATION ASSEMBLY SUMMARY

1	2	3	4	5	6	7	8	9
Fenestration Assembly Name / Tag or I.D.	Fenestration Type / Product Type / Frame Type	Certification Method[1]	Assembly Method	Area ft²	Overall U-factor	Overall SHGC	Overall VT	Status[2]
Residential windows	VerticalFenestration OperableWindow N/A	NFRC Rated	Manufactured	9024	0.33	0.24	0.27	N
Store Front Windows	VerticalFenestration CurtainWall MetalFramingWithThermalBreak	Default Performance	Manufactured	1626	0.55	0.69	0.88	N

[1] Newly installed fenestration shall have a certified NFRC Label Certificate or use the CEC default tables found in Table 110.6-A and Table 110.6-B. Center of Glass (COG) values are for the glass-only, determined by the manufacturer, and are shown for ease of verification. Site-built fenestration values are calculated per Nonresidential Appendix NA6 and are used in the analysis.
[2] Status: N - New, A – Altered, E – Existing

H1. DRY SYSTEM EQUIPMENT (furnaces, air handling units, heat pumps, VRF, economizers etc.)

1	2	3	4	5	6	7	8	9	10	11	12
			Heating				Cooling				
Equipment Name	Equipment Type	Qty	Total Heating Output (kBtu/h)	Supp Heat Output (kBtuh)	Efficiency Unit	Efficiency	Total Cooling Output (kBtu/h)	Efficiency Unit	Efficiency	Economizer Type (if present)	Status[1]
SF-1-2-Apartments	DOASCV (Packaged1Phase)	1	0	0	NA	NA	0	NA	NA	NoEconomizer	N
SF-3-4-Corridors	DOASCV (Packaged1Phase)	1	0	0	NA	NA	0	NA	NA	NoEconomizer	N
SF-6-7 DOAS	DOASCV (Packaged1Phase)	1	0	0	NA	NA	0	NA	NA	NoEconomizer	N
SF-8-DOAS	DOASCV (Packaged1Phase)	1	0	0	NA	NA	0	NA	NA	NoEconomizer	N
ZN-L2-AAA-1B2_1C1	PTHP (NA)	2	13	0	HSPF	8.2	13	EER	11.0	NA	N

Project Name:	2700 International	NRCC-PRF-01-E	Page 7 of 26
Project Address:	2700 International Boulevard Oakland 94601	Calculation Date/Time:	13:48, Tue, Nov 29, 2022
Input File Name:	2700 intl_50pcCD.cibd19x		

H1. DRY SYSTEM EQUIPMENT (furnaces, air handling units, heat pumps, VRF, economizers etc.)

1	2	3	4	5	6	7	8	9	10	11	12
			Heating				Cooling				
Equipment Name	Equipment Type	Qty	Total Heating Output (kBtu/h)	Supp Heat Output (kBtuh)	Efficiency Unit	Efficiency	Total Cooling Output (kBtu/h)	Efficiency Unit	Efficiency	Economizer Type (if present)	Status[1]
ZN-L2-PPP-1A1_1B3_1C2	PTHP (NA)	3	12	0	HSPF	8.2	12	EER	11.0	NA	N
ZN-L2-QQQ-1A4_1A4.2_1B1	PTHP (NA)	3	10	0	HSPF	8.2	10	EER	11.0	NA	N
ZN-L2-SSS-1B5_1C1	PTHP (NA)	2	17	0	HSPF	8.2	17	EER	11.0	NA	N
ZN-L2-TTT-3A1_1A2_1B1	PTHP (NA)	5	10	0	HSPF	8.2	10	EER	11.1	NA	N
ZN-L3-CCC-1B2_1C1	PTHP (NA)	2	11	0	HSPF	8.2	11	EER	11.1	NA	N
ZN-L3-DDD-1B5_1C1	PTHP (NA)	2	14	0	HSPF	8.2	14	EER	11.1	NA	N
ZN-L3-EEE-3A1_1A2_1B1	PTHP (NA)	5	9	0	HSPF	8.2	9	EER	11.4	NA	N
ZN-L3-MMM-1A1_2A3_1B3_1B4_1C2	PTHP (NA)	6	10	0	HSPF	8.2	10	EER	11.1	NA	N
ZN-L3-RRR-1B1_1C4	PTHP (NA)	2	14	0	HSPF	8.2	14	EER	11.1	NA	N
ZN-L4-FFF-1A1_2A3_1B3_1B4_1C2	PTHP (NA)	6	10	0	HSPF	8.2	10	EER	11.1	NA	N
ZN-L4-GGG-1B2_1C1	PTHP (NA)	2	11	0	HSPF	8.2	11	EER	11.1	NA	N
ZN-L4-HHH-1B5_1C1	PTHP (NA)	2	15	0	HSPF	8.2	15	EER	11.1	NA	N
ZN-L4-III-1C3_COURT	PTHP (NA)	1	16	0	HSPF	8.2	16	EER	11.1	NA	N
ZN-L4-LLL-3A1_1A5	PTHP (NA)	4	8	0	HSPF	8.2	8	EER	11.5	NA	N
ZN-L5-NNN-1A1_2A3_1B3_1B4_1C2	PTHP (NA)	6	10	0	HSPF	8.2	10	EER	11.1	NA	N
ZN-L5-OOO-1B2_1C3	PTHP (NA)	2	12	0	HSPF	8.2	12	EER	11.1	NA	N
ZN-L5-UUU-1C3_COURT	PTHP (NA)	1	16	0	HSPF	8.2	16	EER	11.1	NA	N
ZN-L5-VVV-1C3_EAST	PTHP (NA)	1	15	0	HSPF	8.2	15	EER	11.1	NA	N
ZN-L5-WWW-3A1_1A5	PTHP (NA)	4	8	0	HSPF	8.2	8	EER	11.5	NA	N

Project Name:	2700 International	NRCC-PRF-01-E	Page 8 of 26
Project Address:	2700 International Boulevard Oakland 94601	Calculation Date/Time:	13:48, Tue, Nov 29, 2022
Input File Name:	2700 intl_50pcCD.cibd19x		

H1. DRY SYSTEM EQUIPMENT (furnaces, air handling units, heat pumps, VRF, economizers etc.)

1	2	3	4	5	6	7	8	9	10	11	12
			Heating				Cooling				
Equipment Name	Equipment Type	Qty	Total Heating Output (kBtu/h)	Supp Heat Output (kBtuh)	Efficiency Unit	Efficiency	Total Cooling Output (kBtu/h)	Efficiency Unit	Efficiency	Economizer Type (if present)	Status[1]
ZN-L6-IOP-4A1	PTHP (NA)	4	9	0	HSPF	8.2	9	EER	11.2	NA	N
ZN-L6-QWE-1C3_EAST	PTHP (NA)	1	17	0	HSPF	8.2	17	EER	11.1	NA	N
ZN-L6-XXX-1B2_1C3	PTHP (NA)	2	14	0	HSPF	8.2	14	EER	11.1	NA	N
ZN-L6-YYY-1A1_2A3_1B3_1B4_1C2	PTHP (NA)	6	11	0	HSPF	8.2	11	EER	11.1	NA	N
ZN-L6-ZZZ-1C3_COURT	PTHP (NA)	1	18	0	HSPF	8.2	18	EER	11.1	NA	N
HP2 L1-PROP_MGMT_SUITE	SZHP (Split1Phase)	1	34	0	HSPF	8.200	35	SEER/EER	15.000 / 12.200	NA	N
HP3-4 L-COMM_WITH_KITCH_LNDRY	SZHP (Split1Phase)	1	35	0	HSPF	8.200	52	SEER/EER	15.000 / 12.200	NA	N
HP1 L1-LOBBY	SZHP (Split1Phase)	1	34	0	HSPF	8.200	35	SEER/EER	15.000 / 12.200	NA	N

[1] Status: N - New, A – Altered, E – Existing

H2. FAN SYSTEMS SUMMARY

1	2	3	4	5	6	7	8	9	10	11	12	13	14
		Design OA	Supply Fan					Return Fan					
Name or Item Tag	Qty	CFM	CFM	Modeling Method	Power	Power Units	Control	CFM	Modeling Method	Power	Power Units	Control	Status[1]
SF-1-2-Apartments	1	3373	3690	BrakeHorsePower	1.070	bhp	ConstantVolume	3690	PowerPerUnitFlow	0.250	W/cfm	ConstantVolume	N
SF-3-4-Corridors	1	2254	2600	BrakeHorsePower	0.720	bhp	ConstantVolume	NA	NA	NA	NA	NA	N
SF-6-7 DOAS	1	510	475	PowerPerUnitFlow	0.410	W/cfm	ConstantVolume	NA	NA	NA	NA	NA	N
SF-8-DOAS	1	288	500	PowerPerUnitFlow	0.250	W/cfm	ConstantVolume	NA	NA	NA	NA	NA	N

Project Name:	2700 International	NRCC-PRF-01-E	Page 9 of 26
Project Address:	2700 International Boulevard Oakland 94601	Calculation Date/Time:	13:48, Tue, Nov 29, 2022
Input File Name:	2700 intl_50pcCD.cibd19x		

H2. FAN SYSTEMS SUMMARY

1	2	3	4	5	6	7	8	9	10	11	12	13	14
		Design OA	Supply Fan					Return Fan					
Name or Item Tag	Qty	CFM	CFM	Modeling Method	Power	Power Units	Control	CFM	Modeling Method	Power	Power Units	Control	Status[1]
ZN-L2-AAA-1B2_1C1	2	0	447	PowerPerUnitFlow	0.150	W/cfm	VariableSpeedDrive	NA	NA	NA	NA	NA	N
ZN-L2-PPP-1A1_1B3_1C2	3	0	391	PowerPerUnitFlow	0.150	W/cfm	VariableSpeedDrive	NA	NA	NA	NA	NA	N
ZN-L2-QQQ-1A4_1A4.2_1B1	3	0	350	PowerPerUnitFlow	0.150	W/cfm	VariableSpeedDrive	NA	NA	NA	NA	NA	N
ZN-L2-SSS-1B5_1C1	2	0	557	PowerPerUnitFlow	0.150	W/cfm	VariableSpeedDrive	NA	NA	NA	NA	NA	N
ZN-L2-TTT-3A1_1A2_1B1	5	0	326	PowerPerUnitFlow	0.150	W/cfm	VariableSpeedDrive	NA	NA	NA	NA	NA	N
ZN-L3-CCC-1B2_1C1	2	0	374	PowerPerUnitFlow	0.150	W/cfm	VariableSpeedDrive	NA	NA	NA	NA	NA	N
ZN-L3-DDD-1B5_1C1	2	0	478	PowerPerUnitFlow	0.150	W/cfm	VariableSpeedDrive	NA	NA	NA	NA	NA	N
ZN-L3-EEE-3A1_1A2_1B1	5	0	293	PowerPerUnitFlow	0.150	W/cfm	VariableSpeedDrive	NA	NA	NA	NA	NA	N
ZN-L3-MMM-1A1_2A3_1B3_1B4_1C2	6	0	318	PowerPerUnitFlow	0.150	W/cfm	VariableSpeedDrive	NA	NA	NA	NA	NA	N
ZN-L3-RRR-1B1_1C4	2	0	476	PowerPerUnitFlow	0.150	W/cfm	VariableSpeedDrive	NA	NA	NA	NA	NA	N
ZN-L4-FFF-1A1_2A3_1B3_1B4_1C2	6	0	320	PowerPerUnitFlow	0.150	W/cfm	VariableSpeedDrive	NA	NA	NA	NA	NA	N
ZN-L4-GGG-1B2_1C1	2	0	374	PowerPerUnitFlow	0.150	W/cfm	VariableSpeedDrive	NA	NA	NA	NA	NA	N
ZN-L4-HHH-1B5_1C1	2	0	496	PowerPerUnitFlow	0.150	W/cfm	VariableSpeedDrive	NA	NA	NA	NA	NA	N
ZN-L4-III-1C3_COURT	1	0	540	PowerPerUnitFlow	0.150	W/cfm	VariableSpeedDrive	NA	NA	NA	NA	NA	N

PYATOK
1611 TELEGRAPH AVE.
SUITE 200
OAKLAND, CA 94612
T. 510.465.7010 | F. 510.465.8575
www.pyatok.com

THE UNITY COUNCIL
1900 FRUITVALE AVE
#2A
OAKLAND, CA 94601

2700 INTERNATIONAL
OAKLAND, CA 94601

STAMP:
LICENSED ARCHITECT
PETER WALLER
C-23551
RENEWAL DATE
4/30/2023
STATE OF CALIFORNIA

ISSUE SCHEDULE

100 SD	5/11/22
50 DD	7/15/22
100 DD	9/16/22
50 CD	11/18/22
PERMIT SET	12/09/22

REVISION SCHEDULE

NO.	ISSUE	DATE

JOB NUMBER:	1937
DRAWN BY:	Author
CHECKED BY:	Checker
ISSUE DATE:	12/09/22
SCALE:	

TITLE:
TITLE 24 REPORT

SHEET:
G0.55

PRELIMINARY - Not for Construction -

© 2019 PYATOK ARCHITECTURE & URBAN DESIGN

12/8/2022 6:22:23 PM

H2. FAN SYSTEMS SUMMARY

1	2	3	4	5	6	7	8	9	10	11	12	13	14
Name or Item Tag	Qty	Design OA	Supply Fan					Return Fan					Status[1]
		CFM	CFM	Modeling Method	Power	Power Units	Control	CFM	Modeling Method	Power	Power Units	Control	
ZN-L4-LLL-3A1_1A5	4	0	278	PowerPerUnitFlow	0.150	W/cfm	VariableSpeedDrive	NA	NA	NA	NA	NA	N
ZN-L5-NNN-1A1_2A3_1B3_1B4_1C2	6	0	323	PowerPerUnitFlow	0.150	W/cfm	VariableSpeedDrive	NA	NA	NA	NA	NA	N
ZN-L5-OOO-1B2_1C3	2	0	410	PowerPerUnitFlow	0.150	W/cfm	VariableSpeedDrive	NA	NA	NA	NA	NA	N
ZN-L5-UUU-1C3_COURT	1	0	547	PowerPerUnitFlow	0.150	W/cfm	VariableSpeedDrive	NA	NA	NA	NA	NA	N
ZN-L5-VVV-1C3_EAST	1	0	505	PowerPerUnitFlow	0.150	W/cfm	VariableSpeedDrive	NA	NA	NA	NA	NA	N
ZN-L5-WWW-3A1_1A5	4	0	280	PowerPerUnitFlow	0.150	W/cfm	VariableSpeedDrive	NA	NA	NA	NA	NA	N
ZN-L6-IOP-4A1	4	0	307	PowerPerUnitFlow	0.150	W/cfm	VariableSpeedDrive	NA	NA	NA	NA	NA	N
ZN-L6-QWE-1C3_EAST	1	0	558	PowerPerUnitFlow	0.150	W/cfm	VariableSpeedDrive	NA	NA	NA	NA	NA	N
ZN-L6-XXX-1B2_1C3	2	0	468	PowerPerUnitFlow	0.150	W/cfm	VariableSpeedDrive	NA	NA	NA	NA	NA	N
ZN-L6-YYY-1A1_2A3_1B3_1B4_1C2	6	0	363	PowerPerUnitFlow	0.150	W/cfm	VariableSpeedDrive	NA	NA	NA	NA	NA	N
ZN-L6-ZZZ-1C3_COURT	1	0	608	PowerPerUnitFlow	0.150	W/cfm	VariableSpeedDrive	NA	NA	NA	NA	NA	N
HP2 L1-PROP_MGMT_SUITE	1	0	1200	PowerPerUnitFlow	0.310	W/cfm	ConstantVolume	NA	NA	NA	NA	NA	N
HP3-4 L-COMM_WITH_KITCH_LNDRY	1	0	2070	PowerPerUnitFlow	0.180	W/cfm	ConstantVolume	NA	NA	NA	NA	NA	N

H2. FAN SYSTEMS SUMMARY

1	2	3	4	5	6	7	8	9	10	11	12	13	14
Name or Item Tag	Qty	Design OA	Supply Fan					Return Fan					Status[1]
		CFM	CFM	Modeling Method	Power	Power Units	Control	CFM	Modeling Method	Power	Power Units	Control	
COMM_WITH_KITCH_LNDRY													
HP1 L1-LOBBY	1	0	1200	PowerPerUnitFlow	0.310	W/cfm	ConstantVolume	NA	NA	NA	NA	NA	N

[1] *Status: N - New, A – Altered, E – Existing*

H3. EXHAUST FAN SUMMARY

1	2	3	4	5	6	7	8
System ID	Zone Name	Qty	CFM	Motor BHP	Power Per Flow (W/cfm)	Total Static Pressure (in. H_2O)	Status[1]
GEF-1-GARAGE	TZ-L1-GARAGE	1	8,000	1.640	0.177	0.85	N

[1] *Status: N - New, A – Altered, E – Existing*

H4. Wet System Equipment(boilers,chillers,cooling towers,etc.)

This Section Does Not Apply

H5. PUMPS

This Section Does Not Apply

H6. SYSTEM SPECIAL FEATURES

1	2	3	4
System Name	Equipment Type	Window Interlocks per §140.4(n)	Other Special Features and Controls
SF-6-7 DOAS	DOASCV	NA	DDC Controls
SF-8-DOAS	DOASCV	NA	DDC Controls
ZN-L2-AAA-1B2_1C1	PTHP	NA	NA
ZN-L2-PPP-1A1_1B3_1C2	PTHP	NA	NA
ZN-L2-QQQ-1A4_1A4.2_1B1	PTHP	NA	NA

H6. SYSTEM SPECIAL FEATURES

1	2	3	4
System Name	Equipment Type	Window Interlocks per §140.4(n)	Other Special Features and Controls
ZN-L2-SSS-1B5_1C1	PTHP	NA	NA
ZN-L2-TTT-3A1_1A2_1B1	PTHP	NA	NA
ZN-L3-CCC-1B2_1C1	PTHP	NA	NA
ZN-L3-DDD-1B5_1C1	PTHP	NA	NA
ZN-L3-EEE-3A1_1A2_1B1	PTHP	NA	NA
ZN-L3-MMM-1A1_2A3_1B3_1B4_1C2	PTHP	NA	NA
ZN-L3-RRR-1B1_1C4	PTHP	NA	NA
ZN-L4-FFF-1A1_2A3_1B3_1B4_1C2	PTHP	NA	NA
ZN-L4-GGG-1B2_1C1	PTHP	NA	NA
ZN-L4-HHH-1B5_1C1	PTHP	NA	NA
ZN-L4-III-1C3_COURT	PTHP	NA	NA
ZN-L4-LLL-3A1_1A5	PTHP	NA	NA
ZN-L5-NNN-1A1_2A3_1B3_1B4_1C2	PTHP	NA	NA
ZN-L5-OOO-1B2_1C3	PTHP	NA	NA
ZN-L5-UUU-1C3_COURT	PTHP	NA	NA
ZN-L5-VVV-1C3_EAST	PTHP	NA	NA
ZN-L5-WWW-3A1_1A5	PTHP	NA	NA
ZN-L6-IOP-4A1	PTHP	NA	NA
ZN-L6-QWE-1C3_EAST	PTHP	NA	NA
ZN-L6-XXX-1B2_1C3	PTHP	NA	NA
ZN-L6-YYY-1A1_2A3_1B3_1B4_1C2	PTHP	NA	NA
ZN-L6-ZZZ-1C3_COURT	PTHP	NA	NA
HP2 L1-PROP_MGMT_SUITE	SZHP	NA	NA
HP3-4 L-COMM_WITH_KITCH_LNDRY	SZHP	No	NA
HP1 L1-LOBBY	SZHP	NA	NA
NonRes Dummy WH System	Service Hot Water, Primary Only	NA	Fixed Temperature Control

H6. SYSTEM SPECIAL FEATURES

1	2	3	4
System Name	Equipment Type	Window Interlocks per §140.4(n)	Other Special Features and Controls

Notes: This table includes controls related to the performance path only. For projects using the prescriptive path, mandatory and prescriptive controls requirements are documented on the NRCC-MCH-E.

H7. NONRESIDENTIAL VENTILATION

1	2	3	4	5	6	7
Zone Name	Mechanical Ventilation					DCV or Occupant Sensor Controls, or Both
	Ventilation Function	# of people	Supply OA CFM	Exhaust CFM	Conditioned Area (sf)	
TZ-L1-4COMM_SPACES_2RR	NA	0.00	0	0	0	NA
TZ-L1-LOBBY	General - Corridors	3.67	110	0	733	NA
TZ-L1-PROP_MGMT_SUITE	Office - Office space	13.34	400	0	2668	NA
TZ-L2-COMM_WITH_KITCH_LNDRY	Misc - All others	63.99	288	0	1920	NA
TZ-L2-LKJ-CORR_STAIR2_ELEC_EAST	General - Corridors	5.40	162	0	1081	NA
TZ-L2-YXA-WEST_CORR_ELEV_WASTE_STAIR1	General - Corridors	7.88	236	0	1576	NA
TZ-L3-DHK-CORR_STAIR2_ELEC_EAST	General - Corridors	5.40	162	0	1081	NA
TZ-L3-EBT-WEST_CORR_STAIR1_WASTE_ELEV	General - Corridors	10.06	302	0	2012	NA
TZ-L4-CVB-WEST_STAIR1_ELEV_CORR_WASTE	General - Corridors	10.06	302	0	2012	NA
TZ-L4-RFV-EAST_CORR_STAIR2_ELEC	General - Corridors	5.40	162	0	1081	NA
TZ-L5-MJU-WEST_WASTE_CORR_STAIR1_ELEV	General - Corridors	10.06	302	0	2012	NA
TZ-L5-MNB-CORR_STAIR2_ELEC_EAST	General - Corridors	5.40	162	0	1081	NA
TZ-L6-ASD-CORR_STAIR2_ELEC_EAST	General - Corridors	5.40	162	0	1081	NA
TZ-L6-CGB-WEST_STAIR1_CORR_ELEV_WASTE	General - Corridors	10.06	302	0	2012	NA

H8. HIGH-RISE RESIDENTIAL DWELLING UNIT AND HOTEL/MOTEL VENTILATION

1	2	3	4	5	6	7	8
Zone Name	Mechanical Ventilation						DCV or Occupant Sensor Controls, or Both
	Ventilation Function	# hotel rooms	# of bedrooms	Supply OA CFM	Exhaust CFM	Conditioned Area (sf)	
TZ-L2-AAA-1B2_1C1	NA	0	5	111	111	1953	NA
TZ-L2-PPP-1A1_1B3_1C2	NA	0	6	146	146	2572	NA
TZ-L2-QQQ-1A4_1A4.2_1B1	NA	0	4	114	114	2116	NA
TZ-L2-SSS-1B5_1C1	NA	0	5	113	113	2011	NA
TZ-L2-TTT-3A1_1A2_1B1	NA	0	6	177	177	3146	NA
TZ-L3-CCC-1B2_1C1	NA	0	5	111	111	1953	NA
TZ-L3-DDD-1B5_1C1	NA	0	5	113	113	2011	NA
TZ-L3-EEE-3A1_1A2_1B1	NA	0	6	177	177	3146	NA
TZ-L3-MMM-1A1_2A3_1B3_1B4_1C2	NA	0	10	255	255	4492	NA
TZ-L3-RRR-1B1_1C4	NA	0	5	115	115	2116	NA
TZ-L4-FFF-1A1_2A3_1B3_1B4_1C2	NA	0	10	259	259	4492	NA
TZ-L4-GGG-1B2_1C1	NA	0	5	111	111	1953	NA
TZ-L4-HHH-1B5_1C1	NA	0	5	113	113	2011	NA
TZ-L4-III-1C3_COURT	NA	0	3	65	65	1168	NA
TZ-L4-LLL-3A1_1A5	NA	0	4	132	132	2375	NA
TZ-L5-NNN-1A1_2A3_1B3_1B4_1C2	NA	0	10	259	259	4492	NA
TZ-L5-OOO-1B2_1C3	NA	0	5	111	111	1953	NA
TZ-L5-UUU-1C3_COURT	NA	0	3	65	65	1168	NA
TZ-L5-VVV-1C3_EAST	NA	0	3	62	62	1076	NA
TZ-L5-WWW-3A1_1A5	NA	0	4	132	132	2375	NA
TZ-L6-IOP-4A1	NA	0	4	132	132	2375	NA
TZ-L6-QWE-1C3_EAST	NA	0	3	62	62	1076	NA
TZ-L6-XXX-1B2_1C3	NA	0	5	111	111	1953	NA
TZ-L6-YYY-1A1_2A3_1B3_1B4_1C2	NA	0	10	259	259	4492	NA

H8. HIGH-RISE RESIDENTIAL DWELLING UNIT AND HOTEL/MOTEL VENTILATION

1	2	3	4	5	6	7	8
Zone Name	Mechanical Ventilation						DCV or Occupant Sensor Controls, or Both
	Ventilation Function	# hotel rooms	# of bedrooms	Supply OA CFM	Exhaust CFM	Conditioned Area (sf)	
TZ-L6-ZZZ-1C3_COURT	NA	0	3	65	65	1168	NA

H9. ZONAL SYSTEM AND TERMINAL UNIT SUMMARY

1	2	3	4	5	6	7	8	9	10	11	12	13
System ID	Zone Name	System Type	Qty	Rated Capacity (kBtuh)		Airflow (cfm)			Fan			
				Heating	Cooling	Design	Min.	Min. Ratio	Power	Power Units	Cycles	VSD
ZN-L2-AAA-1B2_1C1	TZ-L2-AAA-1B2_1C1	PTHP	2	13.00	13.00	447	134	0.3	0.150	W/cfm	☒	☒
ZN-L2-PPP-1A1_1B3_1C2	TZ-L2-PPP-1A1_1B3_1C2	PTHP	3	12.00	12.00	391	117	0.3	0.150	W/cfm	☒	☒
ZN-L2-QQQ-1A4_1A4.2_1B1	TZ-L2-QQQ-1A4_1A4.2_1B1	PTHP	3	10.00	10.00	350	105	0.3	0.150	W/cfm	☒	☒
ZN-L2-SSS-1B5_1C1	TZ-L2-SSS-1B5_1C1	PTHP	2	17.00	17.00	557	167	0.3	0.150	W/cfm	☒	☒
ZN-L2-TTT-3A1_1A2_1B1	TZ-L2-TTT-3A1_1A2_1B1	PTHP	5	10.00	10.00	326	98	0.3	0.150	W/cfm	☒	☒
ZN-L3-CCC-1B2_1C1	TZ-L3-CCC-1B2_1C1	PTHP	2	11.00	11.00	374	112	0.3	0.150	W/cfm	☒	☒
ZN-L3-DDD-1B5_1C1	TZ-L3-DDD-1B5_1C1	PTHP	2	14.00	14.00	478	143	0.3	0.150	W/cfm	☒	☒
ZN-L3-EEE-3A1_1A2_1B1	TZ-L3-EEE-3A1_1A2_1B1	PTHP	5	9.00	9.00	293	88	0.3	0.150	W/cfm	☒	☒
ZN-L3-MMM-1A1_2A3_1B3_1B4_1C2	TZ-L3-MMM-1A1_2A3_1B3_1B4_1C2	PTHP	6	10.00	10.00	318	95	0.3	0.150	W/cfm	☒	☒
ZN-L3-RRR-1B1_1C4	TZ-L3-RRR-1B1_1C4	PTHP	2	14.00	14.00	476	143	0.3	0.150	W/cfm	☒	☒
ZN-L4-FFF-1A1_2A3_1B3_1B4_1C2	TZ-L4-FFF-1A1_2A3_1B3_1B4_1C2	PTHP	6	10.00	10.00	320	96	0.3	0.150	W/cfm	☒	☒

H9. ZONAL SYSTEM AND TERMINAL UNIT SUMMARY

1	2	3	4	5	6	7	8	9	10	11	12	13
System ID	Zone Name	System Type	Qty	Rated Capacity (kBtuh)		Airflow (cfm)			Fan			
				Heating	Cooling	Design	Min.	Min. Ratio	Power	Power Units	Cycles	VSD
ZN-L4-GGG-1B2_1C1	TZ-L4-GGG-1B2_1C1	PTHP	2	11.00	11.00	374	112	0.3	0.150	W/cfm	☒	☒
ZN-L4-HHH-1B5_1C1	TZ-L4-HHH-1B5_1C1	PTHP	2	15.00	15.00	496	149	0.3	0.150	W/cfm	☒	☒
ZN-L4-III-1C3_COURT	TZ-L4-III-1C3_COURT	PTHP	1	16.00	16.00	540	162	0.3	0.150	W/cfm	☒	☒
ZN-L4-LLL-3A1_1A5	TZ-L4-LLL-3A1_1A5	PTHP	4	8.00	8.00	278	83	0.3	0.150	W/cfm	☒	☒
ZN-L5-NNN-1A1_2A3_1B3_1B4_1C2	TZ-L5-NNN-1A1_2A3_1B3_1B4_1C2	PTHP	6	10.00	10.00	323	97	0.3	0.150	W/cfm	☒	☒
ZN-L5-OOO-1B2_1C3	TZ-L5-OOO-1B2_1C3	PTHP	2	12.00	12.00	410	123	0.3	0.150	W/cfm	☒	☒
ZN-L5-UUU-1C3_COURT	TZ-L5-UUU-1C3_COURT	PTHP	1	16.00	16.00	547	164	0.3	0.150	W/cfm	☒	☒
ZN-L5-VVV-1C3_EAST	TZ-L5-VVV-1C3_EAST	PTHP	1	15.00	15.00	505	152	0.3	0.150	W/cfm	☒	☒
ZN-L5-WWW-3A1_1A5	TZ-L5-WWW-3A1_1A5	PTHP	4	8.00	8.00	280	84	0.3	0.150	W/cfm	☒	☒
ZN-L6-IOP-4A1	TZ-L6-IOP-4A1	PTHP	4	9.00	9.00	307	92	0.3	0.150	W/cfm	☒	☒
ZN-L6-QWE-1C3_EAST	TZ-L6-QWE-1C3_EAST	PTHP	1	17.00	17.00	558	167	0.3	0.150	W/cfm	☒	☒
ZN-L6-XXX-1B2_1C3	TZ-L6-XXX-1B2_1C3	PTHP	2	14.00	14.00	468	140	0.3	0.150	W/cfm	☒	☒
ZN-L6-YYY-1A1_2A3_1B3_1B4_1C2	TZ-L6-YYY-1A1_2A3_1B3_1B4_1C2	PTHP	6	11.00	11.00	363	109	0.3	0.150	W/cfm	☒	☒
ZN-L6-ZZZ-1C3_COURT	TZ-L6-ZZZ-1C3_COURT	PTHP	1	18.00	18.00	608	182	0.3	0.150	W/cfm	☒	☒
HP2 L1-PROP_MGMT_SUITE	TZ-L1-PROP_MGMT_SUITE	SZHP	1	34.00	35.00	1200	NA	NA	0.310	W/cfm	☒	☐
HP3-4 L-COMM_WITH_KITCH_LNDRY	TZ-L2-COMM_WITH_KITCH_LNDRY	SZHP	1	35.00	52.00	2070	NA	NA	0.180	W/cfm	☒	☐
HP1 L1-LOBBY	TZ-L1-LOBBY	SZHP	1	34.00	35.00	1200	NA	NA	0.310	W/cfm	☒	☐

H9. ZONAL SYSTEM AND TERMINAL UNIT SUMMARY

1	2	3	4	5	6	7	8	9	10	11	12	13
System ID	Zone Name	System Type	Qty	Rated Capacity (kBtuh)		Airflow (cfm)			Fan			
				Heating	Cooling	Design	Min.	Min. Ratio	Power	Power Units	Cycles	VSD
TU L2-AAA-1B2_1C1	TZ-L2-AAA-1B2_1C1	Uncontrolled	1	NA	NA	111	NA	0.00	1.070	bhp	NA	☐
TU L2-PPP-1A1_1B3_1C2	TZ-L2-PPP-1A1_1B3_1C2	Uncontrolled	1	NA	NA	146	NA	0.00	1.070	bhp	NA	☐
TU L2-QQQ-1A4_1A4.2_1B1	TZ-L2-QQQ-1A4_1A4.2_1B1	Uncontrolled	1	NA	NA	114	NA	0.00	1.070	bhp	NA	☐
TU L2-SSS-1B5_1C1	TZ-L2-SSS-1B5_1C1	Uncontrolled	1	NA	NA	113	NA	0.00	1.070	bhp	NA	☐
TU L2-TTT-3A1_1A2_1B1	TZ-L2-TTT-3A1_1A2_1B1	Uncontrolled	1	NA	NA	177	NA	0.00	1.070	bhp	NA	☐
TU L3-CCC-1B2_1C1	TZ-L3-CCC-1B2_1C1	Uncontrolled	1	NA	NA	111	NA	0.00	1.070	bhp	NA	☐
TU L3-DDD-1B5_1C1	TZ-L3-DDD-1B5_1C1	Uncontrolled	1	NA	NA	113	NA	0.00	1.070	bhp	NA	☐
TU L3-EEE-3A1_1A2_1B1	TZ-L3-EEE-3A1_1A2_1B1	Uncontrolled	1	NA	NA	177	NA	0.00	1.070	bhp	NA	☐
TU L3-MMM-1A1_2A3_1B3_1B4_1C2	TZ-L3-MMM-1A1_2A3_1B3_1B4_1C2	Uncontrolled	1	NA	NA	255	NA	0.00	1.070	bhp	NA	☐
TU L3-RRR-1B1_1C4	TZ-L3-RRR-1B1_1C4	Uncontrolled	1	NA	NA	115	NA	0.00	1.070	bhp	NA	☐
TU L4-FFF-1A1_2A3_1B3_1B4_1C2	TZ-L4-FFF-1A1_2A3_1B3_1B4_1C2	Uncontrolled	1	NA	NA	259	NA	0.00	1.070	bhp	NA	☐
TU L4-HHH-1B5_1C1	TZ-L4-HHH-1B5_1C1	Uncontrolled	1	NA	NA	113	NA	0.00	1.070	bhp	NA	☐
TU L4-LLL-3A1_1A5	TZ-L4-LLL-3A1_1A5	Uncontrolled	1	NA	NA	132	NA	0.00	1.070	bhp	NA	☐
TU L4-III-1C3_COURT	TZ-L4-III-1C3_COURT	Uncontrolled	1	NA	NA	65	NA	0.00	1.070	bhp	NA	☐
TU L4-GGG-1B2_1C1	TZ-L4-GGG-1B2_1C1	Uncontrolled	1	NA	NA	111	NA	0.00	1.070	bhp	NA	☐

H9. ZONAL SYSTEM AND TERMINAL UNIT SUMMARY

1	2	3	4	5	6	7	8	9	10	11	12	13
System ID	Zone Name	System Type	Qty	Rated Capacity (kBtuh)		Airflow (cfm)			Fan			
				Heating	Cooling	Design	Min.	Min. Ratio	Power	Power Units	Cycles	VSD
TU L5-NNN-1A1_2A3_1B3_1B4_1C2	TZ-L5-NNN-1A1_2A3_1B3_1B4_1C2	Uncontrolled	1	NA	NA	259	NA	0.00	1.070	bhp	NA	☐
TU L5-OOO-1B2_1C3	TZ-L5-OOO-1B2_1C3	Uncontrolled	1	NA	NA	111	NA	0.00	1.070	bhp	NA	☐
TU L5-UUU-1C3_COURT	TZ-L5-UUU-1C3_COURT	Uncontrolled	1	NA	NA	65	NA	0.00	1.070	bhp	NA	☐
TU L5-VVV-1C3_EAST	TZ-L5-VVV-1C3_EAST	Uncontrolled	1	NA	NA	62	NA	0.00	1.070	bhp	NA	☐
TU L5-WWW-3A1_1A5	TZ-L5-WWW-3A1_1A5	Uncontrolled	1	NA	NA	132	NA	0.00	1.070	bhp	NA	☐
TU L6-IOP-4A1	TZ-L6-IOP-4A1	Uncontrolled	1	NA	NA	132	NA	0.00	1.070	bhp	NA	☐
TU L6-QWE-1C3_EAST	TZ-L6-QWE-1C3_EAST	Uncontrolled	1	NA	NA	62	NA	0.00	1.070	bhp	NA	☐
TU L6-XXX-1B2_1C3	TZ-L6-XXX-1B2_1C3	Uncontrolled	1	NA	NA	111	NA	0.00	1.070	bhp	NA	☐
TU L6-YYY-1A1_2A3_1B3_1B4_1C2	TZ-L6-YYY-1A1_2A3_1B3_1B4_1C2	Uncontrolled	1	NA	NA	259	NA	0.00	1.070	bhp	NA	☐
TU L6-ZZZ-1C3_COURT	TZ-L6-ZZZ-1C3_COURT	Uncontrolled	1	NA	NA	65	NA	0.00	1.070	bhp	NA	☐
TU L1-FGH-STAIR1_ELEV_TRASH	TZ-L1-FGH-STAIR1_ELEV_TRASH	Uncontrolled	1	NA	NA	171	NA	0.00	0.720	bhp	NA	☐
TU L1-STAIR_2	TZ-L1-STAIR_2	Uncontrolled	1	NA	NA	63	NA	0.00	0.720	bhp	NA	☐
TU L2-LKJ-CORR_STAIR2_ELEC_EAST	TZ-L2-LKJ-CORR_STAIR2_ELEC_EAST	Uncontrolled	1	NA	NA	162	NA	0.00	0.720	bhp	NA	☐
TU L3-DHK-CORR_STAIR2_ELEC_EAST	TZ-L3-DHK-CORR_STAIR2_ELEC_EAST	Uncontrolled	1	NA	NA	162	NA	0.00	0.720	bhp	NA	☐

PYATOK
1611 TELEGRAPH AVE.
SUITE 200
OAKLAND, CA 94612
T. 510.465.7010 | F. 510.465.8575
www.pyatok.com

THE UNITY COUNCIL
1900 FRUITVALE AVE
#2A
OAKLAND, CA 94601

2700 INTERNATIONAL

OAKLAND, CA 94601

STAMP:

LICENSED ARCHITECT
PETER WALLER
C-23551
4/30/2023
STATE OF CALIFORNIA

ISSUE SCHEDULE

100 SD	5/11/22
50 DD	7/15/22
100 DD	9/16/22
50 CD	11/18/22
PERMIT SET	12/09/22

REVISION SCHEDULE

NO.	ISSUE	DATE

JOB NUMBER:	1937
DRAWN BY:	Author
CHECKED BY:	Checker
ISSUE DATE:	12/09/22
SCALE:	
TITLE:	**TITLE 24 REPORT**

SHEET:

G0.56

PRELIMINARY - Not for Construction -

© 2019 PYATOK ARCHITECTURE & URBAN DESIGN

12/8/2022 6:22:25 PM

H9. ZONAL SYSTEM AND TERMINAL UNIT SUMMARY

1	2	3	4	5	6	7	8	9	10	11	12	13
System ID	Zone Name	System Type	Qty	Rated Capacity (kBtuh)		Airflow (cfm)			Fan			
				Heating	Cooling	Design	Min.	Min. Ratio	Power	Power Units	Cycles	VSD
TU L2-YXA-WEST_CORR_ELEV_WASTE_STAIR1	TZ-L2-YXA-WEST_CORR_ELEV_WASTE_STAIR1	Uncontrolled	1	NA	NA	236	NA	0.00	0.720	bhp	NA	☐
TU L3-ERT-WEST_CORR_STAIR1_WASTE_ELEV	TZ-L3-ERT-WEST_CORR_STAIR1_WASTE_ELEV	Uncontrolled	1	NA	NA	302	NA	0.00	0.720	bhp	NA	☐
TU L4-CVB-WEST_STAIR1_ELEV_CORR_WASTE	TZ-L4-CVB-WEST_STAIR1_ELEV_CORR_WASTE	Uncontrolled	1	NA	NA	302	NA	0.00	0.720	bhp	NA	☐
TU L4-RFV-EAST_CORR_STAIR2_ELEC	TZ-L4-RFV-EAST_CORR_STAIR2_ELEC	Uncontrolled	1	NA	NA	162	NA	0.00	0.720	bhp	NA	☐
TU L5-MJU-WEST_WASTE_CORR_STAIR1_ELEV	TZ-L5-MJU-WEST_WASTE_CORR_STAIR1_ELEV	Uncontrolled	1	NA	NA	302	NA	0.00	0.720	bhp	NA	☐
TU L5-MNB-CORR_STAIR2_ELEC_EAST	TZ-L5-MNB-CORR_STAIR2_ELEC_EAST	Uncontrolled	1	NA	NA	162	NA	0.00	0.720	bhp	NA	☐
TU L6-ASD-CORR_STAIR2_ELEC_EAST	TZ-L6-ASD-CORR_STAIR2_ELEC_EAST	Uncontrolled	1	NA	NA	162	NA	0.00	0.720	bhp	NA	☐
TU L6-CGB-WEST_STAIR1_CORR_ELEV_WASTE	TZ-L6-CGB-WEST_STAIR1_CORR_ELEV_WASTE	Uncontrolled	1	NA	NA	302	NA	0.00	0.720	bhp	NA	☐

H9. ZONAL SYSTEM AND TERMINAL UNIT SUMMARY

1	2	3	4	5	6	7	8	9	10	11	12	13
System ID	Zone Name	System Type	Qty	Rated Capacity (kBtuh)		Airflow (cfm)			Fan			
				Heating	Cooling	Design	Min.	Min. Ratio	Power	Power Units	Cycles	VSD
TU SF-7 L1-PROP_MGMT-DOAS	TZ-L1-PROP_MGMT_SUITE	Uncontrolled	1	NA	NA	275	NA	0.00	0.410	W/cfm	NA	☐
TU SF-6 L1-Lobby-DOAS	TZ-L1-LOBBY	Uncontrolled	1	NA	NA	200	NA	0.00	0.410	W/cfm	NA	☐
TU SF-8 L2-COMM_WITH_KITCH_LNDRY	TZ-L2-COMM_WITH_KITCH_LNDRY	Uncontrolled	1	NA	NA	500	NA	0.00	0.250	W/cfm	NA	☐

H10. EVAPORATIVE COOLER SUMMARY

This Section Does Not Apply

H11. HEAT RECOVERY SUMMARY

This Section Does Not Apply

I1. WATER HEATER EQUIPMENT SUMMARY

1	2	3	4	5	6	7	8	9	10	11	12	13	14
Name	Heater Element Type	Tank Type	Qty	Tank Vol (gal)	Rated Input	Rated Input Unit	Efficiency	Efficiency Unit	Tank Insulation R-value (int/Ext)	Standby Loss Fraction	1st Hour Rating or Flow Rate (gal)	Heat Pump Type	Tank Location or Ambient Condition
NonRes Dummy Water Heater	Electricity	Storage	1	36.00	2.5	kW	0.92	UEF	NA	NA	65	NA	NA

I2. MULTI-FAMILY WATER HEATING SYSTEM DETAIL

1	2	3	4	5	6	7	8	9
System Name	Configuration	Type	Qty in System	Multi-Family Distribution Type	Dwelling Unit Distribution Type	Water Heater Name	Solar Heating System	Compact Distribution
ResidentialDHWSystem HPWH1-8	"Domestic Hot Water (DHW)"	Central	8	No Control (continuous pumping)	Standard	ResidentialDHWSystem HPWH1-8 - heater	NA	NA

I3. WATER HEATER EQUIPMENT SUMMARY - CHPWH

1	2	3	4	5	6	7	8
Name	Brand/Model	Number of Compressors	Primary Tank Volume (gal)	Tank Count	Tank R-value	Tank Location	Air Source
ResidentialDHWSystem HPWH1-8	Colmac CxV-5 (10kW cap @ 40F)	8	1200	1	16	Unconditioned Zone	Outside

I4. WATER HEATER EQUIPMENT SUMMARY - CHPWH LOOP TANK

1	2	3	4	5	6	7	8
Tank Type	Brand/Model	Count	Tank Volume (gal)	Tank Count	Tank R-value	Tank Location	Air Source
Electric Resistance	NA	1	50	1	16	Unconditioned Zone	NA

I5. RECIRCULATION LOOPS

1	2	3	4	5	6
Water Heating System Name	Number of Recirculation Loops	Loop Insulation Thickness (in)	Recirculation Loop Location	Recirculation Pump Power	Recirculation Pump Power Units
ResidentialDHWSystem HPWH1-8	1	1.5	Conditioned	187	Watts

J1. ENCLOSED PARKING GARAGES

1	2	3	4	5
Garage Exhaust System Name	Design Exhaust Flow Rate (cfm)	Minimum Exhaust Flow Rate (cfm)	Fan Power (Watts)	CO Control Yes/No
GEF-1-GARAGE	8,000	1,600	1.414	Yes

L. DECLARATION OF REQUIRED CERTIFICATES OF INSTALLATION

Table Instructions: Selections shall be made by Documentation Author to indicate which Certificates of Installation must be submitted for the features to be recognized for compliance. These documents bust be retained and provided to the building inspector during construction and can be found online at: https://www.energy.ca.gov/title24/2019standards/2019_compliance_documents/Nonresidential_Documents/NRCI/

Building Component	Form/Title
Envelope	NRCI-ENV-01-E - Must be submitted for all buildings
Mechanical	NRCI-MCH-01-E - Must be submitted for all buildings
Plumbing	NRCI-PLB-01-E - Must be submitted for all buildings
	NRCI-PLB-02-E - Must be submitted for high-rise residential and hotel/ motel central hot water distribution systems to be recognized for compliance

M. DECLARATION OF REQUIRED CERTIFICATES OF ACCEPTANCE

Table Instructions: Selections shall be made by Documentation Author to indicate which Certificates of Acceptance must be submitted for the features to be recognized for compliance. These documents must be provided to the building inspector during construction and must be completed through an Acceptance Test Technician Certification Provider (ATTCP). For more information visit:https://www.energy.ca.gov/title24/2019standards/2019_compliance_documents/Nonresidential_Documents/NRCA/

Building Component	Form/Title
Covered Process	NRCA-PRC-03-F - Garage Exhaust
Mechanical	NRCA-MCH-02-A Outdoor Air must be submitted for all newly installed HVAC units. Note: MCH02-A can be performed in conjunction with MCH-07-A Supply Fan VFD Acceptance (if applicable) since testing activities overlap
	NRCA-MCH-03-A Constant Volume Single Zone HVAC
	NRCA-MCH-12-A FDD for Packaged Direct Expansion Units
	NRCA-MCH-13-A Automatic FDD for Air Handling Units and Zone Terminal Units Acceptance
	NRCA-MCH-20 Multifamily Ventilation

N. DECLARATION OF REQUIRED CERTIFICATES OF VERIFICATION

Table Instructions: Selections shall be made by Documentation Author to indicate which Certificates of Verification must be submitted for the features to be recognized for compliance. These documents bust be retained and provided to the building inspector during construction and can be found online at: https://www.energy.ca.gov/title24/2019standards/2019_compliance_documents/Nonresidential_Documents/NRCV/

Building Component	Form/Title
Mechanical	NRCV-MCH-27 Indoor Air Quality & Mechanical Ventilation
	NRCV-MCH-32-H Local Mechanical Exhaust

DOCUMENTATION AUTHOR'S DECLARATION STATEMENT

I certify that this Certificate of Compliance documentation is accurate and complete.

Documentation Author Name: Jennifer Love	Signature:
Company: Beyond Efficiency Inc	
Address: PO Box 9279	Signature Date: 2022-11-29
City/State/Zip: Jackson WY 83002	CEA/ HERS Certification Identification (if applicable): R16-16-20076
Phone: 415-236-1333	

RESPONSIBLE PERSON'S DECLARATION STATEMENT

I certify the following under penalty of perjury, under the laws of the State of California:

1. The information provided on this Certificate of Compliance is true and correct.
2. I am eligible under Division 3 of the Business and Professions Code to accept responsibility for the building design or system design identified on this Certificate of Compliance (responsible designer)
3. The energy features and performance specifications, materials, components, and manufactured devices for the building design or system design identified on this Certificate of Compliance conform to the requirements of Title 24, Part 1 and Part 6 of the California Code of Regulations.
4. The building design features or system design features identified on this Certificate of Compliance are consistent with the information provided on other applicable compliance documents, worksheets, calculations, plans and specifications submitted to the enforcement agency for approval with this building permit application.
5. I will ensure that a completed signed copy of this Certificate of Compliance shall be made available with the building permit(s) issued for the building, and made available to the enforcement agency for all applicable inspections. I understand that a completed signed copy of this Certificate of Compliance is required to be included with the documentation the builder provides to the building owner at occupancy.

Responsible Envelope Designer Name:	Signature:	
Company: Pyatok		
Address: 1611 Telegraph Ave. Suite 200	Date Signed: 12/02/2022	
City/State/Zip: Oakland CA 94612		
Phone: 510-465-7010	Title: Architect	License #:23551
Responsible Lighting Designer Name:	Signature: NOT IN SCOPE	
Company:		
Address:	Date Signed:	
City/State/Zip:		
Phone:	Title:	License #:
Responsible Mechanical Designer Name: Massamaghan Kone, P.E.	Signature:	
Company: Emerald City Engineers		
Address: 21705 Highway 99	Date Signed: 12/01/22	
City/State/Zip: Lynnwood WA 98036		
Phone: 425-741-1200	Title: Engineer	License #: M-38848

PYATOK
1611 TELEGRAPH AVE.
SUITE 200
OAKLAND, CA 94612
T. 510.465.7010 | F. 510.465.8575
www.pyatok.com

THE UNITY COUNCIL
1900 FRUITVALE AVE
#2A
OAKLAND, CA 94601

2700 INTERNATIONAL

OAKLAND, CA 94601

STAMP:

LICENSED ARCHITECT
PETER WALLER
C-23551
4/30/2023
STATE OF CALIFORNIA

ISSUE SCHEDULE

100 SD	5/11/22
50 DD	7/15/22
100 DD	9/16/22
50 CD	11/18/22
PERMIT SET	12/09/22

REVISION SCHEDULE

NO.	ISSUE	DATE

JOB NUMBER:	1937
DRAWN BY:	Author
CHECKED BY:	Checker
ISSUE DATE:	12/09/22
SCALE:	
TITLE:	

TITLE 24 REPORT

SHEET:

G0.57

PRELIMINARY - Not for Construction -

© 2019 PYATOK ARCHITECTURE & URBAN DESIGN

12/8/2022 6:22:28 PM

DEMOLITION NOTES

1. CONTRACTOR TO OBTAIN AN ENGINEERING/ENCROACHMENT PERMIT FOR ALL WORK PERFORMED IN THE PUBLIC RIGHT OF WAY.
2. ALL DEMOLITON WORK TO BE CONFORM TO THE STANDARDS AND SPECIFICATIONS OF THE CITY OF OAKLAND. NO DIRT, SEDIMENT, CONSTRUCTION DEBRIS, SAWCUTTING SLURRY, OR OTHER MATERIAL, MAY BE LEFT ON CITY SIDEWALK OR STREETS. CONTRACTOR SHALL MAINTAIN AND CLEAN ALL SUCH MATERIALS FROM SIDEWALKS AND STREETS AT THE END OF THE WORKING DAY.
3. CONTRACTOR SHALL COMPLY WITH BEST MANAGEMENT PRACTICES WITH REGARD TO PREVENTING STORM DRAIN POLLUTION. EXAMPLE PRACTICES ARE INDICATED ON THE POLLUTION PREVENTION PLAN SHEET, SHEET C4.0, HEREBY INCORPORATED INTO THE PROJECT PLANS. NO POLLUTION, SEDIMENT, OR DEBRIS FROM THE SITE MAY ENTER THE STORM DRAIN SYSTEM; ONLY CLEAN RAINWATER MAY ENTER.
4. CONTRACTOR SHALL CONTACT UNDERGROUND SERVICE ALERT, 811 OR (800) 227-2600 PRIOR TO ANY EXCAVATION OR DIGGING.
5. CONTRACTOR SHALL PROTECT ALL EXISTING PUBLIC AND PRIVATE UTILITIES TO REMAIN IN PLACE DURING CONSTRUCTION ACTIVITIES.
6. BAY AREA AIR QUALITY MANAGEMENT DISTRICT (BAAQMD) NOTIFICATION IS REQUIRED FOR EVERY DEMOLITION. NOTIFICATION SHALL BE PROVIDED TO THE DISTRICT AT LEAST 10 WORKING DAYS PRIOR TO THE COMMENCEMENT OF DEMOLITION. OBTAIN A JOB (J#) FROM BAAQMD. A COPY OF THE J# ACKNOWLEDGEMENT LETTER FROM BAAQMD IS REQUIRED PRIOR TO ISSUANCE OF A PERMIT.
7. CONTRACTOR TO REFER TO THE FOLLOWING APPLICABLE SECTIONS OF CBC CHAPTER 33 FOR SAFEGUARDS AND FIRE SAFETY DURING CONSTRUCTION AND DEMOLITION ACTIVITES AT THE SITE: 3303, 3306, 3307, 3308, 3309, 3310 & 3312.
8. BUILDING UTILITY DEMOLITION:
   A. COORDINATE ALL GAS & ELECTRICAL REMOVAL WITH PG&E.
   B. REMOVE/CAP EXISTING SANITARY SEWER PER THE REQUIREMENTS OF THE CITY OF OAKLAND/EBMUD.
   C. CAP EXISTING UNDERGROUND ROOF DRAINS.
   D. CAP EXISTING DOMESTIC WATER LINE.
9. DEMOLITION OF THE EXISTING BUILDINGS REQUIRES THE COMPLETION OF THE PCBs SCREENING ASSESSMENT FORM AS PART OF A WATER QUALITY PROGRAM IN ACCORDANCE WITH THE BAY AREA REGIONAL STORMWATER NPDES PERMIT.

DEMOLITION WORK LEGEND

1. REMOVE EXISTING BUILDING FOUNDATIONS, ETC, IN ITS ENTIRETY, PER BUILDING CODE.
2. REMOVE EXISTING CONCRETE & ASPHALT CONCRETE PAVEMENT BASEROCK. REMOVE ALL MISCELLANEOUS UNDERGROUND CONCRETE, FENCING, CONCRETE POLE BASES AND ALL OTHER MISCELLANEOUS ITEMS.
3. EXISTING TREE TO REMAIN. PROTECT IN PLACE DURING DEMOLITION & CONSTRUCTION ACTIVITIES.
4. REMOVE EXISTING GAS METERS & APPURTENANT GAS PIPING; CAP AT PROPERTY LINE. COORDINATE GAS METER & PIPING REMOVAL WITH PG&E. ALL DEMOLITION WORK TO BE PERFORMED IN ACCORDANCE WITH THE RULES AND REGULATIONS OF PG&E GREEN BOOK.
5. COORDINATE WITH EBMUD REGARDING CAPPING THE EXISTING WATER SERVICE AND REMOVAL OF THE EXISTING WATER METER.
6. EXISTING PARKING SIGNS AND POLES TO BE REMOVED AND RETURNED TO THE CITY.
7. EXISTING SIGNS TO REMAIN.
8. EXISTING PARKING METER TO BE REMOVED BY THE CITY OF OAKLAND. SEE PARKING METER NOTE ON SHEET C1.01.
9. EXISTING PARKING METER TO BE REMOVED BY THE CITY OF OAKLAND. SEE PARKING METER NOTE ON SHEET C1.01.
10. AN ENGINEERING PERMIT WILL BE REQUIRED FOR SEWER CAPPING. THE LOWER LATERAL SHALL BE CAPPED AT THE POINT AT WHICH IT ENTERS THE MAIN. EXISTING SANITARY SEWER LATERAL TO BE REMOVED PER CITY OF BERKELEY REQUIREMENTS:

   A) IF THE LATERAL ENTERS THE MAIN BY MEANS OF A FACTORY MANUFACTURED WYE OR TEE BRANCH, AND IF THE MAIN AND WYE OR TEE BRANCH ARE IN GOOD, UNDAMAGED CONDITION, THE LATERAL SHALL BE DISCONNECTED AND THE BRANCH SHALL BE PLUGGED WITH AN EXPANDABLE NEOPRENE RUBBER PLUG AT THE MAIN. THE BRANCH PLUG SHALL BE ENCLOSED WITH A MINIMUM THICKNESS OF 6" OF 6 SACK, 3/4" SIZE AGGREGATE, PORTLAND CEMENT CONCRETE. THE WYE BRANCH WITH RUBBER PLUG MUST BE INSPECTED AND APPROVED BY AN ENGINEERING INSPECTOR PRIOR TO ENCLOSURE WITH CONCRTE AND BACKFILL OF THE TRENCH.

   OR B) IF THE LATERAL ENTERS THE MAIN BY ANY METHOD OTHER THAN BY A FACTORY WYE OR TEE BRANCH, OR IF THE EXISTING MAIN, WYE OR TEE BRANCH IS DAMAGED IN ANY WAY, THE SECTION OF MAIN CONTAINING THE LATERAL ENTRY OPENING SHALL BE REMOVED AND REPLACED WITH A NEW SECTION OF PIPE OF THE SAME DIAMETER AS THE EXISTING MAIN. AN ENGINEERING INSPECTOR MUST INSPECT THE NEW MAIN SECTION BEFORE BACKFILL.

   C) THE ABANDONED LATERAL PIPE SHALL BE FILLED WITH SAND AND JETTED TO PREVENT THE PIPE FROM BECOMING A HOME FOR RODENTS OR OTHER DISEASE VECTORS.

CITY OF OAKLAND NOTE
AN ENGINEERING PERMIT WILL BE REQUIRED FOR ANY WORK IN THE PUBLIC RIGHT-OF WAY, INCLUDING BUT NOT LIMITED TO CONSTRUCTION STAGING RESERVED CONSTRUCTION PARKING, SIDEWALK, UTILITY, DRAINAGE, OR SEWER WORK. THE ENGINEERING PERMIT CAN BE ISSUED AFTER THE BUILDING PERMIT IS APPROVED AND ISSUED. APPROVAL OF THIS BUILDING PERMIT DOES NOT AUTHORIZE WORK IN THE PUBLIC RIGHT-OF-WAY.

DEMOLITION LEGEND

- DEMOLISH EXISTING BUILDINGS (2 TOTAL) = 8,980± SQUARE FEET
- SAWCUT & REMOVE EXISTING PUBLIC IMPROVEMENTS (CONCRETE CURB, GUTTER, SIDEWALK AND 12" WIDE ASPHALT CONCRETE PAVEMENT & BASE ROCK IN CONFLICT WITH THE NEW WORK = 8,600± SQ. FEET. PROTECT IN PLACE ALL EXISTING UTILITY BOXES, TREES, FIRE HYDRANTS, UTILITY POLES, SIGNS, STREET LIGHTS, TRAFFIC SIGNAL POLES, ETC. TO REMAIN.
- REMOVE ALL CONCRETE & ASPHALT CONCRETE PAVEMENT, AGGREGATE BASE, LANDSCAPE IMPROVEMENTS AND SUBGRADE MATERIAL TO REQUIRED DEPTH TO INSTALL NEW IMPROVEMENTS. REMOVE ALL EXISTING UTILITY BOXES, CONDUITS, ETC., IN CONFLICT WITH THE NEW IMPROVEMENTS. REMOVE & DEMOLISH ALL ABANDONED UTILITIES OR AS DIRECTED BY THE GEOTECHNICAL ENGINEER.
- REMOVE EXISTING TREE, INCLUDING ROOT BALL

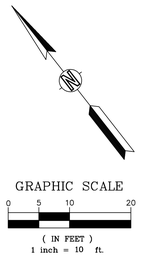

UTILITY LINE LEGEND

GAS LINE	GAS
TELEPHONE	UG/TEL
ELECTRIC	UG/E
STREET LIGHT	SL
OVERHEAD UTIL.	OH UTIL
SANITARY	SS
STORM	SD
WATER	WL
UNKNOWN	UNK

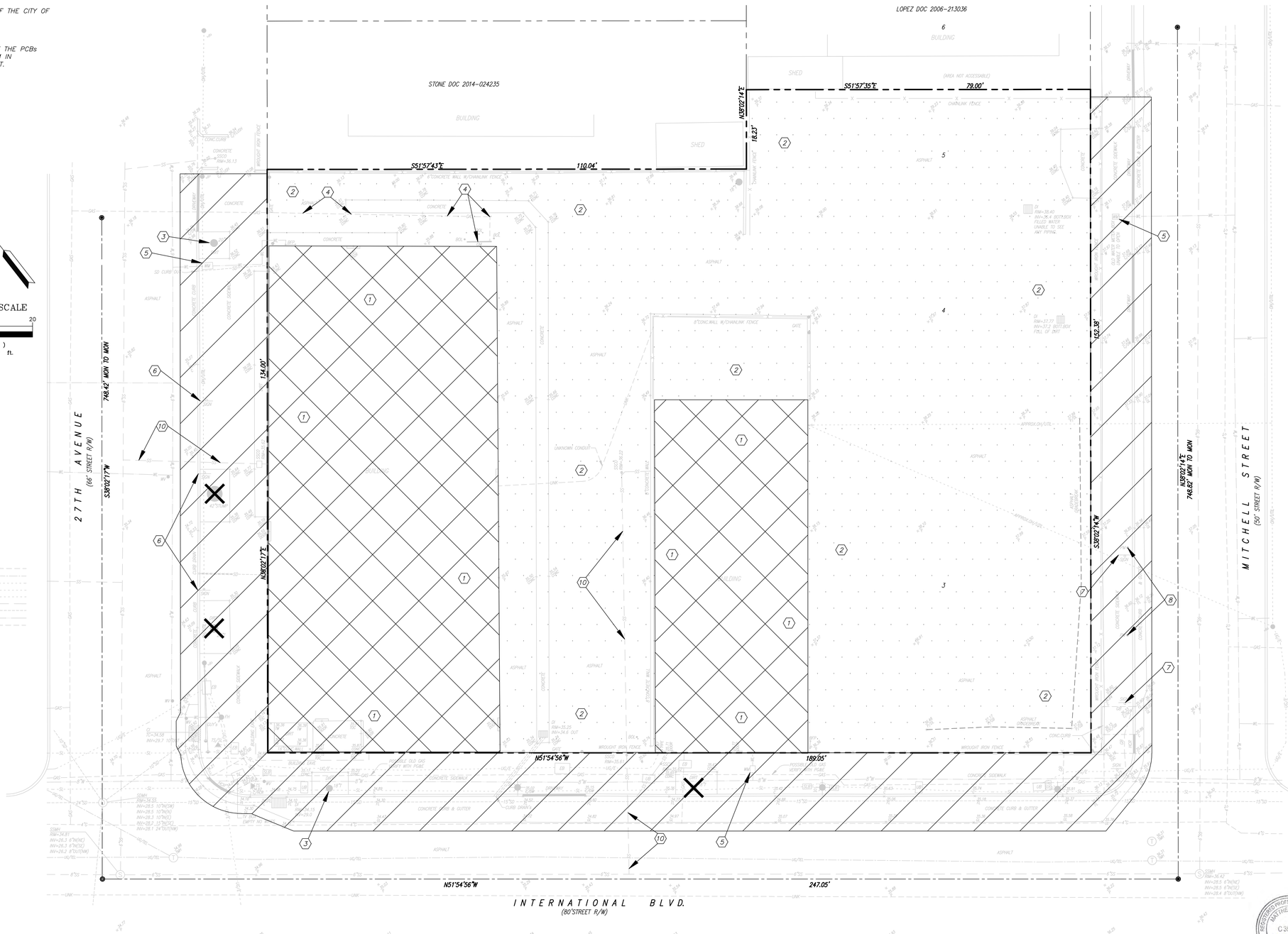

PYATOK
1611 TELEGRAPH AVE.
SUITE 200
OAKLAND, CA 94612
T. 510.465.7010 | F. 510.465.8575
www.pyatok.com

THE UNITY COUNCIL
1900 FRUITVALE AVE
#2A
OAKLAND, CA 94601

LAND SURVEYING & CIVIL ENGINEERING
KISTER, SAVIO & REI
825 SAN PABLO, CA
PINOLE, CA 94564

2700 INTERNATIONAL

OAKLAND, CA 94601

STAMP:

REGISTERED PROFESSIONAL ENGINEER
MATTHEW L. REI
C 38663
CIVIL
STATE OF CALIFORNIA
Exp. 12/31/23

ISSUE SCHEDULE

100 SD	5/11/22
50 DD	7/15/22
100 DD	9/16/22
50 CD	11/18/22
PERMIT SET	12/09/22

REVISION SCHEDULE

NO.	ISSUE	DATE

JOB NUMBER:	1937
DRAWN BY:	MLR
CHECKED BY:	MLR
ISSUE DATE:	12/09/2022
SCALE:	1"=10'

TITLE:
CIVIL DEMOLITION PLAN

SHEET:
C0.00

PRELIMINARY - Not for Construction

© 2019 PYATOK ARCHITECTURE & URBAN DESIGN

GENERAL NOTES

1. THE LOCATIONS OF UNDERGROUND UTILITIES AS SHOWN HEREON ARE BASED ON ABOVE GROUND STRUCTURES AND UTILITY SURVEY BY GEOTECT UTILITY LOCATORS. LOCATIONS OF UNDERGROUND UTILITIES/STRUCTURES MAY VARY FROM LOCATIONS SHOWN HEREON. ADDITIONAL BURIED UTILITIES/STRUCTURES MAY BE ENCOUNTERED. NO EXCAVATIONS WERE MADE DURING THIS SURVEY TO LOCATE BURIED UTILITIES/STRUCTURES.

2. CONTRACTORS AND OTHERS PERFORMING WORK SHALL VERIFY THE EXACT LOCATION AND DEPTH OF ALL UNDERGROUND UTILITIES.

3. BASIS OF BEARINGS: THE BEARING N38°02'14"E BETWEEN TWO FOUND MONUMENTS ON MITCHELL STREET ~~HELD GPS COORDINATE OBSERVATIONS, CALIFORNIA STATE PLANE, ZONE III, NAD 83 (CCS83).~~

4. BENCHMARK: CITY OF OAKLAND MONUMENT 19 NE 10, CITY OF OAKLAND BRASS PIN MONUMENT UNDER STANDARD CASING IN THE INTERSECTION OF 47TH AVENUE AND BOND STREET. ELEVATION = 29.65'. CITY OF OAKLAND DATUM.

5. SPRINKLER HEADS AND IRRIGATION LINES ARE NOT SHOWN HEREON.

6. AN EASEMENT GRANTED TO THE PACIFIC TELEPHONE AND TELEGRAPH COMPANY RECORDED JANUARY 9, 1984, SERIAL NUMBER 84-004119 IS BLANKET IN NATURE, AND ENCUMBERS PARCEL ONE. THE EXACT LOCATION OF THE EASEMENT IS NOT DEFINED OF RECORD.

GRAPHIC SCALE
0 5 10 20
(IN FEET)
1 inch = 10 ft.

LEGEND

T	= TREE (APPROX. DIA. @ BREAST HEIGHT)
AD	= AREA DRAIN
AP	= ANGLE POINT
BC	= BUILDING CORNER
BFP	= BACK FLOW PREVENTER
BL	= BUILDING LINE
BOL	= BOLLARD
BW	= BOTTOM OF WALL
C	= TOP OF CURB
CB	= CATCH BASIN
CL	= CENTER LINE
COL	= COLUMN
CONC	= CONCRETE
DI	= DRAIN INLET
DL	= DAYLIGHT
DW	= DRIVEWAY
E/	= EDGE OF
EB	= ELECTRIC BOX
EP	= EDGE OF PAVEMENT
F	= FENCE
FDC	= FIRE DEPARTMENT CONNECTION
FF	= FINISH FLOOR
FH	= FIRE HYDRANT
FL	= FLOW LINE
--G--	= GAS LINE
GB	= GRADE BREAK
GL	= GUTTER LIP
GM	= GAS METER
GP	= GATE POST
GR	= GROUND ELEVATION
GUY	= GUY WIRE
GV	= GAS VALVE
HB	= HOSE BIB
HCR	= HANDICAP RAMP
INV	= INVERT
JP	= JOINT POLE
JP/C	= JOINT POLE W/CONDUIT
MH	= MAN HOLE
P	= PAVEMENT
PP	= POWER POLE
PBB	= PACIFIC BELL BOX
PGE	= PACIFIC GAS AND ELECTRIC
PLNTR	= PLANTER
POC	= POINT ON CURVE
RET	= RETURN
RMP	= RAMP
R/W	= RIGHT OF WAY
S	= SIGN
--SD--	= STORM DRAIN LINE
SDMH	= STORM DRAIN MANHOLE
SL	= STREET LIGHT
SLB	= STREET LIGHT BOX
--SS--	= SANITARY SEWER LINE
SSMH	= SANITARY SEWER MANHOLE
SSCO	= SANITARY SEWER CLEAN OUT
STR	= STAIRS
T	= TOP OF SLOPE
t	= TOE OF SLOPE
--TEL--	= UNDERGROUND TELEPHONE LINE
--T/E--	= OVERHEAD TELEPHONE & ELECTRIC
TOC	= TOP OF CONCRETE
TW	= TOP OF WALL
UB	= UTILITY BOX
VD	= V-DITCH
VG	= VALLEY GUTTER
W	= BACK OF WALK
--WL--	= WATER LINE
WLK	= WALK
WM	= WATER METER
WV	= WATER VALVE

UTILITY LINE LEGEND

GAS LINE	--GAS--
TELEPHONE	--UG/TEL--
ELECTRIC	--UG/E--
STREET LIGHT	--SL--
OVERHEAD UTIL.	--OH UTIL--
SANITARY	--SS--
STORM	--SD--
WATER	--WL--
UNKNOWN	--UNK--

NOTE: CONTOURS BY INTERPOLATION, APPROXIMATE ONLY.

REFERENCES
FIELD BOOK No.
FILE MAP:
TITLE CO.:
POLICY No.:
DATUM: ~~NAD 83~~, CITY OF OAKLAND
MSC. REF.: 19714 NAVD88 to C.o.B DATUM.

REVISIONS
05/27/2022 MOVED COORDINATE POINT OF ORIGIN, TO THE SW PROPERTY CORNER, PER PYATOK.
06/13/2022 REVISED ELEV. PTS 10422-10450, -5.64'.
10/4/2022 REVISED EXISTING UTILITY SIZES

KISTER, SAVIO & REI, INC.
LAND SURVEYORS - CIVIL ENGINEERS
825 SAN PABLO AVENUE
PINOLE, CALIFORNIA 94564
PHONE: (510) 222-4020 FAX: (510) 222-3718
E-MAIL info@ksrinc.net

FOR: THE UNITY COUNCIL
SCALE: 1" = 10' JOB No. 20204
DATE: 07/30/2020 DWG No. X-4230 rev orgin

DESCRIPTION
BOUNDARY & TOPOGRAPHIC SURVEY
2700 INTERNATIONAL BLVD.
OAKLAND, CALIFORNIA

C:\Share\KSR CIVIL ENGINEERING\P FOLDER\20204\DWGS\SURVEY\C0.01-221116.dwg 11/16/22

PYATOK
1611 TELEGRAPH AVE.
SUITE 200
OAKLAND, CA 94612
T. 510.465.7010 | F. 510.465.857
www.pyatok.com

THE UNITY COUNCIL
1900 FRUITVALE AVE
#2A
OAKLAND, CA 94601

LAND SURVEYING & CIVIL ENGINEERING
KISTER, SAVIO & REI
825 SAN PABLO, CA
PINOLE, CA 94564

2700 INTERNATIONAL
OAKLAND, CA 94601

STAMP:

ISSUE SCHEDULE

100 SD	5/1
50 DD	7/1
100 DD	9/1
50 CD	11/

REVISION SCHEDULE

NO.	ISSUE	DATE

JOB NUMBER: 1937
DRAWN BY: MLR
CHECKED BY: MLR
ISSUE DATE: 12/09/2022
SCALE: 1"=10'
TITLE: BOUNDARY & TOPOGRAPHIC SURVEY

SHEET:
C0.01

PRELIMINARY - Not for Construc

© 2019 PYATOK ARCHITECTURE & URBAN DESIGN

NEW CIVIL WORK LEGEND

1. EXISTING CONCRETE CURB, GUTTER & SIDEWALK/DRIVEWAY TO REMAIN.
2. EXISTING ASPHALT CONCRETE PAVEMENT TO REMAIN. NOTE, AFTER ALL UTILITY CONNECTIONS AND MAJORITY OF PROJECT CONSTRUCTION IS COMPLETE, PROVIDE 2" GRIND AND ASPHALT CONCRETE OVERLAY TO ROADWAY CENTERLINE AND AS SHOWN ON THIS PLAN. ACTUAL LIMITS OF GRIND AND OVERLAY MAY BE MODIFIED IN FIELD BY CITY INSPECTOR AS CONDITIONS WARRANT. NOTE: INTERNATIONAL BLVD. MAY BE UNDER AN EXCAVATION MORATORIUM.
3. INSTALL TREE PLANTERS ON 27TH AVENUE; FIVE TOTAL, SIZE AS SHOWN. SEE LANDSCAPE PLANS FOR MORE INFORMATION.
4. INSTALL TREE PLANTERS ON INTERNATIONAL BOULEVARD; FOUR TOTAL, SIZE AS SHOWN. SEE LANDSCAPE PLANS FOR MORE INFORMATION.
5. INSTALL TREE PLANTERS ON MITCHELL STREET; SIX TOTAL, SIZE AS SHOWN. SEE LANDSCAPE PLANS FOR MORE INFORMATION.
6. SAWCUT AND REMOVE EXISTING PUBLIC IMPROVEMENTS (CONCRETE CURB, GUTTER, SIDEWALK & 24" OF ASPHALT CONCRETE AND TREE STUMPS ALONG THE ENTIRE PROPERTY FRONTAGE OF 27TH AVENUE, INTERNATIONAL BOULEVARD AND MITCHELL STREET. PROTECT EXISTING TREES TO REMAIN (ONE ON 27TH AVENUE & ONE ON INTERNATIONL BOULEVARD. INSTALL STANDARD CITY OF OAKLAND TYPE "A" CONCRETE CURB, GUTTER AND SIDEWALK ON 27TH AVENUE AND MITCHELL STREET PER STANDARD DETAIL S-1. INSTALL STANDARD CITY OF OAKLAND TYPE "C" CONCRETE CURB, GUTTER AND SIDEWALK ON INTERNATIONAL BOULEVARD PER STANDARD DETAIL S-1; MAINTAIN EXISTING CURB ALIGNMENT. NEW PUBLIC IMPROVEMENTS TO CONFORM TO EXISTING PUBLIC IMPROVEMENTS AT CONFORM LINE. PROTECT EXISTING UTILITY BOXES & STREET LIGHT POLES TO REMAIN IN PLACE AND ADJUST TO NEW GRADES. SEE LANDSCAPE ARCHITECT DRAWING L2.01 FOR SURFACE TREATMENT OF PUBLIC SIDEWALK.
7. INSTALL STANDARD CITY OF OAKLAND CONCRETE DRIVEWAY PER STANDARD DETAIL S-2.
8. INSTALL 6" THICK, MINIMUM, CONCRETE DRIVEWAY, UTILIZING THE CITY OF OAKLAND STANDARD DRIVEWAY DETAIL, S-2.
9. NEW ON-SITE CONCRETE WALKWAY TO MATCH STRUCTURAL SECTION AND DESIGN OF PUBLIC SIDEWALK. SEE NEW CIVIL WORK LEGEND NOTE #6 ABOVE AND LANDSCAPE ARCHITECT DRAWING L2.01 FOR SURFACE TREATMENT.
10. SAWCUT & REMOVE 24" (MIN.) WIDE EXISTING ASPHALT CONCRETE PAVEMENT AND BASEROCK. INSTALL FULL DEPTH ASPHALT CONCRETE (9" THICK, MIN.). VERIFY NEW ASPHALT CONCRETE PAVEMENT CROSS SLOPE IS 1% MINIMUM. NOTE, UPPER COURSE OF PAVEMENT RESTORATION (TOP 2" OF AC) OR AC OVERLAY SHALL BE 1/2" AGGREGATE, TYPE C2 MIX FROM TABLE 203-6.4.3 OF THE GREENBOOK, PG 64-10, WITH 15% RAP. BOTTOM SOURSES SHALL BE 3/4" AGGREGATE, TYPE C2 MIX, TABLE 203-6.4.3 OF THE GREENBOOK, PG 64-10, WITH 15% RAP.
11. INSTALL PEDESTRIAN CURB RAMP. SEE DETAIL ON SHEET C1.01.
12. INSTALL NEW CONCRETE CURB & GUTTER AROUND EXISTING CURB INLET TO REMAIN; SIMILAR TO A STANDARD CITY OF OAKLAND TYPE "B" INLET PER PER STANDARD DETAIL D-4.
13. INSTALL NEW CONCRETE CURB & GUTTER AROUND EXISTING STORM DRAIN TO REMAIN (WITH NO CURB INLET); SIMILAR TO A STANDARD CITY OF OAKLAND TYPE "D" INLET PER STANDARD DETAIL D-6.
14. UNDERGROUND TRANSFORMER VAULT. SEE JOINT TRENCH/ELECTRICAL PLANS FOR MORE INFORMATION.
15. EXISTING PARKING METER (2 TOTAL) ON MITCHELL STREET TO BE REMOVED AND RETURNED TO THE CITY OF OAKLAND.
16. NEW BIORETENTION FACILITY. SEE DETAILS ON SHEET C4.01.

NOTE:
THE FOLLOWING NEW OR REPLACEMENT ITEMS TO BE APPROVED BY DEPARTMENT OF TRANSPORTATION (DOT) – SAFE STREETS:

1) CURB MARKINGS
2) TRAFFIC & PARKING SIGNS WITH ANTI-GRAFFITI SHEETING
3) TRAFFIC STRIPING AND MARKINGS INCLUDING BICYCLE DELINEATION, IF ANY, IN THERMOPLASTIC
4) PARKING STRIPING AND PARKING T's IN THERMOPLASTIC

DESIGNER'S STATEMENT

THIS PLOT PLAN CORRECTLY REPRESENTS A PLOT PLAN MADE BY ME OR UNDER MY DIRECTION.

I HEREBY STATE THAT TO THE BEST OF MY KNOWLEDGE ALL PROVISIONS OF APPLICABLE STATE LAWS AND LOCAL ORDINANCES HAVE BEEN COMPLIED WITH.

I HEREBY FURTHER STATE THAT ALL PROPOSED GRADES, ELEVATIONS AND CONTOURS DELINEATED UPON THIS PLOT PLAN ARE BASED UPON A SURVEY BY KISTER, SAVIO & REI, INC., P.L.S. 8178, DATED JULY 30, 2020, THAT WAS INDICATED THEREON BY THE SURVEYOR THEREOF AS BEING BASED UPON CITY OF OAKLAND DATUM.

REGISTERED PROFESSIONAL ENGINEER
MATTHEW L. PIATT
C 38863
CIVIL
STATE OF CALIFORNIA

Exp. 12/31/23

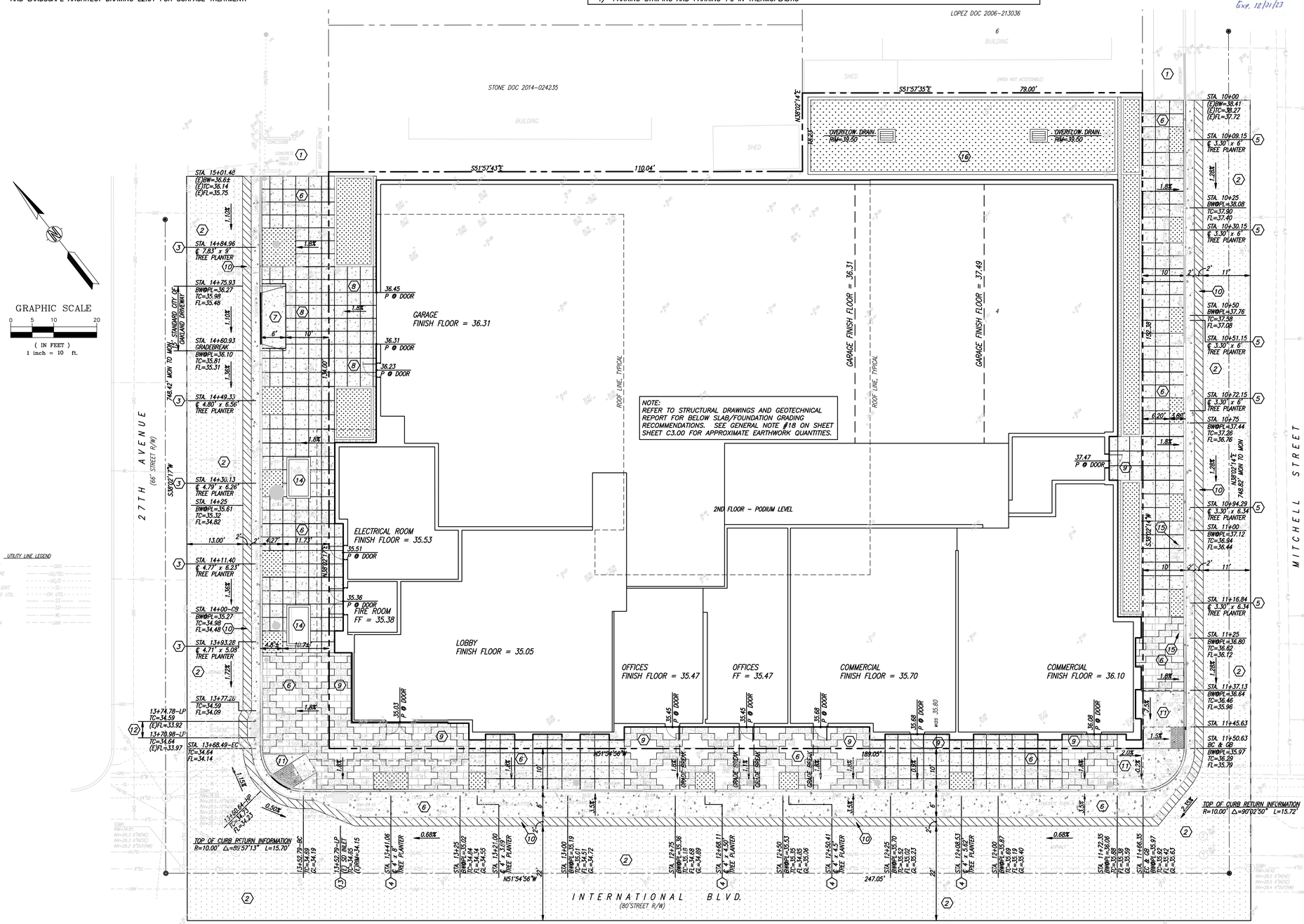

NEW CIVIL LEGEND

- GRIND & OVERLAY EXISTING ASPHALT CONCRETE PAVEMENT
- NEW PUBLIC IMPROVEMENTS; CONCRETE PAVERS IN PUBLIC SIDEWALK
- NEW PUBLIC IMPROVEMENTS; CONCRETE CURB, GUTTER & SIDEWALK
- NEW TREE WELL LOCATION
- CONCRETE FLOW-THROUGH PLANTER BIORETION FACILITY
- NEW FULL DEPTH ASPHALT CONCRETE PAVEMENT
- NEW PEDESTRIAN RAMP WITH DETECTABLE WARNING SURFACE
- NEW OVERFLOW AREA DRAIN

UTILITY LINE LEGEND

GAS LINE — GAS
TELEPHONE — UG/TEL
ELECTRIC — UG/E
STREET LIGHT — SL
OVERHEAD UTIL — OH UTIL
SANITARY — SS
STORM — SD
WATER — WL
UNKNOWN — UNK

PYATOK
1611 TELEGRAPH AVE.
SUITE 200
OAKLAND, CA 94612
T. 510.465.7010 | F. 510.465.8575
www.pyatok.com

THE UNITY COUNCIL
1900 FRUITVALE AVE
#2A
OAKLAND, CA 94601

LAND SURVEYING & CIVIL ENGINEERING
KISTER, SAVIO & REI
825 SAN PABLO, CA
PINOLE, CA 94564

2700 INTERNATIONAL

OAKLAND, CA 94601

STAMP:

ISSUE SCHEDULE

100 SD	5/11/22
50 DD	7/15/22
100 DD	9/16/22
50 CD	11/18/22
PERMIT SET	12/09/22

REVISION SCHEDULE

NO.	ISSUE	DATE

JOB NUMBER:	1937
DRAWN BY:	MLR
CHECKED BY:	MLR
ISSUE DATE:	12/09/2022
SCALE:	1"=10'

TITLE:
CIVIL SITE & PUBLIC IMPROVEMENTS PLAN

SHEET:
C1.00

PRELIMINARY - Not for Construction

© 2018 PYATOK ARCHITECTURE & URBAN DESIGN

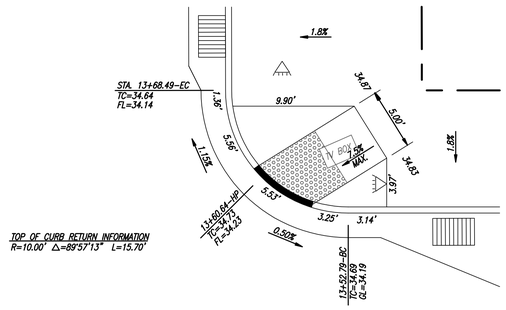

TOP OF CURB RETURN INFORMATION
R=10.00' Δ=89°57'13" L=15.70'

PEDESTRIAN RAMP @ N/W CORNER
SCALE: 1"=5'

NOTE: REFER TO CALTRANS STANDARD DETAIL A88A ON SHEET C5.00 FOR ADDITIONAL NOTES. CONTRACTOR TO MODIFY GEOMETRY AND SLOPES AS REQUIRED

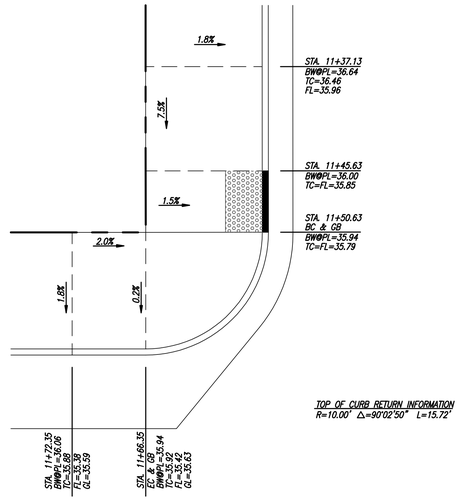

TOP OF CURB RETURN INFORMATION
R=10.00' Δ=90°02'50" L=15.72'

PEDESTRIAN RAMP @ S/W CORNER
SCALE: 1"=5'

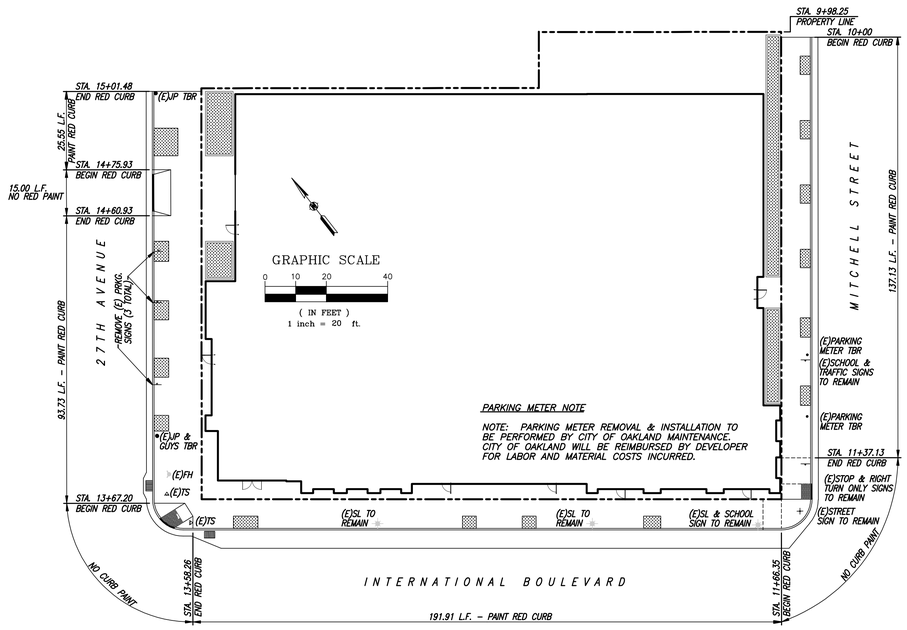

PARKING METER NOTE

NOTE: PARKING METER REMOVAL & INSTALLATION TO BE PERFORMED BY CITY OF OAKLAND MAINTENANCE. CITY OF OAKLAND WILL BE REIMBURSED BY DEVELOPER FOR LABOR AND MATERIAL COSTS INCURRED.

SIGNAGE & STRIPING PLAN
SCALE: 1"=10'

PYATOK
1611 TELEGRAPH AVE.
SUITE 200
OAKLAND, CA 94612
T. 510.465.7010 | F. 510.465.8575
www.pyatok.com

THE UNITY COUNCIL
1900 FRUITVALE AVE
#2A
OAKLAND, CA 94601

LAND SURVEYING & CIVIL ENGINEERING
KISTER, SAVIO & REI
825 SAN PABLO, CA
PINOLE, CA 94564

2700 INTERNATIONAL
OAKLAND, CA 94601

STAMP:

ISSUE SCHEDULE

100 SD	5/11/22
50 DD	7/15/22
100 DD	9/16/22
50 CD	11/18/22
PERMIT SET	12/09/22

REVISION SCHEDULE

NO.	ISSUE	DATE

JOB NUMBER:	1937
DRAWN BY:	MLR
CHECKED BY:	MLR
ISSUE DATE:	12/09/2022
SCALE:	AS SHOWN

TITLE:
CIVIL SIGNAGE & STRIPING PLAN

SHEET:
C1.01

PRELIMINARY - Not for Construction

REGISTERED PROFESSIONAL ENGINEER
MATTHEW L. REI
C 38663
CIVIL
STATE OF CALIFORNIA
Exp. 12/31/23

© 2016 PYATOK ARCHITECTURE & URBAN DESIGN

NEW CIVIL UTILITY WORK LEGEND

(1) EXISTING 2" DOMESTIC WATER METER, TAP & LATERAL (2700 INTERNATIONAL BLVD.) & 5/8" DOMESTIC WATER METER, TAP & LATERAL (2716 INTERNATIONAL BLVD.) TO BE REMOVED BY EBMUD. NOTE, EXISTING WATER METER BOX AT 1415 MITCHELL STREET DOES NOT CONTAIN A WATER METER. CONTRACTOR TO REMOVE BOX. EBMUD TO REMOVE TAP & LATERAL.

(2) NEW 4" DOMESTIC WATER METER (4'x6' WATER METER, TAP & LATERAL TO BE INSTALLED BY EBMUD. PER PLUMBING CONSULTANT, TOTAL DEMAND FOR DOMESTIC WATER IS 195 GPM. REFER TO PLUMBING DRAWINGS FOR BACKFLOW PREVENTER LOCATED INSIDE THE BUILDING.

(3) THREE PROPOSED COMMERICAL WATER METERS, TAPS & LATERALS TO BE INSTALLED BY EBMUD. WATER METER SIZING TO BE BASED ON NEW SERVICE APPLICATIONS. REFER TO PLUMBING DRAWINGS FOR BACKFLOW PREVENTERS TO BE LOCATED INSIDE THE BUILDING.

(4) EBMUD TO INSTALL NEW 6" FIRE SERVICE TAP AND NEW METER ASSEMBLY, INCLUDING A DETECTOR CHECK VALVE. CONTRACTOR TO INSTALL 6" FIRE LINE TO RISER INSIDE BUILDING, INCLUDING A DOUBLE CHECK VALVE ASSEMBLY (DCA) ON THE RISER. EBMUD TO VERIFY INSTALLATION OF DCA. THE INSTALLATION OF THE UNDERGROUND FIRE LINE/UNDERGROUND PIPING AND ASSOCIATED WORK SHALL BE IN ACCORDANCE WITH NFPA 13 & 24, MOST RECENT EDITIONS. THE INSTALLATION OF THE UNDERGROUND PIPING AND ASSOCIATED WORK SHALL BE COMPLETED AS A DEFERRED SUBMITTAL UNDER A SEPARATE FIRE PERMIT. SEE FIRE PROTECTION DRAWINGS FOR MORE INFORMATION. PER EBMUD GUIDELINES, A REDUCED PRESSURE BACKFLOW PREVENTER MAY NOT BE REQUIRED; EBMUD TO CONFIRM. FIRE SYSTEM TO BE DESIGN BUILD BASED ON THE FOLLOWING PRESSURE AND FLOW INFORMATION: EBMUD CONNECTION POINT STATIC PRESSURE IN 27TH AVENUE = 61 PSI; RESIDUAL PRESSURE AT 0 GPM = 49 PSI; RESIDUAL PRESSURE AT 750 GPM = 47 PSI; RESIDUAL PRESSURE AT 1500 GPM = 43 PSI.

(5) INSTALL NEW SANITARY SEWER BUILDING CLEANOUT PER CITY OF OAKLAND STANDARD DETAIL D-24. COORDINATE WITH PLUMBING DRAWINGS.

(6) INSTALL NEW STANDARD CITY OF OAKLAND TYPE 1 SANITARY SEWER MANHOLE PER STANDARD DETAIL D-11 AND CONNECT NEW 8" SANITARY SEWER LATERAL. NEW 8" SANITARY SEWER LATERAL TO BE SDR-11 HDPE OR HIGH STRENGTH VCP. CONTRACTOR TO VERIFY ELEVATIONS OF EXISTING UTILITY LINES CROSSING NEW SANITARY SEWER LATERAL PRIOR TO INSTALLATION. SEE SANITARY SEWER PROFILE ON SHEET C2.01.

(7) PG&E TO INSTALL 5.5' x 9.5' UNDERGROUND TRANSFORMER VAULT. SEE JOINT TRENCH/ELECTRICAL PLANS FOR MORE INFORMATION.

(8) INSTALL NEW STANDARD CITY OF OAKLAND TYPE 1 STORM DRAIN MANHOLE PER STANDARD DETAIL D-11 AND CONNECT NEW 10" STORM DRAIN LATERAL. NEW 10" STORM DRAIN LATERAL TO BE SDR-11 HDPE OR HIGH STRENGTH VCP. CONTRACTOR TO VERIFY ELEVATIONS OF EXISTING UTILITY LINES CROSSING NEW STORM DRAIN LATERAL PRIOR TO INSTALLATION. SEE STORM DRAIN PROFILE ON SHEET C2.01.

(9) INSTALL 10" CAST IRON STORM DRAIN BACKWATER VALVE, JAY R. SMITH MFG. CO., OR EQUAL; INSTALL CONCRETE CHRISTY BOX WITH TRAFFIC COVER. INSTALLATION SHALL BE PER MANUFACTURER'S RECOMMENDATION AND ALSO SHALL MEET ALL CODE REQUIREMENTS. SEE STORM DRAIN PROFILE ON SHEET C2.01.

(10) INSTALL US CONCRETE/OLDCASTLE CB2436 (24"x36") OVERFLOW AREA DRAIN WITH LOCK-DOWN, NON-TRAFFIC RATED FRAME & GRATE, OR EQUAL.

(11) NEW BIORETENTION FACILITY. SEE DETAILS ON SHEET C4.01.

(12) INSTALL STANDARD CITY OF OAKLAND 3" SIDEWALK UNDERDRAIN PER STANDARD DETAIL D-13. SEE STORM DRAIN CLEANOUT TO FINISH SURFACE DETAIL ON SHEET C2.01.

NOTE:
ALL WORK FOR PG&E AND/OR EBMUD TO BE PERMITTED SEPARATELY PER THE CITY OF OAKLAND UTILITY EXCAVATION PERMIT PROCESS.

DESIGNER'S STATEMENT

THIS PLOT PLAN CORRECTLY REPRESENTS A PLOT PLAN MADE BY ME OR UNDER MY DIRECTION.

I HEREBY STATE THAT TO THE BEST OF MY KNOWLEDGE ALL PROVISIONS OF APPLICABLE STATE LAWS AND LOCAL ORDINANCES HAVE BEEN COMPLIED WITH.

I HEREBY FURTHER STATE THAT ALL PROPOSED GRADES, ELEVATIONS AND CONTOURS DELINEATED UPON THIS PLOT PLAN ARE BASED UPON A SURVEY BY KISTER, SAVIO & REI, INC., P.L.S. 8178, DATED JULY 30, 2020, THAT WAS INDICATED THEREON BY THE SURVEYOR THEREOF AS BEING BASED UPON CITY OF OAKLAND DATUM.

REGISTERED PROFESSIONAL ENGINEER
MATTHEW L. PIO
C 38863
CIVIL
STATE OF CALIFORNIA
Exp. 12/31/23

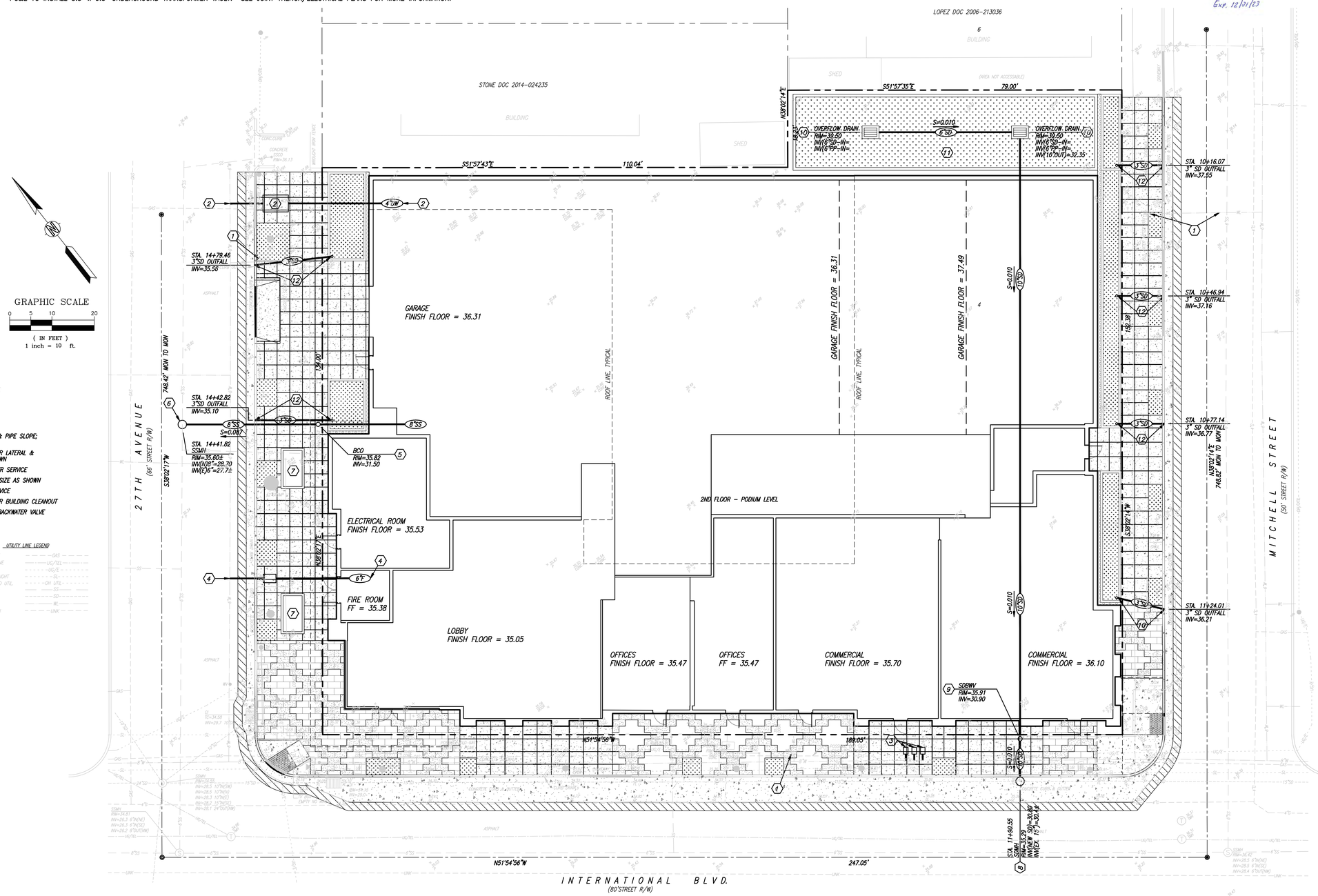

GRAPHIC SCALE
0 5 10 20
(IN FEET)
1 inch = 10 ft.

NEW CIVIL UTILITY LEGEND

	CONCRETE FLOW-THROUGH PLANTER BIORETION FACILITY
	NEW OVERFLOW AREA DRAIN
10"SD	PROPOSED STORM DRAIN & PIPE SLOPE; SIZE AS SHOWN
6"SS	PROPOSED SANITARY SEWER LATERAL & PIPE SLOPE; SIZE AS SHOWN
DW	PROPOSED DOMESTIC WATER SERVICE
6"F	PROPOSED FIRE SERVICE, SIZE AS SHOWN
IRR	PROPOSED IRRIGATION SERVICE
BCO	PROPOSED SANITARY SEWER BUILDING CLEANOUT
SDBWV	PROPOSED STORM DRAIN BACKWATER VALVE

UTILITY LINE LEGEND

GAS LINE ---GAS---
TELEPHONE ---UG/TEL---
ELECTRIC ---UG/E---
STREET LIGHT ---SL---
OVERHEAD UTIL ---OH UTIL---
SANITARY ---SS---
STORM ---SD---
WATER ---W---
UNKNOWN ---UNK---

PYATOK
1611 TELEGRAPH AVE.
SUITE 200
OAKLAND, CA 94612
T. 510.465.7010 | F. 510.465.8575
www.pyatok.com

THE UNITY COUNCIL
1900 FRUITVALE AVE
#2A
OAKLAND, CA 94601

LAND SURVEYING & CIVIL ENGINEERING
KISTER, SAVIO & REI
825 SAN PABLO, CA
PINOLE, CA 94564

2700 INTERNATIONAL
OAKLAND, CA 94601

STAMP:

ISSUE SCHEDULE

100 SD	5/11/22
50 DD	7/15/22
100 DD	9/16/22
50 CD	11/18/22
PERMIT SET	12/09/22

REVISION SCHEDULE

NO.	ISSUE	DATE

JOB NUMBER:	1937
DRAWN BY:	MLR
CHECKED BY:	MLR
ISSUE DATE:	12/09/2022
SCALE:	1"=10'

TITLE:
CIVIL UTILITY PLAN

SHEET:
C2.00

PRELIMINARY - Not for Construction

© 2019 PYATOK ARCHITECTURE & URBAN DESIGN

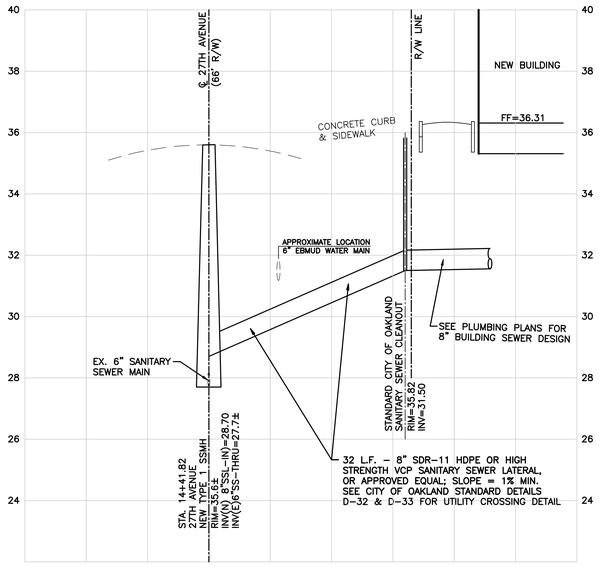

8" SANITARY SEWER LATERAL PROFILE LOOKING NORTHEAST

SCALE: 1"=10' HORIZ. & 1"=2' VERT.

NOTES:

1. ALL WORK TO BE DONE IN ACCORDANCE WITH THE STANDARDS & SPECIFICATIONS OF THE CITY OF OAKLAND.
2. THE LOCATIONS OF UNDERGROUND UTILITIES AS SHOWN ON THESE PLANS ARE BASED ON SURFACE EVIDENCE, UTILITY MAPS AND POTHOLLING. CONTRACTORS AND OTHERS PERFORMING WORK SHALL VERIFY THE EXACT DEPTH AND LOCATION OF ALL UNDERGROUND UTILITIES.

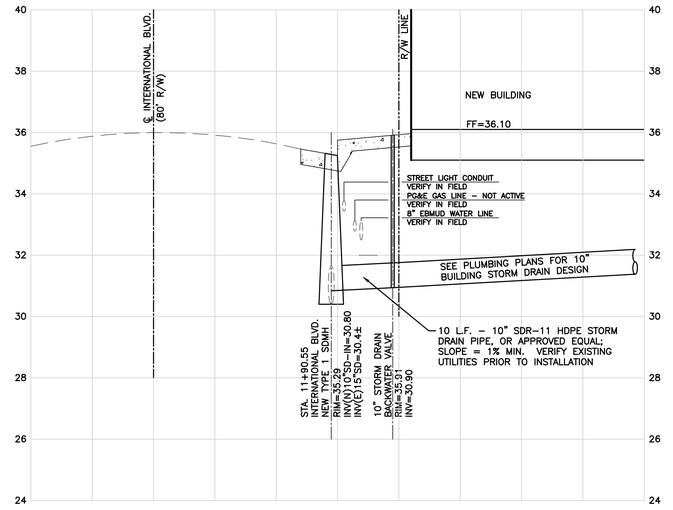

10" STORM DRAIN LATERAL PROFILE LOOKING NORTHWEST

SCALE: 1"=10' HORIZ. & 1"=2' VERT.

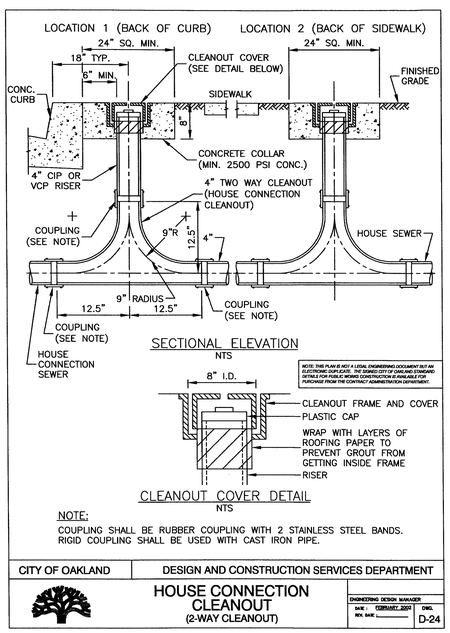

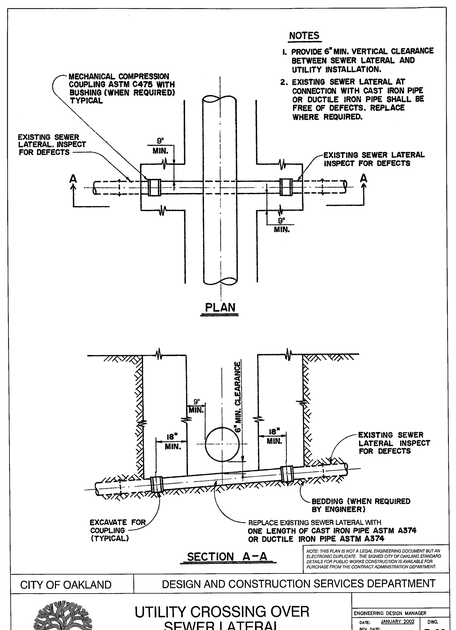

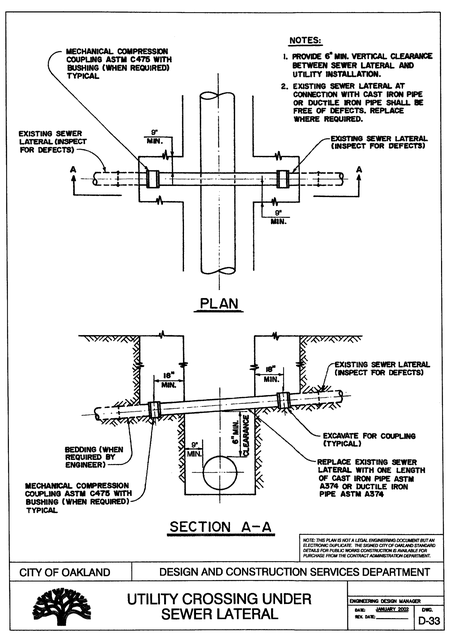

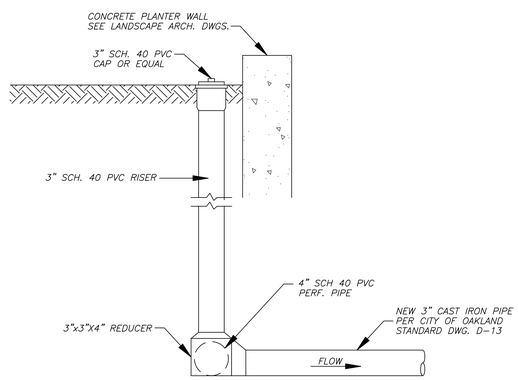

STORM DRAIN CLEANOUT TO FINISH SURFACE

NTS

PYATOK
1611 TELEGRAPH AVE.
SUITE 200
OAKLAND, CA 94612
T. 510.465.7010 | F. 510.465.8575
www.pyatok.com

THE UNITY COUNCIL
1900 FRUITVALE AVE
#2A
OAKLAND, CA 94601

LAND SURVEYING &
CIVIL ENGINEERING
KISTER, SAVIO & REI
825 SAN PABLO, CA
PINOLE, CA 94564

2700 INTERNATIONAL

OAKLAND, CA 94601

STAMP:

ISSUE SCHEDULE

100 SD	5/11/22
50 DD	7/15/22
100 DD	9/16/22
50 CD	11/18/22
PERMIT SET	12/09/22

REVISION SCHEDULE

NO.	ISSUE	DATE

JOB NUMBER:	1937
DRAWN BY:	MLR
CHECKED BY:	MLR
ISSUE DATE:	12/09/2022
SCALE:	AS SHOWN

TITLE:
CIVIL UTILITY PLAN

SHEET:
C2.01

PRELIMINARY - Not for Construction

© 2019 PYATOK ARCHITECTURE & URBAN DESIGN

REGISTERED PROFESSIONAL ENGINEER
MATTHEW L. REA
C 38663
CIVIL
STATE OF CALIFORNIA

Exp. 12/31/23

<u>PROJECT GENERAL NOTES</u>

1. TOPOGRAPHIC SURVEY PERFORMED BY KISTER, SAVIO & REI, INC.; DATED JULY 30, 2020. BENCHMARK IS ELEVATION = XX.XX, CITY OF OAKLAND DATUM. UTILITY LOCATIONS HAVE BEEN ADDED TO THIS DRAWING BASED ON INFORMATION PROVIDED BY THE RESPECTIVE UTILITY COMPANIES.
2. ALL ON-SITE WORK TO BE DONE IN ACCORDANCE WITH THE RECOMMENDATIONS PROVIDED FOR IN THE GEOTECHNICAL REPORT ENTITLED DRAFT "GEOTECHNICAL INVESTIGATION, PROPOSED MULTI-FAMILY RESIDENTIAL BUILDING, 2700 INTERNATIONAL BOULEVARD, OAKLAND, CALIFORNIA", DATED JUNE 17, 2022, INCLUDING ANY ADDENDUMS, AS PREPARED BY ROCKRIDGE GEOTECHNICAL.
3. ALL WORK PERFORMED IN THE PUBLIC RIGHT-OF-WAY TO BE DONE IN ACCORDANCE WITH THE STANDARDS AND SPECIFICATIONS OF THE CITY OF OAKLAND; ENGINEERING/ENCROACHMENT PERMITS WILL BE REQUIRED.
4. CARE SHALL BE TAKEN BY THE CONTRACTOR DURING GRADING OPERATIONS TO PRESERVE ANY BERM, DRAINAGE TERRACE, INTERCEPTOR SWALE OR OTHER DEVICE OF A PERMANENT NATURE ON OR ADJACENT TO THE PROPERTY.
5. WORK SHALL NOT BEGIN UNTIL ADEQUATE TEMPORARY BARRICADES, BARRIERS, FENCES, SIGNS, LIGHTS, OR OTHER SUCH TRAFFIC AND PEDESTRIAN WARNING AND CONTROL DEVICES ARE IN PLACE.
6. ALL KNOWN EXISTING UNDERGROUND UTILITIES ARE SHOWN ON THE PLAN AS BEST AS CAN BE ESTABLISHED FROM AVAILABLE INFORMATION. THE CONTRACTOR SHALL PROCEED WITH DUE CAUTION DURING UNDERGROUND OPERATIONS AND SHALL REPAIR OR REPLACE ALL UTILITIES AND SERVICES, EITHER MARKED IN THE FIELD OR INDICATED ON THE PLANS, WHICH ARE DAMAGED DURING CONSTRUCTION AT HIS OWN EXPENSE. CONTRACTOR IS ENCOURAGED TO CONTACT AN UNDERGROUND UTILITY LOCATING SERVICE PRIOR TO BEGINNING ANY EXCAVATION WORK FOR ASSISTANCE IN LOCATING UNDERGROUND UTILITIES.
7. ELEVATIONS AND LOCATIONS OF ALL EXISTING UTILITIES WHICH CROSS THE LINE OF CONSTRUCTION SHALL BE VERIFIED BY THE CONTRACTOR PRIOR TO THE START OF ANY CONSTRUCTION AFFECTING SAID LINES.
8. CONTRACTOR IS TO VERIFY WORK IN THE FIELD AND SHALL SATISFY HIMSELF AS TO THE ACCURACY BETWEEN THE WORK SET FORTH ON THESE PLANS AND THE WORK IN THE FIELD. ANY DISCREPANCIES SHALL BE BROUGHT TO THE ATTENTION OF THE ENGINEER PRIOR TO THE START OF CONSTRUCTION.
9. CONTRACTOR SHALL REPLACE OR REPAIR, AT HIS OWN EXPENSE, ALL DAMAGED, REMOVED OR OTHERWISE DISTURBED WALLS, FENCES, CURBS, ABOVE-GRADE IMPROVEMENTS OR PHYSICAL FEATURES OF WHATEVER NATURE TO THEIR ORIGINAL CONDITIONS, WHETHER SPECIFICALLY INDICATED ON THE PLANS OR NOT. THIS NOTE APPLIES TO DAMAGE BY THE CONTRACTOR OUTSIDE THE IMMEDIATE AREA OF THE WORK.
10. ALL TRENCHING OPERATIONS SHALL BE IN ACCORDANCE WITH THE REQUIREMENTS OF TITLE 8 (CAL/OSHA).
11. HAND TUNNELING/DIGGING WILL BE REQUIRED FOR EXCAVATION WORK IN WHICH EXISTING UTILITIES ARE WITHIN 24" OR LESS VERTICALLY OR HORIZONTALLY OF THE TRENCH LINE.
12. UPON COMPLETION OF THE WORK, THE CONTRACTOR SHALL CERTIFY THAT ALL WORK WAS PERFORMED IN ACCORDANCE WITH THE REQUIREMENTS OF THE CONTRACT DOCUMENTS. VARIATIONS SHALL BE DECLARED AND PRESENTED TO THE OWNERS REPRESENTATIVE IN WRITING UPON COMPLETION OF CONSTRUCTION.
13. ALL SITE WORK SHALL BE IN CONFORMANCE WITH TITLE 24 OF THE CALIFORNIA ADMINISTRATIVE CODE AND WITH THE AMERICANS WITH DISABILITIES ACT.
14. IT SHALL BE THE CONTRACTOR'S RESPONSIBILITY TO MAINTAIN CONTROL OF THE ENTIRE CONSTRUCTION OPERATION AND TO THIS END KEEP THE ENTIRE SITE FREE FROM EROSION. EROSION AND SEDIMENT CONTROL MEASURES SHALL BE IN PLACE AND EFFECTIVE FOR THE DURATION OF ACTIVITY.
15. THE OWNER'S REPRESENTATIVE WILL NOT DIRECTLY CONTROL THE PHYSICAL ACTIVITIES OF THE CONTRACTOR OR ANY SUBCONTRACTORS. CONTRACTOR WILL BE SOLELY AND COMPLETELY RESPONSIBLE FOR WORKING CONDITIONS ON THE JOB SITE, INCLUDING SAFETY OF ALL PERSONS AND PROPERTY DURING PERFORMANCE OF THE WORK. THIS REQUIREMENT WILL APPLY CONTINUOUSLY AND NOT BE LIMITED TO NORMAL WORKING HOURS.
16. CONTRACTOR TO REMOVE ALL EXISTING/ABANDONED ON-SITE IMPROVEMENTS, INCLUDING, BUT NOT LIMITED TO, CONCRETE CURB, GUTTER, SIDEWALK & ASPHALT CONCRETE PAVEMENT IN CONFLICT WITH THE NEW WORK. ALSO, CONTRACTOR TO REMOVE ALL EXISTING/ABANDONED ABOVE GROUND & BELOW GROUND UTILITIES IN CONFLICT WITH THE NEW WORK.
17. IN THE EVENT OF THE ENCOUNTER OF SUBSURFACE MATERIALS SUSPECTED TO BE AN ARCHAEOLOGICAL OR PALEONTOLOGICAL NATURE, ALL GRADING OR EXCAVATION SHALL CEASE IN THE IMMEDIATE AREA AND THE FIND LEFT UNTOUCHED. APPLICANT SHALL SELECT AND PROVIDE A QUALIFIED PROFESSIONAL ARCHAEOLOGIST CERTIFIED BY THE REGISTER OF PROFESSIONAL ARCHAEOLOGISTS OR PALEONTOLOGIST WITH A DEGREE IN PALEONTOLOGY OR GEOLOGY, TO EVALUATE. THE RECOMMENDATION OF THE QUALIFIED PROFESSIONAL SHALL BE IMPLEMENTED BEFORE WORK MAY PROCEED. THE APPLICANT SHALL BE LIABLE FOR ALL COSTS ASSOCIATED THEREWITH.
18. EARTHWORK QUANTITIES:

    STRIPPING QUANTITY: INCLUDING ASPHALT, BASEROCK & BUILDING SLAB EXCAVATION (9" SECTION): 750± CUBIC YARDS

    8" SCARIFICATION AND RECOMPACTION BELOW BUILDING SLAB & FOOTINGS: 560± CUBIC YARDS

    EXCAVATION & OFFHAUL OF ON-SITE SOIL: 1,850± CUBIC YARDS
19. THE ESTIMATED EARTHWORK QUANTITIES ARE DETERMINED BY STANDARD ENGINEERING METHODS UTILIZING THE BEST INFORMATION AVAILABLE. IT IS THE CONTRACTOR'S RESPONSIBILITY TO PERFORM AN INDEPENDENT QUANTITY ESTIMATE FOR BIDDING PURPOSES AND TO VERIFY THE ENGINEER'S ESTIMATE OF GRADING QUANTITIES. ESTIMATED EARTHWORK QUANTITIES MAY VARY DEPENDING UPON THE ACTUAL DEPTH OF STRIPPING AND DEMOLITION ACTIVITIES.
20. THE CONTRACTOR SHALL NOTIFY THE CITY OF OAKLAND A MINIMUM OF FORTY EIGHT (48) HOURS PRIOR TO COMMENCING WORK.
21. CONTRACTOR SHALL NOTIFY UNDERGROUND SERVICE ALERT AT 1-800-227-2600 PRIOR TO ANY EXCAVATION.
22. ALL EROSION CONTROL MEASURES PER "MANUAL OF STANDARDS FOR EROSION AND SEDIMENT CONTROL MEASURES" PUBLISHED BY ABAG, AND "EROSION AND SEDIMENT CONTROL FIELD MEASURE" PUBLISHED BY CALIFORNIA REGIONAL WATER QUALITY CONTROL BOARD. NOTWITHSTANDING EROSION CONTROL MEASURES ON THIS PLAN, SEDIMENT AND EROSION CONTROL IS REQUIRED FOR ALL AREAS WITH DISTURBED OR GRADED SOIL. AFTER EACH STORM EVENT, ALL SEDIMENT AND EROSION CONTROL MEASURES SHALL BE INSPECTED, MAINTAINED, AND MODIFIED AS REQUIRED.

N:\Standards\2008SDSK\2008 WBLOCKS\Sheet 2 - Pollution Prevention-F.dwg 3-25-11 12:09:06 PM danielc

Pollution Prevention - It's Part of the Plan

Make sure your crews and subs do the job right!

Runoff from streets and other paved areas is a major source of pollution and damage to creeks and the San Francisco Bay. Construction activities can directly affect the health of creeks and the Bay unless contractors and crews plan ahead to keep dirt, debris, and other construction waste away from storm drains and local creeks. Following these guidelines and the project specifications will ensure your compliance with County of Alameda requirements.

Materials storage & spill cleanup

Non-hazardous materials management

- Sand, dirt, and similar materials must be stored at least 10 feet (3 meters) from catch basins. All construction material must be covered with a tarp and contained with a perimeter control during wet weather or when rain is forecasted or when not actively being used within 14 days.
- Use (but don't overuse) reclaimed water for dust control as needed.
- Sweep or vacuum streets and other paved areas daily. Do not wash down streets or work areas with water!
- Recycle all asphalt, concrete, and aggregate base material from demolition activities. Comply with Alameda County Ordinances for recycling construction materials, wood, gyp board, pipe, etc.
- Check dumpsters regularly for leaks and to make sure they are not overfilled. Repair or replace leaking dumpsters promptly.
- Cover all dumpsters with a tarp at the end of every work day or during wet weather.

Hazardous materials management

- Label all hazardous materials and hazardous wastes (such as pesticides, paints, thinners, solvents, fuel, oil, and antifreeze) in accordance with city, county, state, and federal regulations.
- Store hazardous materials and wastes in water tight containers, store in appropriate secondary containment, and cover them at the end of every work day or during wet weather or when rain is forecasted.
- Follow manufacturer's application instructions for hazardous materials and be careful not to use more than necessary. Do not apply chemicals outdoors when rain is forecasted within 24 hours.
- Be sure to arrange for appropriate disposal of all hazardous wastes.

Spill prevention and control

- Keep a stockpile of spill cleanup materials (rags, absorbents, etc.) available at the construction site at all times.
- When spills or leaks occur, contain them immediately and be particularly careful to prevent leaks and spills from reaching the gutter, street, or storm drain. Never wash spilled material into a gutter, street, storm drain, or creek!
- Dispose of all containment and cleanup materials properly.
- Report any hazardous materials spills immediately! Dial 911 or Alameda County Public Works Agency dispatch at (510) 670-5500

Construction Entrances and Perimeter

- Establish and maintain effective perimeter controls and stabilize all construction entrances and exits to sufficiently control erosion and sediment discharges from site and tracking off site.
- Sweep or vacuum any street tracking immediately and secure sediment source to prevent further tracking.

Vehicle and equipment maintenance & cleaning

- Inspect vehicles and equipment for leaks frequently. Use drip pans to catch leaks until repairs are made; repair leaks promptly.
- Fuel and maintain vehicles on site only in a bermed area or over a drip pan that is big enough to prevent runoff.
- If you must clean vehicles or equipment on site, clean with water only in a bermed area that will not allow rinse water to run into gutters, streets, storm drains, or creeks.
- Do not clean vehicles or equipment on-site using soaps, solvents, degreasers, steam cleaning equipment, etc.

Earthwork & contaminated soils

- Keep excavated soil on the site where it will not collect in the street.
- Transfer to dump trucks should take place on the site, not in the street.
- Use fiber rolls, silt fences, or other control measures to minimize the flow of silt off the site.

- Earth moving activities are only allowed during dry weather by permit and as approved by the County Inspector in the Field.
- Mature vegetation is the best form of erosion control. Minimize disturbance to existing vegetation whenever possible.
- If you disturb a slope during construction, prevent erosion by securing the soil with erosion control fabric, or seed with fast-growing grasses as soon as possible. Place fiber rolls down-slope until soil is secure.
- If you suspect contamination (from site history, discoloration, odor, texture, abandoned underground tanks or pipes, or buried debris), call the Engineer for help in determining what should be done, and manage disposal of cntaminated soil according to their instructions.

Dewatering operations

- Effectively manage all run-on, all runoff within the site, and all runoff that discharges from the site. Run-on from off site shall be directed away from all disturbed areas or shall collectively be in compliance.
- Reuse water for dust control, irrigation, or another on-site purpose to the greatest extent possible.
- Be sure to notify and obtain approval from the Engineer before discharging water to a street, gutter, or storm drain. Filtration or diversion through a basin, tank, or sediment trap may be required.
- In areas of known contamination, testing is required prior to reuse or discharge of groundwater. Consult with the Engineer to determine what testing is required and how to interpret results. Contaminated groundwater must be treated or hauled off-site for proper disposal.

Saw cutting

- Always completely cover or barricade storm drain inlets when saw cutting. Use filter fabric, catch basin inlet filters, or sand/gravel bags to keep slurry out of the storm drain system.
- Shovel, absorb, or vacuum saw-cut slurry and pick up all waste as soon as you are finished in one location or at the end of each work day (whichever is sooner!).
- If saw cut slurry enters a catch basin, clean it up immediately.

Paving/asphalt work

- Always cover storm drain inlets and manholes when paving or applying seal coat, tack coat, slurry seal, or fog seal.
- Protect gutters, ditches, and drainage courses with sand/gravel bags, or earthen berms.
- Do not sweep or wash down excess sand from sand sealing into gutters, storm drains, or creeks. Collect sand and return it to the stockpile, or dispose of it as trash.
- Do not use water to wash down fresh asphalt concrete pavement.

Concrete, grout, and mortar storage & waste disposal

- Store concrete, grout, and mortar under cover, on pallets, and away from drainage areas. These materials must never reach a storm drain.
- Wash out concrete equipment/trucks off-site or into contained washout areas that will not allow discharge of wash water onto the underlying soil or onto the surrounding areas.

- Collect the wash water from washing exposed aggregate concrete and remove it for appropriate disposal off site.

Painting

- Never rinse paint brushes or materials in a gutter or street!
- Paint out excess water-based paint before rinsing brushes, rollers, or containers in a sink.
- Paint out excess oil-based paint before cleaning brushes in thinner.
- Filter paint thinners and solvents for reuse whenever possible. Dispose of oil-based paint sludge and unusable thinner as hazardous waste.

Landscape Materials

- Contain, cover, and store on pallets all stockpiled landscape materials (mulch, compost, fertilizers, etc.) during wet weather or when rain is forecasted or when not actively being used within 14 days.
- Discontinue the application of any erodible landscape material within 2 days of forecasted rain and during wet weather.

Storm drain polluters may be liable for fines of $10,000 or more per day!

For references and more detailed information:
www.cleanwaterprogram.org
www.cabmphandbooks.com

REVISIONS

NO.	DESCRIPTION	BY	DATE	APPV'D
1				
2				
3				
4				
5				

APPROVED — REGISTERED PROFESSIONAL ENGINEER HENRY E. ACKERMAN No. 037823 Exp. 3/31/2011 CIVIL STATE OF CALIFORNIA

DATE ADV DATE

COUNTY OF ALAMEDA ☆ PUBLIC WORKS AGENCY
ZONE X, LINE X
PROJECT DESCRIPTION
POLLUTION PREVENTION

WORK ORDER NO. FXXCXX
SPECIFICATION NO. FC XX-XXX
SHEET NO. 2 OF #
FILE NO. CB-XXX

PYATOK
1611 TELEGRAPH AVE.
SUITE 200
OAKLAND, CA 94612
T. 510.465.7010 | F. 510.465.8575
www.pyatok.com

THE UNITY COUNCIL
1900 FRUITVALE AVE
#2A
OAKLAND, CA 94601

LAND SURVEYING & CIVIL ENGINEERING
KISTER, SAVIO & REI
825 SAN PABLO, CA
PINOLE, CA 94564

2700 INTERNATIONAL
OAKLAND, CA 94601

STAMP:

REGISTERED PROFESSIONAL ENGINEER MATTHEW L. REI C 39863 CIVIL STATE OF CALIFORNIA
Exp. 12/31/23

ISSUE SCHEDULE

100 SD	5/11/22
50 DD	7/15/22
100 DD	9/16/22
50 CD	11/18/22
PERMIT SET	12/09/22

REVISION SCHEDULE

NO.	ISSUE	DATE

JOB NUMBER:	1937
DRAWN BY:	MLR
CHECKED BY:	MLR
ISSUE DATE:	12/09/2022
SCALE:	N/A

TITLE:
GENERAL NOTES & CITY OF OAKLAND POLLUTION PREVENTIC PLAN

SHEET:
C3.00

PRELIMINARY - Not for Construction

© 2019 PYATOK ARCHITECTURE & URBAN DESIGN

C.3 STORM WATER TREATMENT MEASURES

IMP	IMP TYPE	DMA AREA	DMA TYPE	DRAINAGE AREA	IMPERVIOUS AREA	PERVIOUS AREA	BIORETENTION AREA REQUIRED	BIORETENTION AREA PROVIDED	RISER HEIGHT	LOCATION
A	CONCRETE FLOW-THRU PLANTER	A1	ROOF	16,944 SF	16,944 SF	0 SF	678 SF			
A	CONCRETE FLOW-THRU PLANTER	A2	PODIUM	5,766 SF	4,687 SF	1,079 SF	192 SF			
							870 SF*	1,178 SF	0.50'	ONSITE
B	SELF RETAINING	B	LANDSCAPING	653 SF	0 SF	653 SF	0 SF			
C	SELF TREATING	C	MISC. AREAS	2,245 SF	1,400 SF	845 SF	0 SF**			

STORMWATER MANAGEMENT NOTES:

1) * – BIORETENTION REQUIRED AREA BASED ON 4% METHOD (IMPERVIOUS AREA + 0.1(PERVIOUS AREA)) x 0.04).
2) STENCIL ALL ON-SITE AREA DRAINS TO BE MARKED WITH "NO DUMPING – DRAINS TO BAY".
3) PROPOSED CONCRETE FLOW-THRU PLANTER TO RECEIVE STORMWATER RUNOFF DIRECTLY FROM ROOF DOWNSPOUTS. DOWNSPOUTS TO BE COLLECTED AND PIPED DIRECTLY TO IMP A. PODIUM DRAINAGE WILL BE PIPED DIRECTLY TO IMP A.
4) TRASH AREA LOCATED INSIDE GARAGE AREA.
5) FIRE SPRINKLER TEST WATER TO BE DIRECTED TO SANITARY SEWER OR VEGETATED AREAS.
6) SUSTAINABLE LANDSCAPE PRACTICES TO BE INCORPORATED INTO PROJECT LANDSCAPING.
7 ** – NOTE: DMA-C ARE MISCELLANEOUS NON-PLANTER AREAS BETWEEN THE PROPOSED BUILDING AND THE PROPERTY LINE THAT WILL NOT BE TREATED.

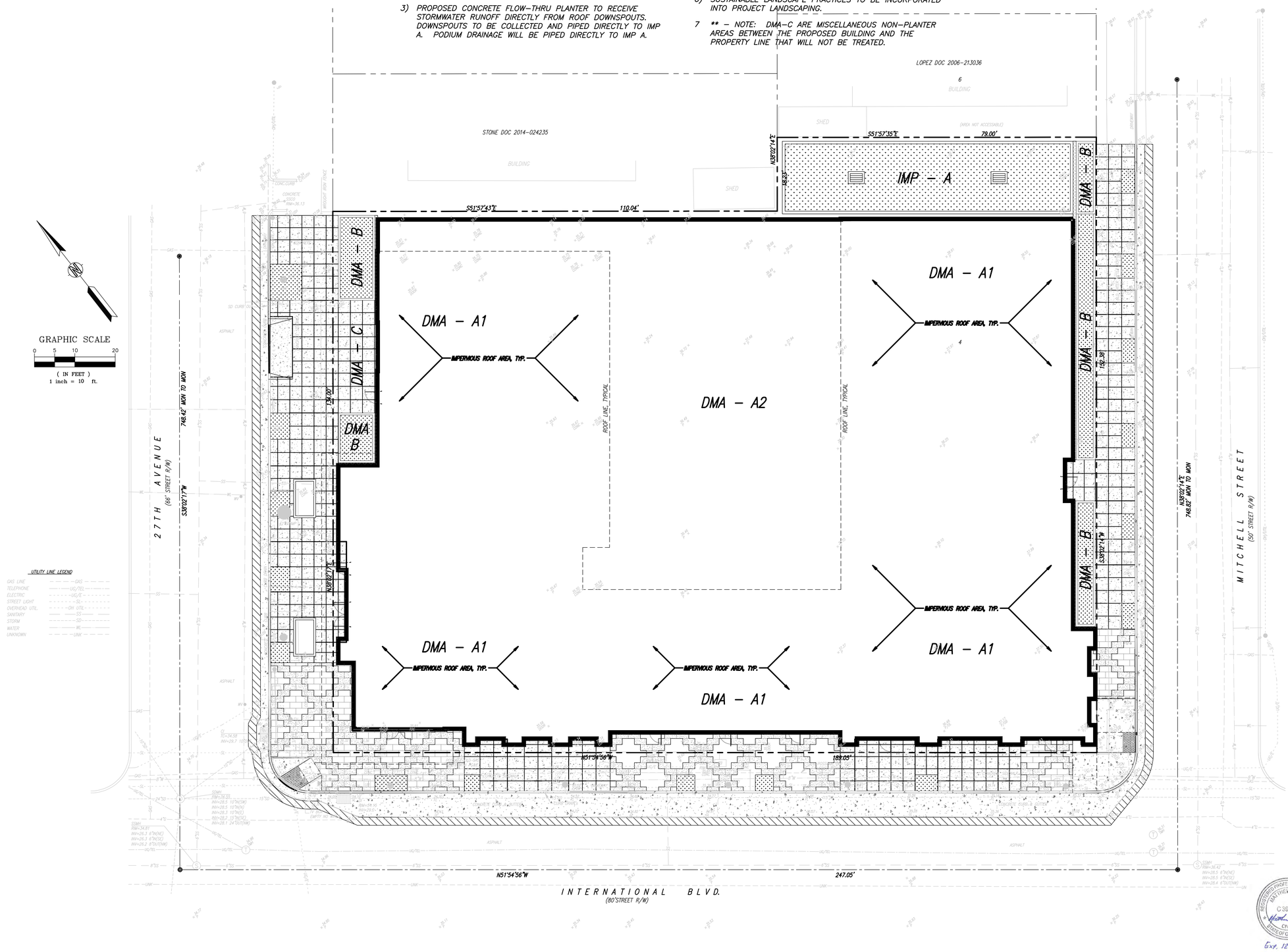

PYATOK
1611 TELEGRAPH AVE.
SUITE 200
OAKLAND, CA 94612
T. 510.465.7010 | F. 510.465.8575
www.pyatok.com

THE UNITY COUNCIL
1900 FRUITVALE AVE
#2A
OAKLAND, CA 94601

LAND SURVEYING & CIVIL ENGINEERING
KISTER, SAVIO & REI
825 SAN PABLO, CA
PINOLE, CA 94564

2700 INTERNATIONAL
OAKLAND, CA 94601

STAMP:

ISSUE SCHEDULE

100 SD	5/11/22
50 DD	7/15/22
100 DD	9/16/22
50 CD	11/18/22
PERMIT SET	12/09/22

REVISION SCHEDULE

NO.	ISSUE	DATE

JOB NUMBER:	1937
DRAWN BY:	MLR
CHECKED BY:	MLR
ISSUE DATE:	12/09/2022
SCALE:	1"=10'

TITLE:
POST-CONSTRUCTION STORMWATER MANAGEMENT PLA

SHEET:
C4.00

PRELIMINARY - Not for Construction

© 2016 PYATOK ARCHITECTURE & URBAN DESIGN

REGISTERED PROFESSIONAL ENGINEER MATTHEW L. RUSSELL C 38683 CIVIL STATE OF CALIFORNIA

Exp. 12/31/23

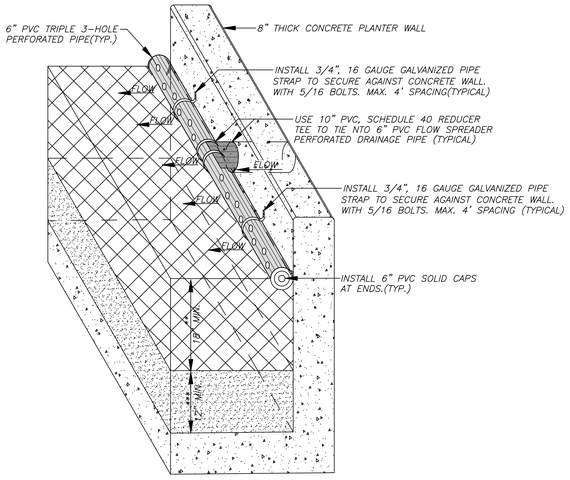

6" PVC FLOW SPREADER DETAIL WITH CONNECTION TO 10" OUTFALL

N.T.S.

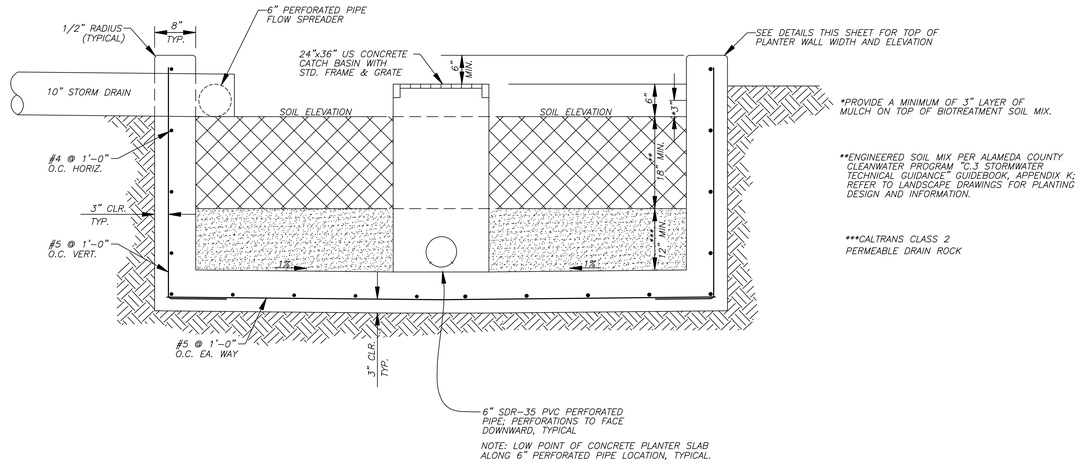

TYPICAL ENCLOSED FLOW–THRU BIORETENTION PLANTER SECTION

NTS

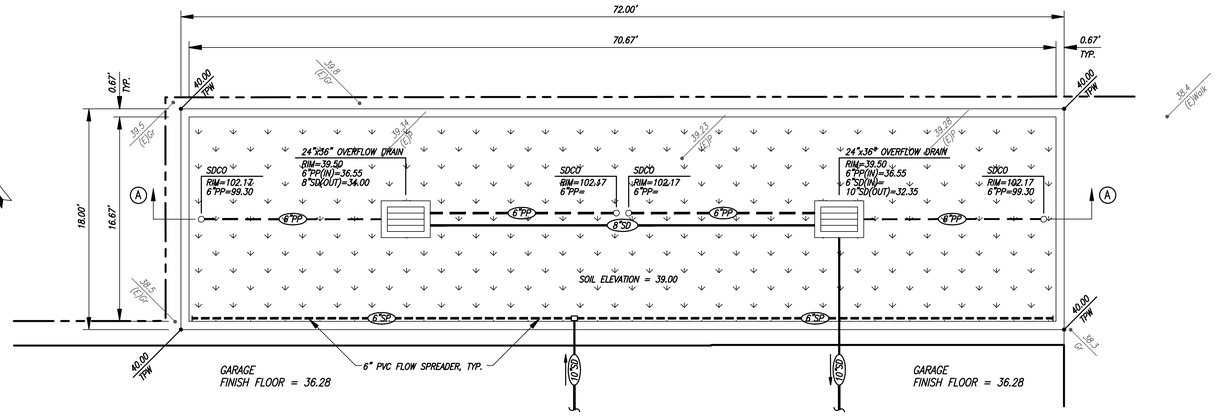

1,178 SF FLOW–THRU BIORETENTION PLANTER BIOSWALE

1"=5'

NOTES:

REFER TO LANDSCAPE ARCHITECTURE PLANS FOR PLANTING & IRRIGATION DESIGN

REFER TO STRUCTURAL ENGINEERING PLANS FOR BIORETENTION PLANTER WALL & SLAB DESIGN

SLOPE BOTTOM SLAB 1% MIN. TOWARD 6" PERFORATED PIPE, TYP.

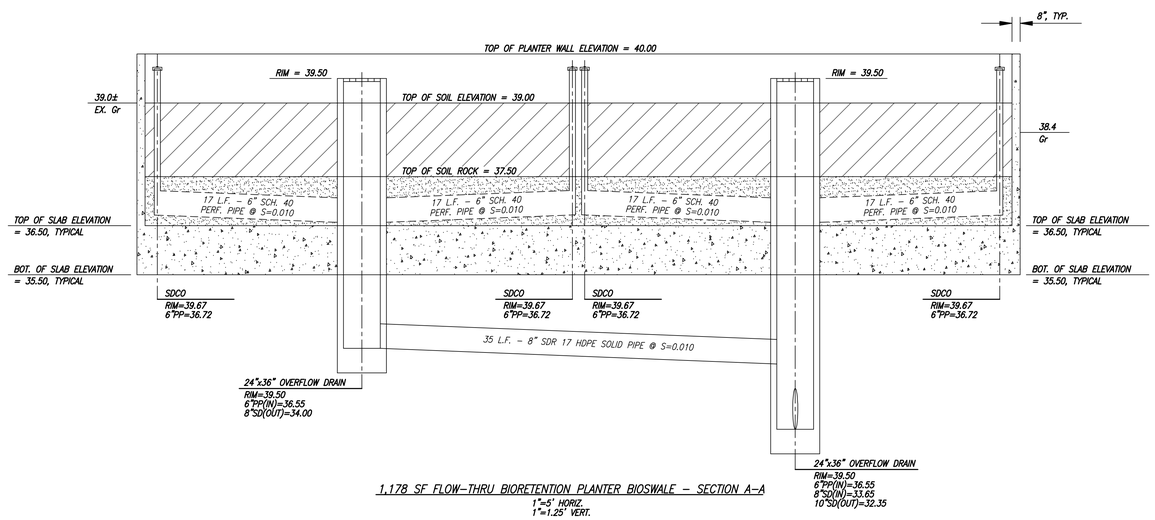

1,178 SF FLOW–THRU BIORETENTION PLANTER BIOSWALE – SECTION A–A

1"=5' HORIZ.
1"=1.25' VERT.

PYATOK
1611 TELEGRAPH AVE.
SUITE 200
OAKLAND, CA 94612
T. 510.465.7010 | F. 510.465.8575
www.pyatok.com

THE UNITY COUNCIL
1900 FRUITVALE AVE
#2A
OAKLAND, CA 94601

LAND SURVEYING & CIVIL ENGINEERING
KISTER, SAVIO & REI
825 SAN PABLO, CA
PINOLE, CA 94564

2700 INTERNATIONAL
OAKLAND, CA 94601

STAMP:

ISSUE SCHEDULE

100 SD	5/11/22
50 DD	7/15/22
100 DD	9/16/22
50 CD	11/18/22
PERMIT SET	12/09/22

REVISION SCHEDULE

NO.	ISSUE	DATE

JOB NUMBER:	1937
DRAWN BY:	MLR
CHECKED BY:	MLR
ISSUE DATE:	12/09/2022
SCALE:	AS SHOWN

TITLE:
STORMWATER CONTROL DETAILS

SHEET:
C4.01

PRELIMINARY - Not for Construction

REGISTERED PROFESSIONAL ENGINEER MATTHEW T. RUSSELL C 38863 CIVIL STATE OF CALIFORNIA

Exp. 12/31/23

© 2018 PYATOK ARCHITECTURE & URBAN DESIGN

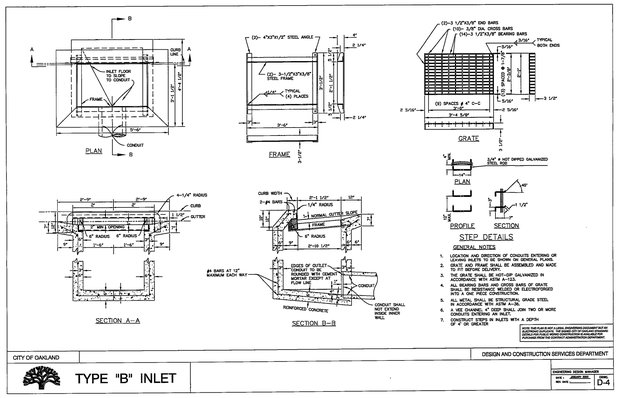

CITY OF OAKLAND | DESIGN AND CONSTRUCTION SERVICES DIVISION

TYPE "B" INLET

ENGINEERING DESIGN MANAGER — DATE: JANUARY 2022 — CIVIL — REV. DATE: — D-4

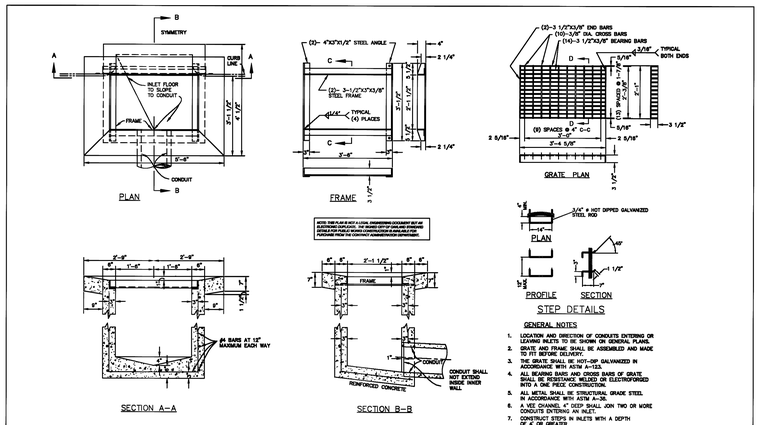

CITY OF OAKLAND | DESIGN AND CONSTRUCTION SERVICES DIVISION

TYPE "D" INLET

ENGINEERING DESIGN MANAGER — DATE: JANUARY 2022 — CIVIL — REV. DATE: — D-6

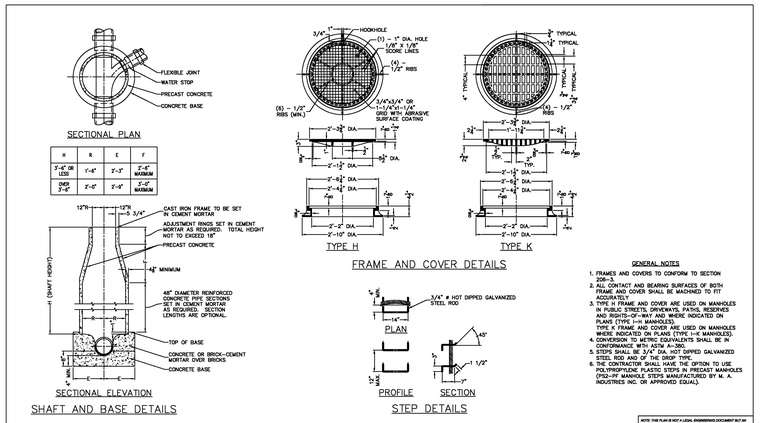

CITY OF OAKLAND | DESIGN AND CONSTRUCTION SERVICES DEPARTMENT

MANHOLE TYPE 1

ENGINEERING DESIGN MANAGER — DATE: JANUARY 2022 — CIVIL — REV. DATE: — D-11

CITY OF OAKLAND | DESIGN AND CONSTRUCTION SERVICES DEPARTMENT

SIDEWALK UNDERDRAIN

ENGINEERING DESIGN MANAGER — DATE: JANUARY 2022 — CIVIL — REV. DATE: — D-13

CITY OF OAKLAND | DESIGN AND CONSTRUCTION SERVICES DEPARTMENT

TRENCH DETAIL

ENGINEERING DESIGN MANAGER — DATE: JANUARY 2022 — CIVIL — REV. DATE: — D-22.0

NOTES:

1. Excavated material shall not be used to fill voids caused by overexcavation; such voids shall be filled with compacted bedding material. Unless directed by the Engineer, no separate payment will be made for overexcavation.
2. Import backfill material shall conform to Subsection 306–1.31
3. Aggregate base shall conform to crushed miscellaneous base (Section 200–2.4) or better. The base material must be approved by the Engineer.
4. The streets of Oakland are generally paved with either AC, PCC, or a combination of the two. The existing pavement may differ from the replacement Pavement Type (A to F) indicated on the plans.
5. Compaction by jetting is not permitted.
6. When flexible pipe (HDPE, etc.) is used, pipe shall be backfilled to the spring line, compacted and backfill tested prior to completing initial backfill.
7. The compacted temporary resurfacing shall be a minimum of 2" thick placed on the required base, and shall be removed prior to placing the permanent paving.
8. Backfill testing is required and results shall be approved by the Engineer prior to paving.
9. No longitudinal joints or seams are allowed in bike lanes. If a longitudinal joint is constructed due to the Contractor's work or this requirement, the Contractor shall remove a minimum of 2" of asphalt from the pavement across the entire bike lane using a method approved by the City and then resurface the bike lane to the Engineer's satisfaction.
10. During backfill operations, the trench shall be backfilled, compacted, and tested to the spring line of any utilities crossing the trench before proceeding with further backfill.
11. Unless specified otherwise, measurement for payment of additional bedding, imported backfill and temporary paving (when listed as separate pay items) shall be based upon the trench widths defined on this detail. The lower trench width for 8" pipe shall be 30".
12. Clean and tackcoat sides of excavation and between paving courses with spray application of SS–1 emulsion before placing asphalt–concrete pavement section.
13. If the distance to the edge of gutter is less than 3' from one trench edge, the pavement replacement shall extend to the edge of existing gutter.
14. In areas where existing paving consists of rubberized AC, the trench area should be repaved with the equivalent pavement section of rubberized AC. As an alternate, a dense graded AC section equivalent to two–times the the thickness of the rubberized AC may be substituted.

NOTE: THIS PLAN IS NOT A LEGAL ENGINEERING DOCUMENT BUT AN ELECTRONIC DUPLICATE. THE SIGNED CITY OF OAKLAND STANDARD DETAILS FOR PUBLIC WORKS CONSTRUCTION IS AVAILABLE FOR PURCHASE FROM THE CONTRACT ADMINISTRATION DEPARTMENT.

CITY OF OAKLAND | DESIGN AND CONSTRUCTION SERVICES DEPARTMENT

TRENCH DETAIL

ENGINEERING DESIGN MANAGER — DATE: JANUARY 2022 — CIVIL — REV. DATE: — D-22.1

PYATOK
1611 TELEGRAPH AVE.
SUITE 200
OAKLAND, CA 94612
T. 510.465.7010 | F. 510.465.8575
www.pyatok.com

THE UNITY COUNCIL
1900 FRUITVALE AVE
#2A
OAKLAND, CA 94601

LAND SURVEYING & CIVIL ENGINEERING
KISTER, SAVIO & REI
825 SAN PABLO, CA
PINOLE, CA 94564

2700 INTERNATIONAL

OAKLAND, CA 94601

STAMP:

ISSUE SCHEDULE

100 SD	5/11/22
50 DD	7/15/22
100 DD	9/16/22
50 CD	11/18/22
PERMIT SET	12/09/22

REVISION SCHEDULE

NO.	ISSUE	DATE

JOB NUMBER: 1937
DRAWN BY: MLR
CHECKED BY: MLR
ISSUE DATE: 12/09/2022
SCALE: N/A

TITLE:
CITY OF OAKLAND
STANDARD PLANS

SHEET:
C5.00

PRELIMINARY - Not for Construction

© 2018 PYATOK ARCHITECTURE & URBAN DESIGN

REGISTERED PROFESSIONAL ENGINEER — MATTHEW T. RODRIGUEZ — C 38863 — CIVIL — STATE OF CALIFORNIA

Exp. 12/31/23

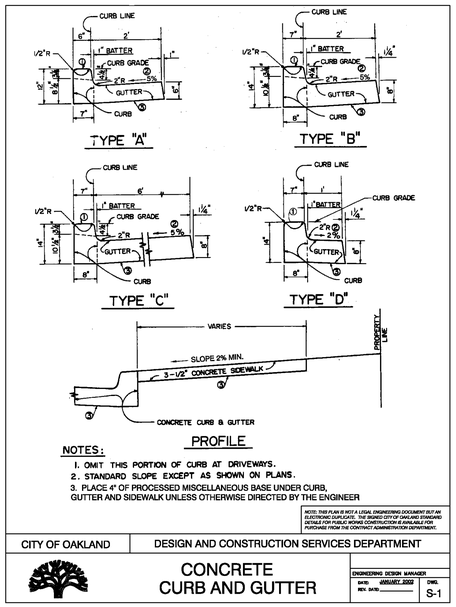

NOTES:

1. OMIT THIS PORTION OF CURB AT DRIVEWAYS.
2. STANDARD SLOPE EXCEPT AS SHOWN ON PLANS.
3. PLACE 4" OF PROCESSED MISCELLANEOUS BASE UNDER CURB, GUTTER AND SIDEWALK UNLESS OTHERWISE DIRECTED BY THE ENGINEER

NOTE: THIS PLAN IS NOT A LEGAL ENGINEERING DOCUMENT BUT AN ELECTRONIC DUPLICATE. THE SIGNED CITY OF OAKLAND STANDARD DETAILS FOR PUBLIC WORKS CONSTRUCTION IS AVAILABLE FOR PURCHASE FROM THE CONTRACT ADMINISTRATION DEPARTMENT.

CITY OF OAKLAND | DESIGN AND CONSTRUCTION SERVICES DEPARTMENT

CONCRETE CURB AND GUTTER

ENGINEERING DESIGN MANAGER
DATED: JANUARY 2002
REV. DATED: _____
DWG. S-1

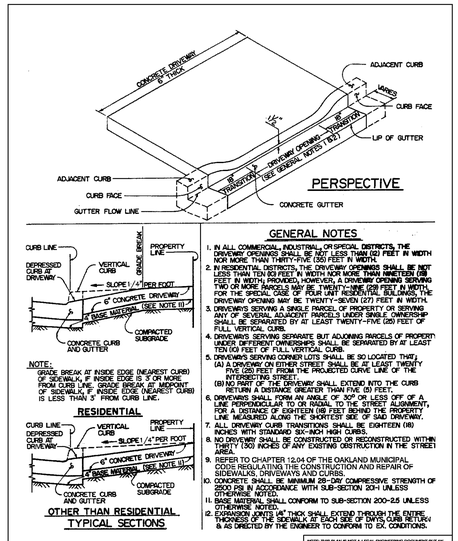

GENERAL NOTES

1. IN ALL COMMERCIAL, INDUSTRIAL, OR SPECIAL DISTRICTS, THE DRIVEWAY OPENING SHALL BE NOT LESS THAN (12) FEET IN WIDTH NOR MORE THAN THIRTY-FIVE (35) FEET IN WIDTH.
2. IN RESIDENTIAL DISTRICTS, THE DRIVEWAY OPENING SHALL BE NOT LESS THAN (9) FEET IN WIDTH NOR MORE THAN FIFTEEN (15) FEET IN WIDTH; PROVIDED, HOWEVER, A DRIVEWAY OPENING SERVING TWO OR MORE PARCELS MAY BE TWENTY-NINE (29) FEET IN WIDTH. FOR THE SPECIAL CASE OF FOUR UNIT RESIDENTIAL BUILDINGS, THE DRIVEWAY OPENING MAY BE TWENTY-SEVEN (27) FEET IN WIDTH.
3. DRIVEWAYS SERVING A SINGLE PARCEL OF PROPERTY OR SERVING ANY OF SEVERAL ADJACENT PARCELS UNDER SINGLE OWNERSHIP SHALL BE SEPARATED BY AT LEAST TWENTY-FIVE (25) FEET OF FULL VERTICAL CURB.
4. DRIVEWAYS SERVING SEPARATE BUT ADJOINING PARCELS OF PROPERTY UNDER DIFFERENT OWNERSHIPS SHALL BE SEPARATED BY AT LEAST TEN (10) FEET OF FULL VERTICAL CURB.
5. DRIVEWAYS SERVING CORNER LOTS SHALL BE SO LOCATED THAT:
   (A) A DRIVEWAY ON EITHER STREET SHALL BE AT LEAST TWENTY FIVE (25) FEET FROM THE PROJECTED CURVE LINE OF THE INTERSECTING STREET.
   (B) NO PART OF THE DRIVEWAY SHALL EXTEND INTO THE CURB RETURN A DISTANCE GREATER THAN FIVE (5) FEET.
6. DRIVEWAYS SHALL FORM AN ANGLE OF 90° OR LESS OFF OF A LINE PERPENDICULAR TO OR RADIAL TO THE STREET ALIGNMENT, FOR A DISTANCE OF EIGHTEEN (18) FEET BEHIND THE PROPERTY LINE MEASURED ALONG THE SHORTEST SIDE OF SAID DRIVEWAY.
7. ALL DRIVEWAY CURB TRANSITIONS SHALL BE EIGHTEEN (18) INCHES WITH STANDARD SIX-INCH HIGH CURBS.
8. NO DRIVEWAY SHALL BE CONSTRUCTED OR RECONSTRUCTED WITHIN THIRTY (30) INCHES OF ANY EXISTING OBSTRUCTION IN THE STREET AREA.
9. REFER TO CHAPTER 12.04 OF THE OAKLAND MUNICIPAL CODE REGULATING THE CONSTRUCTION AND REPAIR OF SIDEWALKS, DRIVEWAYS AND CURBS.
10. CONCRETE SHALL BE MINIMUM 28-DAY COMPRESSIVE STRENGTH OF 2500 PSI IN ACCORDANCE WITH SUB-SECTION 201-1 UNLESS OTHERWISE NOTED.
11. BASE MATERIAL SHALL CONFORM TO SUB-SECTION 200-2.5 UNLESS OTHERWISE NOTED.
12. EXPANSION JOINTS (#4) THICK SHALL EXTEND THROUGH THE ENTIRE THICKNESS OF THE SIDEWALK, AT EACH SIDE OF STATE CURB RETURN & AS DIRECTED BY THE ENGINEER TO CONFORM TO EX. CONDITIONS.

NOTE: THIS PLAN IS NOT A LEGAL ENGINEERING DOCUMENT BUT AN ELECTRONIC DUPLICATE. THE SIGNED CITY OF OAKLAND STANDARD DETAILS FOR PUBLIC WORKS CONSTRUCTION IS AVAILABLE FOR PURCHASE FROM THE CONTRACT ADMINISTRATION DEPARTMENT.

CITY OF OAKLAND | ENGINEERING DESIGN SERVICES DIVISION

CONCRETE DRIVEWAY

ENGINEERING DESIGN MANAGER
DATED: JANUARY 2002
REV. DATED: _____
DWG. S-2

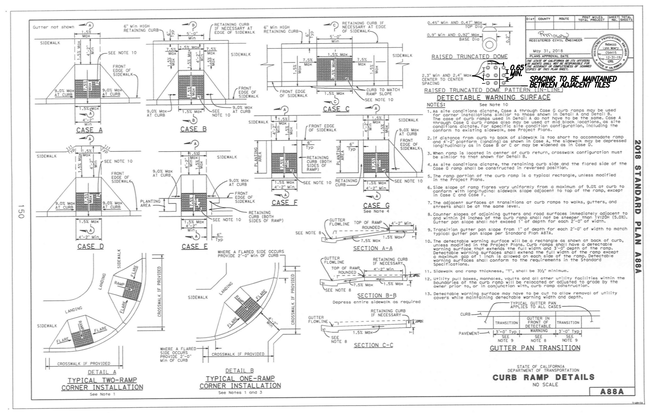

PYATOK
1611 TELEGRAPH AVE.
SUITE 200
OAKLAND, CA 94612
T. 510.465.7010 | F. 510.465.8575
www.pyatok.com

THE UNITY COUNCIL
1900 FRUITVALE AVE
#2A
OAKLAND, CA 94601

LAND SURVEYING & CIVIL ENGINEERING
KISTER, SAVIO & REI
825 SAN PABLO, CA
PINOLE, CA 94564

2700 INTERNATIONAL

OAKLAND, CA 94601

STAMP:

ISSUE SCHEDULE

100 SD	5/11/22
50 DD	7/15/22
100 DD	9/19/22
50 CD	11/18/22
PERMIT SET	12/09/22

REVISION SCHEDULE

NO.	ISSUE	DATE

JOB NUMBER: 1937
DRAWN BY: MLR
CHECKED BY: MLR
ISSUE DATE: 12/09/2022
SCALE: N/A

TITLE:
CITY OF OAKLAND/CALTRANS STANDARD PLANS

SHEET:
C5.01

PRELIMINARY - Not for Construction

© 2019 PYATOK ARCHITECTURE & URBAN DESIGN

REGISTERED PROFESSIONAL ENGINEER
MATTHEW T. RUSH
C 38883
CIVIL
STATE OF CALIFORNIA
Exp. 12/31/23

EROSION CONTROL LEGEND

- INDICATES SILT FENCE TO BE INSTALLED PER SE-1 OF CASQA HANDBOOK, (2012 REVISION)
- INDICATES FIBER ROLL/STRAW WATTLE MATERIAL TO BE INSTALLED PER SE-5 OF CASQA HANDBOOK, (2012 REVISION)
- INDICATES STABILIZED CONSTRUCTION ENTRANCE TO BE INSTALLED PER TC-1 OF CASQA HANDBOOK, (2012 REVISION)
- INDICATES INLET PROTECTION CONSISTING OF FILTER MATERIAL OVER GRATE ANCHORED WITH SAND BAGS, HAY BALES OR FIBER ROLL/STRAW WATTLE MATERIAL INTERCEPTING STORM WATER FLOW PER SE-10 OF CASQA HANDBOOK, (2012 REVISION)

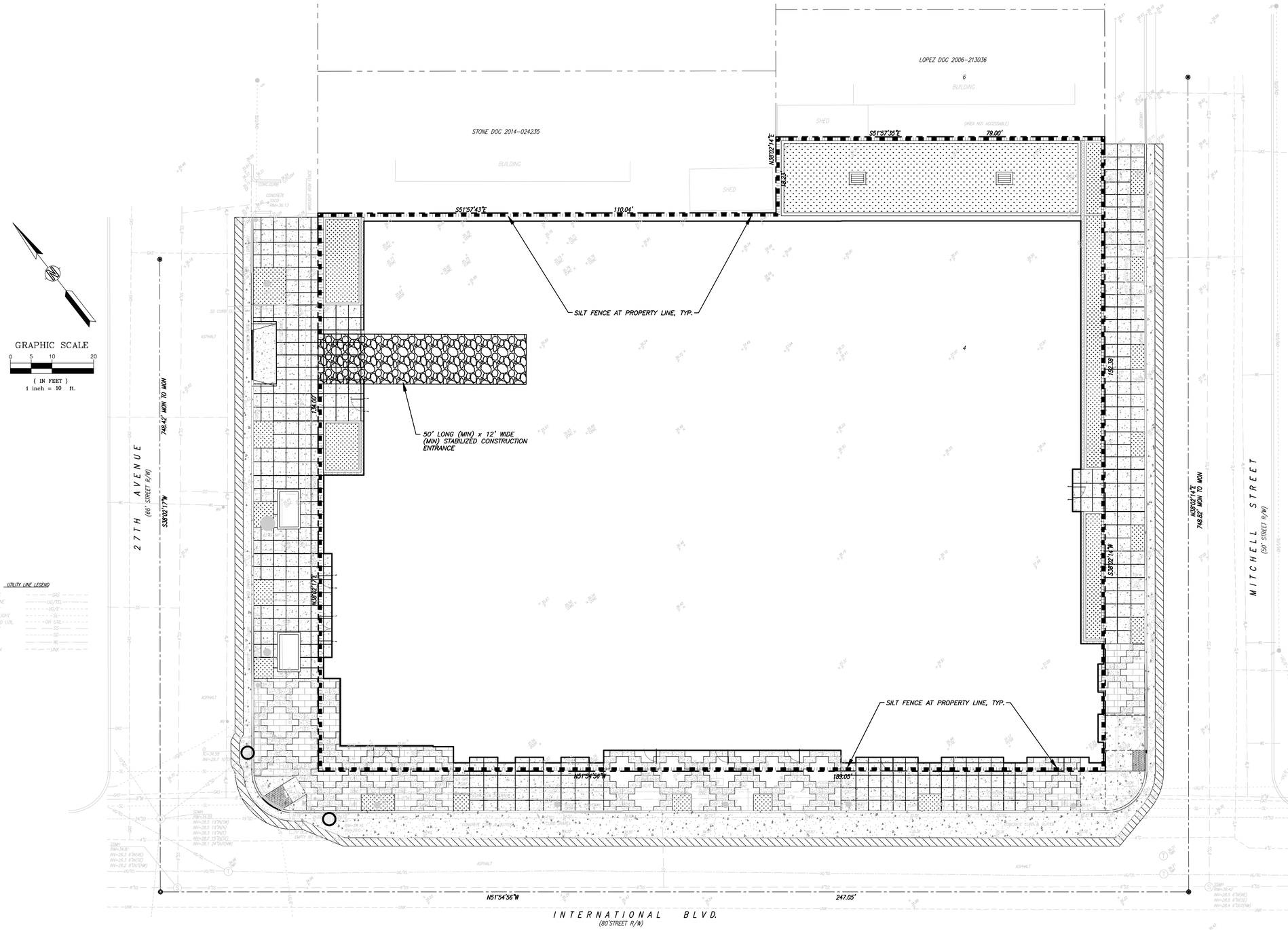

UTILITY LINE LEGEND

GAS LINE	GAS
TELEPHONE	UG/TEL
ELECTRIC	UG/E
STREET LIGHT	SL
OVERHEAD UTIL.	OH UTIL
SANITARY	SS
STORM	SD
WATER	WL
UNKNOWN	UNK

PYATOK
1611 TELEGRAPH AVE.
SUITE 200
OAKLAND, CA 94612
T. 510.465.7010 | F. 510.465.8575
www.pyatok.com

THE UNITY COUNCIL
1900 FRUITVALE AVE
#2A
OAKLAND, CA 94601

LAND SURVEYING & CIVIL ENGINEERING
KISTER, SAVIO & REI
825 SAN PABLO, CA
PINOLE, CA 94564

2700 INTERNATIONAL
OAKLAND, CA 94601

STAMP:

ISSUE SCHEDULE

100 SD	5/11/22
50 DD	7/15/22
100 DD	9/16/22
50 CD	11/18/22
PERMIT SET	12/09/22

REVISION SCHEDULE

NO.	ISSUE	DATE

JOB NUMBER:	1937
DRAWN BY:	MLR
CHECKED BY:	MLR
ISSUE DATE:	12/09/2022
SCALE:	1"=10'

TITLE:
EROSION CONTROL PLAN

SHEET:
C6.00

PRELIMINARY - Not for Construction

© 2019 PYATOK ARCHITECTURE & URBAN DESIGN

REGISTERED PROFESSIONAL ENGINEER
MATTHEW L. REI
C 39863
CIVIL
STATE OF CALIFORNIA

Exp. 12/31/23

GRADING AND EROSION CONTROL NOTES:

1. MATERIALS FROM EXCAVATION IN THE PREMISES THAT ARE NOT NEEDED FOR BACKFILL SHALL BE TRANSPORTED AWAY FROM THE WORK SITE. IF NEEDED FOR FUTURE BACKFILL, THE EXCAVATED MATERIALS MUST BE DEPOSITED IN A SUITABLE AREA AND MUST BE COVERED WITH FIBER MAT, PLASTIC SHEETS, OR OTHER EQUIVALENT PROTECTION FROM WEATHER TO PREVENT EROSION.
2. WHEN RAINING OR WHEN WORK IS NOT BEING DONE, EXPOSED SLOPES OR GROUNDS SHALL BE COVERED WITH WATERPROOF COVERING OR WITH FIBER MAT.
3. ALL SOIL STOCKPILES MUST BE PROTECTED WITH PLASTIC COVER AFTER EVERY WORKDAY.
4. THE STREET AREA MUST BE SWEPT AND CLEANED TO ELIMINATE TRACK OF DIRT DURING THE DAY AND AT THE END OF WORKDAY.
5. CONSTRUCTION PARKING MUST BE LIMITED TO WITHIN THE STABILIZED CONSTRUCTION ENTRANCE OR INSIDE THE OWNER'S PROPERTY.
6. CONSTRUCTION SIGN MUST BE POSTED IN FRONT OF THE PROPERTY AND INSTALLED FIVE FEET FROM THE EDGE OF PAVEMENT OR BACK OF SIDEWALK. THE SIGN MUST CONTAIN THE NAME AND PHONE NUMBER OF THE CONTRACTOR WHERE HE CAN BE CONTACTED TWENTY-FOUR HOURS A DAY, SEVEN DAYS A WEEK (7/24) AND MUST BE VISIBLE AND LEGIBLE FROM THE STREET OR ROAD FRONTING THE PROPERTY. THE SIZE OF THE LETTERING FOR THE NAME AND PHONE NUMBER OF THE CONTRACTOR SHALL BE NOT LESS THAN THREE INCHES IN HEIGHT.
7. TWENTY FOUR HOURS PRIOR TO START OF GRADING, THE APPLICANT MUST NOTIFY IN WRITING THE IMMEDIATE OR ADJACENT NEIGHBORS ABOUT THE IMPENDING GRADING WORK.
8. THE GRADING CONTRACTOR HAS TO OBSERVE STRICTLY THE WORKING HOURS STIPULATED IN THE CONDITIONS OF APPROVAL BY THE CASE PLANNER.
9. EVERY TIME A VEHICLE GETS OUT OF THE WORK AREA AND INTO THE STREET, IT MUST HAVE ITS TIRES WASHED AT A LOCATION INSIDE THE PROPERTY DESIGNATED AS "VEHICLE TIRE WASHING AREA".
10. EROSION CONTROL MEASURES PER: 1) "MANUAL OF STANDARDS FOR EROSION & SEDIMENT CONTROL MEASURES," PUBLISHED BY ABAG AND 2) "EROSION AND SEDIMENT CONTROL BMPs", PUBLISHED BY CALIFORNIA STORM WATER QUALITY ASSOCIATION.
11. NOTWITHSTANDING EROSION CONTROL MEASURES SHOWN ON THIS PLAN, SEDIMENT AND EROSION CONTROL IS REQUIRED FOR ALL AREAS WITH DISTURBED OR GRADED SOIL. AFTER EACH STORM EVENT, ALL SEDIMENT AND EROSION CONTROL MEASURES SHALL BE INSPECTED, MAINTAINED, AND MODIFIED AS REQUIRED.
12. THE DOWNSTREAM STORM SYSTEM(S) SHOULD BE INSPECTED TO VERIFY FREEDOM FROM OBSTRUCTIONS AND PROPER FUNCTION.
13. THIS PLAN MAY NOT COVER ALL THE SITUATIONS THAT ARISE DURING CONSTRUCTION DUE TO UNANTICIPATED FIELD CONDITIONS. VARIATIONS MAY BE MADE TO THESE PLANS IN THE FIELD, SUBJECT TO APPROVAL OF THE GRADING INSPECTOR.
14. ALL EROSION CONTROL MEASURES SHALL BE MAINTAINED UNTIL DISTURBED AREAS ARE STABILIZED AND CHANGES TO THIS EROSION AND SEDIMENT CONTROL PLAN SHALL BE MADE TO MEET FIELD CONDITIONS ONLY WITH THE APPROVAL OF OR AT THE DIRECTION OF THE GRADING INSPECTOR.

TEMPORARY STABILIZED CONSTRUCTION ENTRANCE DESIGN AND CONSTRUCTION SPECIFICATIONS

1. THE MATERIAL FOR CONSTRUCTION OF THE PAD SHALL BE 3" TO 6" STONE.
2. THE THICKNESS OF THE PAD SHALL NOT BE LESS THAN 12".
3. THE WIDTH OF THE PAD SHALL NOT BE LESS THAN THE FULL WIDTH OF ALL POINTS OF INGRESS OR EGRESS.
4. THE LENGTH OF THE PAD SHALL BE AS REQUIRED, BUT NOT LESS THAN 50 FEET.
5. THE ENTRANCE SHALL BE MAINTAINED IN A CONDITION THAT WILL PREVENT TRACKING OR FLOWING OF SEDIMENT ONTO PUBLIC RIGHT-OF-WAY. THIS MAY REQUIRE PERIODIC TOP DRESSING WITH ADDITIONAL STONE AS CONDITIONS DEMAND, AND REPAIR AND/OR CLEANING OF ANY MEASURES USED TO TRAP SEDIMENT. ALL SEDIMENT SPILLED, DROPPED, WASHED OR TRACKED ONTO PUBLIC RIGHT-OF-WAY SHALL BE REMOVED IMMEDIATELY.
6. WHEN NECESSARY, WHEELS SHALL BE CLEANED TO REMOVE SEDIMENT PRIOR TO ENTRANCE ONTO PUBLIC RIGHT-OF-WAY. WHEN WASHING IS REQUIRED, IT SHALL BE DONE ON AN AREA STABILIZED WITH CRUSHED STONE THAT DRAINS INTO AN APPROVED SEDIMENT TRAP OR SEDIMENT BASIN. ALL SEDIMENT SHALL BE PREVENTED FROM ENTERING ANY STORM DRAIN, DITCH, OR WATERCOURSE THROUGH THE USE OF SAND BAGS, GRAVEL, BOARDS OR OTHER APPROVED METHODS.

SILT FENCE/FILTER BARRIER MAINTENANCE NOTES:

1. REPAIR UNDERCUT SILT FENCES.
2. REPAIR OR REPLACE SPLIT, TORN, SLUMPING, OR WEATHERED FABRIC. THE LIFESPAN OF SILT FENCE FABRIC IS GENERALLY 5 TO 8 MONTHS.
3. SILT FENCES THAT ARE DAMAGED AND BECOME UNSUITABLE FOR THE INTENDED PURPOSE SHOULD BE REMOVED FROM THE SITE OF WORK, DISPOSED, AND REPLACED WITH NEW SILT FENCE BARRIERS.
4. SEDIMENT THAT ACCUMULATES IN THE BMP SHOULD BE PERIODICALLY REMOVED IN ORDER TO MAINTAIN BMP EFFECTIVENESS. SEDIMENT SHOULD BE REMOVED WHEN THE SEDIMENT ACCUMULATION REACHES ½ OF THE BARRIER HEIGHT.
5. SILT FENCES SHOULD BE LEFT IN PLACE UNTIL THE UPGRADIENT AREA IS PERMANENTLY STABILIZED. UNTIL THEN, THE SILT FENCE SHOULD BE INSPECTED AND MAINTAINED REGULARLY.

Silt Fence SE-1

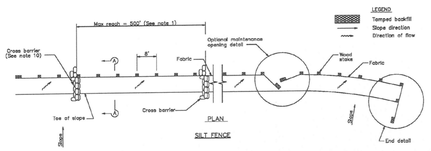

July 2012 | California Stormwater BMP Handbook Construction www.casqa.org | 8 of 9

Silt Fence SE-1

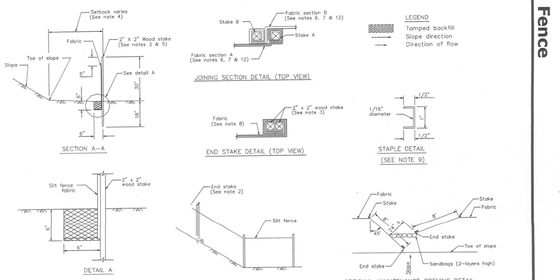

Storm Drain Inlet Protection SE-10

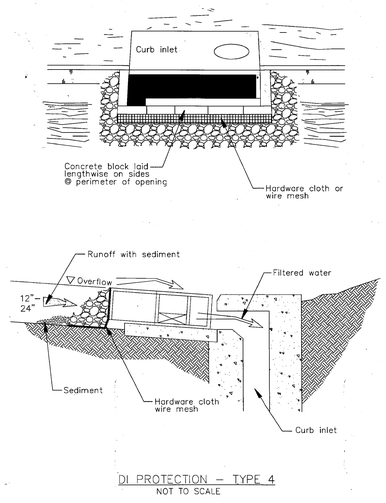

DI PROTECTION – TYPE 4
NOT TO SCALE

Stabilized Construction Entrance/Exit TC-1

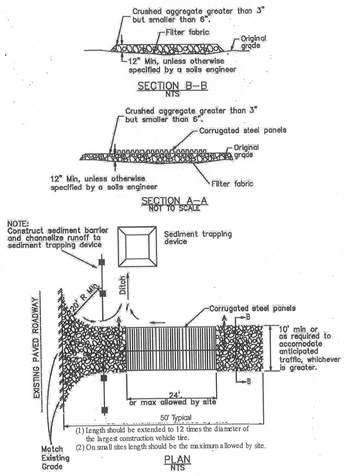

Entrance/Outlet Tire Wash TC-3

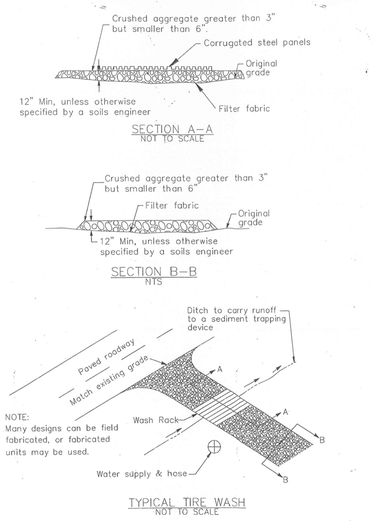

PYATOK
1611 TELEGRAPH AVE.
SUITE 200
OAKLAND, CA 94612
T. 510.465.7010 | F. 510.465.8575
www.pyatok.com

THE UNITY COUNCIL
1900 FRUITVALE AVE
#2A
OAKLAND, CA 94601

LAND SURVEYING & CIVIL ENGINEERING
KISTER, SAVIO & REI
825 SAN PABLO, CA
PINOLE, CA 94564

2700 INTERNATIONAL
OAKLAND, CA 94601

STAMP:

ISSUE SCHEDULE

100 SD	5/11/22
50 DD	7/15/22
100 DD	9/16/22
50 CD	11/18/22
PERMIT SET	12/09/22

REVISION SCHEDULE

NO.	ISSUE	DATE

JOB NUMBER:	1937
DRAWN BY:	MLR
CHECKED BY:	MLR
ISSUE DATE:	12/09/2022
SCALE:	N/A

TITLE:
EROSION CONTROL PLAN DETAIL

SHEET:
C6.01

PRELIMINARY - Not for Construction

© 2019 PYATOK ARCHITECTURE & URBAN DESIGN

REGISTERED PROFESSIONAL ENGINEER
MATTHEW L. REI
C 38883
CIVIL
STATE OF CALIFORNIA
Exp. 12/31/23

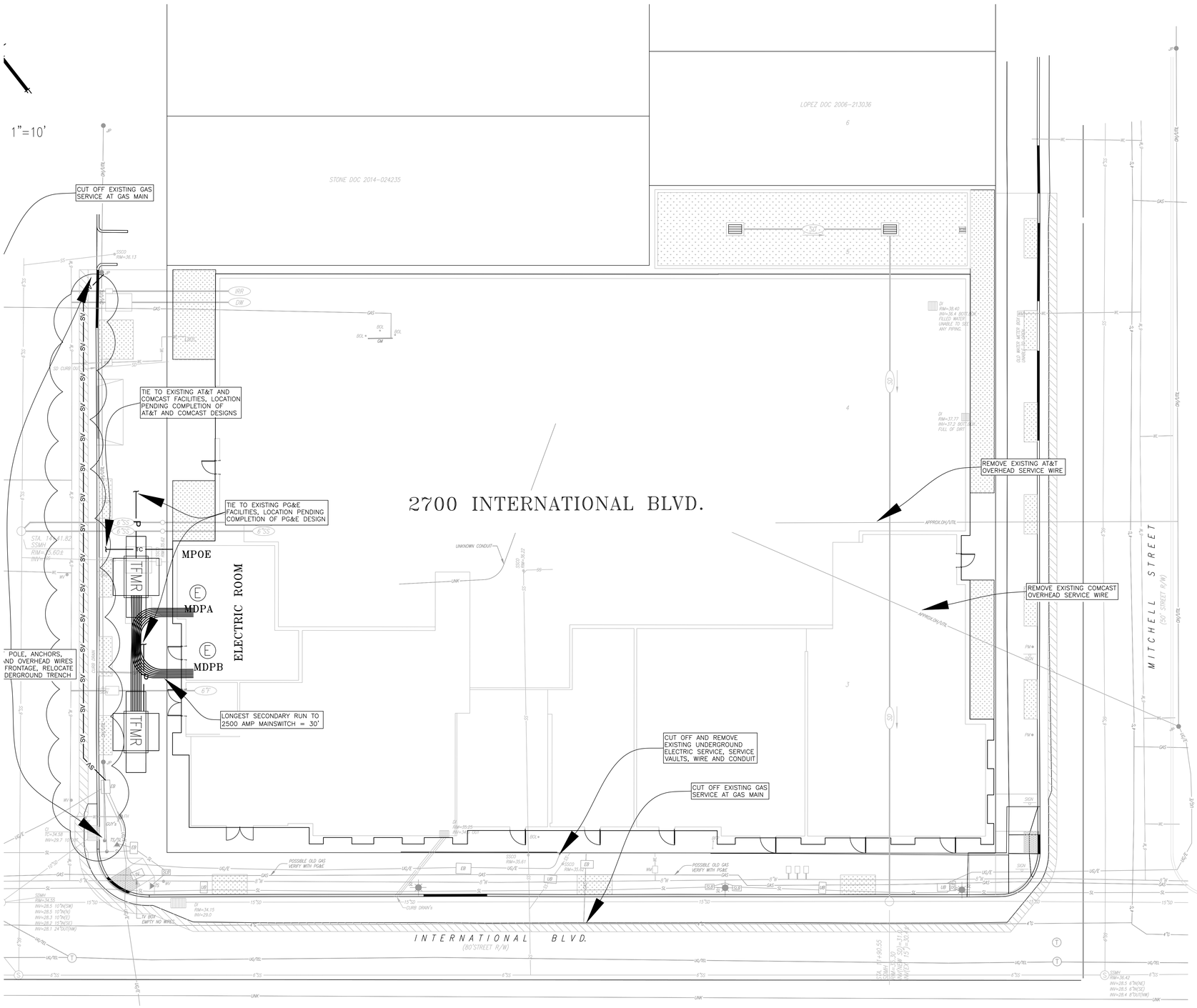

LEGEND

PROPOSED	DESCRIPTION	EXISTING
JT	JOINT TRENCH CENTERLINE	JT
SV	ELECTRIC SERVICE TRENCH CENTERLINE	SV
P	ELECTRIC PRIMARY TRENCH CENTERLINE	P
TC	TELEPHONE/CABLE TRENCH CENTERLINE	TC
GAS	GAS SERVICE TRENCH CENTERLINE	GAS
(E)	ELECTRIC MAIN	
(TP)	TELEPHONE/CABLE SERVICE POINT	
(G)	GAS METER	
TFMR	UCD TRANSFORMER VAULT 4.5'x8.5'x7.5' (PG&E CODE 04-0325)	
5	PG&E 3'X5'X3.5' PRIMARY ENCLOSURE	5
7	PG&E4'6"X8'6"X6' PRIMARY ENCLOSURE (PG&E CODE 04-3411)	7
T	30"x48"x34" AT&T VAULT	T
C	COMCAST PED/VAULT BY COMCAST	C
⊗	PG&E GAS CURB VALVE	
TRENCH OCCUPANTS FOOTAGE	TRENCH DATA	

TYPICAL TRENCH TYPE
MSB A & B SECONDARY
S
34" X 44" (TYP.)

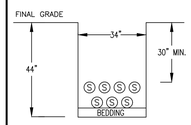

TYPICAL TRENCH TYPE
G
18" X 36" (TYP.)

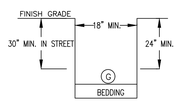

TYPICAL TRENCH TYPE
T, C, TC
12" X 34" (TYP.)

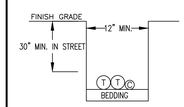

TYPICAL TRENCH TYPE
P, PC, PT, PTC
18" X 54" (TYP.)

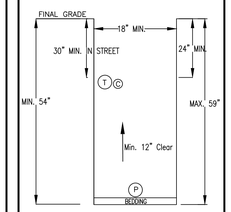

TYPICAL TRENCH SECTION DETAILS
N.T.S.

TRENCH NOTES:

1) TRENCH BOTTOM MUST BE SQUARED.
2) PROVIDE BEDDING, BACKFILL, AND COMPACTION PER PARTICIPATING UTILITY REQUIREMENTS.
3) MAINTAIN 12" CLEARANCE FROM ELECTRIC AND GAS FACILITIES TO TELEPHONE FACILITIES. WIDEN TRENCH AS REQUIRED TO MAINTAIN CLEARANCES.
4) MAINTAIN MINIMUM 12" VERTICAL CLEARNACE FROM WET UTILITIES TO DRY UTILITIES AT VERTICAL CROSSINGS AND 3' MINIMUM CLEARANCE FROM PARALLEL WET UTILITY FACILITIES TO DRY UTILITY FACILITIES.
5) MAXIMUM TRENCH DEPTH IS 59".

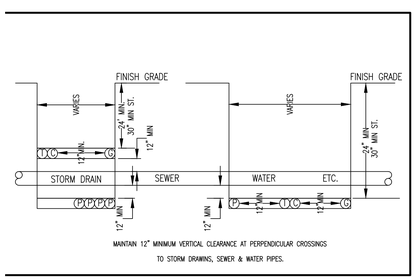

LTERNATIVE TRENCH SEPARATION DETAIL
N.T.S.

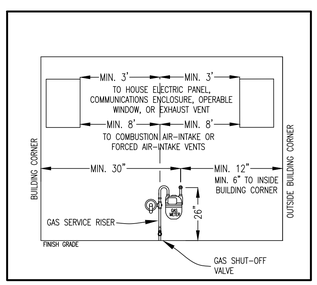

GAS METER SET DETAIL
N.T.S.

MINIMUM SEPARATION AND CLEARANCE REQUIREMENTS

	G	T	T (DB)	C	S	P	SL
G (GAS)	--	12"	12"	12"	6"	12"	6"
T (TELEPHONE) DUCT	12"	--	1"	1"	12"	12"	12"
T (TELEPHONE) DIRECT BURY	12"	1"	--	1"	12"	12"	12"
C (CATV)	12"	1"	1"	--	12"	12"	12"
S (ELECTRIC SECONDARY)	6"	12"	12"	12"	1.5"	3"	1.5"
P (ELECTRIC PRIMARY)	12"	12"	12"	12"	3"	3"	3"
SL (STREETLIGHT)	6"	12"	12"	12"	1.5"	3"	1.5"
FE (NON-PG&E ELECTRIC)	12"	12"	12"	12"	12"	12"	12"

24" MIN COVER (30" IN STREET AREA) - FROM FINAL GRADE
REFER TO JOINT TRENCH CONFIGURATIONS & OCCUPANCY GUIDE
S5453 EXHIBIT B (UPDATED 07-31-15) FOR SPECIFIC
NOTES & DEFINITIONS (COVER, BACKFILL, SHADING & BEDDING)

USA NOTIFICATION
CALL USA 48 HOURS PRIOR TO TRENCHING
DIAL: 811
NAME:
DATE:
TICKET#

PYATOK
1611 TELEGRAPH AVE.
SUITE 200
OAKLAND, CA 94612
T. 510.465.7010 | F. 510.465.8575
www.pyatok.com

THE UNITY COUNCIL
1900 FRUITVALE AVE
#2A
OAKLAND, CA 94601

ALPINE DESIGN
3104 O STREET, #212
SACRAMENTO, CA 95816
OFFICE: 1-916-508-3462
FAX: 1-866-276-2660

2700 INTERNATIONAL
OAKLAND, CA 94601

STAMP:
REGISTERED PROFESSIONAL ENGINEER WILLIAM R. NORMAN No. 65099 EXP. 9-30-23 CIVIL STATE OF CALIFORNIA

ISSUE SCHEDULE

100 SD	5/11/22
50 DD	7/15/22
100 DD	9/16/22
50 CD	11/18/22
PERMIT SET	12/09/22

REVISION SCHEDULE

NO.	ISSUE	DATE

JOB NUMBER:	1937
DRAWN BY:	WRN
CHECKED BY:	
ISSUE DATE:	12/09/2022
SCALE:	

TITLE:
PRELIMINARY JOINT TRENCH COMPOISTE

SHEET:
JT0.1

PRELIMINARY - Not for Construction -

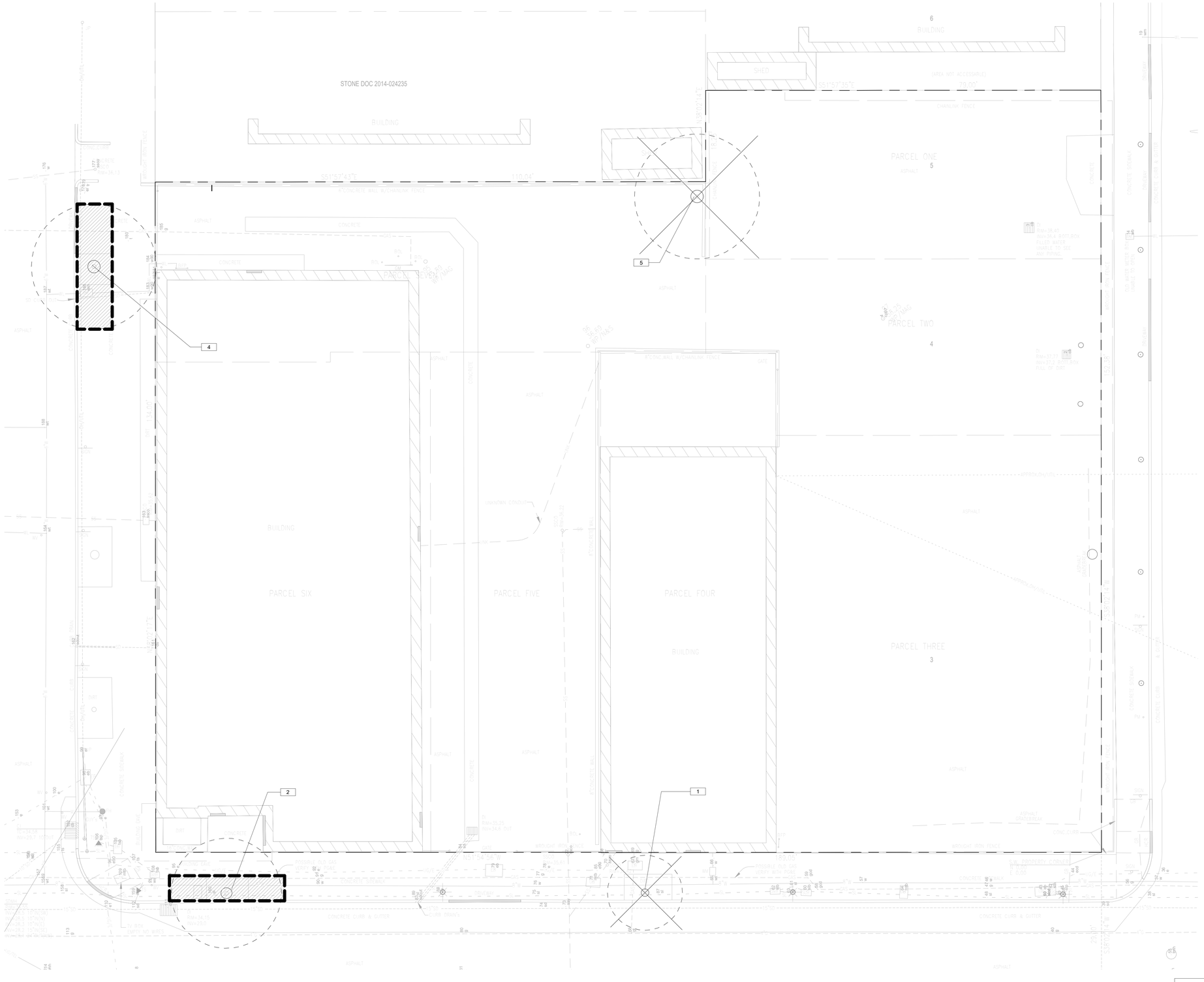

TREE REMOVAL LEGEND

EXISTING TREE TO REMAIN

EXISTING TREE TO BE REMOVED

TREE PROTECTION ZONE

TREE PROTECTION FENCING

TREE PRESERVATION & REMOVAL NOTES

1. ARBORIST REPORT PREPARED BY STEPHEN BATCHELDER ON 7/15/2020. CONTRACTORS TO REVIEW REPORT PRIOR TO BEGINNING WORK AND IMPLIMENT PROTECTION STRATEGIES. REQUEST COPIES OF REPORT FROM OWNER'S REPRESENTATIVE.
2. BEFORE ANY DEMOLITION OR CONSTRUCTION ACTIVITY BEGINS COMPLETELY ENCLOSE THE TREE PROTECTION ZONE (TPZ) AS SHOWN ON TREE PRESERVATION PLAN AND ARBORIST REPORT, INSTALL ALL SPECIFIED TRUNK PROTECTION AND ROOT BUFFERS. FENCING AND OTHER PROTECTIONS TO REMAIN IN PLACE UNTIL GRADING AND CONSTRUCTION IS COMPLETED.
3. CONTRACTOR NOT TO ENGAGE IN ANY CONSTRUCTION ACTIVITY WITHIN THE TPZ WITHOUT THE APPROVAL OF THE PROJECT ARBORIST OF LANDSCAPE ARCHITECT INCLUDING: OPERATING, MOVING OR STORING EQUIPMENT; STORING OR STAGING SUPPLIES OR MATERIALS. DO NOT PERMIT EMPLOYEES TO ENTER FENCED AREAS.
4. DO NOT OPERATE OR PARK VEHICLES OR HEAVY EQUIPMENT WITHIN THE TPZ.
5. STRICTLY MINIMIZE GRADING, CONSTRUCTION AND DEMOLITION WORK TO OCCUR WITHIN THE TPZ. ALL WORK WITHIN TPZ MUST BE MONITORED AND APPROVED BY THE PROJECT ARBORIST.
6. ALL EXCAVATION AND OR TRENCHING WORK DONE WITHIN THE TPZ IS TO BE DONE BY HAND OR AIR TOOLS ONLY.
7. ALL PRUNING, BRANCH TIE BACK, TREE REMOVAL, ROOT PRUNING AND STUMP REMOVAL IS TO BE DIRECTLY SUPERVISED BY AN ISA CERTIFIED ARBORIST.
8. IMMEDIATELY REPORT ANY INJURY DONE TO A TREE DURING CONSTRUCTION TO THE PROJECT ARBORIST SO THAT APPROPRIATE TREATMENTS CAN BE APPLIED.
9. TREE PRUNING NEEDED FOR CLEARANCE DURING CONSTRUCTION MUST BE PERFORMED BY A CERTIFIED ARBORIST AND NOT BY CONSTRUCTION PERSONNEL.
10. ROOT PRUNING REQUIRED FOR CONSTRUCTION PURPOSES MUST RECEIVE THE PRIOR APPROVAL OF, AND BE SUPERVISED BY THE PROJECT ARBORIST.
11. CONTRACTOR TO MINIMIZE DISTURBANCE TO EXISTING TREE ROOTS ON SITE. OUTSIDE OF THE TPZ, ANY ROOT LARGER THAN 1" OBSTRUCTING CONSTRUCTION TO BE CUT CLEANLY WITH A SAW. IF ANY ROOTS GREATER THAN 2" ARE ENCOUNTERED STOP WORK AND CONTACT THE LANDSCAPE ARCHITECT/PROJECT ARBORIST IMMEDIATELY.

AIRSPADE TRENCHING NOTES:

1. ALL TRENCHING AROUND TREES IS TO BE COMPLETED WITH THE USE OF AN AIRSPADE TO A DEPTH NEEDED TO EXPOSE ROOTS FOR REVIEW.
2. ALL AIRSPADE WORK IS TO BE COMPLETED BY AN EXPERIENCED TREE COMPANY UNDER THE SUPERVISION OF A CERTIFIED ARBORIST.
3. SOIL FROM AIRSPADE WORK IS TO BE COLLECTED AND STORED ON SITE TO BE RETURNED TO THE EXPOSED ROOT AREAS ONCE TRENCHING WORK IS COMPLETED.
4. REQUIRED CUTTING OF ANY ROOTS ENCOUNTERED DURING THE TRENCHING PROCESS IS ONLY TO BE DONE AFTER A CERTIFIED ARBORIST HAS MADE A VISUAL ASSESSMENT AND GIVEN DIRECTION ON THE CUTTING.
5. ROOTS EXPOSED DURING THE TRENCHING PROCESS MUST BE PROTECTED AS MUCH AS POSSIBLE. COVER EXPOSED ROOTS WITH BURLAP AND KEEP MOIST. ONCE THE TRENCHING WORK HAS BEEN COMPLETED, RETURN THE EXCAVATED SOIL TO THE EXPOSED ROOTS AND INSTALL MULCH AS A PROTECTIVE LAYER.

EXISTING TREE INVENTORY

TAG	Type	COMMON NAME	DBH
1	1- Meterosidros exelsa	New Zealand Christmas Tree	25"
2	2-Metrosideros exelsa	New Zealand Christmas Tree	22
4	4-Cinnamomum camphora	Camphor Tree	20
5	Juniperus chinensis	Hollywood Juniper	23

0 4 8 12 16ft

PYATOK
1611 TELEGRAPH AVE.
SUITE 200
OAKLAND, CA 94612
T. 510.465.7010 | F. 510.465.8575
www.pyatok.com

THE UNITY COUNCIL

2700 INTERNATIONAL

OAKLAND, CA 94601

STAMP:

LICENSED LANDSCAPE ARCHITECT
CHRISTOPHER W. KENT 6161
Signature
MAY 31, 2024
Renewal Date
DECEMBER 02, 2022
Date
STATE OF CALIFORNIA

ISSUE SCHEDULE

100 SD	5/11/22
50 DD	7/15/22
100 DD	9/16/22
50 CD	11/18/22
BUILDING PERMIT SET	12/09/22

REVISION SCHEDULE

NO.	ISSUE	DATE

JOB NUMBER:	0001
DRAWN BY:	EM
CHECKED BY:	CK
ISSUE DATE:	12/09/22
SCALE:	1/8" = 1'-0"

TITLE:

TREE PRESERVATION AND REMOVAL PLAN

SHEET:

L1.01

PRELIMINARY - Not for Construction -

© 2019 PYATOK ARCHITECTURE & URBAN DESIGN

12/7/2022 10:36:39 AM

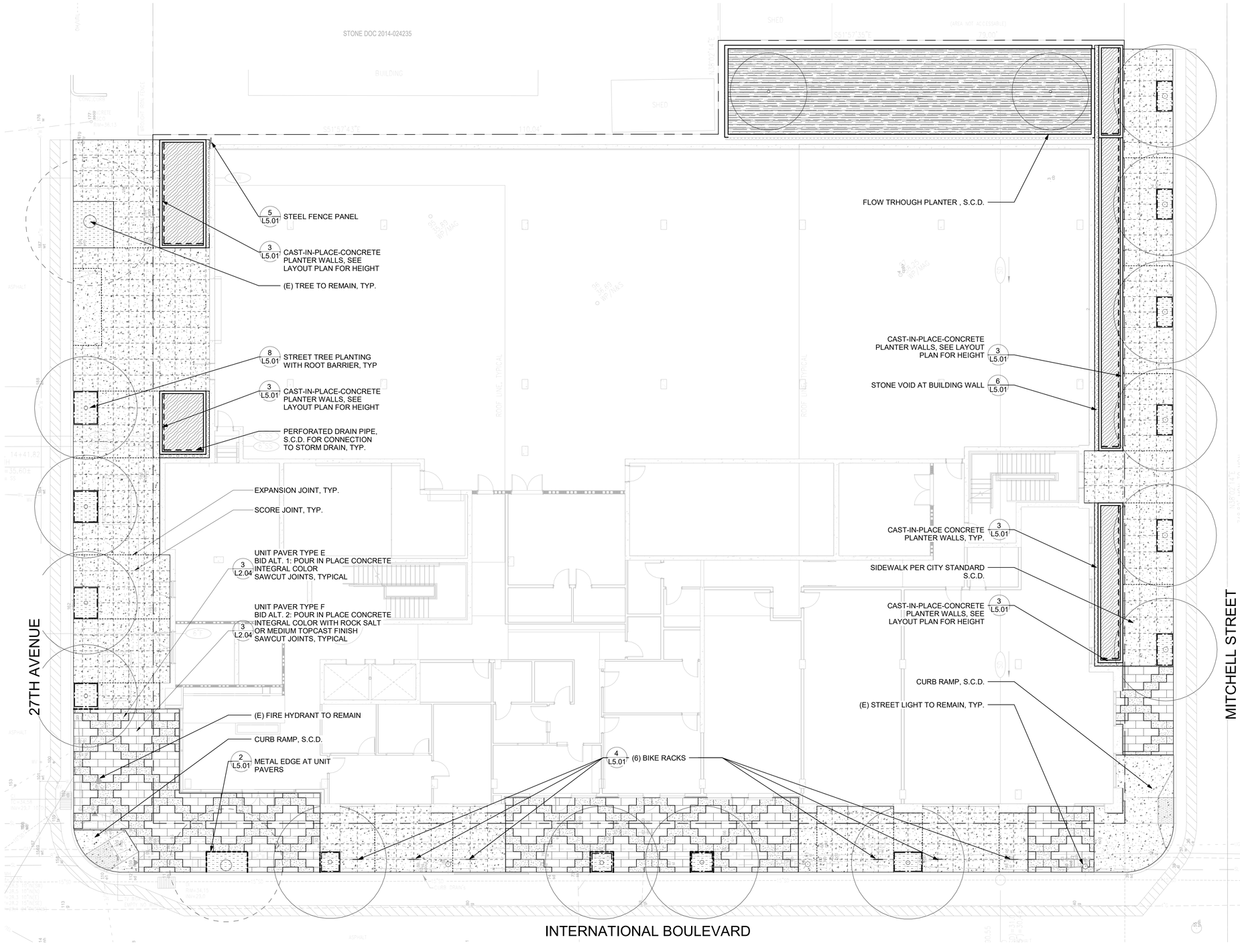

GENERAL SYMBOLS & ABBREVIATIONS

	PROPERTY LINE
	POINT OF BEGINNING
	CENTERLINE
	EXPANSION JOINT
	SCORE JOINT
	ROOT BARRIER
	STEEL EDGING
	PERF PIPE
EQ.	EQUAL
O.C.	ON CENTER
N.I.C.	NOT IN CONTRACT
NO.	NUMBER
TYP.	TYPICAL
QTY.	QUANTITY
V.I.F.	VERIFY IN FIELD
S.A.D.	SEE ARCHITECTURAL DRAWINGS
S.C.D.	SEE CIVIL DRAWINGS
S.S.D.	SEE STRUCTURAL DRAWINGS
S.M.D.	SEE MECHANICAL DRAWINGS
S.E.D.	SEE ELECTRICAL DRAWINGS
S.B.E.D.	SEE BUILDING ENVELOPE DRAWINGS
1 A101	DETAIL CALLOUT

LANDSCAPE MATERIAL LEGEND

CITY STANDARD SIDEWALK/ PLAIN GRAY CONCRETE, S.C.D.	DECORATIVE GRAVEL	PLANTING AREA
UNIT PAVERS	DECOMPOSED GRANITE	STORMWATER TREATMENT AREA, S.C.D.

0 4 8 12 16ft

PYATOK
1611 TELEGRAPH AVE.
SUITE 200
OAKLAND, CA 94612
T. 510.465.7010 | F. 510.465.8575
www.pyatok.com

THE UNITY COUNCIL

2700 INTERNATIONAL
OAKLAND, CA 94601

STAMP:
LICENSED LANDSCAPE ARCHITECT
CHRISTOPHER W. KENT
MAY 31, 2024
DECEMBER 02, 2022
STATE OF CALIFORNIA

ISSUE SCHEDULE

100 SD	5/11/22
50 DD	7/15/22
100 DD	9/16/22
50 CD	11/18/22
BUILDING PERMIT SET	12/09/22

REVISION SCHEDULE

NO.	ISSUE	DATE

JOB NUMBER:	0001
DRAWN BY:	EM
CHECKED BY:	CK
ISSUE DATE:	12/09/22
SCALE:	1/8" = 1'-0"

TITLE:
LANDSCAPE MATERIALS PLAN LEVEL 1

SHEET:
L2.01

PRELIMINARY - Not for Construction -

© 2019 PYATOK ARCHITECTURE & URBAN DESIGN

12/7/2022 10:36:39 AM

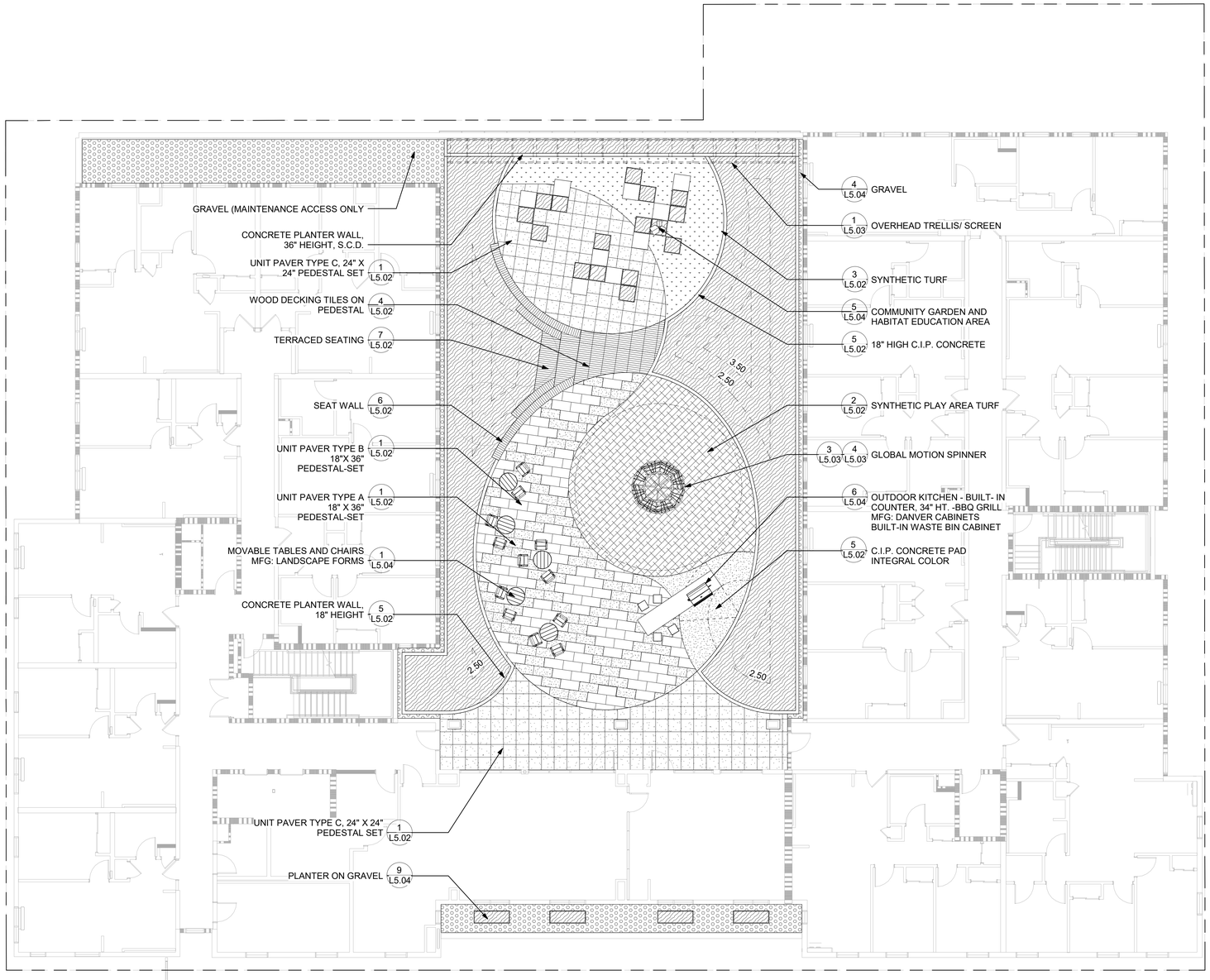

LANDSCAPE MATERIALS LEGEND

- INTEGRAL COLORED CONCRETE PAVING
- UNIT PAVERS
- DECORATIVE GRAVEL
- WOODEN DECKING
- SYNTHETIC TURF
- SYNTHETIC PLAY AREA TURF
- PLANTING AREA
- DECORATIVE GRAVEL
- MOVEABLE CHAIRS (12)
- MOVEABLE TABLE (5)
- BUILT-IN GRILL (1)
- MOVABLE STOOL (4)

0 4 8 12 16ft

12/7/2022 10:36:41 AM

PYATOK
1611 TELEGRAPH AVE.
SUITE 200
OAKLAND, CA 94612
T. 510.465.7010 | F. 510.465.8575
www.pyatok.com

THE UNITY COUNCIL

2700 INTERNATIONAL

OAKLAND, CA 94601

STAMP:

LICENSED LANDSCAPE ARCHITECT
CHRISTOPHER W. KENT KENT
Signature
MAY 31, 2024
Renewal Date
DECEMBER 02, 2022
Date
STATE OF CALIFORNIA

ISSUE SCHEDULE

100 SD	5/11/22
50 DD	7/15/22
100 DD	9/16/22
50 CD	11/18/22
BUILDING PERMIT SET	12/09/22

REVISION SCHEDULE

NO.	ISSUE	DATE

JOB NUMBER:	0001
DRAWN BY:	Author
CHECKED BY:	Checker
ISSUE DATE:	12/09/22
SCALE:	1/8" = 1'-0"

TITLE:

LANDSCAPE MATERIALS PLAN- LEVEL 2

SHEET:

L2.02

PRELIMINARY - Not for Construction -

© 2019 PYATOK ARCHITECTURE & URBAN DESIGN

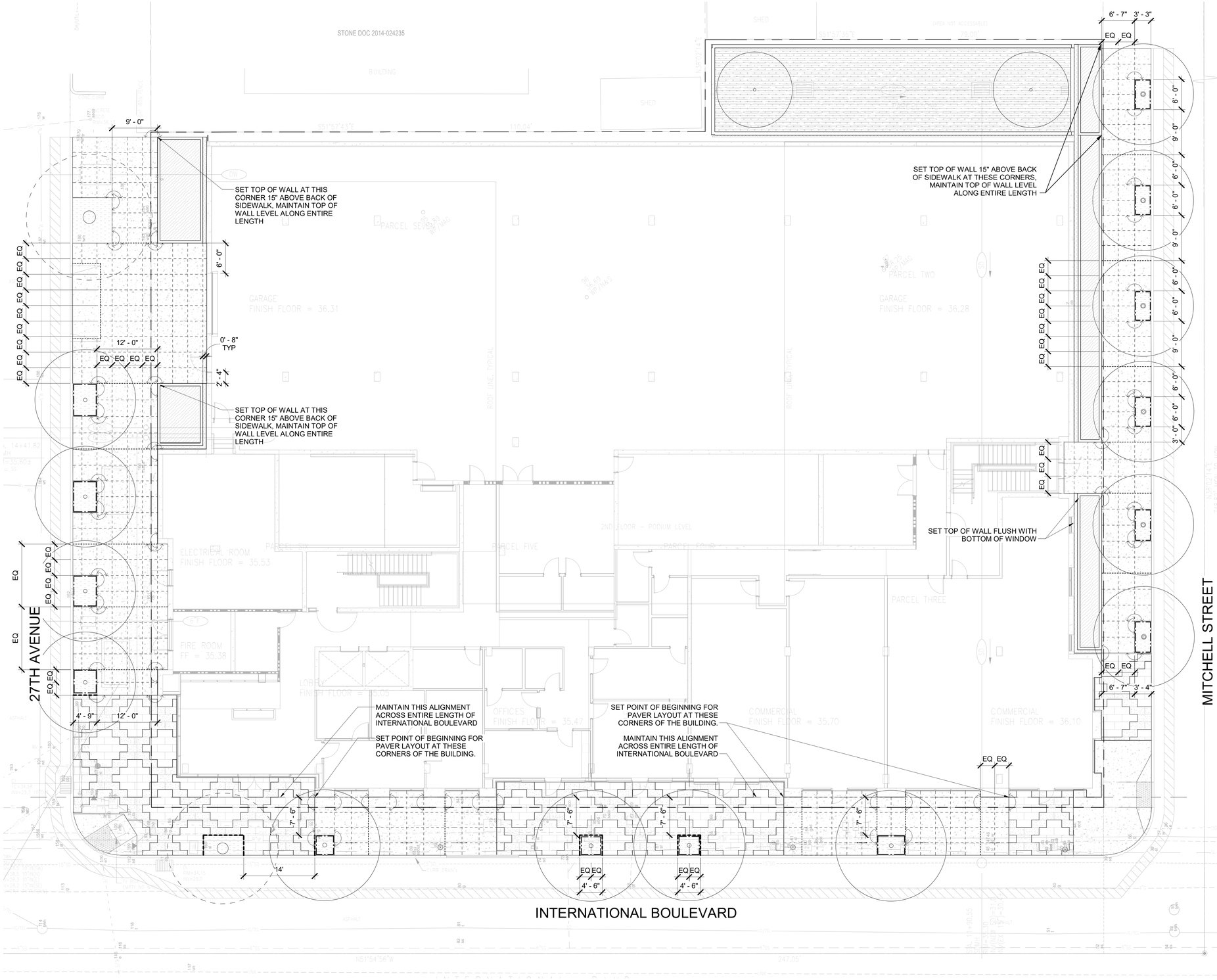

LANDSCAPE GENERAL LAYOUT NOTES

1. EXISTING SITE INFORMATION IS PROVIDED BY OTHERS. LANDSCAPE ARCHITECT ASSUMES NO RESPONSIBILITY OR LIABILITY FOR COMPLETENESS OR ACCURACY OF PLANS PROVIDED BY OTHERS.
2. 'TYP' OR TYPICAL MEANS THAT THE CONDITION IS REPRESENTATIVE FOR SIMILAR CONDITIONS THROUGHOUT, UNLESS OTHERWISE NOTED. DETAILS ARE USUALLY NOTED 'TYP' ONLY ONCE WHEN THEY FIRST OCCUR.
3. NOTES AND SYMBOLS ON ONE DRAWING APPLY TO OTHER SIMILAR DETAILS AND CONDITIONS.
4. BECOME ACQUAINTED WITH SUBGRADE UTILITIES, PIPES AND STRUCTURES. SHOULD UTILITIES OR OTHER WORK NOT SHOWN ON THE PLANS BE FOUND DURING EXCAVATIONS, PROMPTLY NOTIFY OWNER'S REPRESENTATIVE. FAILURE TO DO SO WILL MAKE CONTRACTOR LIABLE FOR DAMAGE ARISING FORM HIS OPERATIONS SUBSEQUENT TO DISCOVERY OF SUCH UTILITIES NOT SHOWN ON PLANS.
5. DIMENSIONS ARE FROM OUTSIDE FACE OF BUILDING OR WALLS, UNLESS OTHERWISE NOTED, AND ARE TO BE VERIFIED IN THE FIELD PRIOR TO CONSTRUCTION AND MAJOR EXCAVATION. WRITTEN DIMENSIONS TAKE PRECEDENCE OVER SCALING.
6. UNLESS OTHERWISE NOTED, ANGLES TO BE RIGHT ANGLES, ARCS WHICH APPEAR TANGENT AND UNIFORM ARE TO BE TANGENT AND UNIFORM, LINES WHICH APPEAR PARALLEL ARE TO BE PARALLEL, AND ITEMS WHICH APPEAR CENTERED TO BE CENTERED, MAINTAIN LINES TRUE, LEVEL, PLUMB, AND SQUARE.
7. REFER TO GRADING PLANS FOR GRADING AND DRAINAGE STRUCTURES PRIOR TO INSTALLATION OF WALKS, WALLS, FOOTINGS, AND OTHER STRUCTURES.
8. LANDSCAPE ARCHITECT TO APPROVE LAYOUT IN THE FIELD PRIOR TO INSTALLATION OF FORMS OR GRADING FOR LANDSCAPE WORK.
9. LOCATE ELECTRICAL JUNCTION BOXES FOR LIGHTS IN PLANTING AREAS UNLESS SHOWN OTHERWISE. LAYOUT TO BE APPROVED BY THE OWNER'S REPRESENTATIVE PRIOR TO TRENCHING.
10. CAREFULLY REVIEW LANDSCAPE IRRIGATION PLANS AND NOTES TO IDENTIFY LOCATIONS WHERE PIPE, SLEEVES, SANDBED OR CONDUIT MUST BE PLACED PRIOR TO PLACEMENT OF FORMWORK FOR INSTALLATION OF CONCRETE, OTHER PAVING, OR WALLS.
11. QUANTITIES PROVIDED ARE FOR INFORMATION ONLY, VERIFY QUANTITIES AND NOTIFY OWNER OF DISCREPANCIES.

PYATOK
1611 TELEGRAPH AVE.
SUITE 200
OAKLAND, CA 94612
T. 510.465.7010 | F. 510.465.8575
www.pyatok.com

THE UNITY COUNCIL

2700 INTERNATIONAL
OAKLAND, CA 94601

STAMP:
LICENSED LANDSCAPE ARCHITECT
CHRISTOPHER M. KERN
MAY 31, 2024
Renewal Date
DECEMBER 02, 2022
7941
STATE OF CALIFORNIA

ISSUE SCHEDULE

100 SD	5/11/22
50 DD	7/15/22
100 DD	9/16/22
50 CD	11/18/22
BUILDING PERMIT SET	12/09/22

REVISION SCHEDULE

NO.	ISSUE	DATE

JOB NUMBER:	0001
DRAWN BY:	Author
CHECKED BY:	Checker
ISSUE DATE:	12/09/22
SCALE:	1/8" = 1'-0"

TITLE:
LANDSCAPE LAYOUT PLAN- LEVEL 1

SHEET:
L3.01

PRELIMINARY - Not for Construction -

© 2019 PYATOK ARCHITECTURE & URBAN DESIGN

12/7/2022 10:36:42 AM

0 4 8 12 16ft

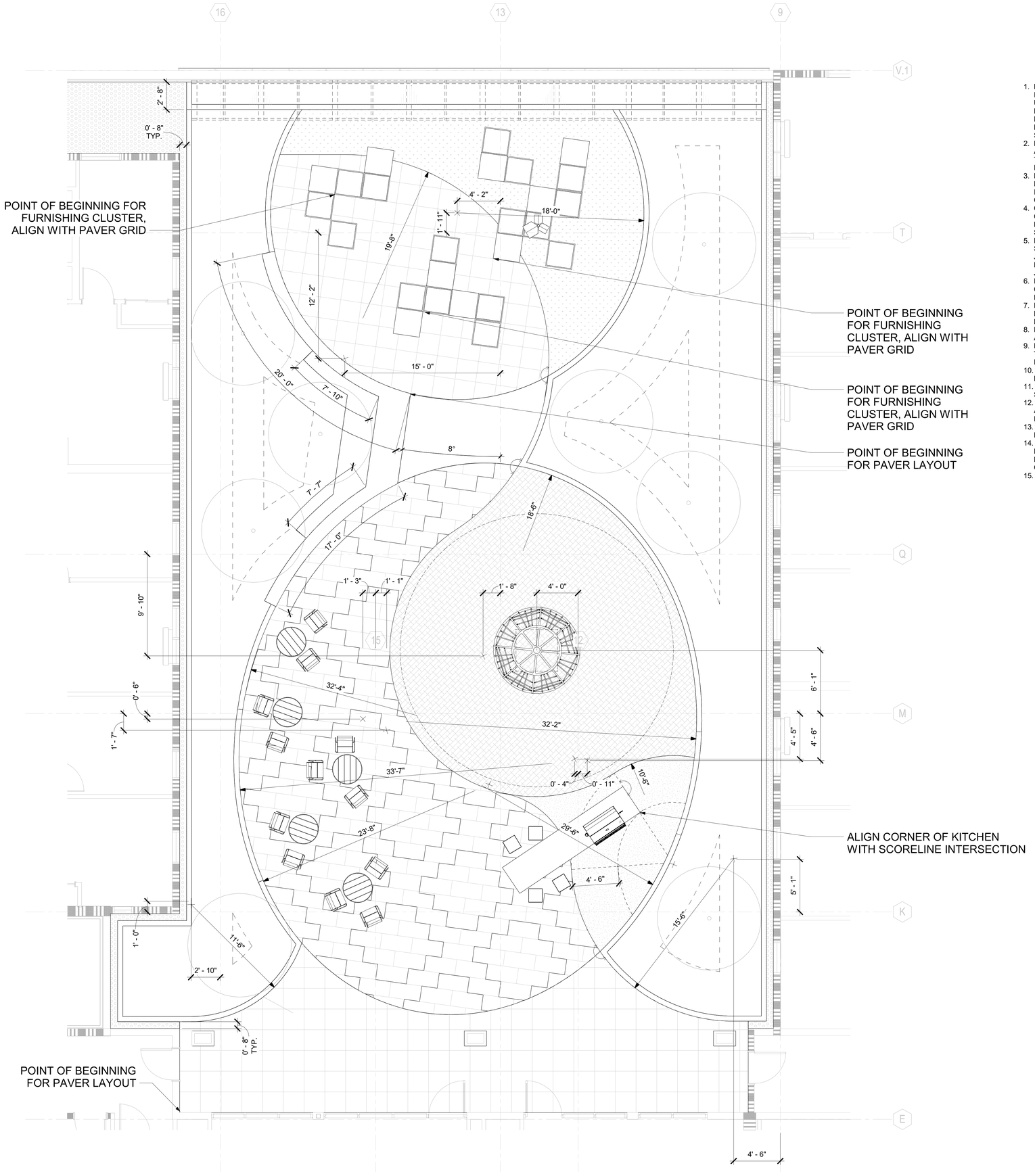

LANDSCAPE GENERAL LAYOUT NOTES - ON STRUCTURE

1. BECOME AQUAINTED WITH UTILITIES, PIPES AND STRUCTURES INCLUDING THOSE IN ABOVE THE STRUCTURAL SLAB. SHOULD UTILITIES OR OTHER WORK NOT SHOWN ON THE PLANS BE FOUND DURING THE WORK, PROMPTLY NOTIFY OWNER'S REPRESENTATIVE. FAILURE TO DO SO WILL MAKE CONTRACTOR LIABLE FOR ANY AND ALL DAMAGE ARISING FROM OPERATIONS SUBSEQUENT TO DISCOVER OF SUCH UTILITIES.
2. REFER TO PLUMBING AND UTILITY PLANS AND DRAWINGS BY ARCHITECTS AND ENGINEERS FOR DRAINAGE STRUCTURES PRIOR TO INSTALLATION OF STRUCTURAL FOAM, WALKS, WALLS, FOOTINGS, AND OTHER STRUCTURES.
3. REFER TO GRADING PLANS FOR PODIUM SURFACE GRADES. ENSURE SUFFICIENT CLEARANCE FOR UTILITIES, DRAINAGE AND IRRIGATION ELEMENTS BENEATH PAVEMENT MATERIALS. SHOULD CONFLICTS ARISE REVIEW WITH OWNER'S REPRESENTATIVE.
4. OWNER'S REPRESENTATIVE TO APPROVE ALL LAYOUT PRIOR TO CONSTRUCTION. AT TIME OF SITE VISIT, ALIGNMENT OF MAJOR LANDSCAPE ELEMENTS TO BE CLEARLY AND COMPLETELY STAKED.
5. PROVIDE VERTICAL SCORE JOINTS IN PLANTING WALLS AND SEATWALLS APPROXIMATELY 8'-0" O.C. AND VERTICAL EXPANSION JOINTS 30'-0" O.C. ALIGN VERTICAL SCORE JOINTS WITH PAVEMENT JOINTS WHERE FEASIBLE. ALIGN VERTICAL EXPANSION JOINTS WITH PAVEMENT EXPANSION JOINTS WHERE FEASIBLE.
6. FOR HARDWARE REQUIREMENTS OF FENCES AND GATES, COORDINATE WITH ORNAMENTAL METAL, HANDRAILS AND RAILINGS SPECIFICATIONS RESPECTIVELY, S.A.D.
7. FOR LOCATION AND ORIENTATION OF DRAIN INLETS IN PAVEMENT/DECKING, AND/OR PLANTING AREAS, SEE LANDSCAPE PLANS.
8. FOR IRRIGATION CONDUIT AND SLEEVES, SEE IRRIGATION PLANS AND NOTES.
9. PLANTER WALLS ADJACENT TO BUILDING WALLS TO BE PARALLEL TO BUILDING WALLS; FACE OF PLANTER WALL TO BE 1'-0" FROM FACE OF FINISHED WALL SURFACE, TYP. S.A.D.
10. FOR PLANTER WALL CONNECTIONS AND WATERPROOFING, SEE BUILDING ENVELOPE DRAWINGS.
11. ENSURE ALL PLANTER BOTTOMS HAVE SUFFICIENT SLOPE AND SURFACE OPENINGS TO ALLOW PROPER DRAINAGE OF SOIL MASS.
12. DO NOT INSTALL ANY WORK ON-STRUCTURE PRIOR TO REVIEW OF AND COMPLETION OF WORK SHOWN ON THE WATERPROOFING DAND BUILDING ENVELOPE PLANS.
13. SEE STRUCTURAL DRAWINGS AND BUILDING ENVELOPE DRAWINGS FOR ON-STRUCTURE FOOTINGS AND ATTACHMENTS.
14. SEE STRUCTURAL AND BUILDING ENVELOPE/WATERPROOFING DRAWINGS FOR WATERPROOFING SYSTEM, DRAINAGE LAYERS, PROTECTION SLAB, SLAB PENETRATIONS AND ALL DRAIN CONNECTIONS.
15. SEE PLUMBING DRAWINGS FOR DRAIN SPECIFICATIONS.

PYATOK
1611 TELEGRAPH AVE.
SUITE 200
OAKLAND, CA 94612
T. 510.465.7010 | F. 510.465.8575
www.pyatok.com

THE UNITY COUNCIL

2700 INTERNATIONAL
OAKLAND, CA 94601

STAMP:
LICENSED LANDSCAPE ARCHITECT
CHRISTOPHER W. KENT
No. 6065
MAY 31, 2024
Renewal Date
DECEMBER 02, 2022
Date
STATE OF CALIFORNIA

ISSUE SCHEDULE

100 SD	5/11/22
50 DD	7/15/22
100 DD	9/16/22
50 CD	11/18/22
BUILDING PERMIT SET	12/09/22

REVISION SCHEDULE

NO.	ISSUE	DATE

JOB NUMBER:	0001
DRAWN BY:	Author
CHECKED BY:	Checker
ISSUE DATE:	12/09/22
SCALE:	1/4" = 1'-0"

TITLE:
LANDSCAPE LAYOUT PLAN- LEVEL 2

SHEET:
L3.02

PRELIMINARY - Not for Construction -

© 2019 PYATOK ARCHITECTURE & URBAN DESIGN

0 2 4 6 16ft

12/7/2022 10:36:44 AM

PLANT LIST

SYMBOL	QTY	BOTANICAL NAME	COMMON NAME	CONTAINER SIZE	SPACING	WATER USE	DROUGHT TOLERANT
TREE							
CeOc	4	CERCIS OCCIDENTALIS	WESTERN REDBUD	24" BOX	18'-0"	VERY LOW	Yes
GiBi	4	GINKGO BILOBA 'AUTUMN GOLD'	MAIDENHAIR TREE	36" BOX	30'-0"	MODERATE	No
JaMi	8	JACARANDA MIMOSIFOLIA 'BONSAI BLUE'	BONSAI BLUE JACARANDA	15 GAL	8'-0"	MODERATE	Yes
TiTo	10	TILIA TOMENTOSA 'STERLING'	STERLING SILVER LINDEN	36" BOX	20'-0"	LOW	Yes
SUCCULENT							
AP	6	AGAVE PARRYI	ARTICHOKE AGAVE	5 GAL	2'	LOW	Yes
AS	10	AGAVE SHAWII	SHAW'S AGAVE	5 GAL	2'	LOW	Yes
AA	11	ALOE ARBORESCENS	KRANTZ ALOE	5 GAL	4'-0"	LOW	Yes
AB	3	ALOE BARBERAE	TREE ALOE	15 GAL	15'-0"	LOW	Yes
e	8	ECHINOPSIS PACHINOI	SAN PEDRO CACTUS	15 GAL	3'-0"	LOW	Yes
p	8	PACHYCEREUS MARGINATUS	FENCEPOST CACTUS	15 GAL	3'-0"	LOW	Yes
SHRUB							
AL	7	ALOYSIA CITRODORA	LEMON VERBENA	5 GAL	3'	LOW	Yes
AH	1	ALYOGYNE HUEGELII	BLUE HIBISCUS	15 GAL	6'-0"	LOW	Yes
AP	1	ARTEMISIA 'POWIS CASTLE'	WORMWOOD	1 GAL	4'-0"	LOW	Yes
AC	2	ARTICHOKE 'CARCIOFO ROMANESCO'	ARTICHOKE OF ROME	5 GAL	4'-0"	LOW	Yes
BR	50	BERBERIS REPENS	CREEPING BARBERRY	5 GAL	1'-6"	LOW	Yes
CG	25	CEANOTHUS GLORIOSUS 'ANCHOR BAY'	POINT REYES CEANOTHUS	5 GAL	4'-0"	LOW	Yes
GE	2	GARRYA ELLIPTICA	COAST SILKTASSEL	15 GAL	8'-0"	LOW	Yes
LI	3	LAVANDULA X. INTERMEDIA 'PROVENCE'	PROVENCE LAVENDER	4" CONT	3'-0"	LOW	Yes
LH	17	LOMANDRA HYSTRIX 'TROPICBELLE'	TROPIC BELLE MAT RUSH	1 GAL	3'-6"	LOW	Yes
MA	6	MAHONIA AQUIFOLIUM	OREGON GRAPE	5 GAL	5'-0"	MODERATE	Yes
PL	4	PASSIFLORA LOEFGRENII X CAERULEA	PASSIONFLOWER	5 GAL	4'-0"	LOW	Yes
RE	18	RHAMNUS CALIFORNICUS 'EVE CASE'	EVE CASE COFFEEBERRY	5 GAL	6'-0"	LOW	Yes
RA	10	RIBES AUREUM	GOLDEN CURRANT	5 GAL	4'-0"	LOW	Yes
RS	9	RIBES SANGUINEUM 'CLAREMONT'	FLOWERING CURRANT	5 GAL	6'-0"	LOW	Yes
RV	17	RIBES VIBURNIFOLIUM	EVERGREEN CURRANT	5 GAL	4'-0"	LOW	Yes
RC	9	ROSA CALIFORNICA	CALIFORNIA WILD ROSE	5 GAL	4'-0"	LOW	Yes
RO	2	ROSMARINUS OFFICINALIS 'CHEF'S CHOICE'	CHEF'S CHOICE ROSEMARY	1 GAL	3'-0"	LOW	Yes
PERENNIAL							
AC	37	ACACIA COGNATA VAR COUSIN ITT	COUSIN ITT RIVER WATTLE	5 GAL	4'-0"	LOW	Yes
s	5	AGASTACHE MEXICANA 'SANGRIA'	MEXICAN HYSSOP	1 GAL	3'-0"	LOW	Yes
AE	48	ASPIDISTRA ELATIOR	CAST IRON PLANT	5 GAL	2'-0"	LOW	Yes
EC	13	ENCELIA CALIFORNICA	CALIFORNIA SUNFLOWER	5 GAL	4'-0"	LOW	Yes
EU	8	ERIOGONUM UMBELLATUM	SULFUR BUCKWHEAT	1 GAL	2'-0"	LOW	Yes
ID	97	IRIS DOUGLASIANA 'LIGHT LAVENDER/BLUE'	DOUGLAS IRIS	1 GAL	2'	LOW	Yes
m	3	MATRICARIA CHAMOMILIA	GERMAN CHAMOMILE	1 GAL	1'-6"	LOW	Yes
TC	3	THYMUS CITRIODORUS	LEMON THYME	1 GAL	2'-0"	LOW	Yes
VD	21	VERBENA 'DE LA MINA'	LILAC VERBENA	1 GAL	2'-0"	LOW	Yes
GROUNDCOVER							
CD	125	CLINOPODIUM DOUGLASII	YERBA BUENA	1 GAL	2' 0"	LOW	Yes
EG	28	ERIGERON GLAUCUS	SEASIDE DAISY	5 GAL	2'-0"	LOW	Yes
MS	11	MENTHA SPICATA VAR. CRISPA	MOROCCAN MINT	1 GAL	3'-0"	LOW	Yes
SO	1	SALVIA OFFICIONALIS	CULINARY SAGE	1 GAL	3'-0"	LOW	Yes
GRASS							
DC	20	DESCHAMPSIA CESPITOSA	TUFTED HAIR GRASS	1 GAL	2'-0"	LOW	Yes
FC	36	FESTUCA CALIFORNICA	CALIFORNIA FESCUE	1 GAL	2'-6"	LOW	Yes
FM	27	FESTUCA MAIREI	ATLAS FESCUE	1 GAL	2'-0"	LOW	Yes

PLANTING NOTES

1. VERIFY LOCATION OF SUBSURFACE UTILITIES, PIPES AND STRUCTURES. SHOULD UTILITIES OR OTHER WORK NOT SHOWN ON THE PLANS BE FOUND DURING EXCAVATIONS, PROMPTLY NOTIFY OWNER'S REPRESENTATIVE. FAILURE TO DO SO WILL MAKE CONTRACTOR LIABLE FOR DAMAGE ARISING FROM HIS OPERATIONS SUBSEQUENT TO DISCOVERY OF UTILITIES NOT SHOWN ON PLANS.
2. KEEP PLANTING CLEAN AND FREE FROM ALL CONCRETE, ASPHALTIC WASTE, LUMBER AND OTHER SUCH MATERIALS AND SHOULD BE REMOVED BY EXCAVATION OF THE SOIL AND REPLACED WITH CLEAN NATIVE TOP SOIL.
3. CLEAR AND GRUB ALL AREAS TO RECEIVE NEW PLANTING AND PREPARE SOIL PER SPECIFICATION.
4. DO NOT WORK SOIL WHEN WET TO AVOID COMPACTION.
5. NO PLANT SPECIES SUBSTITUTIONS WILL BE ACCEPTED, UNLESS OTHERWISE APPROVED BY THE LANDSCAPE ARCHITECT. SAME GENUS DIFFERENT SPECIES SUBSTITUTIONS ARE ACCEPTABLE PROVIDED THE VARIETY IS SIMILAR IN GROWTH HABIT AND SIZE TO THE SPECIFIED PLANT AND WATER USE IS THE SAME. EXAMPLE: ESCALLONIA 'TERRI' COULD SUB FOR 'RED ELF.' RHAPHIOLEPSIS CAN NOT SUBSTITUTE FOR ESCALLONIA AS THEY HAVE DIFFERENT WATER USE REQUIREMENTS. CERTIFICATES OF COMPLIANCE WILL NOT BE COMPLETED FOR PROJECTS WHICH EXCEED THE WATER USE OF SPECIFIED PLANT MATERIALS UNTIL CONFORMANCE WITH THE WATER EFFICIENT LANDSCAPE REQUIREMENTS IS ACHIEVED.
6. CONTRACT GROW PLANTS AS REQUIRED. CONTRACT GROWN PLANTS MUST MEET INDUSTRY STANDARDS FOR SIZE IN ORDER TO BE ACCEPTED.
7. ALL PLANTS AND LAYOUT TO BE APPROVED BY THE OWNER'S REPRESENTATIVE PRIOR TO EXCAVATION OF PLANTING HOLES.
8. NOTIFY OWNER'S REPRESENTATIVE 36 HOURS PRIOR TO COMMENCEMENT OF WORK TO COORDINATE PROJECT OBSERVATION MEETINGS.
9. SPACE GROUND COVERS TRIANGULARLY IN PLANTING AREAS. GROUND COVER KEY INDICATIONS ARE SHOWN IN LEGEND. HOLD GROUND COVER BACK IN 18 IN. FROM THE EDGE OF NEW SHRUB PLANTS UNLESS OTHERWISE. PLANT GROUND COVER WHERE SHRUBS ARE PLANTED 2 1/2 FT. APART OR MORE.
10. PROTECT EXISTING TREES TO REMAIN PER TREE PRESERVATION AND REMOVAL PLAN.
11. PLANT QUANTITIES ARE FOR INFORMATIONAL PURPOSES AND CONSTRUCTION DOCUMENT WATER USE CALCULATIONS ONLY, CONTRACTER TO VERIFY THE QUANTITY AND USE THE GRAPHIC PLANS AS A BASIS FOR QUANTITY OF PLANTS.
12. SEE DETAILS AND SPECIFICATIONS FOR PROCEDURES, MATERIALS AND INSTALLATION REQUIREMENTS.
13. PROVIDE SOILS REPORTS FOR ALL IMPORTED SOILS, PER SPECIFICATIONS AND WELO CONFORMANCE. SUBMIT REPORTS TO OWNER'S REPRESENTATIVE AND LANDSCAPE ARCHITECT FOR REVIEW AND APPROVAL.
14. KEEP ADJACENT STREETS, SIDEWALKS AND OTHER AREAS FREE OF MUD, DIRT OR SIMILAR NUISANCES RESULTING FROM EARTHWORK OPERATIONS.
15. REPLACE TO THE SATISFACTION OF THE OWNER'S REPRESENTATIVE ANY DAMAGED OR DESTROYED LANDSCAPING.
16. FOR BEST RESULTS, NATIVE PLANT MATERIALS SHOULD NOT HAVE THEIR ROOTS DISTURBED. FOR PLASTIC CANS, REMOVE BOTTOM OF CAN, PLACE IN PLANT PIT AND CUT SIDES TO REMOVE. CUT METAL CANS IN THREE PLACES MINIMUM AND CAREFULLY SLIDE ROOT BALL INTO PLANT PIT, FOR LARGE MATERIAL, USE BOTTOM SUPPORT AS NECESSARY.
17. AREAS IDENTIFIED AS BIORETENTION PLANTING ARE FUNCTIONAL STORM WATER PLANTERS WITH AN ENGINEERED IMPORTED SOIL MIX DESIGNED FOR SPECIFIC PERFORMANCE CRITERIA. AMEND ONLY PLANTING PITS AND ASSOCIATED PLANTING BACKFILL PER THE PLANTING INSTRUCTIONS. SEE CIVIL DRAWINGS FOR BIOFILTRATION MIX AND DRAINAGE.

STATEMENT OF COMPLIANCE TO MWELO FOR DESIGN PLANS

I HAVE COMPLIED WITH THE CRITERIA OF ARTICLE 19 OF THE ZONING CODE, INCLUDING ALL DESIGN STANDARDS OF SECTION 4-1908, AND APPLIED THEM FOR THE EFFICIENT USE OF WATER IN THE LANDSCAPE DESIGN PLAN.

LANDSCAPE ARCHITECTURE SIGNATURE

IRRIGATION DESIGN INTENT

IRRIGATION SYSTEM IS DESIGNED TO PROVIDE THE MINIMUM AMOUNT OF WATER NECESSARY TO SUSTAIN GOOD PLANT HEALTH. ALL SELECTED COMPONENTS ARE COMMERCIAL GRADE, SELECTED FOR DURABILITY, VANDAL RESISTANCE AND MINIMUM MAINTENANCE REQUIREMENT.

- COMPLIANT WITH CALIFORNIA MODEL WATER EFFICIENT LANDSCAPE ORDINANCE (MWELO)
- COMPLIANT WITH LOCAL WATER EFFICIENT LANDSCAPE REQUIREMENTS.
- COMPLIANT WITH REQUIREMENTS OF APPLICABLE WATER PROVIDER.

FOR PROJECTS OF 500 SF UP TO 5,000 SF OF IRRIGATED LANDSCAPE, A PRIVATE SUB-METER WILL BE SPECIFIED. FOR PROJECTS LARGER THAN 5,000 SF, A DEDICATED IRRIGATION WATER METER FROM THE APPLICABLE LOCAL WATER PURVEYOR WILL BE REQUIRED.

THE SYSTEM ALSO INCLUDES THE FOLLOWING:

1. HIGH EFFICIENCY DRIP SYSTEMS FOR ALL SHRUB/GROUNDCOVER AREAS; HIGH EFFICIENCY SPRINKLERS OR DRIP FOR LAWNS.
2. SYSTEM MANAGEMENT BY 'SMART' CONTROLLER CAPABLE OF DAILY SELF ADJUSTMENT OF WATERING SCHEDULES BASED ON REAL-TIME DATA FROM ON-SITE SOIL OR WAETHER SENSOR OR CLOUD-BASED WEATHER SERVICE.
3. ALL MATERIALS TO BE COMMERCIAL GRADE WITH PROVEN FIELD SUCCESS AND MINIMAL MAINTENANCE REQUIREMENT.
4. THE SYSTEM INCLUDES A MASTER CONTROL VALVE AND FLOW SENSING CAPABILITY WHICH WILL SHUT DOWN ALL OR PART OF THE SYSTEM IF LEAKS ARE DETECTED.
5. IF RECYCLED WATER IS USED, DESIGN AND ALL EQUIPMENT TO COMPLY WITH INDUSTRY STANDARDS AND APPLICABLE LOCAL STANDARDS FOR ITS USE.

MWELO CONFORMANCE

THE PROJECT PLANTING AND IRRIGATION DESIGN WILL BE DESIGNED WITH LOW WATER USE PLANTS AND EFFICIENT IRRIGATION SYSTEM WHICH WILL MEET THE STATE'S MODEL WATER EFFICIENT LANDSCAPE ORDINANCE. COMPLETED CALCULATIONS AND WORKSHEETS WILL BE PROVIDED DURING BUILDING PERMIT PHASE.

PLANTS SELECTED WILL BE LOW WATER USE AND IRRIGATION WILL CONSIST OF SUBSURFACE DRIP WITH A SMART IRRIGATION CONTROLLER.

PYATOK
1611 TELEGRAPH AVE.
SUITE 200
OAKLAND, CA 94612
T. 510.465.7010 | F. 510.465.8575
www.pyatok.com

THE UNITY COUNCIL

2700 INTERNATIONAL
OAKLAND, CA 94601

STAMP:
LICENSED LANDSCAPE ARCHITECT
CHRISTOPHER M. KENT
MAY 31, 2024
Renewal Date
DECEMBER 02, 2022
1998
STATE OF CALIFORNIA

ISSUE SCHEDULE

100 SD	5/11/22
50 DD	7/15/22
100 DD	9/16/22
50 CD	11/18/22
BUILDING PERMIT SET	12/09/22

REVISION SCHEDULE
NO. | ISSUE | DATE

JOB NUMBER:	0001
DRAWN BY:	EM
CHECKED BY:	CK
ISSUE DATE:	12/09/22
SCALE:	1" = 10'-0"

TITLE:
PLANTING NOTES, LEGEND & SCHEDULE

SHEET:
L4.00

PRELIMINARY - Not for Construction -

© 2019 PYATOK ARCHITECTURE & URBAN DESIGN

12/7/2022 10:36:44 AM

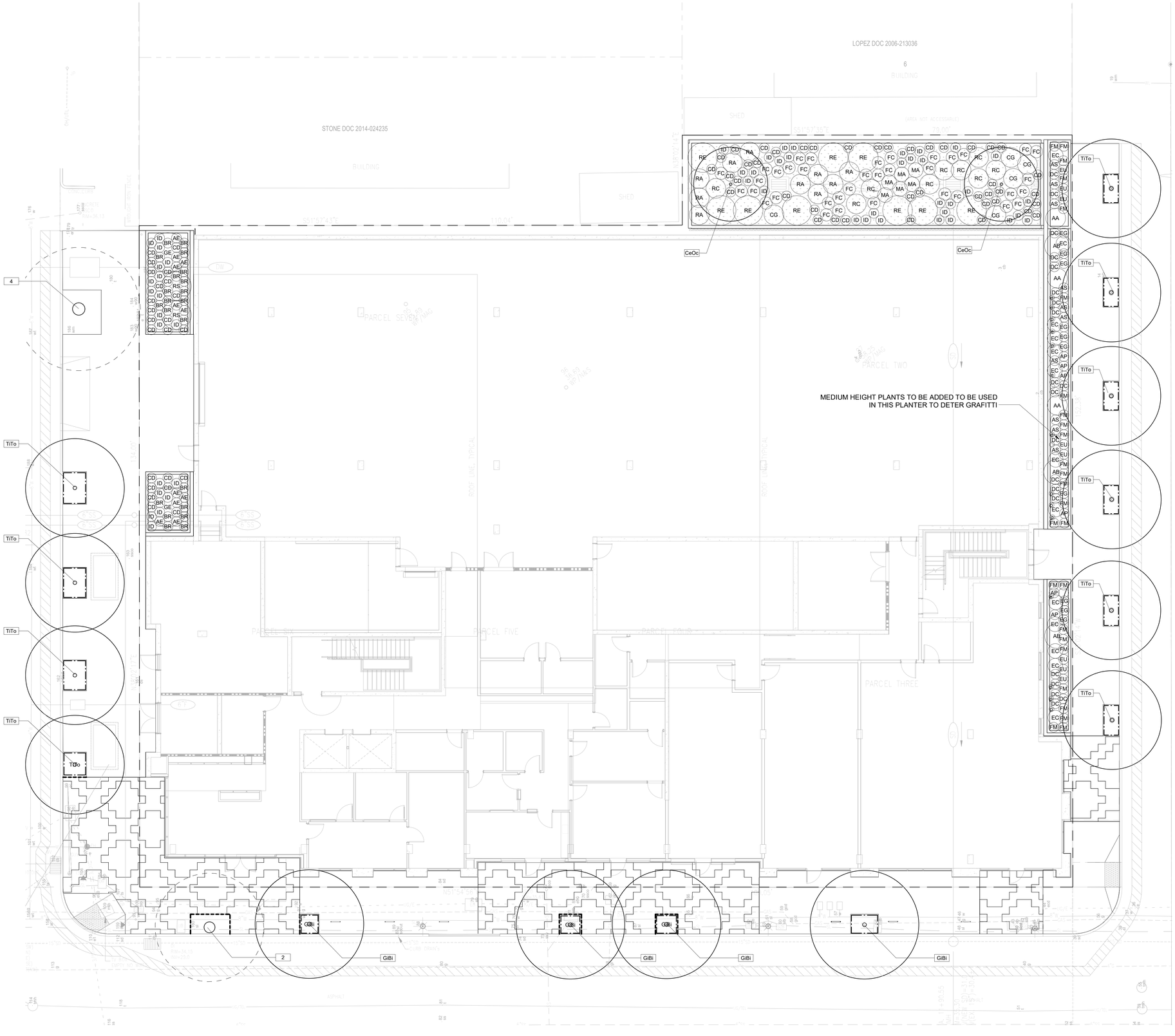

PLANT LEGEND

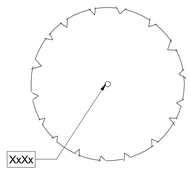

PROPOSED TREE AND SPECIES ABBREVIATION, SEE PLANT LIST FOR SPECIES

SHRUB OR GROUNDCOVER, SEE PLANT LIST FOR SPECIES

ROOT BARRIER

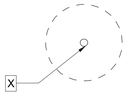

EXISTING TREE TO REMAIN, SEE TREE PRESERVATION PLAN

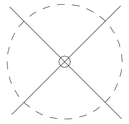

EXISTING TREE TO BE REMOVED, SEE TREE PRESERVATION PLAN OR DEMOLITION PLAN

SHRUB AND GROUNDCOVER PLANTING AREA, SEE PLANT LIST FOR SPECIES

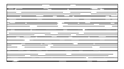

BIOFILTRATION PLANTING AREA, SEE PLANT LIST FOR SPECIES, SEE CIVIL PLAN FOR DESIGN

PYATOK
1611 TELEGRAPH AVE.
SUITE 200
OAKLAND, CA 94612
T. 510.465.7010 | F. 510.465.8575
www.pyatok.com

THE UNITY COUNCIL

2700 INTERNATIONAL

OAKLAND, CA 94601

STAMP:

ISSUE SCHEDULE

100 SD	5/11/22
50 DD	7/15/22
100 DD	9/16/22
50 CD	11/18/22
BUILDING PERMIT SET	12/09/22

REVISION SCHEDULE

NO.	ISSUE	DATE

JOB NUMBER:	0001
DRAWN BY:	Author
CHECKED BY:	Checker
ISSUE DATE:	12/09/22
SCALE:	1/8" = 1'-0"

TITLE:

PLANTING PLAN- LEVEL 1

SHEET:

L4.01

PRELIMINARY - Not for Construction -

© 2019 PYATOK ARCHITECTURE & URBAN DESIGN

0 4 8 12 16ft

12/7/2022 10:36:46 AM

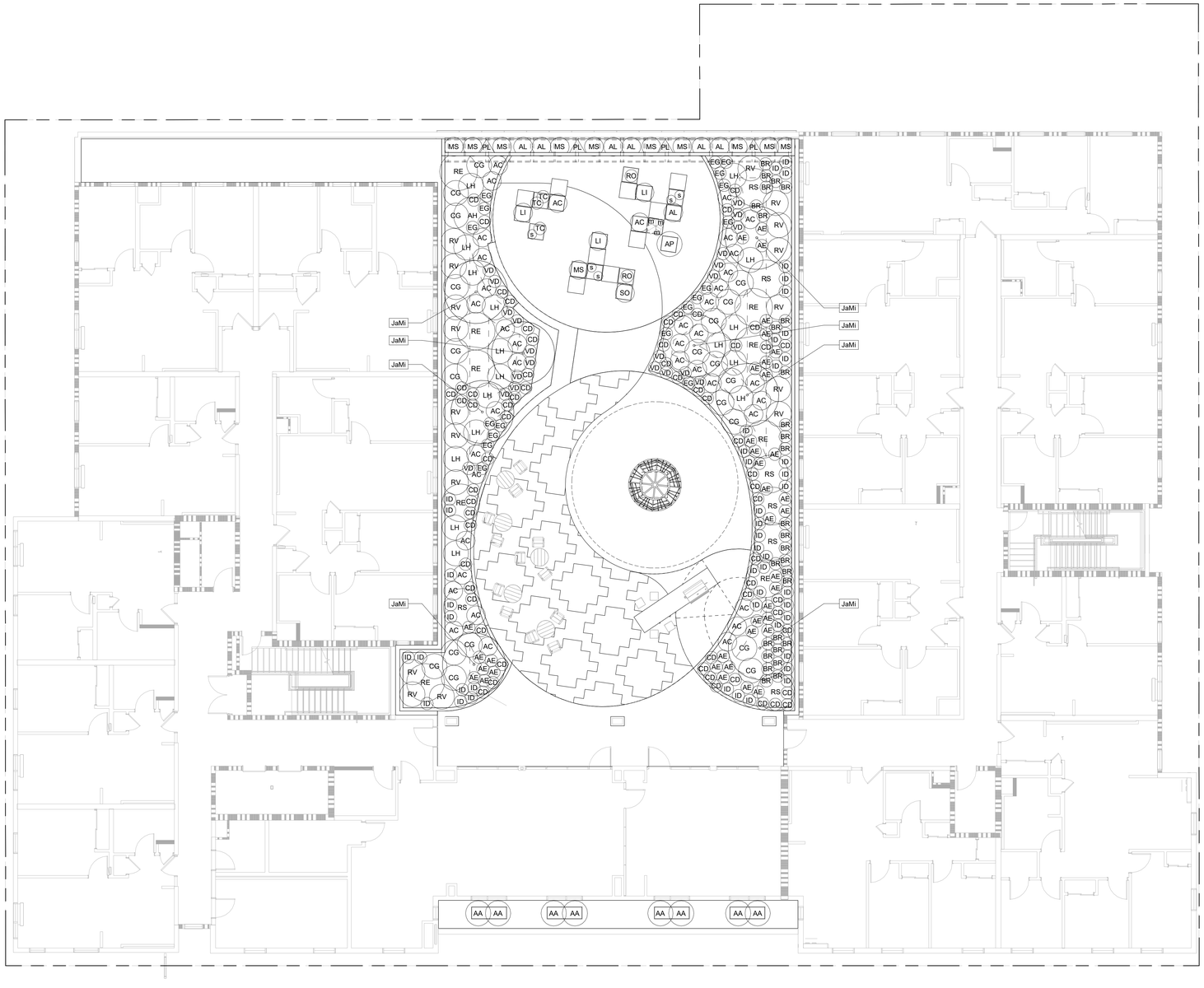

PLANT LEGEND

PROPOSED TREE AND SPECIES ABBREVIATION, SEE PLANT LIST FOR SPECIES

SHRUB OR GROUNDCOVER, SEE PLANT LIST FOR SPECIES

ROOT BARRIER

EXISTING TREE TO REMAIN, SEE TREE PRESERVATION PLAN

EXISTING TREE TO BE REMOVED, SEE TREE PRESERVATION PLAN OR DEMOLITION PLAN

SHRUB AND GROUNDCOVER PLANTING AREA, SEE PLANT LIST FOR SPECIES

BIOFILTRATION PLANTING AREA, SEE PLANT LIST FOR SPECIES, SEE CIVIL PLAN FOR DESIGN

0 4 8 12 16ft

PYATOK
1611 TELEGRAPH AVE.
SUITE 200
OAKLAND, CA 94612
T. 510.465.7010 | F. 510.465.8575
www.pyatok.com

THE UNITY COUNCIL

2700 INTERNATIONAL

OAKLAND, CA 94601

STAMP:

LICENSED LANDSCAPE ARCHITECT
CHRISTOPHER W. KENT & ASSOCIATES
MAY 31, 2024
Renewal Date
DECEMBER 02, 2022
Date
STATE OF CALIFORNIA

ISSUE SCHEDULE

100 SD	5/11/22
50 DD	7/15/22
100 DD	9/16/22
50 CD	11/18/22
BUILDING PERMIT SET	12/09/22

REVISION SCHEDULE

NO.	ISSUE	DATE

JOB NUMBER:	0001
DRAWN BY:	Author
CHECKED BY:	Checker
ISSUE DATE:	12/09/22
SCALE:	1/8" = 1'-0"

TITLE:

PLANTING PLAN- LEVEL 2

SHEET:

L4.02

PRELIMINARY - Not for Construction -

© 2019 PYATOK ARCHITECTURE & URBAN DESIGN

12/7/2022 10:36:47 AM

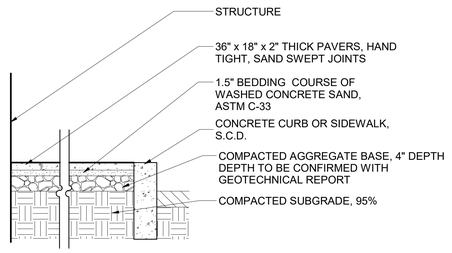

NOTES:
1. WHERE A PAVER LESS THAN 30% OF A FULLSIZE PAVER WOULD BE REQUIRED TO END A LINE OF PAVERS IN THE RUNNING BOND, PUT THE END TWO PAVERS IN THE LINE WITH NEITHER BRICK BEING LESS THAN 30%. END WITH A FULL SIZE UNCUT PAVER AT PLANTER WALLS WHERE POSSIBLE.
2. DEPTH AND SUB DRAINAGE PER GEOTECHNICAL REPORT, WHICHEVER IS MORE STRINGENT
3. PAVER MANUFACTURER: STEPSTONE, WWW.STEPSTONEINC.COM, TEL: 1-800-527-9029
4. MODEL: CALARC PAVER
5. SIZE: 18"X36"X2"
6. TYPE E: PEBBLE W/ SLAG 1424 LIGHT SANDBLAST, 18"X36"X2"
7. TYPE F: ADOBE W/ SLAG 1425 MEDIUM SANDBLAST, 18"X36"X2"

1 L5.01 PAVING UNIT PAVERS
3/4" = 1'-0"

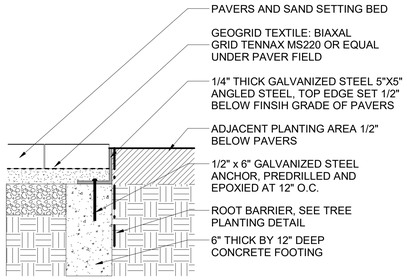

2 L5.01 METAL EDGE AT UNIT PAVERS
1 1/2" = 1'-0"

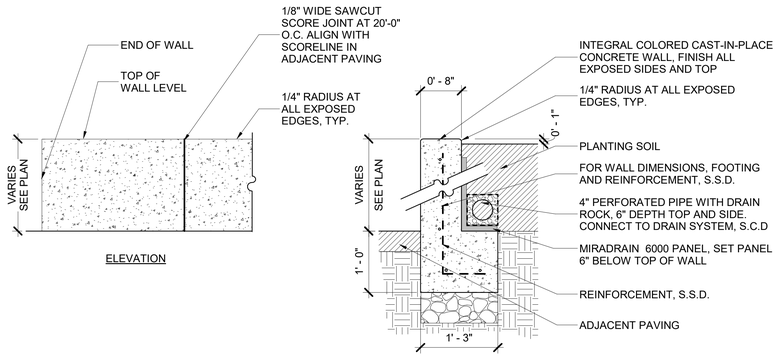

NOTES:
1. EXTEND FINISH TO 3" BELOW FINISH GRADE AT PLANTING AREAS.
2. PROVIDE EXPANSION JOINT AT BASE OF WALL WHERE THERE IS CONCRETE PAVING ADJACENT.
3. WALLS ARE INTEGRAL COLORED CONCRETE WITH SMOOTH FINISH
4. COLOR OF WALL: DAVIS COLOR MESQUITE 677
5. PROVIDE MOCKUP OF COLOR AND FINISH FOR FINAL APPROVAL.

3 L5.01 CONCRETE WALL
1" = 1'-0"

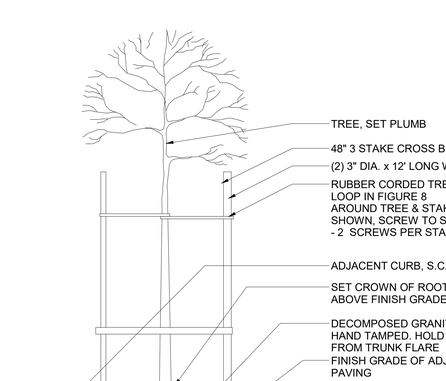

NOTES;
1.MODEL: WELLE CIRCULAR 2" SQUARE TUBE SURFACE FLANGE GALVANIZED WCR02-SQ-SF-G FROM THE PALMER GROUP LLC, WEBSITE: WWW.BIKEPARKING.COM, TEL: 415.333.6428 OR APPROVED ALTERNATIVE

4 L5.01 BIKE RACK
3/4" = 1'-0"

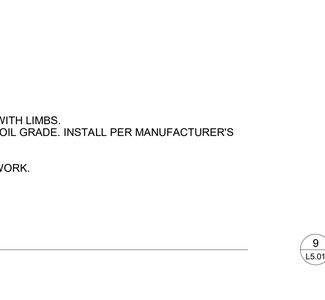

NOTES;
1. SUBMIT SHOP DRAWINGS PRIOR TO FABRICATION
2. PRIME AND PAINT ALL EXPOSED MEMBERS BLACK

5 L5.01 FENCE PANEL
1/2" = 1'-0"

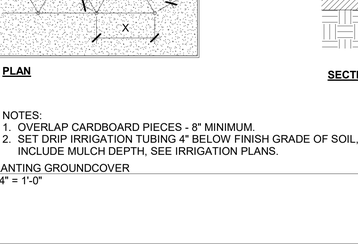

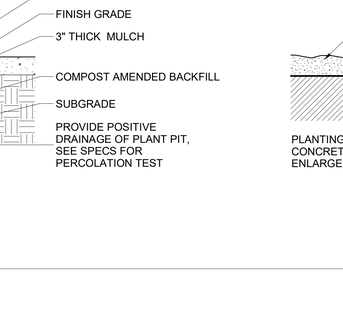

NOTES:
1. DECORATIVE GRAVEL: ¾" DESERT GOLD ANGULAR WASHED GRANITE, AS MANUFACTURED BY LYNGSO GARDEN MATERIALS, WWW.LYNGSOGARDEN.COM

6 L5.01 STONE VOID AT BUILDING WALL
1" = 1'-0"

NOTES:
1. LOCATE TREE STAKES ON PREVAILING WIND SIDE WHEN TREE IS IN LEAF. ADJUST BRACING & TIES TO AVOID CONFLICT WITH LIMBS.
2. ROOT BARRIER: DEEP ROOT CORP, MODEL UB24-2 AND/OR UB36-2 OR EQUAL WITH GROUND LOCKS. INSTALL FLUSH TO SOIL GRADE. INSTALL PER MANUFACTURER'S RECOMMENDATIONS.
3. TOP OF ROOT CONTROL BARRIER MUST BE AT FINISHED GRADE OF SOIL (NEVER BELOW GRADE).
4. DURING CONSTRUCTION THE ROOT CONTROL BARRIER CAN BE PLACED AGAINST THE INSIDE OF THE CONCRETE FORM WORK.
5. THE RAISED ROOT DEFLECTORS MUST BE FACING INWARD TOWARD THE TREE.
6. INSTALL PER MANUFACTURER'S RECOMMENDATIONS AND SPECIFICATIONS.
7. PROVIDE ROOT BARRIER FOR ANY TREE ADJACENT TO CURB, PAVING OR WALLS. ROOT DEFLECTORS MUST FACE TREE.

8 L5.01 PLANTING STREET TREE WITH ROOT BARRIER
1/2" = 1'-0"

NOTES:
1. OVERLAP CARDBOARD PIECES - 8" MINIMUM.
2. SET DRIP IRRIGATION TUBING 4" BELOW FINISH GRADE OF SOIL, NOTE THIS DEPTH DOES NOT INCLUDE MULCH DEPTH, SEE IRRIGATION PLANS.

7 L5.01 PLANTING SHRUB
3/4" = 1'-0"

NOTES:
1. OVERLAP CARDBOARD PIECES - 8" MINIMUM.
2. SET DRIP IRRIGATION TUBING 4" BELOW FINISH GRADE OF SOIL, NOTE THIS DOES NOT INCLUDE MULCH DEPTH, SEE IRRIGATION PLANS.

9 L5.01 PLANTING GROUNDCOVER
3/4" = 1'-0"

12/7/2022 10:36:47 AM

PYATOK
1611 TELEGRAPH AVE.
SUITE 200
OAKLAND, CA 94612
T. 510.465.7010 | F. 510.465.8575
www.pyatok.com

THE UNITY COUNCIL
1900 FRUITVALE AVE
#24
OAKLAND, CA 94601

2700 INTERNATIONAL
OAKLAND, CA 94601

STAMP:
LICENSED LANDSCAPE ARCHITECT
CHRISTOPHER W. KENT # 6064
MAY 31, 2024
Renewal Date
DECEMBER 02, 2022
Date
STATE OF CALIFORNIA

ISSUE SCHEDULE

100 SD	5/11/22
50 DD	7/15/22
100 DD	9/16/22
50 CD	11/18/22
BUILDING PERMIT SET	12/09/22

REVISION SCHEDULE

NO.	ISSUE	DATE

JOB NUMBER:	0001
DRAWN BY:	Author
CHECKED BY:	Checker
ISSUE DATE:	12/09/22
SCALE:	As indicated

TITLE:
LANDSCAPE DETAILS - ON GRADE

SHEET:
L5.01

PRELIMINARY - Not for Construction -

© 2019 PYATOK ARCHITECTURE & URBAN DESIGN

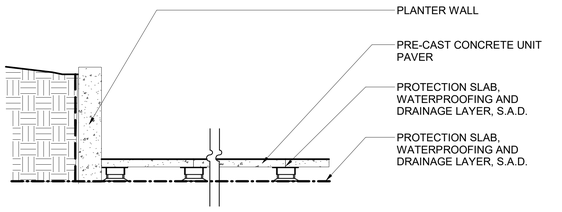

NOTES:
1. PAVER MANUFACTURER: STEPSTONE INC., WWW.STEPSTONEINC.COM, TEL: 1-800-527-9029
2. MODEL: CALARC PAVER
3. TYPE A: PEBBLE W/ SLAG 1424 LIGHT SANDBLAST, 18"X36"X2"
4. TYPE B: ADOBE W/ SLAG 1425 MEDIUM SANDBLAST, 18"X36"X2"
5. TYPE C: PEBBLE W/ SLAG 1424 LIGHT SANDBLAST, 24"X24"X2"
6. ADJUSTABLE PEDESTAL: BISON VERSAJUST
7. USE OVERSIZED PAVERS WITH FALSE JOINTS WHERE REQUIRED AT EDGE OF PAVING

1 L5.02 O.S. CONCRETE PAVERS ON PEDESTAL
3/4" = 1'-0"

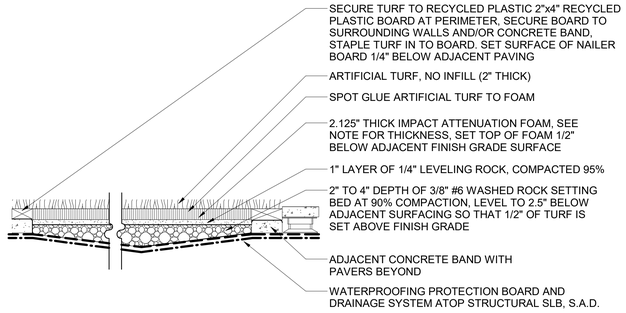

NOTES:
1. ARTIFICIAL TURF: SYNFESCUE 343 SET ATOP POLYGREEN FOAM MAT, AS MANUFACTURED BY: SYNLAWN, REPRESENTATIVE: SYN LAWN BAY AREA, 603 S. 8TH STREET, RICHMOND, CA 94804, TELEPHONE: 510-215-2000, WEB SITE: HTTP://WWW.SYNLAWN.COM
2. VERIFY SET DOWN OF TURF TO ADJACENT SURFACING PRIOR TO INSTALLATION.
3. TURF THICKNESS IS ESTIMATED TO BE 1.5" THICK.
4. IMPACT ATTENUATION FOAM MAT IS THE POLYGREEN FOAM MAT AND THICKNESS IS ESTIMATED TO BE 2.125" THICK. CONFIRM FALL HEIGHT OF PLAY EQUIPMENT AND THAT MAT THICKNESS WILL MEET THE ASTM IMPACT ATTENUATION REQUIREMENTS FOR THE PLAY EQUIPMENT TO BE INSTALLED. AGE 5 TO 12 MAXIMUM DESIGNATED PLAY SURFACE IS 96" (8')

2 L5.02 O.S. SYNTHETIC PLAY AREA TURF
1" = 1'-0"

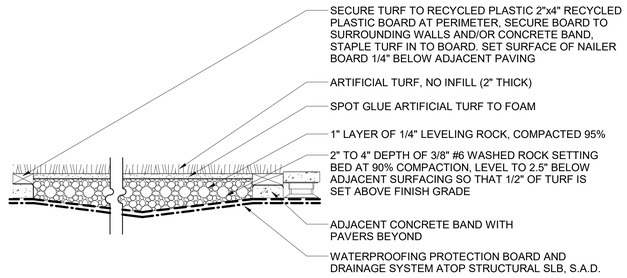

NOTES:
1. ARTIFICIAL TURF: SYNFESCUE 343 SET ATOP POLYGREEN FOAM MAT, AS MANUFACTURED BY: SYNLAWN, REPRESENTATIVE: SYN LAWN BAY AREA, 603 S. 8TH STREET, RICHMOND, CA 94804, TELEPHONE: 510-215-2000, WEB SITE: HTTP://WWW.SYNLAWN.COM
2. VERIFY SET DOWN OF TURF TO ADJACENT SURFACING PRIOR TO INSTALLATION.
3. TURF THICKNESS IS ESTIMATED TO BE 1.5" THICK.

3 L5.02 O.S. SYNTHETIC TURF
1" = 1'-0"

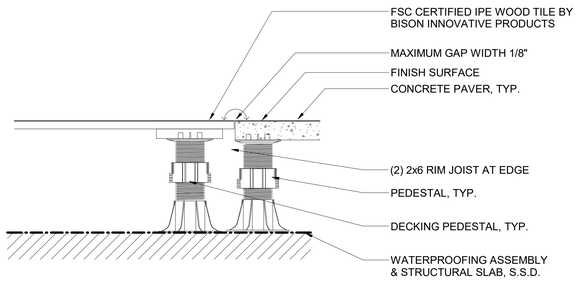

NOTES:
1. INSTALLATION IN ACCORDANCE WITH MANUFACTURER'S SPECIFICATIONS.
2. MANUFACTURER TO PROVIDE STRUCTURAL SIGN-OFF ON PEDESTAL PAVER SYSTEM.
3. PAVER SYSTEM PROVIDES DRAINAGE BETWEEN PAVERS & DECK BOARDS.

4 L5.02 O.S. DECKING
1 1/2" = 1'-0"

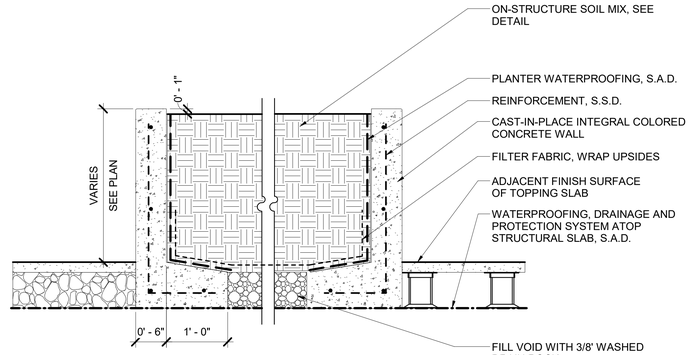

NOTES:
1. 1/4" RADIUS AT VERTICAL AND HORIZONTAL EDGES, TYP. S.S.D. FOR REINFORCEMENT.
2. KEEP REBAR 3" CLEAR FROM EDGE OF CONCRETE WORK.
3. PLANTER WALL, 1/4" RADIUS AT VERTICAL AND HORIZONTAL EDGES, TYP
4. WALLS ARE INTEGRAL COLORED CONCRETE WITH SMOOTH FINISH
5. COLOR OF WALL: DAVIS COLOR MESQUITE 677
6. PROVIDE MOCKUP OF COLOR AND FINISH FOR FINAL APPROVAL.

5 L5.02 O.S. PLANTER WALL CAST-IN-PLACE CONCRETE
1" = 1'-0"

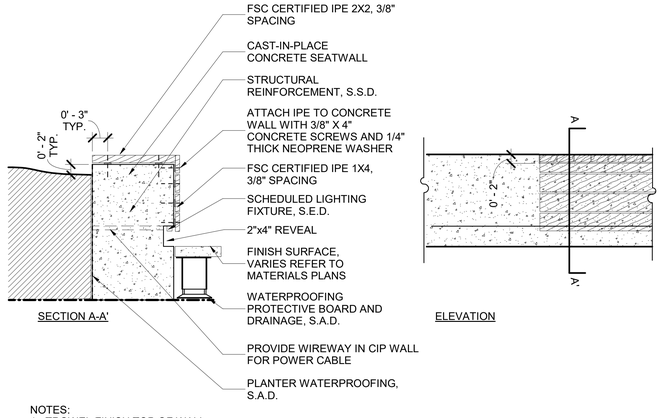

NOTES:
1. TROWEL FINISH TOP OF WALL
2. SLOPE TOP OF CONCRET SEAT WALL 2% TOWARD PLANTER FOR DRAINAGE
3. WALLS ARE INTEGRAL COLORED CONCRETE WITH SMOOTH FINISH
4. COLOR OF WALL: DAVIS COLOR MESQUITE 677
5. PROVIDE MOCKUP OF COLOR AND FINISH FOR FINAL APPROVAL.

6 L5.02 O.S. SEATWALL
1" = 1'-0"

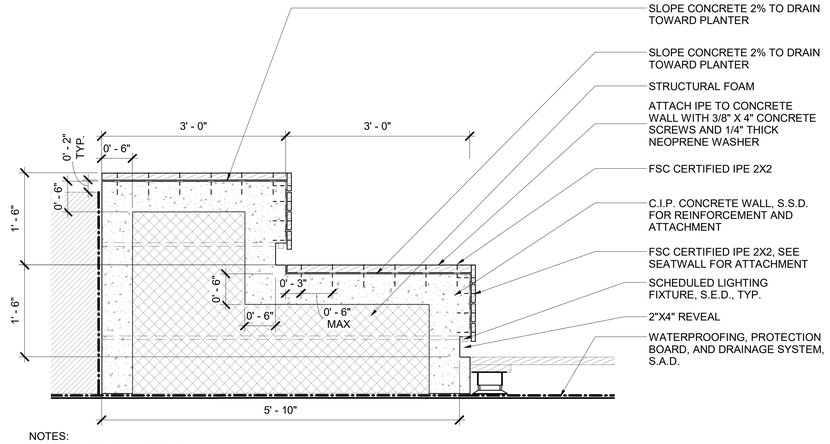

NOTES:
1. 1. TROWEL FINISH TOP OF WALL
2. SLOPE TOP OF CONCRET SEAT WALL 2% TOWARD FRONT FOR DRAINAGE
3. WALLS ARE INTEGRAL COLORED CONCRETE WITH SMOOTH FINISH
4. COLOR OF WALL: DAVIS COLOR MESQUITE 677
5. PROVIDE MOCKUP OF COLOR AND FINISH FOR FINAL APPROVAL.

7 L5.02 O.S. TERRACED SEATING
1" = 1'-0"

12/7/2022 10:36:48 AM

PYATOK
1611 TELEGRAPH AVE.
SUITE 200
OAKLAND, CA 94612
T. 510.465.7010 | F. 510.465.8575
www.pyatok.com

THE UNITY COUNCIL

2700 INTERNATIONAL
OAKLAND, CA 94601

STAMP:
LICENSED LANDSCAPE ARCHITECT
CHRISTOPHER W. KERN
Signature
MAY 31, 2024
Date
Personal Use
DECEMBER 02, 2022
Date
1594
STATE OF CALIFORNIA

ISSUE SCHEDULE

100 SD	5/11/22
50 DD	7/15/22
100 DD	9/16/22
50 CD	11/18/22
BUILDING PERMIT SET	12/09/22

REVISION SCHEDULE

NO.	ISSUE	DATE

JOB NUMBER:	0001
DRAWN BY:	Author
CHECKED BY:	Checker
ISSUE DATE:	12/09/22
SCALE:	As indicated

TITLE:

LANDSCAPE DETAILS - ON STRUCTURE - SHEET 1

SHEET:

L5.02

PRELIMINARY - Not for Construction -

© 2019 PYATOK ARCHITECTURE & URBAN DESIGN

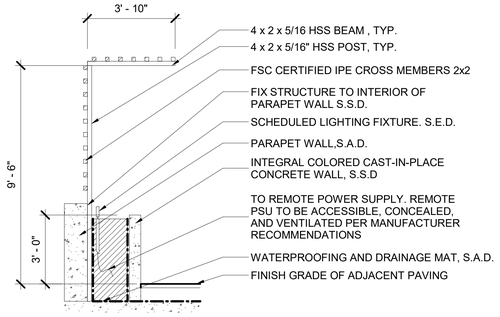

SECTION

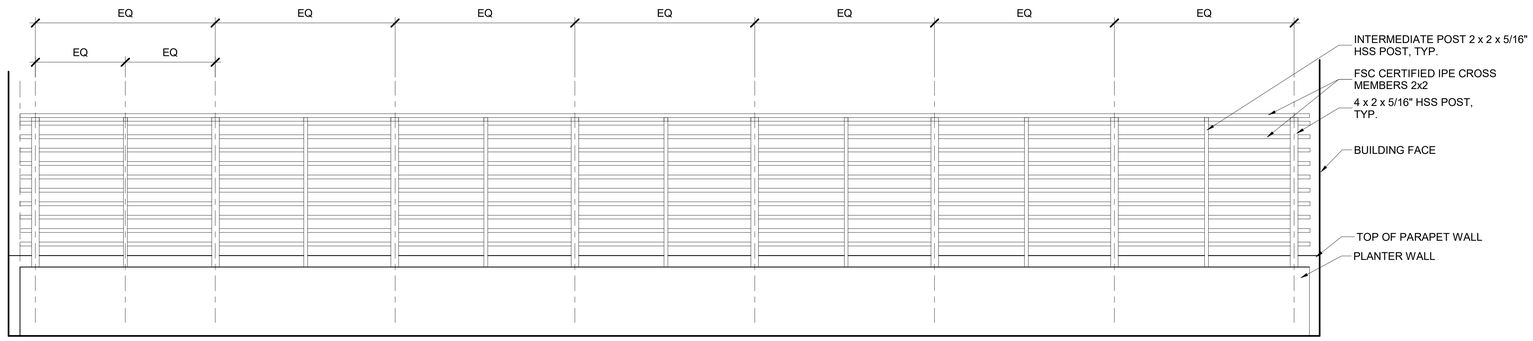

ELEVATION

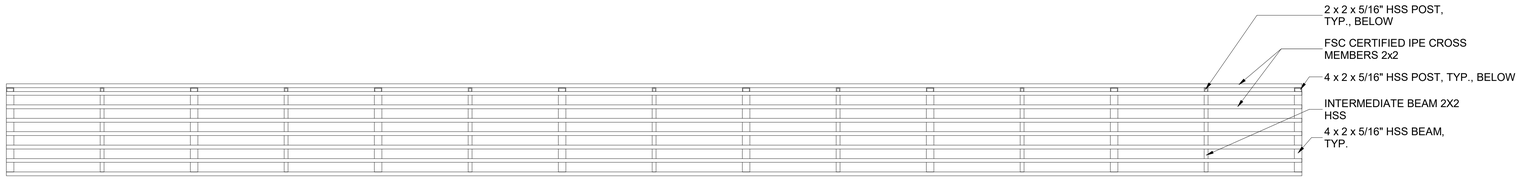

PLAN

1 / L5.03 O.S. TRELLIS
3/8" = 1'-0"

2 / L5.03 PLANTER AND BENCH ENLARGEMENT
3/8" = 1'-0"

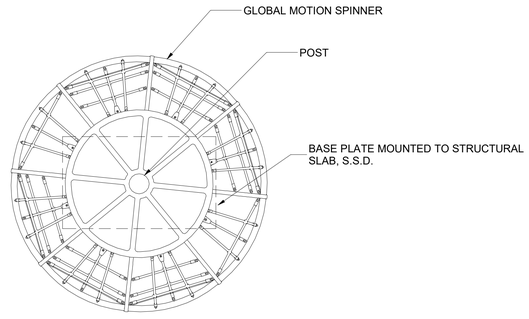

NOTES:
1. MODEL #218915 GLOBAL MOTION SPINNER
2. MANUFACTURER: LANDSCAPE STRUCTURES, 1-707-538-3800, WWW.PLAYLSI.COM
3. FOR AGES 5-12
4. HIGHEST DESIGNATED PLAY SURFACE: 105"
5. WEIGHT OF EQUIPMENT PER MANUFACTURER: 1,555 LBS
6. COLORS:
   - POSTS & COMPONENTS: DENIM
   - CLAMPS: SKY
   - POLY/PERMALENE: LIMON
   - POST CAP COLOR (POLYETHYLENE): LIMON
   - STEEL CABLE COLOR: BLACK
7. VERIFY SAFETY ZONE PRIOR TO INSTALLATION OF FOOTINGS AND STRUCTURE.

ADA ANALYSIS	ELEVATED ACTIVITIES	GROUND LEVEL ACTIVITIES	GROUND LEVEL PLAY TYPES
PRESENT	0	1	1
ACCESSIBLE	0	1	1
REQUIRED	0	0	1

3 / L5.03 PLAY EQUIPMENT
1/2" = 1'-0"

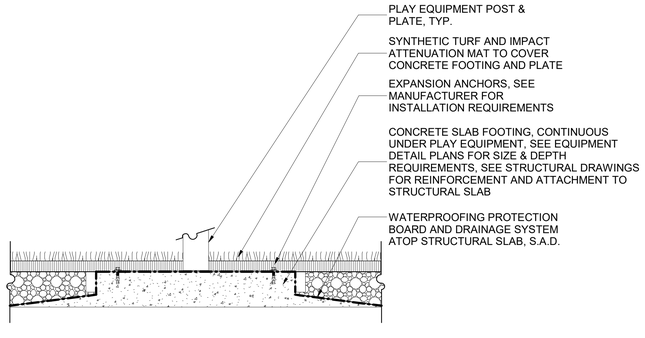

NOTES:
1. ALL PLAY EQUIPMENT FOOTINGS TO BE SURFACE MOUNTED.
2. PROVIDE SIGNED STRUCTURAL DRAWINGS DETAILING FOOTING INSTALLATION FOR ALL PLAY EQUIPMENT BY MANUFACTURER.

4 / L5.03 O.S. PLAY EQUIPMENT FOOTING, TYP.
1" = 1'-0"

12/7/2022 10:36:49 AM

PYATOK
1611 TELEGRAPH AVE.
SUITE 200
OAKLAND, CA 94612
T. 510.465.7010 | F. 510.465.8575
www.pyatok.com

THE UNITY COUNCIL

2700 INTERNATIONAL
OAKLAND, CA 94601

STAMP:
LICENSED LANDSCAPE ARCHITECT
CHRISTOPHER W. KERN, # 6064
MAY 31, 2024
Renewal Date
DECEMBER 02, 2022
Date
STATE OF CALIFORNIA

ISSUE SCHEDULE

100 SD	5/11/22
50 DD	7/15/22
100 DD	9/16/22
50 CD	11/18/22
BUILDING PERMIT SET	12/09/22

REVISION SCHEDULE

NO.	ISSUE	DATE

JOB NUMBER:	0001
DRAWN BY:	Author
CHECKED BY:	Checker
ISSUE DATE:	12/09/22
SCALE:	As indicated

TITLE:
LANDSCAPE DETAILS - ON STRUCTURE - SHEET 2

SHEET:
L5.03

PRELIMINARY - Not for Construction -

© 2019 PYATOK ARCHITECTURE & URBAN DESIGN

CHAIRS:
MANUFACTURER: LANDSCAPE FORMS
MODEL: 21 CHAIR
COLOR: TBD

TABLES:
MANUFACTURER: LANDSCAPE FORMS
MODEL: PARC CENTRE- 30" ROUND
COLOR: TBD

1 L5.04 MOVEABLE TABLES AND CHAIRS
12" = 1'-0"

CHAIRS:
MANUFACTURER: LANDSCAPE FORMS
MODEL: MORRISON STOOL
COLOR: TBD

2 L5.04 MOVABLE STOOLS
12" = 1'-0"

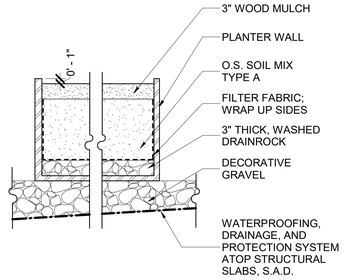

NOTES:
1. SET BOTTOM OF ON DECORATIVE GRAVEL.
2. KEEP TOP OF PLANTER LEVEL.
3. INCLUDE (3) 2" DIAMETER DRAIN HOLES PER PLANT AND (1) 2" HOLE FOR IRRIGATION.
4. WILSHIRE PLANTER: 2' W X 6' L X 18" H, POWDERCOATED STEEL, MANUFACTURED BY: TOURNESOL, TELEPHONE: 800-542-2282, WEB SITE: www.tournesolsiteworks.com..

9 L5.04 O.S. PLANTER ON GRAVEL
1" = 1'-0"

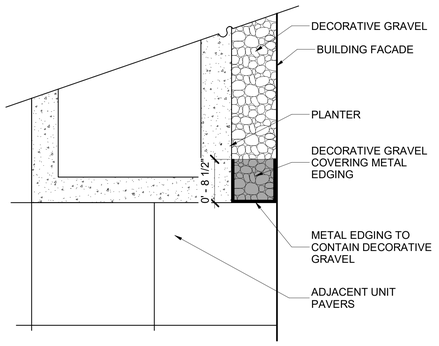

PLAN VIEW AT GRAVEL CONTAINMENT AT WALL

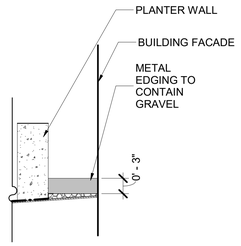

SECTION VIEW AT GRAVEL CONTAINMENT AT WALL

3 L5.04 METAL EDGE AT PRECAST PAVERS AND DECORATIVE GRAVEL
1" = 1'-0"

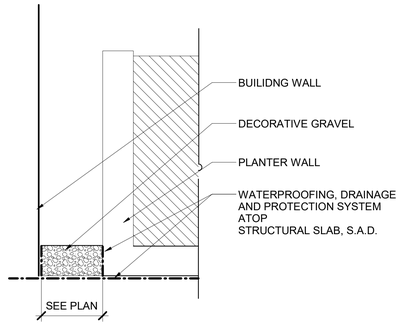

NOTES:
1. DECORATIVE GRAVEL: ¾" DESERT GOLD ANGULAR WASHED GRANITE, AS MANUFACTURED BY LYNGSO GARDEN MATERIALS, WWW.LYNGSOGARDEN.COM
2. SEE PAVER DETAIL FOR METAL EDGE AT AGGREGATE.

4 L5.04 O.S. STONE VOID AT BUILDING WALL
1" = 1'-0"

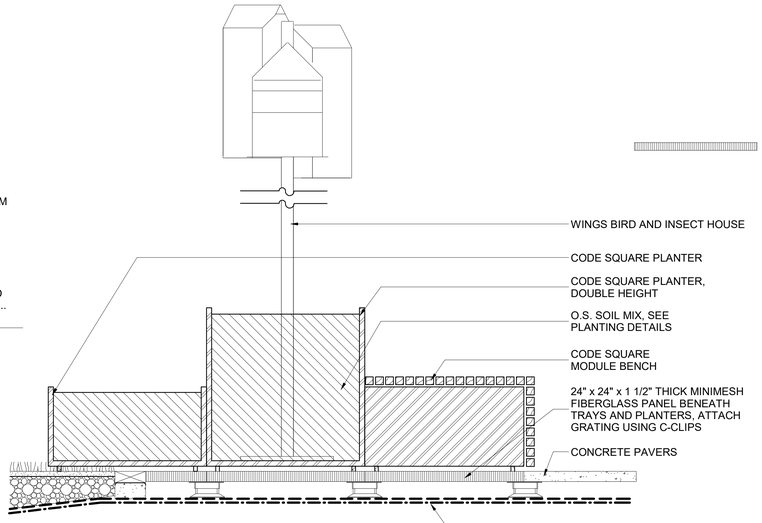

SECTION

NOTES:
1. PLACE PLANTERS AND BENCHES DIRECTLY ON FINISH SURFACE OF PAVERS AND ARTIFICIAL TURF
2. CONNECT ALL ADJACENT PLANTERS HARDWARE PER MANUFACTURER'S RECOMMENDATIONS
3. MANUFACTURER: VESTRE WEBSITE: WWW.VESTRE.COM, REPRESENTATIVE: CHIP BEYT TELEPHONE: (323) 975-2751, EMAIL, CHIP@VESTRE.COM
4. CODE SQUARE PLANTER - #2640, 250 LITRE
5. CODE SQUARE PLANTER, DOUBLE HEIGHT - #2640, 500 LITRE
6. CODE SQUARE MODULE BENCH - #2616
7. WINGS BIRD AND INSECT HOUSE - 5828A 3M MOUNTING POLE, ANCHORING WITH BASE PLATE, MOUNTED TO BOTTOM OF PLANTER
8. PROVIDE HOLES IN BOTTOM OF PLANTER AT 24" O.C. BOTH WAYS FOR DRIANAGE.
9. INSTALL PER MANUFACTURER'S INSTALLATION REQUIREMENTS.
10. PLANTER DRAIN MAT: J DRAIN GRS, MODEL JDR-GRSCS-0316, AVAILABLE FROM JDR ENTERPRISES, INC., (800) 843-7569, WWW.J-DRAIN.COM
11. MINIMESH FIBERGLASS PANEL AS MANUFACTURERED BY: NATIONAL GRATING, TELEPHONE: .844.599.0260, WEB SITE: http://nationalgrating.com/.
12. COAT INSIDE OF PLANTER WITH WATERPROOFING COATING PER MANUFACTURER'S RECOMMENDATIONS
13. PROVIDE FIELD CONFIRMED SHOP DRAWINGS SHOWING LAYOUT WITH CONTEXT OF SURROUNDING ELEMENTS, CONFIRMING PLANTERS WILL FIT INTO PROPOSED LOCATIONS.

5 L5.04 O.S. PREFAB PLANTER AND BENCH
1" = 1'-0"

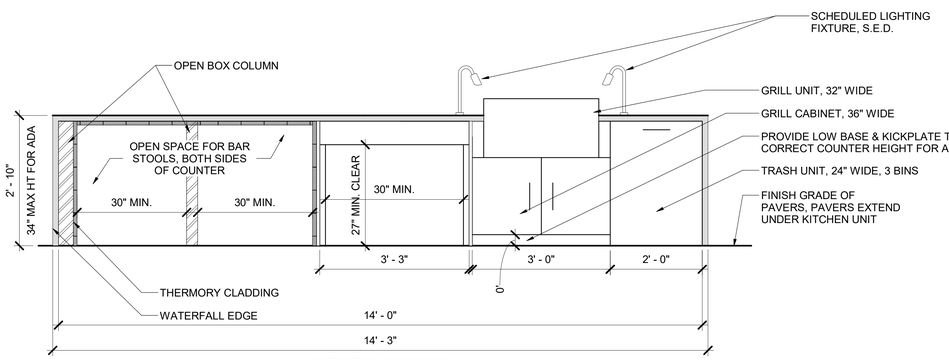

ELEVATION - BUILDING B

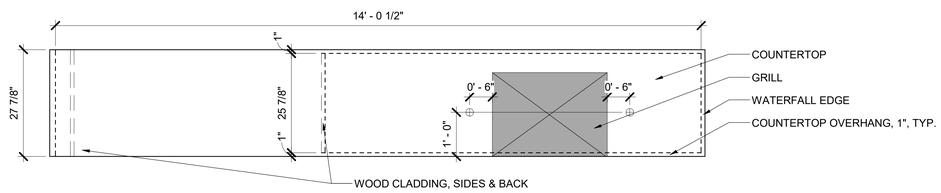

PLAN - BUILDING B

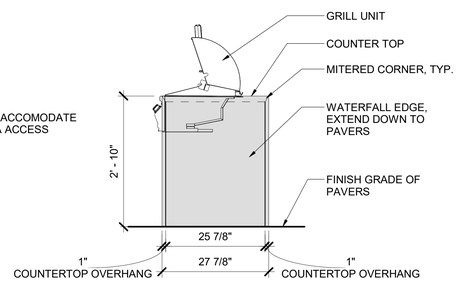

SIDE ELEVATION

NOTES FOR OUTDOOR KITCHEN:

1. INSTALL PER MANUFACTURER'S SPECIFICATIONS AND REQUIREMENTS. PROVIDE SHOP DRAWINGS FOR REVIEW AND APPROVAL.
2. COUNTER TOP: 3cm THICK DEKTON BY COSENTINO, MANUFACTURER: COSENTINO, TELEPHONE: 877-532-6394, WEB SITE: WWW.COSENTINO.COM
3. ELECTRIC GRILL UNIT: RUBY SERIES - 32 INCH, MODEL: 4400-EC-448, MANUFACTURED BY: ELECTRICHEF, TELEPHONE: 800-442-7207, WEB SITE: WWW.ELECTRI-CHEF.COM; BY OWNER.
4. SINK CABINET TO BE ADA COMPLIANT.
5. GRILL UNIT CONTROLS ARE TO BE ON FRONT OF GRILL AND MEET TO MEET ADA REACH CODE; KNOBS CAN BE OPERATED WITHOUT TIGHT GRASPING, PINCHING, OR TWISTING OF THE WRIST WITH A MAXIMUM FORCE OF 5 LBS TO MEET ADA CODE.

KITCHEN BASE UNITS NOTES:

1. ALL CABINETS AND METAL WORK TO BE 316-L WEATHERPROOF STAINLESS STEEL, PAINTED WITH POWDER COAT, COLOR SEASHELL WHITE, 203.269.2300, UNEXPOSED SIDES TO BE STAINLESS STEEL FINISH WITHOUT PAINT.
2. GRILL CABINET: 36" WIDE GRILL BASE CABINET, WITH 2 DOORS FOR 30" WIDE GRILL, MODEL: OGB3602, GAS;
   OPTIONAL: 36" GRILL CABINET WITH SINGLE LOCKING FRONT PANEL THAT INCLUDES 1-HOUR ADA COMPLIANT GAS TIMER AND EMERGENCY SHUTOFF.
3. SINK CABINET FOR ADA COUNTER TOP ACCESS: SINK BASE CABINET WITHOUT DOORS, MODEL OBS3600ADA, MANUFACTURED BY DANVER STAINLESS OUTDOOR KITCHENS, WALLINGFORD, CT, TELEPHONE: 203-269-2300, WEB SITE: WWW.DANVER.COM
4. MANUFACTURED BY DANVER STAINLESS OUTDOOR KITCHENS, WALLINGFORD, CT, TELEPHONE: 203-269-2300, WEB SITE: WWW.DANVER.COM, REP CONTACT: PETER ROSS:

   a. OBS3900 ADA 39"W X 27"D SINK BASE/WORKSTATION, NO DOORS. ADA COMPLIANT.
   b. OBP39 ADA 39" BACK PANEL (FOR OBS3900 ADA)
   c. OGB3602 36"W X 27"D GRILL BASE, 2 DOORS FOR 30" GRILL (SPECIFY);
      OPTIONAL: 36" GRILL CABINET WITH SINGLE LOCKING FRONT PANEL THAT INCLUDES 1-HOUR ADA COMPLIANT GAS TIMER AND EMERGENCY SHUTOFF
   d. OBPV36 36" BACK PANEL WITH VENTS (ORDER 1 FOR A 36" GRILL CABINET)
   e. OGTK PGS 30/36 FACTORY INSTALLED TRIM KIT - 30" PGS S27T LEGACY NEWPORT / 36" CABINET
   f. OBT2400 24"W X 27"D BASE - FULL HEIGHT DOOR, PULL-OUT TRASH ATTACHED TO DOOR (2 TRASH CANS) - UPGRADED WITH 3 COLOR CODED BINS TRASH/RECYCLING/COMPOST
   g. OBP24 24" BACK PANEL (ORDER 1 FOR A 24" CABINET OR 2 FOR A 48" CABINET)
   h. OFEGF27 GALVANIZED FILLER PANEL - FITS INSIDE THE SIDE OF A 27" BASE CABINET
   i. OCS48 48" BRACE KIT TO SUPPORT COUNTERTOP OVER A 48" SPAN. CONSISTS OF 3 ALUMINUM EXTRUSIONS WITH CONSIDERABLE STIFFNESS. **WHILE THE SPAN EXTRUSIONS ARE EXTREMELY STRONG, OUR COMPANY DOES NOT WARRANT THE SPANS TO KEEP COUNTERTOPS FROM CRACKING, ESPECIALLY IF MISTREATED DURING USE. YOUR FABRICATOR/INSTALLER MUST MAKE THE FINAL CALL IF THERE ARE ANY QUESTIONS ON STABILITY ACROSS THE SPAN.
   j. OSP ADA 27.88L ADA LEFT SIDE PANEL - 27-7/8" W X 32"H X 3/4" THICK FOR 27"D ADA SINK BASE WITH NO DOORS
   k. OTK2 BLACK TOE KICK LENGTH WITH 8 SCREWS - 2"H X 84"L (CUT TO LENGTH ON SITE)
   l. OTK2 CORNER 90 2"H BLACK ADA 90 DEGREE TOEKICK CORNER PIECE. CAN BE USED AS AN INSIDE OR OUTSIDE CORNER BY BENDING TOP AND BOTTOM TABS ACCORDINGLY
   m. OTK2 SPLICE 2"H ADA STRAIGHT SPLICE FOR CONTINUOUS RUN OF BLACK TOE KICK

COLORS & CABINET FRONTS FOR OUTDOOR KITCHENS:

LEVEL 3 BUILDING A & B:
COUNTERS:
CABINET FRONTS:
CABINETS METAL COLOR:
DRAWER PULLS:

6 L5.04 O.S. OUTDOOR KITCHEN
3/4" = 1'-0"

12/7/2022 10:36:49 AM

PYATOK
1611 TELEGRAPH AVE.
SUITE 200
OAKLAND, CA 94612
T. 510.465.7010 | F. 510.465.8575
www.pyatok.com

THE UNITY COUNCIL

2700 INTERNATIONAL
OAKLAND, CA 94601

STAMP:
LICENSED LANDSCAPE ARCHITECT
CHRISTOPHER W. KENT, #6064
MAY 31, 2024
Renewal Date
DECEMBER 02, 2022
Date
STATE OF CALIFORNIA

ISSUE SCHEDULE

100 SD	5/11/22
50 DD	7/15/22
100 DD	9/16/22
50 CD	11/18/22
BUILDING PERMIT SET	12/09/22

REVISION SCHEDULE

NO.	ISSUE	DATE

JOB NUMBER:	0001
DRAWN BY:	Author
CHECKED BY:	Checker
ISSUE DATE:	12/09/22
SCALE:	As indicated

TITLE:
LANDSCAPE DETAILS - ON STRUCTURE - SHEET 3

SHEET:
L5.04

PRELIMINARY - Not for Construction -

© 2019 PYATOK ARCHITECTURE & URBAN DESIGN

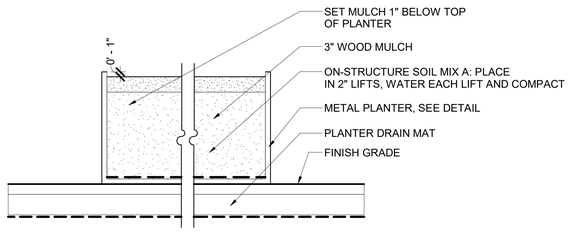

SECTION AT PREFAB PLANTER

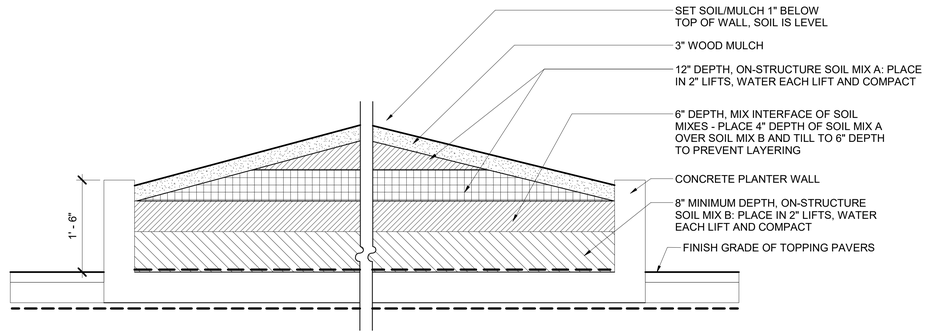

SECTION AT CAST IN PLACE PLANTER

1 L5.05 O.S. PLANTER MIX SOIL INSTALLATION - LEVEL 3
1" = 1'-0"

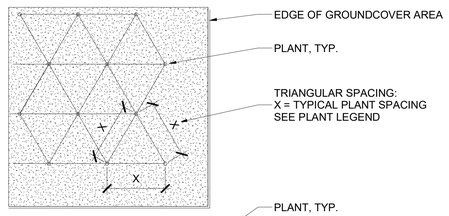

PLAN

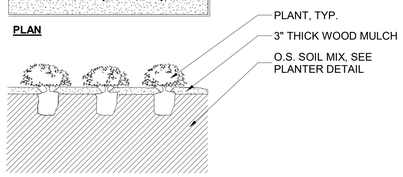

SECTION

2 L5.05 O.S. GROUNDCOVER PLANTING - LEVELS 3 & 6
3/4" = 1'-0"

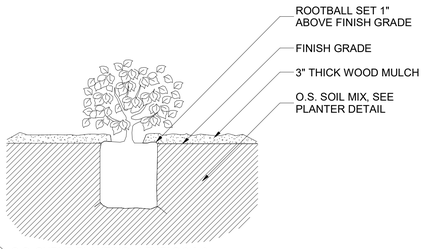

3 L5.05 O.S. SHRUB PLANTING - LEVELS 3 & 6
3/4" = 1'-0"

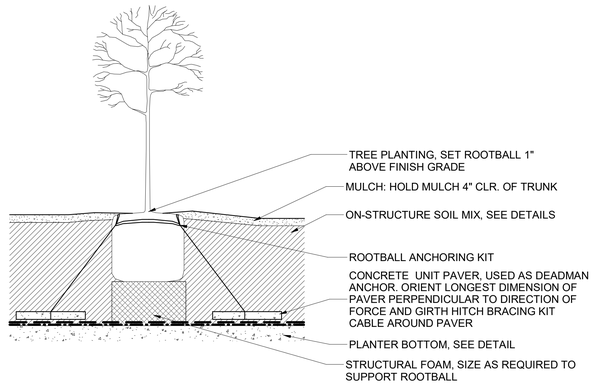

NOTES:
1. ROOTBALL ANCHORING KIT: DMK3 KIT WITH THREE ANCHOR POINTS AVAILABLE FROM GRIPPLE INC: WWW.GRIPPLE.COM. USE CONCRETE PAVERS AS DEADMAN ANCHORS.
2. CONCRETE UNIT PAVER: MODEL: WAUSAU TILE ARCHITECTURAL PAVERS H-SERIES FRONTIER LINE, SIZE: 6"W X 18" L X 2" THICK, COLOR: ANY COLOR, FINISH: ANY FINISH

4 L5.05 O.S.-TREE PLANTING - LEVEL 3
3/4" = 1'-0"

12/7/2022 10:36:49 AM

PYATOK
1611 TELEGRAPH AVE.
SUITE 200
OAKLAND, CA 94612
T. 510.465.7010 | F. 510.465.8575
www.pyatok.com

THE UNITY COUNCIL

2700 INTERNATIONAL
OAKLAND, CA 94601

STAMP:

ISSUE SCHEDULE

100 SD	5/11/22
50 DD	7/15/22
100 DD	9/16/22
50 CD	11/18/22
BUILDING PERMIT SET	12/09/22

REVISION SCHEDULE

NO.	ISSUE	DATE

JOB NUMBER:	0001
DRAWN BY:	Author
CHECKED BY:	Checker
ISSUE DATE:	12/09/22
SCALE:	As indicated

TITLE:

LANDSCAPE DETAILS - ON STRUCTURE - SHEET 4

SHEET:

L5.05

PRELIMINARY - Not for Construction -

© 2019 PYATOK ARCHITECTURE & URBAN DESIGN

CONNECT TO IRRIGATION MAINLINE STUB-OUT BY PLUMBING, AND CONTROL WIRE CONDUIT BY ELECTRICAL AT THIS LOCATION.

IRRIGATION BACKFLOW PREVENTER - MOUNT ON GARAGE WALL

IRRIGATION POINT OF CONNECTION: CONNECT TO STUB-OUT PROVIDED FROM DOMESTIC WATER SERVICE LINE. S.P.D. FOR EXACT LOCATION.

COPPER IRRIGATION MAINLINE AND PVC ELECTRICAL CONDUIT THROUGH STRUCTURE BY PLUMBING AND ELECTRICAL. SHOWN FOR REFERENCE ONLY.

CONNECT TO IRRIGATION MAINLINE STUB-OUT BY PLUMBING, AND CONTROL WIRE CONDUIT BY ELECTRICAL AT THIS LOCATION.

A - 1	1"
0.93	40
0.36	

A - 2	1"
2.0	30
0.2	

A - 5	1"
8.5	40
0.69	

SOIL MOISTURE SENSOR

4" SL.

IRRIGATION CONTROLLER 'A': WALL MOUNT ON INTERIOR GARAGE WALL AT APPROVED LOCATION.

A - 4	1"
5.2	40
0.36	

A - 3	1"
5.0	30
0.2	

2" SL.

2" SL.

2" SL.

2" SL.

3" SL.

3" SL.

3" SL.

3" SL.

3" SL.

IRRIGATION MAINLINE AND CONTROL WIRE CONDUIT UP TO LEVEL 2

INSTALL PIPE IN BED OF SAND

3" SL.

3" SL.

3" SL.

3" SL.

27TH AVENUE

MITCHELL STREET

INTERNATIONAL BOULEVARD

FOR IRRIGATION LEGEND & DETAILS, SEE SHEET L6.03

0' 2' 4' 8' 16'

SCALE: 1/8" = 1'-0"

10/24/2022 7:36:39 PM

PYATOK
1611 TELEGRAPH AVE.
SUITE 200
OAKLAND, CA 94612
T. 510.465.7010 | F. 510.465.8575
www.pyatok.com

THE UNITY COUNCIL
1900 FRUITVALE AVE
#2A
OAKLAND, CA 94601

2700 INTERNATIONAL

OAKLAND, CA 94601

STAMP:

LICENSED LANDSCAPE ARCHITECT
CHRISTOPHER M. KERN
MAY 31, 2024
Renewal Date
DEC 9, 2022
STATE OF CALIFORNIA

ISSUE SCHEDULE

100 SD	5/11/22
50 DD	7/15/22
100 DD	9/16/22
50 CD	11/18/22
PERMIT SET	12/9/22

REVISION SCHEDULE

NO.	ISSUE	DATE

JOB NUMBER:	1937
DRAWN BY:	BT
CHECKED BY:	EM
ISSUE DATE:	12/9/22
SCALE:	As indicated

TITLE:

IRRIGATION PLAN-LEVEL 1

SHEET:

L6.01

PRELIMINARY - Not for Construction -

© 2019 PYATOK ARCHITECTURE & URBAN DESIGN

DocuSign Envelope ID: F0E29E47-3408-4A02-9D94-1D329209CD3F

IRRIGATION NOTES

1. IRRIGATION SYSTEM DEMAND IS 15 GPM AT 70 PSI MINIMUM STATIC PRESSURE AT THE LEVEL 1 POINT OF CONNECTION. CONFIRM STATIC PRESSURE PRIOR TO START OF WORK. NOTIFY OWNER'S REPRESENTATIVE IF STATIC PRESSURE IS LOWER THAN STATED DEMAND. IF STATIC PRESSURE IS HIGHER THAN 90 PSI, INSTALL A WILKINS #600 PRESSURE REGULATOR DOWNSTREAM OF BACKFLOW PREVENTER. ADJUST OUTLET PRESSURE TO 70 PSI.
2. MAKE IRRIGATION POINT OF CONNECTION AS INDICATED ON PLAN AND COORDINATE WITH OTHER WORK AS REQUIRED. EXACT LOCATION OF BACKFLOW PREVENTER TO BE APPROVED BY OWNER'S REPRESENTATIVE PRIOR TO INSTALLATION.
3. INSTALL IRRIGATION CONTROLLER WHERE INDICATED ON PLAN. EXACT LOCATION OF CONTROLLER TO BE DETERMINED AT JOBSITE BY OWNER'S REPRESENTATIVE. 120 VOLT A.C. ELECTRICAL SUPPLY IS PROVIDED FOR IN IMMEDIATE VICINITY BY ELECTRICAL SECTION OF CONTRACT. MAKE FINAL 120 VOLT ELECTRICAL CONNECTIONS. USE EMT METAL CONDUIT FOR INDOOR INSTALLATIONS, AND LIQUID-TITE CONDUIT FOR OUTDOOR INSTALLATIONS. INSTALL AS DETAILED AND PER MANUFACTURER'S INSTRUCTIONS. GROUND CONTROLLER AND CONFORM TO APPLICABLE LOCAL CODES.
4. INSTALL HYDROMETER CABLE IN PVC CONDUIT FROM SENSOR TO CONTROLLER CABINET. REFER TO MANUFACTURER'S RECOMMENDATIONS FOR ADDITIONAL INFORMATION ON CABLE TYPE AND INSTALLATION REQUIREMENTS.
5. THE IRRIGATION PLAN IS DIAGRAMMATIC AND INDICATIVE OF THE WORK TO BE COMPLETED. IRRIGATION EQUIPMENT OR PIPING MAY BE SHOWN IN PAVED AREAS FOR GRAPHIC CLARITY. INSTALL ALL PIPING AND EQUIPMENT WITHIN PLANTING AREAS UNLESS OTHERWISE SHOWN ON PLANS.
6. LOCATE VALVE BOXES IN PLANTING AREAS WHERE SHOWN. STAKE EXACT LOCATIONS OF ALL VALVE BOXES AND OBTAIN APPROVAL OF OWNER'S REPRESENTATIVE PRIOR TO INSTALLATION.
7. INSTALL CHECK VALVES ON LATERAL LINES AS REQUIRED TO PREVENT LOW HEAD DRAINAGE.
8. AVOID TRENCHING WITHIN DRIP LINE OF EXISTING TREES. WHERE TRENCHING WITHIN DRIP LINE IS UNAVOIDABLE REVIEW WITH OWNER'S REPRESENTATIVE PRIOR TO START OF WORK. USE AIR SPADE OR HAND TRENCH ONLY WITHIN THESE AREAS.
9. INSTALL PIPE AND WIRE UNDER PAVING IN PVC SCH. 40 SLEEVE WHERE INDICATED ON PLAN. ELSEWHERE INSTALL PIPE IN BED OF CLEAN SAND SURROUNDING PIPE 6" ON ALL SIDES. AT LEVEL 2, INSTALL IN GRAVEL AREA OR BENEATH PAVER SYSTEM.
10. LAYOUT EMITTER TUBING PARALLEL TO TOPOGRAPHY WHEREVER POSSIBLE. THOROUGHLY FLUSH ALL PIPELINES, SUPPLY & EXHAUST HEADERS PRIOR TO INSTALLATION OF EMITTER LINE.
11. STAKE EMITTER TUBING IN PLACE AND BURY AS NOTED IN SPECIFICATIONS.

MODEL WATER EFFICIENT LANDSCAPE ORDINANCE WORKSHEET

WATER EFFICIENT LANDSCAPE WORKSHEET

This worksheet is filled out by the project applicant and it is a required element of the Landscape Documentation Package.

Reference Evapotranspiration (ETo) **is** **41.80** **ETAF for MAWA is** **0.45** Sq

Hydrozone # /Planting Description[1]	Water Use Designation	Plant Factor (PF)	Irrigation Method[2]	Irrigation Efficiency (IE)[3]	ETAF (PF/IE)	Landscape Area (sq, ft,)	ETAF x Area	Estimated Total Water Use (ETWU)[4]
Regular Landscape Areas - Controller 'A'								
A-1	Low	0.30	DRIP	0.81	0.37	251	93	**2410**
A-2	Low	0.30	DRIP	0.81	0.37	112	41	**1083**
A-3	Mod	0.50	DRIP	0.81	0.62	167	104	**2695**
A-4	Low	0.30	DRIP	0.81	0.37	401	148	**3836**
A-5	Low	0.30	DRIP	0.81	0.37	1179	436	**11299**
A-6	Low	0.30	DRIP	0.81	0.37	1008	373	**9667**
A-7	Low	0.30	DRIP	0.81	0.37	767	284	**7360**
A-8	Low	0.30	DRIP	0.81	0.37	200	74	**1918**
A-9	Low	0.30	DRIP	0.81	0.37	24	9	**233**
A-10	Low	0.30	DRIP	0.81	0.37	41	15	**389**
					Tot	**4149**	**1577**	**40870**
						(A)	(B)	
Special Landscape Areas								
					1			
					1			
					1			
					Tot	**0**	**0**	**0**
						(C)	(D)	
							ETWU Total	**40870**
							Maximum Allowed Water Allowance (MAWA)	**48386**

[1] Hydrozone #/Planting Description
1.) front lawn
2.) low water use plantings
3.) medium water use planting

[2] Irrigation Method
Spray or Drip

[3] Irrigation Efficiency
0.75 for spray head
0.81 for drip

[4] ETWU
(Annual Gallons Required) = Eto x 0.62 x ETAF x Area
Where 0.62 is a conversion factor.

[5] MAWA (Annual Gallons Allowed) = (Eto) (0.62) [(ETAF x LA) + ((1-ETAF) x SLA)]
where 0.62 is a conversion factor, LA is the total landscape area in square feet, SLA is the total special landscape area in square feet, and ETAF is .55 for residential areas and 0.45 for non- residential areas.

ETAF Calculations:

Regular Landscape Areas		
Total ETAF x Area	(B)	1577
Total Area	(A)	4149
Average ETAF	**B**÷A=	0.38

All Landscape Areas		
Total ETAF x Area	(B+D)	1577
Total Area	(A+C)	4149
Sitewide ETAF=(B+D)÷(A+C)		0.38

Average ETAF for Regular Landscape Areas must be 0.55 or below for residential areas, and 0.45 or below for non-residential areas.

PROJECT INFORMATION

DATE:	12/9/2022
PROJECT APPLICANT:	AUBRA LEVINE
PROJECT ADDRESS:	2700 INTERNATIONAL BOULEVARD OAKLAND, CA ZIP
PROJECT APPLICANT CONTACT:	AUBRA LEVINE 2700 INTERNATIONAL, LP 1900 FRUITVALE AVENUE, SUITE 2A, OAKLAND, CA 94601 (510) 535-6112 alevine@unitycouncil.org
PROJECT OWNER:	2700 INTERNATIONAL, LP 1900 FRUITVALE AVENUE, SUITE 2A, OAKLAND, CA 94601 (510) 535-6112 alevine@unitycouncil.org
TOTAL LANDSCAPE AREA:	4149 SQUARE FEET
PROJECT TYPE:	NEW/PRIVATE
WATER SUPPLY TYPE:	POTABLE
APPLICANT SIGNATURE AND DATE:	Docusigned by: Aubra Levine 12/9/2022

MWELO CERTIFICATION

I HAVE COMPLIED WITH THE CRITERIA OF THE WATER EFFICIENT LANDSCAPE ORDINANCE AND APPLIED THEM ACCORDINGLY FOR THE EFFICIENT USE OF WATER IN THE LANDSCAPE DESIGN PLAN.

LANDSCAPE ARCHITECT SIGNATURE AND DATE Christopher Ward 12/9/2022

I HAVE COMPLIED WITH THE CRITERIA OF THE WATER EFFICIENT LANDSCAPE ORDINANCE AND APPLIED THEM ACCORDINGLY FOR THE EFFICIENT USE OF WATER IN THE IRRIGATION DESIGN PLAN.

LANDSCAPE ARCHITECT OR CERTIFIED IRRIGATION DESIGNER SIGNATURE AND DATE Robert Tovar 12/9/2022

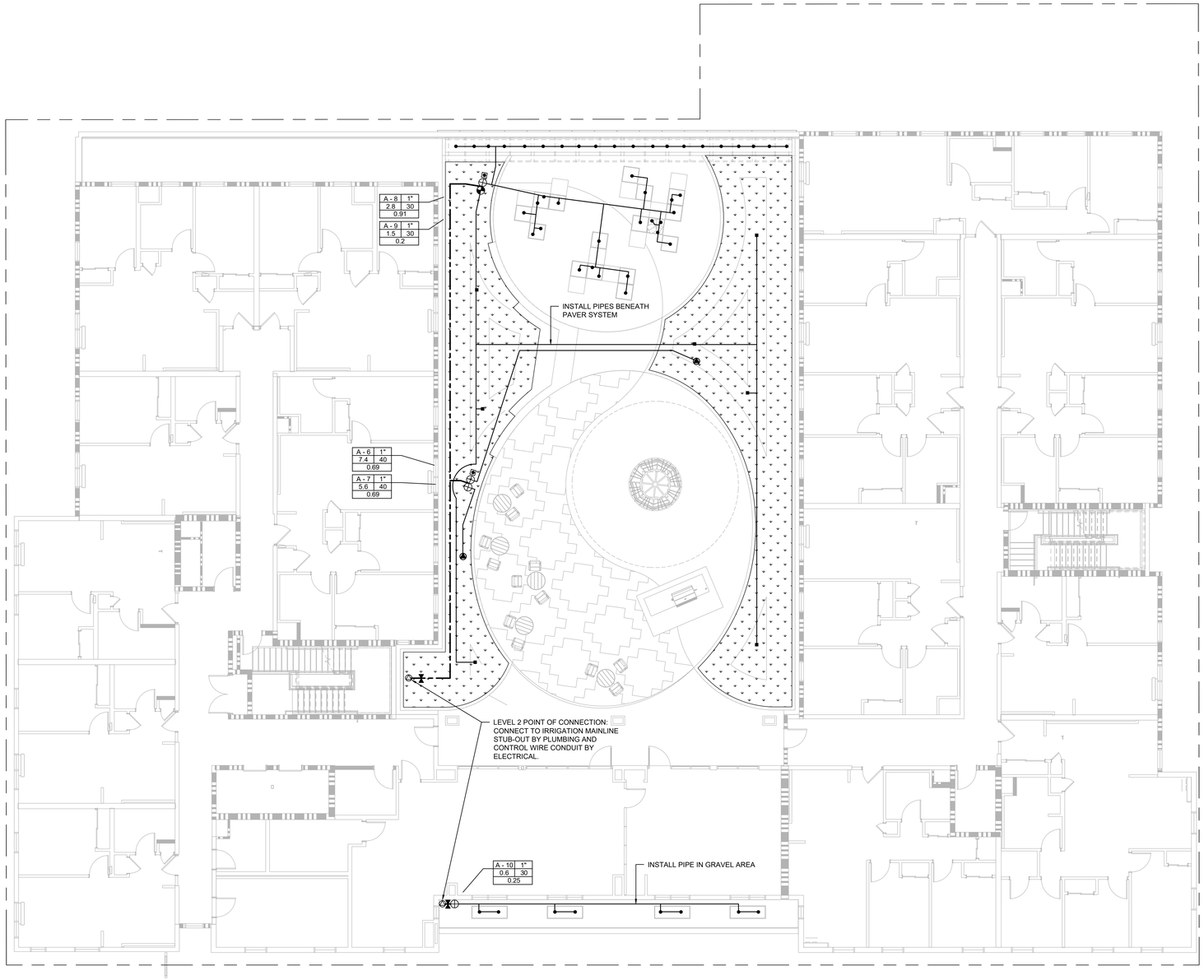

FOR IRRIGATION LEGEND & DETAILS, SEE SHEET L6.03

0' 2' 4' 8' 16'
SCALE: 1/8" = 1'-0"

PYATOK
1611 TELEGRAPH AVE.
SUITE 200
OAKLAND, CA 94612
T. 510.465.7010 | F. 510.465.8575
www.pyatok.com

THE UNITY COUNCIL
1900 FRUITVALE AVE
#2A
OAKLAND, CA 94601

2700 INTERNATIONAL
OAKLAND, CA 94601

STAMP: LICENSED LANDSCAPE ARCHITECT CHRISTOPHER M. WARD 6363 MAY 31, 2024 Renewal 3x/14 DEC 6, 2022 3x/14 STATE OF CALIFORNIA

ISSUE SCHEDULE

100 SD	5/11/22
50 DD	7/15/22
100 DD	9/16/22
50 CD	11/18/22
PERMIT SET	12/9/22

REVISION SCHEDULE

NO.	ISSUE	DATE

JOB NUMBER:	1937
DRAWN BY:	BT
CHECKED BY:	EM
ISSUE DATE:	12/9/22
SCALE:	As indicated

TITLE:
IRRIGATION PLAN-LEVEL 2

SHEET:
L6.02

PRELIMINARY - Not for Construction -

© 2019 PYATOK ARCHITECTURE & URBAN DESIGN

10/24/2022 7:36:39 PM

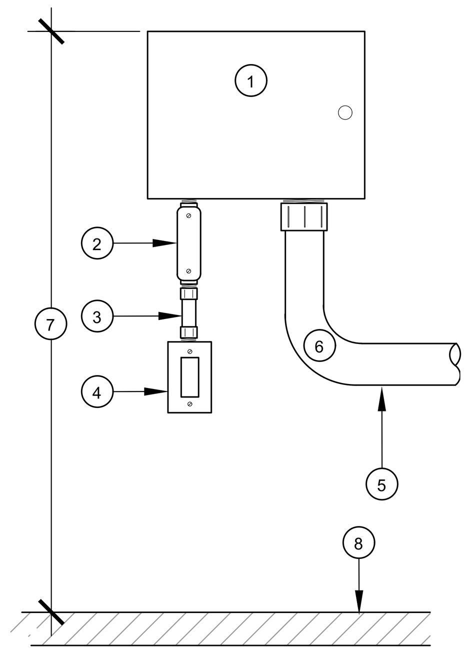

1. CONTROLLER
2. CONDUIT BODY TYPE L
3. EMT STEEL CONDUIT
4. 120 VOLT POWER SUPPLY WITH GFI POWER SWITCH
5. LOW VOLTAGE FIELD WIRING IN CONDUIT
6. LONG CONDUIT SWEEP
7. 5' OR AS DIRECTED
8. FINISH FLOOR

1 CONTROLLER - INDOOR WALL MOUNT
SCALE: NTS

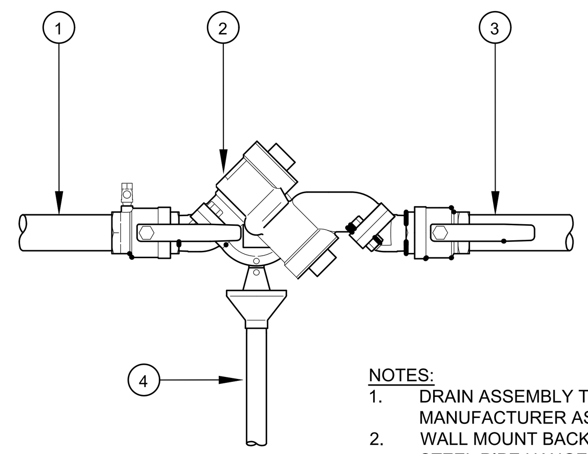

1. FROM WATER METER OR P.O.C.
2. BACKFLOW PREVENTER
3. TO SYSTEM
4. DRAIN ASSEMBLY: INSTALL AS REQUIRED TO DIRECT DISCHARGE WATER TO FLOOR DRAIN.

NOTES:
1. DRAIN ASSEMBLY TO BE SAME MANUFACTURER AS BACKFLOW PREVENTER.
2. WALL MOUNT BACKFLOW PREVENTER USING STEEL PIPE HANGERS.
3. INSTALL BACKFLOW PREVENTER SUCH THAT SHUT-OFF VALVES AND TEST COCKS ARE ALL ACCESSIBLE.

2 WALL MOUNTED BACKFLOW PREVENTER
SCALE: NTS

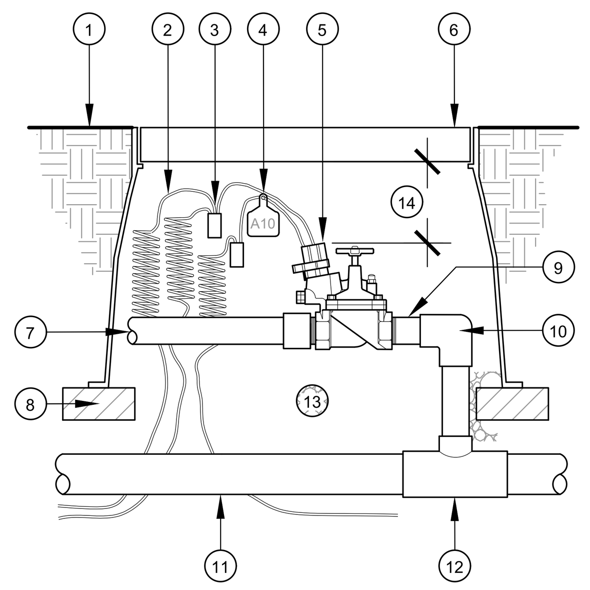

1. FINISH GRADE
2. CONTROL WIRES
3. WATERPROOF SPLICE
4. VALVE NUMBER TAG
5. REMOTE CONTROL VALVE
6. VALVE BOX
7. LATERAL LINE
8. BRICK, 4 REQ'D
9. SCH. 80 PVC NIPPLE, T.O.E.
10. SCH. 80 PVC ELL, SxT
11. MAINLINE
12. SCH. 40 PVC TEE OR ELL
13. DRAIN ROCK
14. 3" MINIMUM

NOTE: WRAP FILTER FABRIC AROUND AND UNDER VALVE BOX PRIOR TO INSTALLATION OF DRAIN ROCK.

3 REMOTE CONTROL VALVE
SCALE: NTS

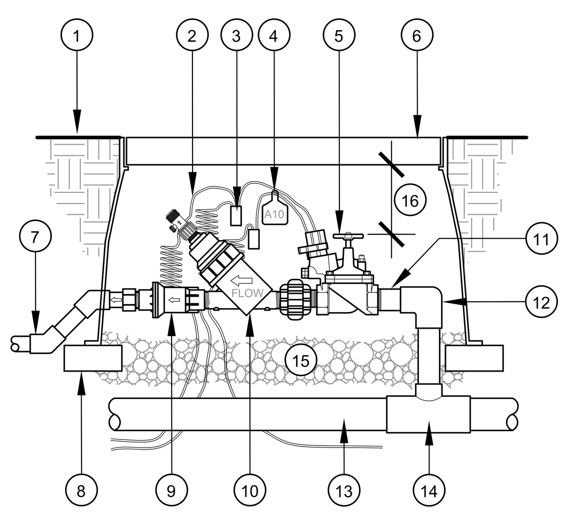

1. FINISH GRADE
2. CONTROL WIRES
3. WATERPROOF SPLICE
4. VALVE NUMBER TAG
5. REMOTE CONTROL VALVE
6. VALVE BOX
7. LATERAL LINE
8. BRICK, 4 REQ'D
9. PRESSURE REGULATOR
10. FILTER
11. SCH. 80 PVC NIPPLE, T.O.E.
12. SCH. 80 PVC ELL, SxT
13. MAINLINE
14. SCH. 40 PVC TEE OR ELL
15. DRAIN ROCK
16. 3" MINIMUM

NOTE: WRAP FILTER FABRIC AROUND AND UNDER VALVE BOX PRIOR TO INSTALLATION OF DRAIN ROCK.

4 DRIP ZONE REMOTE CONTROL VALVE
SCALE: NTS

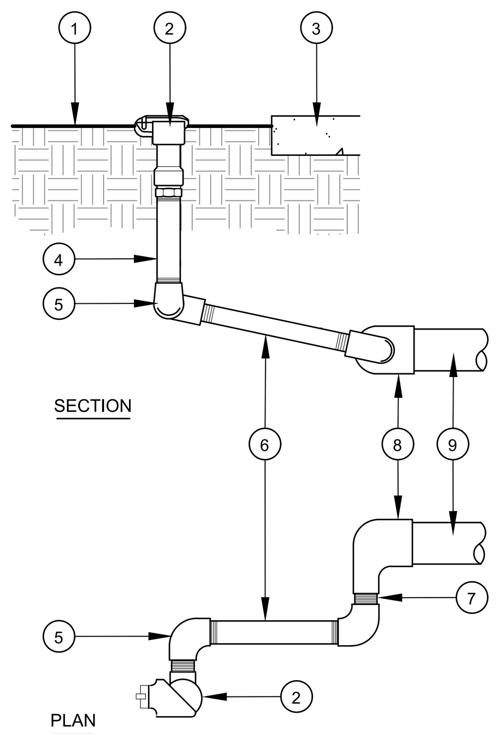

1. FINISH GRADE
2. QUICK COUPLER
3. PAVEMENT OR ADJACENT VALVE BOX
4. SCH. 80 PVC NIPPLE 4" LONG
5. SCH. 80 90° ELL, TxT, 3 REQ'D.
6. SCH. 80 PVC NIPPLE, LENGTH AS REQUIRED
7. 3" SCH. 80 PVC NIPPLE, 2 REQ'D.
8. FEMALE ADAPTER OR SxT ELL
9. MAINLINE

5 QUICK COUPLING VALVE
SCALE: NTS

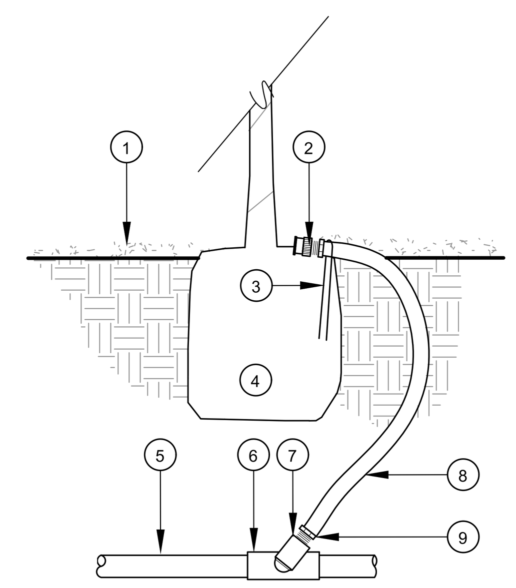

1. FINISH GRADE WITH MULCH COVER
2. BUBBLER OR EMITTER
3. WIRE STAPLE INTO ROOTBALL
4. ROOTBALL
5. LATERAL LINE
6. SxSxT TEE
7. SCH 40 PVC STREET ELL
8. 1/2" IPS FLEX PVC TUBE
9. MALE ADAPTER

INSTALL BUBBLER ON TOP OF ROOTBALL. STAKE IN PLACE WITH WIRE STAPLE AND COVER WITH MULCH.

6 BUBBLER OR EMITTER ON FLEX RISER
SCALE: NTS

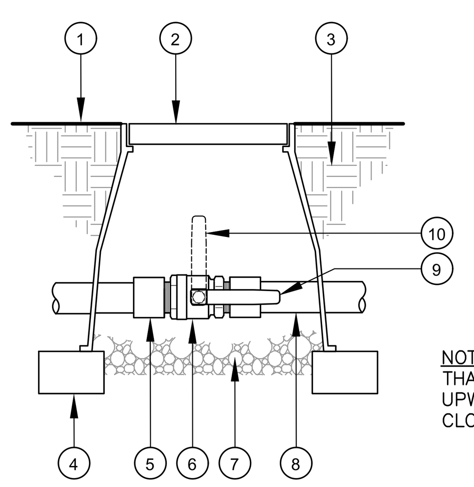

1. FINISH GRADE
2. VALVE BOX
3. AMENDED PLANTER SOIL
4. BRICK, 2 REQ'D.
5. PVC MALE ADAPTER
6. BRONZE BALL VALVE
7. DRAIN ROCK
8. PVC MAINLINE
9. OPERATING HANDLE - OPEN POSITION
10. OPERATING HANDLE - CLOSED POSITION

NOTE: ORIENT BALL VALVE SUCH THAT OPERATING HANDLE POINTS UPWARD AS SHOWN WHEN IN CLOSED POSITION.

7 MAINLINE ISOLATION BALL VALVE
SCALE: NTS

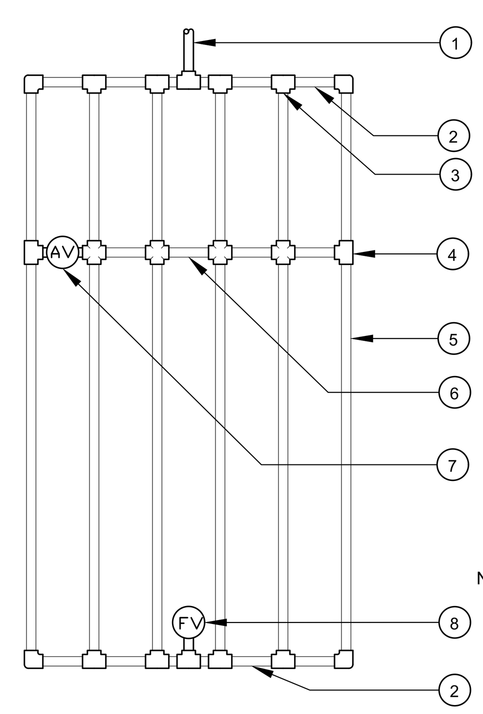

1. PVC LATERAL LINE
2. FLEX PVC SUPPLY AND EXHAUST HEADERS
3. SCH 40 PVC FITTING WITH COMPRESSION ADAPTER
4. COMPRESSION FITTING
5. SUBSURFACE EMITTER TUBING
6. "BLANK" TUBING USED TO PLUMB AIR/VACUUM RELIEF VALVE
7. AIR/VACUUM RELIEF VALVE: INSTALL AT ALL HIGH POINTS ON EACH EMITTER GRID
8. AUTOMATIC FLUSH VALVE

NOTE: PLUMB FLUSH VALVE TO HYDRAULIC CENTER OF EXHAUST HEADER. INSTALL ADDITIONAL MANUAL FLUSH BALL VALVE WHERE INDICATED ON PLAN.

8 SUBSURFACE IRRIGATION LAYOUT
SCALE: NTS

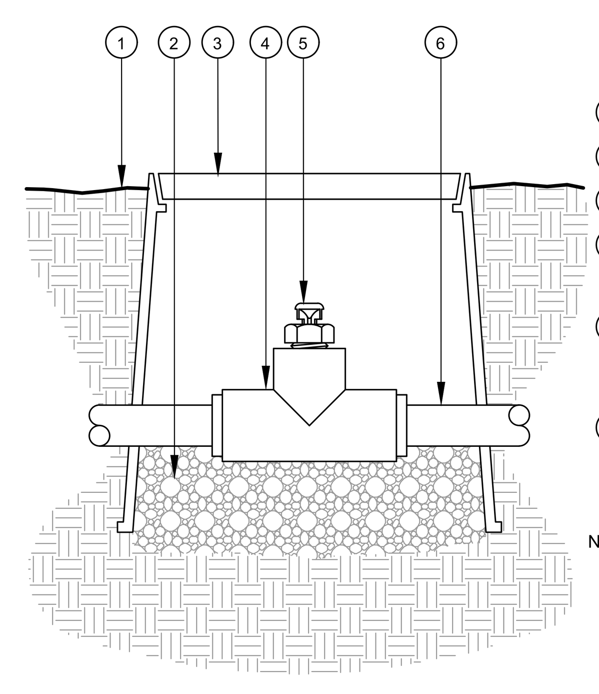

1. FINISH GRADE
2. 3/4" DRAIN ROCK
3. 6" ROUND VALVE BOX
4. 1/2" PVC TEE WITH THREADED OUTLET AND COMPRESSION ADAPTERS
5. AIR/VACUUM RELIEF VALVE: INSTALL AT ALL HIGH POINTS ON EACH EMITTER GRID
6. "BLANK" TUBING

NOTE: CONNECT AIR/VACUUM RELIEF VALVE TUBING ACROSS ALL ROWS OF EMITTER TUBING.

9 AIR/VACUUM RELIEF VALVE
SCALE: NTS

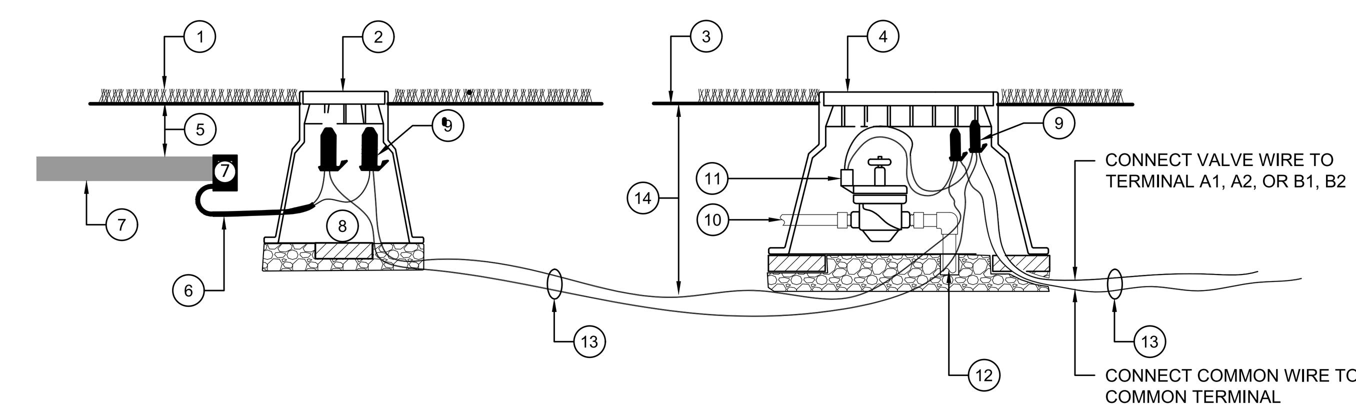

1. LAWN OR SURFACE TREATMENT
2. 6" ROUND JUNCTION BOX
3. FINISHED GRADE
4. VALVE BOX
5. 2-3" IN TURF AREAS; 4-6" IN SHRUB AREAS
6. biSENSOR CABLE
7. biSENSOR - SET LENGTH HORIZONTALLY AND BLADE IN VERTICAL POSITION WITH SLEEVED WIRES OUT OF BOTTOM
8. SUPPORT BLOCK - 2 REQUIRED
9. SPECIFIED WATERPROOF SPLICE KIT
10. LATERAL LINE
11. REMOTE CONTROL VALVE - SEE SEPARATE DETAIL
12. MAINLINE
13. CONTROL WIRES
14. DEPTH OF COVER PER SPECIFICATIONS

10 SOIL MOISTURE SENSOR INSTALLATION AND WIRING
SCALE: NTS

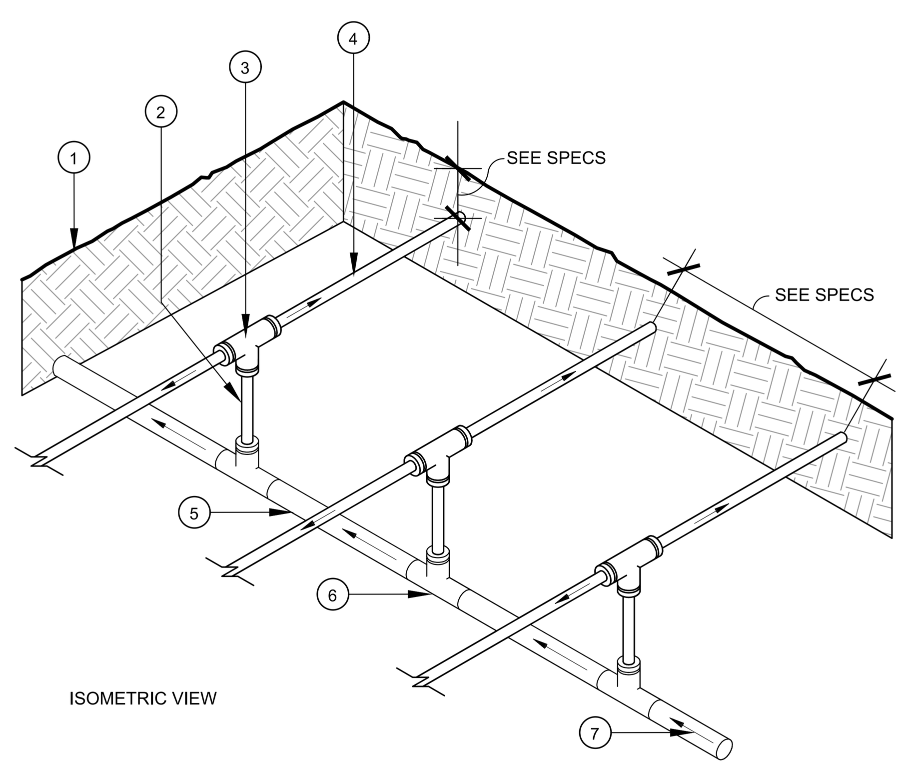

1. FINISH GRADE
2. "BLANK" TUBING
3. COMPRESSION FITTING
4. SUBSURFACE EMITTER TUBING
5. FLEX PVC SUPPLY HEADER
6. SCH 40 PVC FITTING WITH COMPRESSION ADAPTER
7. FROM REMOTE CONTROL VALVE

11 SUBSURFACE TYPICAL CENTER-FEED SUPPLY MANIFOLD
SCALE: NTS

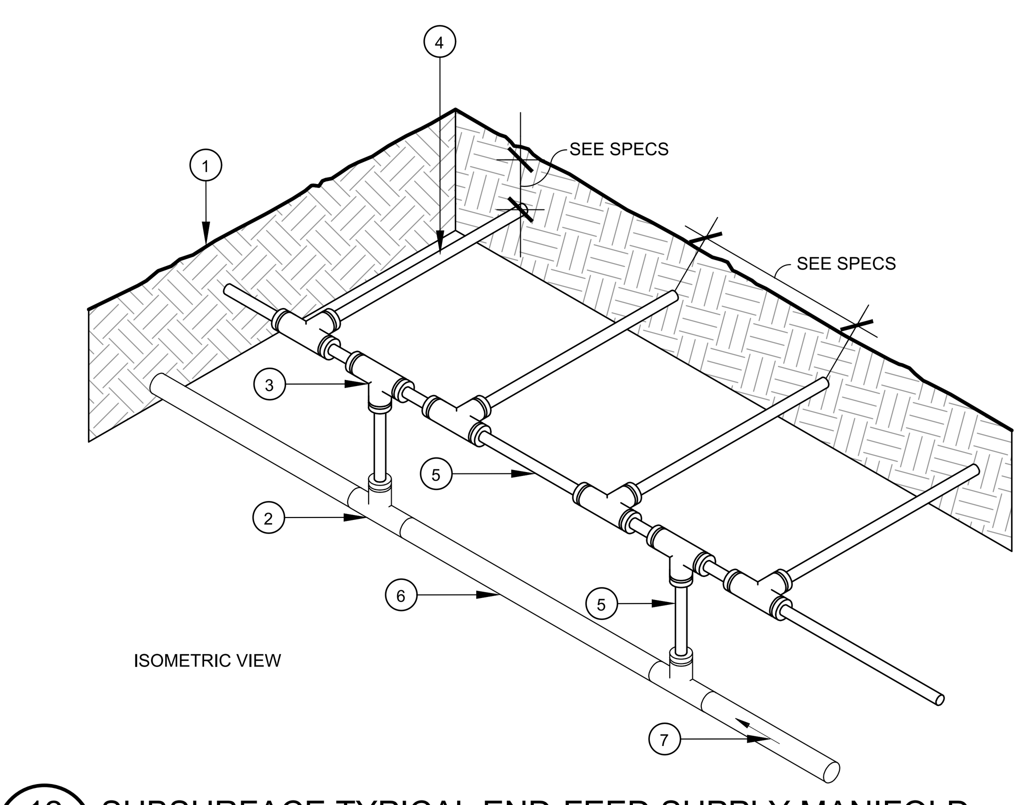

1. FINISH GRADE
2. SCH 40 PVC FITTING WITH COMPRESSION ADAPTER
3. COMPRESSION FITTING
4. SUBSURFACE EMITTER TUBING
5. "BLANK" TUBING
6. FLEX PVC SUPPLY HEADER
7. FROM REMOTE CONTROL VALVE

12 SUBSURFACE TYPICAL END-FEED SUPPLY MANIFOLD
SCALE: NTS

IRRIGATION LEGEND

SYMBOL	MODEL	DESCRIPTION	PSI	GPM
	HEB-40	HUNTER PRESSURE COMPENSATING EMITTER INSTALL ON FLEX RISER	30	4 GPH
	PCB-25	HUNTER PRESSURE COMPENSATING BUBBLER INSTALL ON FLEX RISER	30	0.25
	RZWS-18-25-CV	HUNTER ROOT ZONE WATERING SYSTEM	30	0.25
A	ICA16-BL1-100	ITS / BASELINE CONTROLLER - WALL MOUNT ASSEMBLY, WITH AVAILABLE FROM IMPERIAL TECHNICAL SERVICES (925) 667-2190		
	BL-5315B	BASELINE SOIL MOISTURE SENSOR		
	825YA-1"	FEBCO BACKFLOW PREVENTER - INSTALL IN		
	BL-BHM150-NO	BASELINE HYDROMETER - NORMALLY OPEN		
	T-585-70	NIBCO FULL PORT BRONZE BALL VALVE - LINE SIZE		
	11000 SERIES	WEATHERMATIC REMOTE CONTROL VALVE		
	DRIP OR SUBSURFACE IRRIGATION CONTROL VALVE ASSEMBLY, TO INCLUDE: 11024FCR-10 PR-075-L-30 4EH-3/4A-150	 WEATHERMATIC REMOTE CONTROL VALVE JAIN 30# PRESSURE REGULATOR JAIN FILTER		
	33 DNP	RAIN BIRD QUICK COUPLING VALVE		
	POINT OF CONNECTION FROM STRUCTURE: 1" IRRIGATION MAINLINE BY PLUMBER, 1" ELECTRICAL CONDUIT BY ELECTRICAL.			
	CONNECTION FROM PVC LATERAL LINE TO DRIP IRRIGATION ZONE			
	MAINLINE: SCH 40 PVC SOLVENT WELD PIPE WITH SCH 40 PVC SOLVENT WELD FITTINGS-18" COVER. ALL MAINLINE TO BE SIZE 1-1/4" UNLESS OTHERWISE NOTED ON PLAN.			
	MAINLINE: THROUGH OR WITHIN STRUCTURE, COPPER INSTALLED BY PLUMBER.			
	LATERAL LINE: SCH 40 PVC SOLVENT WELD PIPE WITH SCH 40 PVC SOLVENT WELD FITTINGS-12" COVER. ALL MAINLINE TO BE SIZE 3/4" UNLESS OTHERWISE NOTED ON PLAN.			
	LATERAL LINE: THROUGH OR WITHIN STRUCTURE, COPPER INSTALLED BY PLUMBER.			
	SUBSURFACE DRIP IRRIGATION - LEVEL 1, EXCEPT STORMWATER PLANTERS: TORO DL2000 MODEL RGP-218-E EMITTER LINE WITH TORO TRI-LOC FITTINGS. 0.5 GPH EMITTER FLOW, 18" EMITTER SPACING; APPROX. 18" LINE SPACING. 3-4" SOIL COVER IN SHRUB/GROUNDCOVER AREAS.			
	SUBSURFACE DRIP IRRIGATION - ALL ON-STRUCTURE AREAS AND STORMWATER PLANTERS AT LEVEL 1: TORO DL2000 MODEL RGP-212-E EMITTER LINE WITH TORO TRI-LOC FITTINGS. 0.5 GPH EMITTER FLOW, 12" EMITTER SPACING; APPROX. 14" LINE SPACING. 3-4" SOIL COVER IN SHRUB/GROUNDCOVER AREAS.			

CONTROLLER / STATION NUMBER — A - 1 — REMOTE CONTROL VALVE SIZE — 1"
APPROXIMATE GPM THROUGH VALVE — 20 — ZONE OPERATING PRESSURE (PSI) — 30
APPROXIMATE PRECIPITATION RATE ("/HR) — 0.25

PYATOK
1611 TELEGRAPH AVE.
SUITE 200
OAKLAND, CA 94612
T. 510.465.7010 | F. 510.465.8575
www.pyatok.com

THE UNITY COUNCIL
1900 FRUITVALE AVE
#2A
OAKLAND, CA 94601

2700 INTERNATIONAL
OAKLAND, CA 94601

STAMP:

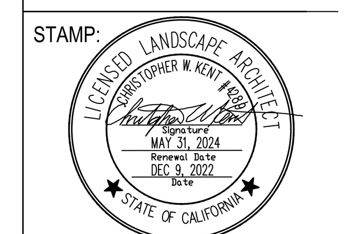

ISSUE SCHEDULE

100 SD	5/11/22
50 DD	7/15/22
100 DD	9/16/22
50 CD	11/18/22
PERMIT SET	12/9/22

REVISION SCHEDULE

NO.	ISSUE	DATE

JOB NUMBER:	1937
DRAWN BY:	BT
CHECKED BY:	EM
ISSUE DATE:	12/9/22
SCALE:	As indicated

TITLE:
IRRIGATION LEGEND & DETAILS

SHEET:
L6.03

PRELIMINARY - Not for Construction -

© 2019 PYATOK ARCHITECTURE & URBAN DESIGN

10/24/2022 7:36:39 PM

SITE PLAN - EXISTING (1)
1/16" = 1'-0"

0' 4' 8' 16' 32'

SCALE: 1/16" = 1'-0"

SITE PLAN NOTES

1. PROVIDE BARRIER-FREE 'ACCESSIBLE ROUTE OF TRAVEL FOR SITE ACCESSIBILITY PER THE BARRIER FREE NOTES AND CBC CHAPTER 11A AND/OR CHAPTER 11B.

2. SITE LIGHTING TO BE ON-BUILDING OR ON POLES, BAFFLED AND DIRECTED DOWNWARD TO PROTECT AGAINST OFF-SITE LIGHTING IMPACTS. LIGHTING LEVELS AND ILLUMINATION SHALL BE DESIGNED TO REDUCE GLARE.

3. CURB RAMPS SHALL NOT EXCEED A SLOPE OF 1:12 (8.33%).

4. ENTRANCE RAMPS TO BUILDINGS SHALL NOT EXCEED A SLOPE OF 1:20 (5%) UNLESS RAILINGS ARE SHOWN ON THE ARCHITECTURAL SITE PLAN, IN WHICH CASE, THE SLOPE SHALL NOT EXCEED 1:12 (8.33%).

5. A MAXIMUM 2% SLOPE LANDING SHALL BE PROVIDED AT PEDESTRIAN ENTRANCES TO BUILDINGS.

6. THE MAXIMUM CROSS SLOPE AT ANY RAMP OR SIDEWALK SHALL NOT EXCEED 2%. THE MAXIMUM SLOPE WITHIN PARKING STALLS SHALL BE 2% IN ANY DIRECTION.

7. ALL ELEVATIONS ARE BASED ON SEA LEVEL, U.O.N.

BARRIER FREE NOTES

1. ALL WORK SHALL CONFORM TO THE 2019 CALIFORNIA BUILDING CODE (CBC), SUBJECT TO THE AMENDMENTS ADOPTED BY LOCAL MUNICIPALITY.

2. DOORS TO ACCESSIBLE SPACES MUST HAVE A MINIMUM CLEAR OPENING WIDTH OF 32" (3'-0" DOOR) PER CBC SECTION 11-B 404.2.3. AND ALL 2'-10" DOORS SHALL MAINTAIN THE MINIMUM 32" OPENING WHEN IN THE 90-DEGREE POSITION THROUGH THE USE OF OFFSET HINGES.

3. THE FLOOR LEVEL CHANGE AT DOORS REQUIRED TO BE ACCESSIBLE IN TYPE A AND B UNITS AND COMMON SPACES SHALL HAVE A MAXIMUM THRESHOLD HEIGHT OF ½" ALONG THE ACCESSIBLE ROUTE OF TRAVEL PER THE CBC SECTION 11-B 404.2.5. CHANGES IN LEVEL ALONG THE ACCESSIBLE ROUTE OF TRAVEL AND ACCESSIBLE SPACES WITHIN BUILDINGS IN EXCESS OF ¼" SHALL BE CANTED AT 2:1 HORIZONTAL TO VERTICAL AND WHERE IN EXCESS OF ½" SHALL BE PER CBC SECTION 11-B 405 FOR RAMPS.

4. FOR A FORWARD APPROACH, WHERE A DOOR MUST BE PULLED TO BE OPENED, AN UNOBSTRUCTED FLOOR SPACE SHALL EXTEND AT LEAST 18 INCHES BEYOND THE STRIKE JAMB AND EXTEND AT LEAST 60 INCHES PERPENDICULAR TO THE DOORWAY. FOR A FORWARD APPROACH, WHERE A DOOR MUST BE PUSHED TO BE OPENED AND IS EQUIPPED WITH A CLOSER AND A LATCH, AN UNOBSTRUCTED FLOOR SPACE SHALL EXTEND AT LEAST 12 INCHES BEYOND THE STRIKE SIDE JAMB AND EXTEND AT LEAST 48 INCHES PERPENDICULAR TO THE DOORWAY.

5. ACCESSIBLE PATH OF TRAVEL AS INDICATED ON PLAN IS A BARRIER FREE ROUTE WITHOUT ANY ABRUPT LEVEL CHANGES EXCEEDING 1/2" IF BEVELED AT 1:12 MAX SLOPE, OR VERTICAL CHANGES NOT EXCEEDING 1/4" MAX AND AT LEAST 48" IN WIDTH. THE SURFACE IS STABLE, FIRM AND SLIP RESISTANT. CROSS SLOPE DOES NOT EXCEED 2% AND SLOPE IN THE DIRECTION OF TRAVEL IS LESS THAN 5%, UNLESS OTHERWISE INDICATED,ACCESSIBLE PATH OF TRAVEL SHALLBE MAINTAINED FREE OF OVERHANGING OBSTRUCTIONS TO 80" MINIMUM,AND PROTRUDING OBJECTS GREATER THAN 4" PROJECTION FROM THE WALL AND ABOVE 27" AND LESS THAN 80".

6. ALL ACCESSIBLE ROUTES OF TRAVEL SHALL COMPLY WITH THE FOLLOWING:
A. 48" MINIMUM FOR WALKS AND SIDEWALKS.
B. 48" MINIMUM FOR CURB RAMPS.
C. 48" MINIMUM FOR RAMPS, OR 60" MINIMUM IF SERVING AN OCCUPANT LOAD OF GREATER THAN 300 AND THE ENTRANCE RAMP ISTHE ONLY EXIT DISCHARGE PATH FROM THE BUILDING
D. 36" MINIMUM FOR CORRIDORS, HALLWAYS AND EXTERIOR EXIT BALCONIES IF SERVING AN OCCUPANCY LOAD OF LESS THAN 10, OR 44" MINIMUM IF SERVING AN OCCUPANCY OF 10 OR MORE.
E. FOR CORRIDORS, HALLWAYS AND EXTERIOR EXIT BALCONIES EXCEEDING 200'-0" IN LENGTH PROVIDE
60" MIN CLEAR WITH OR 60" X 60" PASSING SPACE AT REASONALBE INTERVALS OF 200'-0" OR LESS. A T-SHAPED INTERSECTION OF TWO 36" MIN WIDTH CORRIDORS IS AN ACCEPTABLE ALTERNATE PASSING SPACE.
F. 44" MINIMUM WITHIN AN MULTIPLE ACCOMODATION TOILET ROOM TO AND FROM ACCESSIBLE COMPARTMENTS.
G. 36" MINIMUM WITHIN A SINGLE ACCOMODATION TOILET ROOM EXCEPT AT DOORS.
H. 36" MINIMUM AT AISLES SERVING ONE SIDE ONLY
I. 44" MIINIMUM AT AISLES SERVING BOTH SIDES

7. DOORS (IN ANY POSITION) SHALL NOT REDUCE THE REQUIRED WIDTH OF A CORRIDOR, HALLWAY OR EXIT BALCONY BY MORE THAN 50%

8. EXIT TRAVEL LIMITATIONS IN A SPRINKLERED BUILDING PER CBC TABLE 1017.2:
A OCCUPANCY: 250'-0"
B OCCUPANCY: 300'-0"
M OCCUPANCY: 250'-0"
R-2 OCCUPANCY: 250'-0"
S-2 OCCUPANCY: 400'-0"

PYATOK
1611 TELEGRAPH AVE.
SUITE 200
OAKLAND, CA 94612
T. 510.465.7010 | F. 510.465.8575
www.pyatok.com

THE UNITY COUNCIL
1900 FRUITVALE AVE
#2A
OAKLAND, CA 94601

2700 INTERNATIONAL
OAKLAND, CA 94601

STAMP:
LICENSED ARCHITECT
PETER WALLER
C-23554
4/30/2023
STATE OF CALIFORNIA

ISSUE SCHEDULE

100 SD	5/11/22
50 DD	7/15/22
100 DD	9/16/22
50 CD	11/18/22
PERMIT SET	12/09/22

REVISION SCHEDULE

NO.	ISSUE	DATE

JOB NUMBER:	1937
DRAWN BY:	MA, DV, TN, MO, SP
CHECKED BY:	Checker
ISSUE DATE:	12/09/22
SCALE:	As indicated

TITLE:
SITE PLAN - EXISTING

SHEET:
A1.00

PRELIMINARY - Not for Construction -

© 2019 PYATOK ARCHITECTURE & URBAN DESIGN

12/8/2022 6:03:34 PM

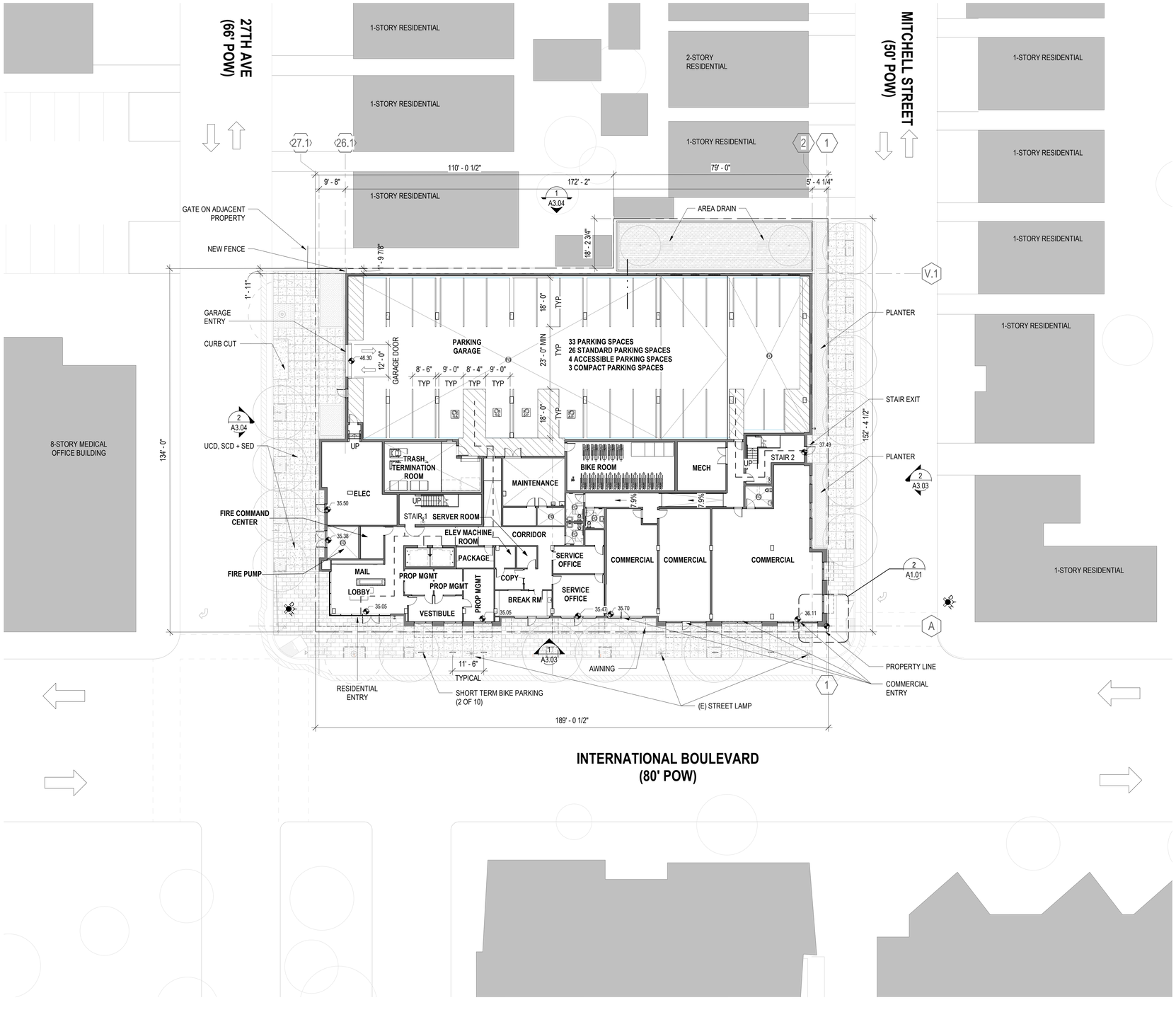

SITE PLAN - PROPOSED 1
1/16" = 1'-0"

SITE PLAN NOTES

1. PROVIDE BARRIER-FREE 'ACCESSIBLE ROUTE OF TRAVEL FOR SITE ACCESSIBILITY PER THE BARRIER FREE NOTES AND CBC CHAPTER 11A AND/OR CHAPTER 11B.

2. SITE LIGHTING TO BE ON-BUILDING OR ON POLES, BAFFLED AND DIRECTED DOWNWARD TO PROTECT AGAINST OFF-SITE LIGHTING IMPACTS. LIGHTING LEVELS AND ILLUMINATION SHALL BE DESIGNED TO REDUCE GLARE.

3. CURB RAMPS SHALL NOT EXCEED A SLOPE OF 1:12 (8.33%).

4. ENTRANCE RAMPS TO BUILDINGS SHALL NOT EXCEED A SLOPE OF 1:20 (5%) UNLESS RAILINGS ARE SHOWN ON THE ARCHITECTURAL SITE PLAN, IN WHICH CASE, THE SLOPE SHALL NOT EXCEED 1:12 (8.33%).

5. A MAXIMUM 2% SLOPE LANDING SHALL BE PROVIDED AT PEDESTRIAN ENTRANCES TO BUILDINGS.

6. THE MAXIMUM CROSS SLOPE AT ANY RAMP OR SIDEWALK SHALL NOT EXCEED 2%. THE MAXIMUM SLOPE WITHIN PARKING STALLS SHALL BE 2% IN ANY DIRECTION.

7. ALL ELEVATIONS ARE BASED ON SEA LEVEL, U.O.N.

BARRIER FREE NOTES

1. ALL WORK SHALL CONFORM TO THE 2019 CALIFORNIA BUILDING CODE (CBC), SUBJECT TO THE AMENDMENTS ADOPTED BY LOCAL MUNICIPALITY.

2. DOORS TO ACCESSIBLE SPACES MUST HAVE A MINIMUM CLEAR OPENING WIDTH OF 32" (3'-0" DOOR) PER CBC SECTION 11-B 404.2.3. AND ALL 2'-10" DOORS SHALL MAINTAIN THE MINIMUM 32" OPENING WHEN IN THE 90-DEGREE POSITION THROUGH THE USE OF OFFSET HINGES.

3. THE FLOOR LEVEL CHANGE AT DOORS REQUIRED TO BE ACCESSIBLE IN TYPE A AND B UNITS AND COMMON SPACES SHALL HAVE A MAXIMUM THRESHOLD HEIGHT OF ½" ALONG THE ACCESSIBLE ROUTE OF TRAVEL PER THE CBC SECTION 11-B 404.2.5. CHANGES IN LEVEL ALONG THE ACCESSIBLE ROUTE OF TRAVEL AND ACCESSIBLE SPACES WITHIN BUILDINGS IN EXCESS OF ¼" SHALL BE CANTED AT 2:1 HORIZONTAL TO VERTICAL AND WHERE IN EXCESS OF ½" SHALL BE PER CBC SECTION 11-B 405 FOR RAMPS.

4. FOR A FORWARD APPROACH, WHERE A DOOR MUST BE PULLED TO BE OPENED, AN UNOBSTRUCTED FLOOR SPACE SHALL EXTEND AT LEAST 18 INCHES BEYOND THE STRIKE JAMB AND EXTEND AT LEAST 60 INCHES PERPENDICULAR TO THE DOORWAY. FOR A FORWARD APPROACH, WHERE A DOOR MUST BE PUSHED TO BE OPENED AND IS EQUIPPED WITH A CLOSER AND A LATCH, AN UNOBSTRUCTED FLOOR SPACE SHALL EXTEND AT LEAST 12 INCHES BEYOND THE STRIKE SIDE JAMB AND EXTEND AT LEAST 48 INCHES PERPENDICULAR TO THE DOORWAY.

5. ACCESSIBLE PATH OF TRAVEL AS INDICATED ON PLAN IS A BARRIER FREE ROUTE WITHOUT ANY ABRUPT LEVEL CHANGES EXCEEDING 1/2" IF BEVELED AT 1:12 MAX SLOPE, OR VERTICAL CHANGES NOT EXCEEDING 1/4" MAX AND AT LEAST 48" IN WIDTH. THE SURFACE IS STABLE, FIRM AND SLIP RESISTANT. CROSS SLOPE DOES NOT EXCEED 2% AND SLOPE IN THE DIRECTION OF TRAVEL IS LESS THAN 5%, UNLESS OTHERWISE INDICATED,ACCESSIBLE PATH OF TRAVEL SHALLBE MAINTAINED FREE OF OVERHANGING OBSTRUCTIONS TO 80" MINIMUM,AND PROTRUDING OBJECTS GREATER THAN 4" PROJECTION FROM THE WALL AND ABOVE 27" AND LESS THAN 80".

6. ALL ACCESSIBLE ROUTES OF TRAVEL SHALL COMPLY WITH THE FOLLOWING:
   A. 48" MINIMUM FOR WALKS AND SIDEWALKS.
   B. 48" MINIMUM FOR CURB RAMPS
   C. 48" MINIMUM FOR RAMPS, OR 60" MINIMUM IF SERVING AN OCCUPANT LOAD OF GREATER THAN 300 AND THE ENTRANCE RAMP ISTHE ONLY EXIT DISCHARGE PATH FROM THE BUILDING
   D. 36" MINIMUM FOR CORRIDORS, HALLWAYS AND EXTERIOR EXIT BALCONIES IF SERVING AN OCCUPANCY LOAD OF LESS THAN 10, OR 44" MINIMUM IF SERVING AN OCCUPANCY OF 10 OR MORE.
   E. FOR CORRIDORS, HALLWAYS AND EXTERIOR EXIT BALCONIES EXCEEDING 200'-0" IN LENGTH PROVIDE
   60" MIN CLEAR WITH OR 60" X 60" PASSING SPACE AT REASONALBE INTERVALS OF 200'-0" OR LESS. A T-SHAPED INTERSECTION OF TWO 36" MIN WIDTH CORRIDORS IS AN ACCEPTABLE ALTERNATE PASSING SPACE.
   F. 44" MINIMUM WITHIN AN MULTIPLE ACCOMODATION TOILET ROOM TO AND FROM ACCESSIBLE COMPARTMENTS.
   G. 36" MINIMUM WITHIN A SINGLE ACCOMODATION TOILET ROOM EXCEPT AT DOORS.
   H. 36" MINIMUM AT AISLES SERVING ONE SIDE ONLY
   I. 44" MIINIMUM AT AISLES SERVING BOTH SIDES

7. DOORS (IN ANY POSITION) SHALL NOT REDUCE THE REQUIRED WIDTH OF A CORRIDOR, HALLWAY OR EXIT BALCONY BY MORE THAN 50%

8. EXIT TRAVEL LIMITATIONS IN A SPRINKLERED BUILDING PER CBC TABLE 1017.2:
   A OCCUPANCY: 250'-0"
   B OCCUPANCY: 300'-0"
   M OCCUPANCY: 250'-0"
   R-2 OCCUPANCY: 250'-0"
   S-2 OCCUPANCY: 400'-0"

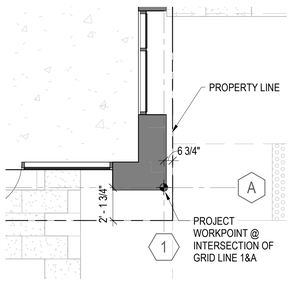

WORKPOINT - DETAIL 2
1/4" = 1'-0"

0' 4' 8' 16' 32'

SCALE: 1/16" = 1'-0"

PYATOK
1611 TELEGRAPH AVE.
SUITE 200
OAKLAND, CA 94612
T. 510.465.7010 | F. 510.465.8575
www.pyatok.com

THE UNITY COUNCIL
1900 FRUITVALE AVE
#2A
OAKLAND, CA 94601

2700 INTERNATIONAL

OAKLAND, CA 94601

STAMP:

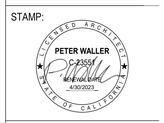

ISSUE SCHEDULE

100 SD	5/11/22
50 DD	7/15/22
100 DD	9/16/22
50 CD	11/18/22
PERMIT SET	12/09/22

REVISION SCHEDULE

NO.	ISSUE	DATE

JOB NUMBER:	1937
DRAWN BY:	MA, DV, TN, MO, SP
CHECKED BY:	Checker
ISSUE DATE:	12/09/22
SCALE:	As indicated

TITLE:

SITE PLAN - PROPOSED

SHEET:

A1.01

PRELIMINARY - Not for Construction -

© 2019 PYATOK ARCHITECTURE & URBAN DESIGN

12/8/2022 6:03:38 PM

FLOOR PLAN GENERAL NOTES

1. SEE SHEET G0.00 FOR SYMBOLS & ABBREVIATIONS
2. THESE PLANS SHOW UNIQUE INFORMATION ONLY. SEE ENLARGED PLANS FOR INFORMATION NOT SHOWN.
3. REFERENCE ACCESSIBILITY CODE SHEETS G0.31 - G0.37 FOR ALL ACCESSIBILITY STANDARDS, REQUIREMENTS AND DIAGRAMS
4. SEE CIVIL PLANS FOR THE BUILDING LOCATION ON SITE AND PRECISE GRADING PLANS.
5. FOR PARKING TABULATION REFER TO SHEET G0.00.
6. ALL DIMENSIONS ARE TO FACE OF MASONRY, CONCRETE, STUD, OR CENTERLINE OF COLUMN OR DEMISING WALL (C.L.). U.O.N. ALL "CLEAR" DIMENSIONS ARE TO FACE OF FINISH.
7. ALL CONSTRUCTION TO BE FIRE-RATED PER THE PROJECT DATA ON THE G0.00 SHEETS AND ASSEMBLIES, SHEETS A9.01. UNIT DEMISING WALLS ARE 1-HR RATED, TYPICAL. FOR DETAILED LOCATION OF WALL ASSEMBLY TYPES, SEE ENLARGED PLANS.
8. ALL STAIR, ELEVATOR, TRASH CHUTE, AND VENTILATION SHAFTS TO BE 2-HR FIRE RATED BARRIERS IF CONNECTING MORE THAN 3 STORIES. IF LESS THAN 3 STORIES, THESE MUST BE 1-HR FIRE-RATED CONSTRUCTION.
9. FOR DETAIL LOCATION OF WALL ASSEMBLY TYPES, SEE BUILDING AND UNIT FLOOR PLANS, SHEETS A2 SERIES, A4 SERIES, & A8 SERIES, FOR WALL, FLOOR/CEILING, AND ROOF/CEILING ASSEMBLY TYPES, SEE SHEETS A9.05.
10. WHERE PROVIDED, CMU PARTITION WALLS TO RECEIVE REINFORCING PER STRUCTURAL DRAWINGS AND TERMINATE AT STRUCTURE ABOVE, U.O.N.
11. ALL INTERIOR EXPOSED CONCRETE WITHIN PUBLIC SPACES IS ARCHITECTURAL FINISH, U.O.N.
12. STUD SIZES TYPICALLY USED THROUGHOUT PROJECT ARE SHOWN – REFER TO STUD SIZE ON WALL ASSEMBLIES, SHEET A9.01, FOR REQUIRED SIZES, GAUGES AND SPACING REQUIRED. COORDINATE BLOCKING AND BRACING REQURIEMENTS FOR ALL WALL-HUNT ITEMS AND VERIFY LOCATIONS PRIOR TO INSTALLATION OF FINISHES.
13. THIS BUILDING TO BE FIRE SPRINKLERED PER APPLICABLE SECTIONS OF CBC CHAPTER 9 AND NFPA 13.
14. CLASS 1 STANDPIPES TO BE INTERCONNECTED.
15. PROVIDE ALL NECESSARY WALL ACCESS PANELS AS REQUIRED FOR MECHANICAL, PLUMBING, FIRE SPRINKLER AND ELECTRICAL SYSTEMS. IN FIRE RATED ASSEMBLIES PROVIDE RATED ACCESS PANELS WITH SELF CLOSING DEVICES.
16. SEE INDIVIDUAL UNIT FLOOR PLANS OR ENLARGED BUILDING PLANS FOR DETAILED INFORMATION ON DIMENSIONS, CONSTRUCTION, DOORS, WINDOWS, AND OTHER ELEMENTS, TYPICAL.
17. INTERIOR FINISHES SHALL COMPLY WITH CBC 803.1 FLAME SPREAD PROVISION, SEE INTERIOR DRAWINGS.
18. FOR DOOR & WINDOW SCHEDULES SEE SHEET A9.10, A9.11 & A9.20.
19. RAMP SLOPES ARE MEASURED FROM CENTERLINE OF RAMP.
20. ALL EXIT STAIRS TO COMPLY WITH CBC CHAPTERS 10 AND 11B. EXIT STAIRS AND LANDINGS TO BE 44 INCHES MINIMUM IN WIDTH, STAIR RISERS TO BE MAXIMUM 7 INCHES HIGH, AND TREADS TO BE 11 INCHES MINIMUM DEEP.
21. SEE ROOF PLAN GENERAL NOTES FOR DRAINAGE, VENTILATION, AND ROOF ACCESS NOTES.
22. ALL RESIDENTIAL UNITS THAT FACE ROADS ARE EQUIPPED WITH EITHER MECHANICAL VENTILATION OR PASSIVE FRESH-AIR INLETS, SEE MECHANICAL DRAWINGS FOR MORE INFORMATION.
23. SEE SIGNAGE PLANS AND DETAILS ON A10.30 FOR ADDITIONAL INFORMATION REGARDING SIGNS AT UNIT ENTRIES, ELEVATORS, STAIRS, EGRESS COMPONENTS, COMMON AREA DOORS.

KEYNOTE LEGEND	
#	KEYNOTE
03 6301	CONCRETE BREEZE BLOCK, PAINTED TO MATCH ADJACENT CEMENT PLASTER
21-11A	FIRE DEPARTMENT CONNECTION

LEVEL 1 (1)
1/8" = 1'-0"

SCALE: 1/8" = 1'-0"

PYATOK
1611 TELEGRAPH AVE.
SUITE 200
OAKLAND, CA 94612
T. 510.465.7010 | F. 510.465.8575
www.pyatok.com

THE UNITY COUNCIL
1900 FRUITVALE AVE
#2A
OAKLAND, CA 94601

2700 INTERNATIONAL

OAKLAND, CA 94601

STAMP:

PETER WALLER
C-23564
REGISTERED
4/30/2023
LICENSED ARCHITECT
STATE OF CALIFORNIA

ISSUE SCHEDULE

100 SD	5/11/22
50 DD	7/15/22
100 DD	9/16/22
50 CD	11/18/22
PERMIT SET	12/09/22

REVISION SCHEDULE

NO.	ISSUE	DATE

JOB NUMBER:	1937
DRAWN BY:	MA, DV, TN, MO, SP
CHECKED BY:	Checker
ISSUE DATE:	12/09/22
SCALE:	1/8" = 1'-0"

TITLE:

BUILDING PLANS - LEVEL 1

SHEET:

A2.01

PRELIMINARY - Not for Construction -

© 2019 PYATOK ARCHITECTURE & URBAN DESIGN

12/8/2022 6:03:44 PM

FLOOR PLAN GENERAL NOTES

1. SEE SHEET G0.00 FOR SYMBOLS & ABBREVIATIONS
2. THESE PLANS SHOW UNIQUE INFORMATION ONLY. SEE ENLARGED PLANS FOR INFORMATION NOT SHOWN.
3. REFERENCE ACCESSIBILITY CODE SHEETS G0.31 - G0.37 FOR ALL ACCESSIBILITY STANDARDS, REQUIREMENTS AND DIAGRAMS.
4. SEE CIVIL PLANS FOR THE BUILDING LOCATION ON SITE AND PRECISE GRADING PLANS.
5. FOR PARKING TABULATION REFER TO SHEET G0.00.
6. ALL DIMENSIONS ARE TO FACE OF MASONRY, CONCRETE, STUD, OR CENTERLINE OF COLUMN OR DEMISING WALL (C.L.). U.O.N. ALL "CLEAR" DIMENSIONS ARE TO FACE OF FINISH.
7. ALL CONSTRUCTION TO BE FIRE-RATED PER THE PROJECT DATA ON THE G0.00 SHEETS AND ASSEMBLIES, SHEETS A9.01. UNIT DEMISING WALLS ARE 1-HR RATED, TYPICAL. FOR DETAILED LOCATION OF WALL ASSEMBLY TYPES, SEE ENLARGED PLANS.
8. ALL STAIR, ELEVATOR, TRASH CHUTE, AND VENTILATION SHAFTS TO BE 2-HR FIRE RATED BARRIERS IF CONNECTING MORE THAN 3 STORIES. IF LESS THAN 3 STORIES, THESE MUST BE 1-HR FIRE-RATED CONSTRUCTION.
9. FOR DETAIL LOCATION OF WALL ASSEMBLY TYPES, SEE BUILDING AND UNIT FLOOR PLANS, SHEETS A2 SERIES, A4 SERIES, & A8 SERIES, FOR WALL, FLOOR/CEILING, AND ROOF/CEILING ASSEMBLY TYPES, SEE SHEETS A9.05.
10. WHERE PROVIDED, CMU PARTITION WALLS TO RECEIVE REINFORCING PER STRUCTURAL DRAWINGS AND TERMINATE AT STRUCTURE ABOVE, U.O.N.
11. ALL INTERIOR EXPOSED CONCRETE WITHIN PUBLIC SPACES IS ARCHITECTURAL FINISH, U.O.N.
12. STUD SIZES TYPICALLY USED THROUGHOUT PROJECT ARE SHOWN – REFER TO STUD SIZE ON WALL ASSEMBLIES, SHEET A9.01, FOR REQUIRED SIZES, GAUGES AND SPACING REQUIRED. COORDINATE BLOCKING AND BRACING REQURIEMENTS FOR ALL WALL-HUNT ITEMS AND VERIFY LOCATIONS PRIOR TO INSTALLATION OF FINISHES.
13. THIS BUILDING TO BE FIRE SPRINKLERED PER APPLICABLE SECTIONS OF CBC CHAPTER 9 AND NFPA 13.
14. CLASS 1 STANDPIPES TO BE INTERCONNECTED.
15. PROVIDE ALL NECESSARY WALL ACCESS PANELS AS REQUIRED FOR MECHANICAL, PLUMBING, FIRE SPRINKLER AND ELECTRICAL SYSTEMS. IN FIRE RATED ASSEMBLIES PROVIDE RATED ACCESS PANELS WITH SELF CLOSING DEVICES.
16. SEE INDIVIDUAL UNIT FLOOR PLANS OR ENLARGED BUILDING PLANS FOR DETAILED INFORMATION ON DIMENSIONS, CONSTRUCTION, DOORS, WINDOWS, AND OTHER ELEMENTS, TYPICAL.
17. INTERIOR FINISHES SHALL COMPLY WITH CBC 803.1 FLAME SPREAD PROVISION, SEE INTERIOR DRAWINGS.
18. FOR DOOR & WINDOW SCHEDULES SEE SHEET A9.10, A9.11 & A9.20.
19. RAMP SLOPES ARE MEASURED FROM CENTERLINE OF RAMP.
20. ALL EXIT STAIRS TO COMPLY WITH CBC CHAPTERS 10 AND 11B. EXIT STAIRS AND LANDINGS TO BE 44 INCHES MINIMUM IN WIDTH, STAIR RISERS TO BE MAXIMUM 7 INCHES HIGH, AND TREADS TO BE 11 INCHES MINIMUM DEEP.
21. SEE ROOF PLAN GENERAL NOTES FOR DRAINAGE, VENTILATION, AND ROOF ACCESS NOTES.
22. ALL RESIDENTIAL UNITS THAT FACE ROADS ARE EQUIPPED WITH EITHER MECHANICAL VENTILATION OR PASSIVE FRESH-AIR INLETS, SEE MECHANICAL DRAWINGS FOR MORE INFORMATION.
23. SEE SIGNAGE PLANS AND DETAILS ON A10.30 FOR ADDITIONAL INFORMATION REGARDING SIGNS AT UNIT ENTRIES, ELEVATORS, STAIRS, EGRESS COMPONENTS, COMMON AREA DOORS.

KEYNOTE LEGEND	
#	KEYNOTE
10-14A	HANGING SIGN

LEVEL 2
1/8" = 1'-0"

0' 4' 8' 16' 32'

SCALE: 1/8" = 1'-0"

12/8/2022 6:03:51 PM

PYATOK
1611 TELEGRAPH AVE.
SUITE 200
OAKLAND, CA 94612
T. 510.465.7010 | F. 510.465.8575
www.pyatok.com

THE UNITY COUNCIL
1900 FRUITVALE AVE
#2A
OAKLAND, CA 94601

2700 INTERNATIONAL
OAKLAND, CA 94601

STAMP:
PETER WALLER
C-23554
REGISTERED ARCHITECT
STATE OF CALIFORNIA
4/30/2023

ISSUE SCHEDULE

100 SD	5/11/22
50 DD	7/15/22
100 DD	9/16/22
50 CD	11/18/22
PERMIT SET	12/09/22

REVISION SCHEDULE

NO.	ISSUE	DATE

JOB NUMBER:	1937
DRAWN BY:	MA, DV, TN, MO, SP
CHECKED BY:	Checker
ISSUE DATE:	12/09/22
SCALE:	1/8" = 1'-0"

TITLE:
BUILDING PLANS - LEVEL 2

SHEET:
A2.02

PRELIMINARY - Not for Construction -

© 2019 PYATOK ARCHITECTURE & URBAN DESIGN

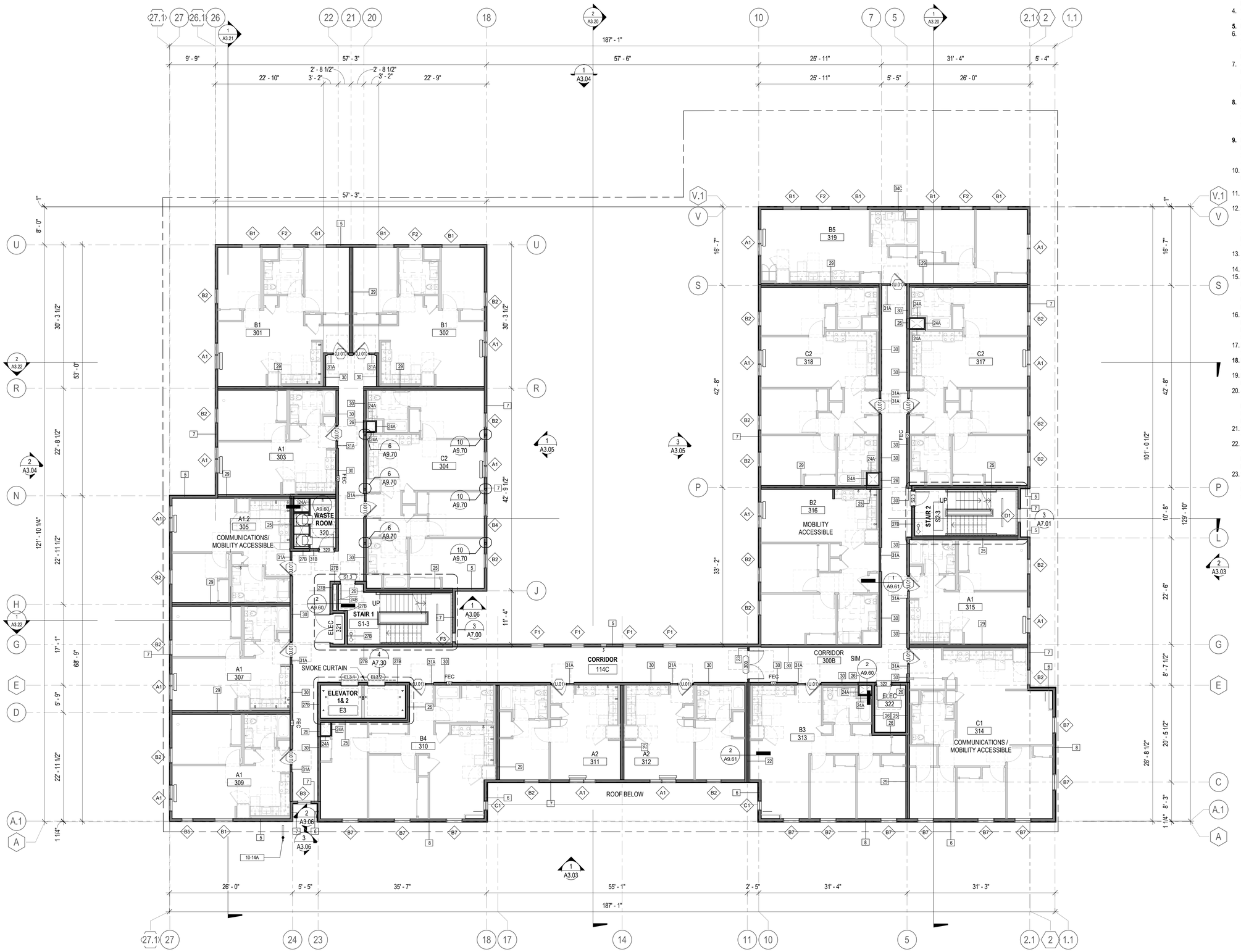

LEVEL 3 (1)
1/8" = 1'-0"

0' 4' 8' 16' 32'

SCALE: 1/8" = 1'-0"

FLOOR PLAN GENERAL NOTES

1. SEE SHEET G0.00 FOR SYMBOLS & ABBREVIATIONS
2. THESE PLANS SHOW UNIQUE INFORMATION ONLY. SEE ENLARGED PLANS FOR INFORMATION NOT SHOWN.
3. REFERENCE ACCESSIBILITY CODE SHEETS G0.31 - G0.37 FOR ALL ACCESSIBILITY STANDARDS, REQUIREMENTS AND DIAGRAMS.
4. SEE CIVIL PLANS FOR THE BUILDING LOCATION ON SITE AND PRECISE GRADING PLANS.
5. FOR PARKING TABULATION REFER TO SHEET G0.00.
6. ALL DIMENSIONS ARE TO FACE OF MASONRY, CONCRETE, STUD, OR CENTERLINE OF COLUMN OR DEMISING WALL (C.L.). U.O.N. ALL "CLEAR" DIMENSIONS ARE TO FACE OF FINISH.
7. ALL CONSTRUCTION TO BE FIRE-RATED PER THE PROJECT DATA ON THE G0.00 SHEETS AND ASSEMBLIES, SHEETS A9.01. UNIT DEMISING WALLS ARE 1-HR RATED, TYPICAL. FOR DETAILED LOCATION OF WALL ASSEMBLY TYPES, SEE ENLARGED PLANS.
8. ALL STAIR, ELEVATOR, TRASH CHUTE, AND VENTILATION SHAFTS TO BE 2-HR FIRE RATED BARRIERS IF CONNECTING MORE THAN 3 STORIES. IF LESS THAN 3 STORIES, THESE MUST BE 1-HR FIRE-RATED CONSTRUCTION.
9. FOR DETAIL LOCATION OF WALL ASSEMBLY TYPES, SEE BUILDING AND UNIT FLOOR PLANS, SHEETS A2 SERIES, A4 SERIES, & A8 SERIES, FOR WALL, FLOOR, FLOOR/CEILING, AND ROOF/CEILING ASSEMBLY TYPES, SEE SHEETS A9.05.
10. WHERE PROVIDED, CMU PARTITION WALLS TO RECEIVE REINFORCING PER STRUCTURAL DRAWINGS AND TERMINATE AT STRUCTURE ABOVE, U.O.N.
11. ALL INTERIOR EXPOSED CONCRETE WITHIN PUBLIC SPACES IS ARCHITECTURAL FINISH, U.O.N.
12. STUD SIZES TYPICALLY USED THROUGHOUT PROJECT ARE SHOWN – REFER TO STUD SIZE ON WALL ASSEMBLIES, SHEET A9.01, FOR REQUIRED SIZES, GAUGES AND SPACING REQUIRED. COORDINATE BLOCKING AND BRACING REQURIEMENTS FOR ALL WALL-HUNT ITEMS AND VERIFY LOCATIONS PRIOR TO INSTALLATION OF FINISHES.
13. THIS BUILDING TO BE FIRE SPRINKLERED PER APPLICABLE SECTIONS OF CBC CHAPTER 9 AND NFPA 13.
14. CLASS 1 STANDPIPES TO BE INTERCONNECTED.
15. PROVIDE ALL NECESSARY WALL ACCESS PANELS AS REQUIRED FOR MECHANICAL, PLUMBING, FIRE SPRINKLER AND ELECTRICAL SYSTEMS. IN FIRE RATED ASSEMBLIES PROVIDE RATED ACCESS PANELS WITH SELF CLOSING DEVICES.
16. SEE INDIVIDUAL UNIT FLOOR PLANS OR ENLARGED BUILDING PLANS FOR DETAILED INFORMATION ON DIMENSIONS, CONSTRUCTION, DOORS, WINDOWS, AND OTHER ELEMENTS, TYPICAL.
17. INTERIOR FINISHES SHALL COMPLY WITH CBC 803.1 FLAME SPREAD PROVISION, SEE INTERIOR DRAWINGS.
18. FOR DOOR & WINDOW SCHEDULES SEE SHEET A9.10, A9.11 & A9.20.
19. RAMP SLOPES ARE MEASURED FROM CENTERLINE OF RAMP.
20. ALL EXIT STAIRS TO COMPLY WITH CBC CHAPTERS 10 AND 11B. EXIT STAIRS AND LANDINGS TO BE 44 INCHES MINIMUM IN WIDTH, STAIR RISERS TO BE MAXIMUM 7 INCHES HIGH, AND TREADS TO BE 11 INCHES MINIMUM DEEP.
21. SEE ROOF PLAN GENERAL NOTES FOR DRAINAGE, VENTILATION, AND ROOF ACCESS NOTES.
22. ALL RESIDENTIAL UNITS THAT FACE ROADS ARE EQUIPPED WITH EITHER MECHANICAL VENTILATION OR PASSIVE FRESH-AIR INLETS, SEE MECHANICAL DRAWINGS FOR MORE INFORMATION.
23. SEE SIGNAGE PLANS AND DETAILS ON A10.30 FOR ADDITIONAL INFORMATION REGARDING SIGNS AT UNIT ENTRIES, ELEVATORS, STAIRS, EGRESS COMPONENTS, COMMON AREA DOORS.

KEYNOTE LEGEND	
#	KEYNOTE
10-14A	HANGING SIGN

PYATOK
1611 TELEGRAPH AVE.
SUITE 200
OAKLAND, CA 94612
T. 510.465.7010 | F. 510.465.8575
www.pyatok.com

THE UNITY COUNCIL
1900 FRUITVALE AVE
#2A
OAKLAND, CA 94601

2700 INTERNATIONAL
OAKLAND, CA 94601

STAMP:
LICENSED ARCHITECT
PETER WALLER
C-23554
REN: 08/31/2023
STATE OF CALIFORNIA

ISSUE SCHEDULE

100 SD	5/11/22
50 DD	7/15/22
100 DD	9/16/22
50 CD	11/18/22
PERMIT SET	12/09/22

REVISION SCHEDULE

NO.	ISSUE	DATE

JOB NUMBER:	1937
DRAWN BY:	MA, DV, TN, MO, SP
CHECKED BY:	Checker
ISSUE DATE:	12/09/22
SCALE:	1/8" = 1'-0"

TITLE:
BUILDING PLANS - LEVEL 3

SHEET:
A2.03

PRELIMINARY - Not for Construction -

© 2019 PYATOK ARCHITECTURE & URBAN DESIGN

12/8/2022 6:03:59 PM

FLOOR PLAN GENERAL NOTES

1. SEE SHEET G0.00 FOR SYMBOLS & ABBREVIATIONS
2. THESE PLANS SHOW UNIQUE INFORMATION ONLY. SEE ENLARGED PLANS FOR INFORMATION NOT SHOWN.
3. REFERENCE ACCESSIBILITY CODE SHEETS G0.31 - G0.37 FOR ALL ACCESSIBILITY STANDARDS, REQUIREMENTS AND DIAGRAMS.
4. SEE CIVIL PLANS FOR THE BUILDING LOCATION ON SITE AND PRECISE GRADING PLANS.
5. FOR PARKING TABULATION REFER TO SHEET G0.00.
6. ALL DIMENSIONS ARE TO FACE OF MASONRY, CONCRETE, STUD, OR CENTERLINE OF COLUMN OR DEMISING WALL (C.L.). U.O.N. ALL "CLEAR" DIMENSIONS ARE TO FACE OF FINISH.
7. ALL CONSTRUCTION TO BE FIRE-RATED PER THE PROJECT DATA ON THE G0.00 SHEETS AND ASSEMBLIES, SHEETS A9.01. UNIT DEMISING WALLS ARE 1-HR RATED, TYPICAL. FOR DETAILED LOCATION OF WALL ASSEMBLY TYPES, SEE ENLARGED PLANS.
8. ALL STAIR, ELEVATOR, TRASH CHUTE, AND VENTILATION SHAFTS TO BE 2-HR FIRE RATED BARRIERS IF CONNECTING MORE THAN 3 STORIES. IF LESS THAN 3 STORIES, THESE MUST BE 1-HR FIRE-RATED CONSTRUCTION.
9. FOR DETAIL LOCATION OF WALL ASSEMBLY TYPES, SEE BUILDING AND UNIT FLOOR PLANS, SHEETS A2 SERIES, A4 SERIES, & A8 SERIES, FOR WALL, FLOOR, FLOOR/CEILING, AND ROOF/CEILING ASSEMBLY TYPES, SEE SHEETS A9.05.
10. WHERE PROVIDED, CMU PARTITION WALLS TO RECEIVE REINFORCING PER STRUCTURAL DRAWINGS AND TERMINATE AT STRUCTURE ABOVE, U.O.N.
11. ALL INTERIOR EXPOSED CONCRETE WITHIN PUBLIC SPACES IS ARCHITECTURAL FINISH, U.O.N.
12. STUD SIZES TYPICALLY USED THROUGHOUT PROJECT ARE SHOWN – REFER TO STUD SIZE ON WALL ASSEMBLIES, SHEET A9.01, FOR REQUIRED SIZES, GAUGES AND SPACING REQUIRED. COORDINATE BLOCKING AND BRACING REQURIEMENTS FOR ALL WALL-HUNT ITEMS AND VERIFY LOCATIONS PRIOR TO INSTALLATION OF FINISHES.
13. THIS BUILDING TO BE FIRE SPRINKLERED PER APPLICABLE SECTIONS OF CBC CHAPTER 9 AND NFPA 13.
14. CLASS 1 STANDPIPES TO BE INTERCONNECTED.
15. PROVIDE ALL NECESSARY WALL ACCESS PANELS AS REQUIRED FOR MECHANICAL, PLUMBING, FIRE SPRINKLER AND ELECTRICAL SYSTEMS. IN FIRE RATED ASSEMBLIES PROVIDE RATED ACCESS PANELS WITH SELF CLOSING DEVICES.
16. SEE INDIVIDUAL UNIT FLOOR PLANS OR ENLARGED BUILDING PLANS FOR DETAILED INFORMATION ON DIMENSIONS, CONSTRUCTION, DOORS, WINDOWS, AND OTHER ELEMENTS, TYPICAL.
17. INTERIOR FINISHES SHALL COMPLY WITH CBC 803.1 FLAME SPREAD PROVISION, SEE INTERIOR DRAWINGS.
18. FOR DOOR & WINDOW SCHEDULES SEE SHEET A9.10, A9.11 & A9.20.
19. RAMP SLOPES ARE MEASURED FROM CENTERLINE OF RAMP.
20. ALL EXIT STAIRS TO COMPLY WITH CBC CHAPTERS 10 AND 11B. EXIT STAIRS AND LANDINGS TO BE 44 INCHES MINIMUM IN WIDTH, STAIR RISERS TO BE MAXIMUM 7 INCHES HIGH, AND TREADS TO BE 11 INCHES MINIMUM DEEP.
21. SEE ROOF PLAN GENERAL NOTES FOR DRAINAGE, VENTILATION, AND ROOF ACCESS NOTES.
22. ALL RESIDENTIAL UNITS THAT FACE ROADS ARE EQUIPPED WITH EITHER MECHANICAL VENTILATION OR PASSIVE FRESH-AIR INLETS, SEE MECHANICAL DRAWINGS FOR MORE INFORMATION.
23. SEE SIGNAGE PLANS AND DETAILS ON A10.30 FOR ADDITIONAL INFORMATION REGARDING SIGNS AT UNIT ENTRIES, ELEVATORS, STAIRS, EGRESS COMPONENTS, COMMON AREA DOORS.

KEYNOTE LEGEND	
#	KEYNOTE
22-14B	ROOF DRAIN W/ OVERFLOW, S.P.D.

LEVEL 4 (1)
1/8" = 1'-0"

0' 4' 8' 16' 32'
SCALE: 1/8" = 1'-0"

12/8/2022 6:04:05 PM

PYATOK
1611 TELEGRAPH AVE.
SUITE 200
OAKLAND, CA 94612
T. 510.465.7010 | F. 510.465.8575
www.pyatok.com

THE UNITY COUNCIL
1900 FRUITVALE AVE
#2A
OAKLAND, CA 94601

2700 INTERNATIONAL
OAKLAND, CA 94601

STAMP:
PETER WALLER
C-23554
4/30/2023
LICENSED ARCHITECT
STATE OF CALIFORNIA

ISSUE SCHEDULE

100 SD	5/11/22
50 DD	7/15/22
100 DD	9/16/22
50 CD	11/18/22
PERMIT SET	12/09/22

REVISION SCHEDULE

NO.	ISSUE	DATE

JOB NUMBER:	1937
DRAWN BY:	MA, DV, TN, MO, SP
CHECKED BY:	Checker
ISSUE DATE:	12/09/22
SCALE:	1/8" = 1'-0"

TITLE:
BUILDING PLANS - LEVEL 4

SHEET:
A2.04

PRELIMINARY - Not for Construction -

© 2019 PYATOK ARCHITECTURE & URBAN DESIGN

LEVEL 5 (1)
1/8" = 1'-0"

0' 4' 8' 16' 32'
SCALE: 1/8" = 1'-0"

FLOOR PLAN GENERAL NOTES

1. SEE SHEET G0.00 FOR SYMBOLS & ABBREVIATIONS
2. THESE PLANS SHOW UNIQUE INFORMATION ONLY. SEE ENLARGED PLANS FOR INFORMATION NOT SHOWN.
3. REFERENCE ACCESSIBILITY CODE SHEETS G0.31 - G0.37 FOR ALL ACCESSIBILITY STANDARDS, REQUIREMENTS AND DIAGRAMS.
4. SEE CIVIL PLANS FOR THE BUILDING LOCATION ON SITE AND PRECISE GRADING PLANS.
5. FOR PARKING TABULATION REFER TO SHEET G0.00.
6. ALL DIMENSIONS ARE TO FACE OF MASONRY, CONCRETE, STUD, OR CENTERLINE OF COLUMN OR DEMISING WALL (C.L.). U.O.N. ALL "CLEAR" DIMENSIONS ARE TO FACE OF FINISH.
7. ALL CONSTRUCTION TO BE FIRE-RATED PER THE PROJECT DATA ON THE G0.00 SHEETS AND ASSEMBLIES, SHEETS A9.01. UNIT DEMISING WALLS ARE 1-HR RATED, TYPICAL. FOR DETAILED LOCATION OF WALL ASSEMBLY TYPES, SEE ENLARGED PLANS.
8. ALL STAIR, ELEVATOR, TRASH CHUTE, AND VENTILATION SHAFTS TO BE 2-HR FIRE RATED BARRIERS IF CONNECTING MORE THAN 3 STORIES. IF LESS THAN 3 STORIES, THESE MUST BE 1-HR FIRE-RATED CONSTRUCTION.
9. FOR DETAIL LOCATION OF WALL ASSEMBLY TYPES, SEE BUILDING AND UNIT FLOOR PLANS, SHEETS A2 SERIES, A4 SERIES, & A8 SERIES, FOR WALL, FLOOR, FLOOR/CEILING, AND ROOF/CEILING ASSEMBLY TYPES, SEE SHEETS A9.05.
10. WHERE PROVIDED, CMU PARTITION WALLS TO RECEIVE REINFORCING PER STRUCTURAL DRAWINGS AND TERMINATE AT STRUCTURE ABOVE, U.O.N.
11. ALL INTERIOR EXPOSED CONCRETE WITHIN PUBLIC SPACES IS ARCHITECTURAL FINISH, U.O.N.
12. STUD SIZES TYPICALLY USED THROUGHOUT PROJECT ARE SHOWN – REFER TO STUD SIZE ON WALL ASSEMBLIES, SHEET A9.01, FOR REQUIRED SIZES, GAUGES AND SPACING REQUIRED. COORDINATE BLOCKING AND BRACING REQURIEMENTS FOR ALL WALL-HUNT ITEMS AND VERIFY LOCATIONS PRIOR TO INSTALLATION OF FINISHES.
13. THIS BUILDING TO BE FIRE SPRINKLERED PER APPLICABLE SECTIONS OF CBC CHAPTER 9 AND NFPA 13.
14. CLASS 1 STANDPIPES TO BE INTERCONNECTED.
15. PROVIDE ALL NECESSARY WALL ACCESS PANELS AS REQUIRED FOR MECHANICAL, PLUMBING, FIRE SPRINKLER AND ELECTRICAL SYSTEMS. IN FIRE RATED ASSEMBLIES PROVIDE RATED ACCESS PANELS WITH SELF CLOSING DEVICES.
16. SEE INDIVIDUAL UNIT FLOOR PLANS OR ENLARGED BUILDING PLANS FOR DETAILED INFORMATION ON DIMENSIONS, CONSTRUCTION, DOORS, WINDOWS, AND OTHER ELEMENTS, TYPICAL.
17. INTERIOR FINISHES SHALL COMPLY WITH CBC 803.1 FLAME SPREAD PROVISION, SEE INTERIOR DRAWINGS.
18. FOR DOOR & WINDOW SCHEDULES SEE SHEET A9.10, A9.11 & A9.20.
19. RAMP SLOPES ARE MEASURED FROM CENTERLINE OF RAMP.
20. ALL EXIT STAIRS TO COMPLY WITH CBC CHAPTERS 10 AND 11B. EXIT STAIRS AND LANDINGS TO BE 44 INCHES MINIMUM IN WIDTH, STAIR RISERS TO BE MAXIMUM 7 INCHES HIGH, AND TREADS TO BE 11 INCHES MINIMUM DEEP.
21. SEE ROOF PLAN GENERAL NOTES FOR DRAINAGE, VENTILATION, AND ROOF ACCESS NOTES.
22. ALL RESIDENTIAL UNITS THAT FACE ROADS ARE EQUIPPED WITH EITHER MECHANICAL VENTILATION OR PASSIVE FRESH-AIR INLETS, SEE MECHANICAL DRAWINGS FOR MORE INFORMATION.
23. SEE SIGNAGE PLANS AND DETAILS ON A10.30 FOR ADDITIONAL INFORMATION REGARDING SIGNS AT UNIT ENTRIES, ELEVATORS, STAIRS, EGRESS COMPONENTS, COMMON AREA DOORS.

KEYNOTE LEGEND	
#	KEYNOTE
22-14B	ROOF DRAIN W/ OVERFLOW, S.P.D.

PYATOK
1611 TELEGRAPH AVE.
SUITE 200
OAKLAND, CA 94612
T. 510.465.7010 | F. 510.465.8575
www.pyatok.com

THE UNITY COUNCIL
1900 FRUITVALE AVE
#2A
OAKLAND, CA 94601

2700 INTERNATIONAL
OAKLAND, CA 94601

STAMP:
PETER WALLER
C-23551
4/30/2023

ISSUE SCHEDULE

100 SD	5/11/22
50 DD	7/15/22
100 DD	9/16/22
50 CD	11/18/22
PERMIT SET	12/09/22

REVISION SCHEDULE

NO.	ISSUE	DATE

JOB NUMBER:	1937
DRAWN BY:	MA, DV, TN, MO, SP
CHECKED BY:	Checker
ISSUE DATE:	12/09/22
SCALE:	1/8" = 1'-0"

TITLE:
BUILDING PLANS - LEVEL 5

SHEET:
A2.05

PRELIMINARY - Not for Construction -

© 2019 PYATOK ARCHITECTURE & URBAN DESIGN

12/8/2022 6:04:12 PM

FLOOR PLAN GENERAL NOTES

1. SEE SHEET G0.00 FOR SYMBOLS & ABBREVIATIONS
2. THESE PLANS SHOW UNIQUE INFORMATION ONLY. SEE ENLARGED PLANS FOR INFORMATION NOT SHOWN.
3. REFERENCE ACCESSIBILITY CODE SHEETS G0.31 - G0.37 FOR ALL ACCESSIBILITY STANDARDS, REQUIREMENTS AND DIAGRAMS.
4. SEE CIVIL PLANS FOR THE BUILDING LOCATION ON SITE AND PRECISE GRADING PLANS.
5. FOR PARKING TABULATION REFER TO SHEET G0.00.
6. ALL DIMENSIONS ARE TO FACE OF MASONRY, CONCRETE, STUD, OR CENTERLINE OF COLUMN OR DEMISING WALL (C.L.). U.O.N. ALL "CLEAR" DIMENSIONS ARE TO FACE OF FINISH.
7. ALL CONSTRUCTION TO BE FIRE-RATED PER THE PROJECT DATA ON THE G0.00 SHEETS AND ASSEMBLIES, SHEETS A9.01. UNIT DEMISING WALLS ARE 1-HR RATED, TYPICAL. FOR DETAILED LOCATION OF WALL ASSEMBLY TYPES, SEE ENLARGED PLANS.
8. ALL STAIR, ELEVATOR, TRASH CHUTE, AND VENTILATION SHAFTS TO BE 2-HR FIRE RATED BARRIERS IF CONNECTING MORE THAN 3 STORIES. IF LESS THAN 3 STORIES, THESE MUST BE 1-HR FIRE-RATED CONSTRUCTION.
9. FOR DETAIL LOCATION OF WALL ASSEMBLY TYPES, SEE BUILDING AND UNIT FLOOR PLANS, SHEETS A2 SERIES, A4 SERIES, & A8 SERIES, FOR WALL, FLOOR, FLOOR/CEILING, AND ROOF/CEILING ASSEMBLY TYPES, SEE SHEETS A9.05.
10. WHERE PROVIDED, CMU PARTITION WALLS TO RECEIVE REINFORCING PER STRUCTURAL DRAWINGS AND TERMINATE AT STRUCTURE ABOVE, U.O.N.
11. ALL INTERIOR EXPOSED CONCRETE WITHIN PUBLIC SPACES IS ARCHITECTURAL FINISH, U.O.N.
12. STUD SIZES TYPICALLY USED THROUGHOUT PROJECT ARE SHOWN – REFER TO STUD SIZE ON WALL ASSEMBLIES, SHEET A9.01, FOR REQUIRED SIZES, GAUGES AND SPACING REQUIRED. COORDINATE BLOCKING AND BRACING REQURIEMENTS FOR ALL WALL-HUNT ITEMS AND VERIFY LOCATIONS PRIOR TO INSTALLATION OF FINISHES.
13. THIS BUILDING TO BE FIRE SPRINKLERED PER APPLICABLE SECTIONS OF CBC CHAPTER 9 AND NFPA 13.
14. CLASS 1 STANDPIPES TO BE INTERCONNECTED.
15. PROVIDE ALL NECESSARY WALL ACCESS PANELS AS REQUIRED FOR MECHANICAL, PLUMBING, FIRE SPRINKLER AND ELECTRICAL SYSTEMS. IN FIRE RATED ASSEMBLIES PROVIDE RATED ACCESS PANELS WITH SELF CLOSING DEVICES.
16. SEE INDIVIDUAL UNIT FLOOR PLANS OR ENLARGED BUILDING PLANS FOR DETAILED INFORMATION ON DIMENSIONS, CONSTRUCTION, DOORS, WINDOWS, AND OTHER ELEMENTS, TYPICAL.
17. INTERIOR FINISHES SHALL COMPLY WITH CBC 803.1 FLAME SPREAD PROVISION, SEE INTERIOR DRAWINGS.
18. FOR DOOR & WINDOW SCHEDULES SEE SHEET A9.10, A9.11 & A9.20.
19. RAMP SLOPES ARE MEASURED FROM CENTERLINE OF RAMP.
20. ALL EXIT STAIRS TO COMPLY WITH CBC CHAPTERS 10 AND 11B. EXIT STAIRS AND LANDINGS TO BE 44 INCHES MINIMUM IN WIDTH, STAIR RISERS TO BE MAXIMUM 7 INCHES HIGH, AND TREADS TO BE 11 INCHES MINIMUM DEEP.
21. SEE ROOF PLAN GENERAL NOTES FOR DRAINAGE, VENTILATION, AND ROOF ACCESS NOTES.
22. ALL RESIDENTIAL UNITS THAT FACE ROADS ARE EQUIPPED WITH EITHER MECHANICAL VENTILATION OR PASSIVE FRESH-AIR INLETS, SEE MECHANICAL DRAWINGS FOR MORE INFORMATION.
23. SEE SIGNAGE PLANS AND DETAILS ON A10.30 FOR ADDITIONAL INFORMATION REGARDING SIGNS AT UNIT ENTRIES, ELEVATORS, STAIRS, EGRESS COMPONENTS, COMMON AREA DOORS.

PYATOK
1611 TELEGRAPH AVE.
SUITE 200
OAKLAND, CA 94612
T. 510.465.7010 | F. 510.465.8575
www.pyatok.com

THE UNITY COUNCIL
1900 FRUITVALE AVE
#2A
OAKLAND, CA 94601

2700 INTERNATIONAL
OAKLAND, CA 94601

STAMP:

PETER WALLER
C-23554
4/30/2023

ISSUE SCHEDULE

100 SD	5/11/22
50 DD	7/15/22
100 DD	9/16/22
50 CD	11/18/22
PERMIT SET	12/09/22

REVISION SCHEDULE

NO.	ISSUE	DATE

JOB NUMBER:	1937
DRAWN BY:	MA, DV, TN, MO, SP
CHECKED BY:	Checker
ISSUE DATE:	12/09/22
SCALE:	1/8" = 1'-0"

TITLE:
BUILDING PLANS - LEVEL 6

SHEET:
A2.06

PRELIMINARY - Not for Construction -

© 2019 PYATOK ARCHITECTURE & URBAN DESIGN

LEVEL 6 (1)
1/8" = 1'-0"

0' 4' 8' 16' 32'
SCALE: 1/8" = 1'-0"

12/8/2022 6:04:18 PM

ROOF PLAN GENERAL NOTES

1. ROOF DRAWINGS ARE DIAGRAMMATIC AND MAY NOT SHOW ALL PENETRATIONS OF EQUIPMENT. SEE MECHANICAL AND ELECTRICAL DRAWINGS FOR ADDITIONAL INFORMATION.

2. PRIOR TO COMMENCEMENT OF ROOFING WORK, CONTRACTOR SHALL INSPECT ROOF SUBSTRATE AND REPORT ALL DEFECTS OR UNACCEPTABLE CONDITIONS. CONTRACTOR SHALL CONFIRM THAT ALL SURFACES SLOPE AT LEAST 1/8" PER FOOT TO DRAIN LOCATIONS PRIOR TO APPLICATION OF ROOFING MEMBRANES.

3. FLASH ALL ROOF EDGES AND PENETRATIONS PER CURRENT SMACNA MANUAL. FLASH AND SEAL WATER TIGHT ALL FLASHINGS, PENETRATIONS AND MECHANICAL EQUIPMENT MOUNTINGS. PROVIDE COMPLETE WATERTIGHT SYSTEM.

4. PAINT ALL EXPOSED METAL (NOT FACTORY PRE-FINISHED) INCLUDING FLASHING, COPINGS, PIPING, DUCTWORK AND SUPPORT STRUCTURES.

5. PROVIDE CLASS 'A' MINIMUM ROOFING SYSTEMS AT ALL ROOFS.

6. ROOF SLOPES TO BE AS FOLLOWS:
   a. FLAT SLOPE: 3/8" : 1 FT.
   b. HIGH SLOPE: VERIFY PER ROOF PLAN /ELEVATIONS.
   c. LOW SLOPE: VERIFY PER ROOF PLAN /ELEVATIONS.
   d. CRICKETS: 1/4" : 1 FT MIN.
   e. TERRACES, BALCONIES, DECKS: 1/4" : 1 FT.

7. FOR PLATE HEIGHTS, SEE BUILDING SECTIONS AND ELEVATIONS, SHEET SERIES A3.03-3.06 & A3.20-3.22.

11. PROVIDE FIREBLOCKING IN CONCEALED ROOF SPACES PER 2019 CBC 718.2

12. ALL ROOF DRAINAGE SHALL BE TIGHT-LINED TO STORM DRAIN SYSTEM. SEE GROUND FLOOR PLAN FOR DOWNSPOUT TERMINATIONS. SEE CIVIL AND PLUMBING DRAWINGS FOR MORE INFORMATION AND CONNECT TO STORM DRAIN SYSTEM.

13. DOWNSPOUTS AND GUTTERS TO BE DESIGNED PER THE DRAWINGS AS SHOWN AND/OR SHALL BE SUBMITTED AS A 'BIDDER DESIGN / DEFERRED SUBMITTAL' ITEM PER NOTES.

14. SET ALL ROOF EQUIPMENT AND CURBS (FANS, CONDENSORS, MECHANICAL UNITS, ROOF HATCHES, ETC) LEVEL UNLESS NOTED OTHERWISE.

15. ELEVATOR SHAFT HOISTWAY: LOUVERED VENT 18" x 24" DIMENSION. REFER TO 8/A7.30 FOR LOCATION.

ROOF PLAN KEY

2 HOUR RATED ROOF PARAPET

6" APPROX. ELEVATION IN INCHES AS MEASURED FROM THE LOWEST ROOF SURFACE OF EACH ROOF

ROOFING MEMBRANE

KEYNOTE LEGEND	
#	KEYNOTE
05-52B	STEEL OSHA RAILING
07-72A	ROOF HATCH, 48" x 48"
22-14B	ROOF DRAIN W/ OVERFLOW, S.P.D.
22-49	PLUMBING EQUIPMENT TYP., S.P.D.
23 49	MECHANICAL EQUIPMENT TYP., S.M.D.
26-31	PHOTOVOLTAIC PANELS

PLAN - ROOF 1
1/8" = 1'-0"

SCALE: 1/8" = 1'-0"

PYATOK
1611 TELEGRAPH AVE.
SUITE 200
OAKLAND, CA 94612
T. 510.465.7010 | F. 510.465.8575
www.pyatok.com

THE UNITY COUNCIL
1900 FRUITVALE AVE
#2A
OAKLAND, CA 94601

2700 INTERNATIONAL
OAKLAND, CA 94601

STAMP:
PETER WALLER
C-23556
4/30/2023

ISSUE SCHEDULE

100 SD	5/11/22
50 DD	7/15/22
100 DD	9/16/22
50 CD	11/18/22
PERMIT SET	12/09/22

REVISION SCHEDULE

NO.	ISSUE	DATE

JOB NUMBER:	1937
DRAWN BY:	MA, DV, TN, MO, SP
CHECKED BY:	Checker
ISSUE DATE:	12/09/22
SCALE:	As indicated

TITLE:
BUILDING PLANS - ROOF

SHEET:
A2.07

PRELIMINARY - Not for Construction -

© 2019 PYATOK ARCHITECTURE & URBAN DESIGN

12/8/2022 6:04:23 PM

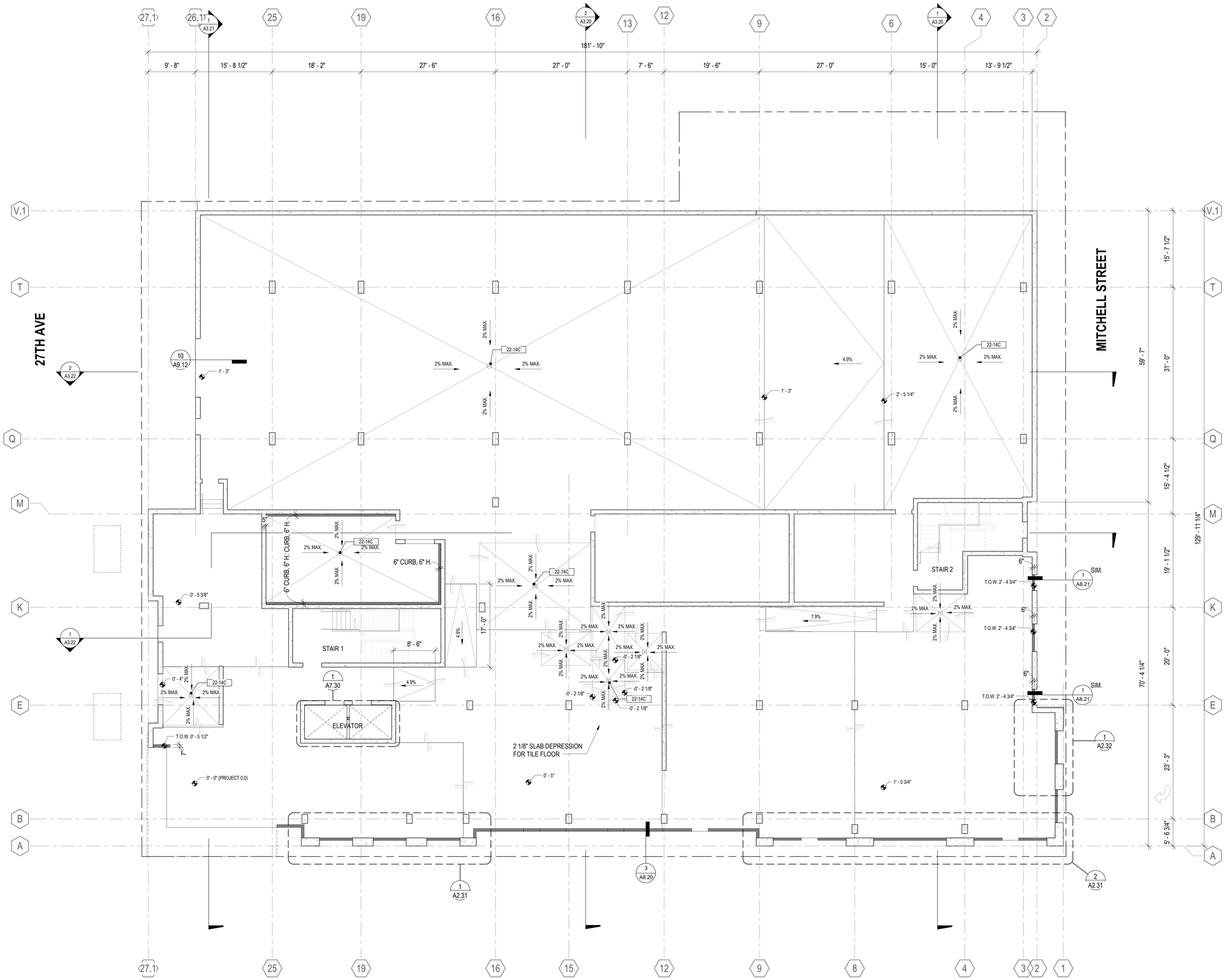

INTERNATIONAL BOULEVARD

SLAB PLAN - LEVEL 1 (1)
1/8" = 1'-0"

0' 4' 8' 16' 32'

SCALE: 1/8" = 1'-0"

SLAB / FOUNDATION PLAN NOTES

1. PROPERTY LINES ARE SHOWN FOR GENERAL INFORMATION PURPOSES ONLY. SEE CIVIL DRAWINGS AND ARCHITECTURAL SITE PLAN FOR SITE LOCATION OF THE BUILDING(S).
2. FOR LANDSCAPE AREAS, RETAINING WALLS, PLANTERS, WALKS, STEPS, FEATURES AND DETAILED SITE INFORMATION, SEE CIVIL AND LANDSCAPE DRAWINGS.
3. ALL DIMENSIONS ARE TO FACE OF MASONRY, CONCRETE, STUD OR CENTERLINE OF COLUMN AND PARTY WALL, TYPICAL, U.O.N.
4. FACE OF CONCRETE TO ALIGN WITH FACE OF STRUCTURAL SHEATHING. FACE OF STUD IS OFFSET ½" FROM FACE OF CONCRETE, TYPICAL, U.O.N.
5. PROVIDE UNDER-FLOOR DECAY AND TERMITE PROTECTION PER CBC REQUIREMENTS.
6. PROVIDE WOOD-EARTH SEPARATION PER CBC REQUIREMENTS.
7. CONTRACTOR TO CONFIRM, WITH ALL TRADES, PRIOR TO POURING SLAB, PLACEMENT AND COMPLETENESS OF HARDWARE, SLEEVES, UTILITIES, ETC. INTO OR THROUGH STRUCTURAL CONCRETE DECK. FOR ADDITIONAL INFORMATION REFER TO MECHANICAL, ELECTRICAL, PLUMBING, STRUCTURAL AND CIVIL DRAWINGS.
8. ALL BLOCKOUT DIMENSIONS ARE APPROXIMATE; CONTRACTOR TO VERIFY SIZE AND LOCATIONS OF ALL SLAB AND WALL OPENINGS, PENETRATIONS, AND EMBEDMENT PRIOR TO PLACEMENT OF CONCRETE. ANY CONFLICTS AND/OR DISCREPANCIES ARE TO BE BROUGHT TO THE ATTENTION OF THE ARCHITECT.
9. CONTRACTOR TO VERIFY STRUCTURAL ELEMENTS PRIOR TO CONSTRUCTION. SEE STRUCTRUAL DRAWINGS FOR ADDITIONAL INFORMATION.
10. CONTRACTOR TO VERIFY LOCATION AND SIZE OF ALL SLAB PENETRATIONS. COORDINATE WITH EQUIPMENT SPECIFICATIONS WHERE NECESSARY.
11. CONTRACTOR IS RESPONSIBLE FOR ESTABLISHING EXACT TOP OF STRUCTURAL SLAB ELEVATIONS, BASED UPON CIVIL DRAWINGS.
12. FOR CONCRETE TOPPING SLAB AREAS, SEE A2 SERIES, FLOOR PLANS AND A4 SERIES, ENLARGED PLANS.
13. VERIFY ELEVATOR PIT DIMENSIONS AND DEPTH WITH ELEVATOR MANUFACTURER PRIOR TO CONSTRUCTION. ALIGN FACE OF CONCRETE WITH FACE OF FINISH INSIDE THE ELEVATOR SHAFT, U.O.N. MAKE PROVISION FOR OSHA COMPLIANT PIT LADDER
14. FINISHED AND SUB-SURFACE CONCRETE AND/OR PAVING THAT IS EXPOSED TO WEATHER TO SLOPE TO DRAIN AND DRAIN AWAY FROM PERIMETER WALLS OF BUILDING, U.O.N.
15. CONTRACTOR SHALL HAVE ALL DEPRESSED SLOPES VERIFIED AND CERTIFIED BY A LICENSED SURVEYOR PRIOR TO THE PLACEMENT OF ANY STRUCTURAL SLAB CONCRETE.
16. ALL CURBS AND STEM WALLS TO BE 6" WIDE U.O.N.
17. SLOPE ON PATH OF TRAVEL NOT TO EXEED 5% IN DIRECTION OF TRAVEL AND 2% IN CROSS SLOPE.
18. IN GARAGES OR OTHER STRUCTURED PARKING AREAS:
19. MAINTAIN 8'-2" MINIMUM HEADROOM CLEARANCE ON VEHICULAR PATH TO AND ON ACCESSIBLE PARKING STALLS AND ACCESS DRIVE AISLES.
20. EVERYWHERE ELSE IN GARAGE OR OTHER STRUCTURED PARKING AREA, MAINTAIN 7'-0" MINIMUM HEADROOM CLEARANCE FROM ALL STRUCTURAL MEMBERS, MECHANICAL DUCTS, PLUMBING PIPES AND SPRINKLERS.
21. IN AREAS WHERE MOTOR VEHICLES ARE STORED, FLOOR SURFACES SHALL BE NONCOMBUSTIBLE, NONABSORBENT AND SLIP RESISTANT MATERIAL.
22. THE VEHICULAR RAMPS SHALL BE TEXTURED TO PREVENT TIRE SQUEAL.
23. MAXIMUM SLOPE AT NON ACCESSIBLE PARKING STALL IS 6.67%.
24. SLOPE OF THE ACCESSIBLE PARKING STALL AND ACCESS AISLE NOT TO EXCEED 2% IN ANY DIRECTION.
25. ALL CONDUITS INTO GARAGE SHALL BE SEALED AT BOTH ENDS.
26. PROVIDE PIPE, DUCT GUARDS, OR BOLLARDS AT ALL LOCATIONS WHERE PIPES AND MECHANICAL DUCTS ARE EXPOSED TO VEHICLE IMPACT IN GARAGE, WHETHER OR NOT INDICATED IN DRAWINGS. COORDINATE ALL FINAL LOCATIONS WITH ARCHITECT
27. PROVIDE DIRECTIONAL SIGNAGE TO ACCESSIBLE PARKING STALLS.

SLAB / FOUNDATION KEY

- XX.XX — TOP OF SLAB ELEVATION (RELATIVE TO LEVEL LINE, U.O.N.)
- XX.XX T.O.S. — TOP OF SLAB ELEVATION
- T.O.W. XX.XX — TOP OF WALL ELEVATION (RELATIVE TO LEVEL, U.O.N.)
- CURB OR STEM WALL
- SLOPE — SLOPE SLAB AT 1/8" PER FOOT, U.O.N.
- FD — FLOOR DRAIN, SEE PLUMBING. MAX. SLOPE TO DRAIN 1/8"/FT, U.O.N.
- SLAB STEP
- SLAB RIDGE / SLOPE POINT
- SLAB STEP AND SLOPE

PYATOK
1611 TELEGRAPH AVE.
SUITE 200
OAKLAND, CA 94612
T. 510.465.7010 | F. 510.465.8575
www.pyatok.com

THE UNITY COUNCIL
1900 FRUITVALE AVE
#2A
OAKLAND, CA 94601

2700 INTERNATIONAL
OAKLAND, CA 94601

STAMP:
PETER WALLER
C-23554
4/30/2023

ISSUE SCHEDULE

100 SD	5/11/22
50 DD	7/15/22
100 DD	9/16/22
50 CD	11/18/22
PERMIT SET	12/09/22

REVISION SCHEDULE

NO.	ISSUE	DATE

JOB NUMBER:	1937
DRAWN BY:	MA, DV, TN, MO, SP
CHECKED BY:	Checker
ISSUE DATE:	12/09/22
SCALE:	As indicated

TITLE:
SLAB PLANS - LEVEL 1

SHEET:
A2.21

PRELIMINARY - Not for Construction -

© 2019 PYATOK ARCHITECTURE & URBAN DESIGN

12/8/2022 6:04:26 PM

SLAB / FOUNDATION PLAN NOTES

1. PROPERTY LINES ARE SHOWN FOR GENERAL INFORMATION PURPOSES ONLY. SEE CIVIL DRAWINGS AND ARCHITECTURAL SITE PLAN FOR SITE LOCATION OF THE BUILDING(S).
2. FOR LANDSCAPE AREAS, RETAINING WALLS, PLANTERS, WALKS, STEPS, FEATURES AND DETAILED SITE INFORMATION, SEE CIVIL AND LANDSCAPE DRAWINGS.
3. ALL DIMENSIONS ARE TO FACE OF MASONRY, CONCRETE, STUD OR CENTERLINE OF COLUMN AND PARTY WALL, TYPICAL, U.O.N.
4. FACE OF CONCRETE TO ALIGN WITH FACE OF STRUCTURAL SHEATHING. FACE OF STUD IS OFFSET ½" FROM FACE OF CONCRETE, TYPICAL, U.O.N.
5. PROVIDE UNDER-FLOOR DECAY AND TERMITE PROTECTION PER CBC REQUIREMENTS.
6. PROVIDE WOOD-EARTH SEPARATION PER CBC REQUIREMENTS.
7. CONTRACTOR TO CONFIRM, WITH ALL TRADES, PRIOR TO POURING SLAB, PLACEMENT AND COMPLETENESS OF HARDWARE, SLEEVES, UTILITIES, ETC. INTO OR THROUGH STRUCTURAL CONCRETE DECK. FOR ADDITIONAL INFORMATION REFER TO MECHANICAL, ELECTRICAL, PLUMBING, STRUCTURAL AND CIVIL DRAWINGS.
8. ALL BLOCKOUT DIMENSIONS ARE APPROXIMATE; CONTRACTOR TO VERIFY SIZE AND LOCATIONS OF ALL SLAB AND WALL OPENINGS, PENETRATIONS, AND EMBEDMENT PRIOR TO PLACEMENT OF CONCRETE. ANY CONFLICTS AND/OR DISCREPANCIES ARE TO BE BROUGHT TO THE ATTENTION OF THE ARCHITECT.
9. CONTRACTOR TO VERIFY STRUCTURAL ELEMENTS PRIOR TO CONSTRUCTION. SEE STRUCTRUAL DRAWINGS FOR ADDITIONAL INFORMATION.
10. CONTRACTOR TO VERIFY LOCATION AND SIZE OF ALL SLAB PENETRATIONS. COORDINATE WITH EQUIPMENT SPECIFICATIONS WHERE NECESSARY.
11. CONTRACTOR IS RESPONSIBLE FOR ESTABLISHING EXACT TOP OF STRUCTURAL SLAB ELEVATIONS, BASED UPON CIVIL DRAWINGS.
12. FOR CONCRETE TOPPING SLAB AREAS, SEE A2 SERIES, FLOOR PLANS AND A4 SERIES, ENLARGED PLANS.
13. VERIFY ELEVATOR PIT DIMENSIONS AND DEPTH WITH ELEVATOR MANUFACTURER PRIOR TO CONSTRUCTION. ALIGN FACE OF CONCRETE WITH FACE OF FINISH INSIDE THE ELEVATOR SHAFT, U.O.N. MAKE PROVISION FOR OSHA COMPLIANT PIT LADDER
14. FINISHED AND SUB-SURFACE CONCRETE AND/OR PAVING THAT IS EXPOSED TO WEATHER TO SLOPE TO DRAIN AND DRAIN AWAY FROM PERIMETER WALLS OF BUILDING, U.O.N.
15. CONTRACTOR SHALL HAVE ALL DEPRESSED SLOPES VERIFIED AND CERTIFIED BY A LICENSED SURVEYOR PRIOR TO THE PLACEMENT OF ANY STRUCTURAL SLAB CONCRETE.
16. ALL CURBS AND STEM WALLS TO BE 6" WIDE U.O.N.
17. SLOPE ON PATH OF TRAVEL NOT TO EXEED 5% IN DIRECTION OF TRAVEL AND 2% IN CROSS SLOPE.
18. IN GARAGES OR OTHER STRUCTURED PARKING AREAS:
19. MAINTAIN 8'-2" MINIMUM HEADROOM CLEARANCE ON VEHICULAR PATH TO AND ON ACCESSIBLE PARKING STALLS AND ACCESS DRIVE AISLES.
20. EVERYWHERE ELSE IN GARAGE OR OTHER STRUCTURED PARKING AREA, MAINTAIN 7'-0" MINIMUM HEADROOM CLEARANCE FROM ALL STRUCTURAL MEMBERS, MECHANICAL DUCTS, PLUMBING PIPES AND SPRINKLERS.
21. IN AREAS WHERE MOTOR VEHICLES ARE STORED, FLOOR SURFACES SHALL BE NONCOMBUSTIBLE, NONABSORBENT AND SLIP RESISTANT MATERIAL.
22. THE VEHICULAR RAMPS SHALL BE TEXTURED TO PREVENT TIRE SQUEAL.
23. MAXIMUM SLOPE AT NON ACCESSIBLE PARKING STALL IS 6.67%.
24. SLOPE OF THE ACCESSIBLE PARKING STALL AND ACCESS AISLE NOT TO EXCEED 2% IN ANY DIRECTION.
25. ALL CONDUITS INTO GARAGE SHALL BE SEALED AT BOTH ENDS.
26. PROVIDE PIPE, DUCT GUARDS, OR BOLLARDS AT ALL LOCATIONS WHERE PIPES AND MECHANICAL DUCTS ARE EXPOSED TO VEHICLE IMPACT IN GARAGE, WHETHER OR NOT INDICATED IN DRAWINGS. COORDINATE ALL FINAL LOCATIONS WITH ARCHITECT
27. PROVIDE DIRECTIONAL SIGNAGE TO ACCESSIBLE PARKING STALLS.

SLAB / FOUNDATION KEY

- XX.XX — TOP OF SLAB ELEVATION (RELATIVE TO LEVEL LINE, U.O.N.)
- XX.XX T.O.S. — TOP OF SLAB ELEVATION
- T.O.W. XX.XX — TOP OF WALL ELEVATION (RELATIVE TO LEVEL, U.O.N.)
- CURB OR STEM WALL
- SLOPE — SLOPE SLAB AT 1/8" PER FOOT, U.O.N.
- FD — FLOOR DRAIN, SEE PLUMBING. MAX. SLOPE TO DRAIN 1/8"/FT, U.O.N.
- SLAB STEP
- SLAB RIDGE / SLOPE POINT
- SLAB STEP AND SLOPE

KEYNOTE LEGEND	
#	KEYNOTE
22-14A	AREA DRAIN, S.P.D.

SLAB PLAN - LEVEL 2 (1)
1/8" = 1'-0"

SCALE: 1/8" = 1'-0"

PYATOK
1611 TELEGRAPH AVE.
SUITE 200
OAKLAND, CA 94612
T. 510.465.7010 | F. 510.465.8575
www.pyatok.com

THE UNITY COUNCIL
1900 FRUITVALE AVE
#2A
OAKLAND, CA 94601

2700 INTERNATIONAL
OAKLAND, CA 94601

STAMP:
PETER WALLER
C-23554
REN: 08/31/2023

ISSUE SCHEDULE

100 SD	5/11/22
50 DD	7/15/22
100 DD	9/16/22
50 CD	11/18/22
PERMIT SET	12/09/22

REVISION SCHEDULE

NO.	ISSUE	DATE

JOB NUMBER:	1937
DRAWN BY:	MA, DV, TN, MO, SP
CHECKED BY:	Checker
ISSUE DATE:	12/09/22
SCALE:	As indicated

TITLE:
SLAB PLANS - LEVEL 2

SHEET:
A2.22

PRELIMINARY - Not for Construction -

© 2019 PYATOK ARCHITECTURE & URBAN DESIGN

12/9/2022 6:04:30 PM

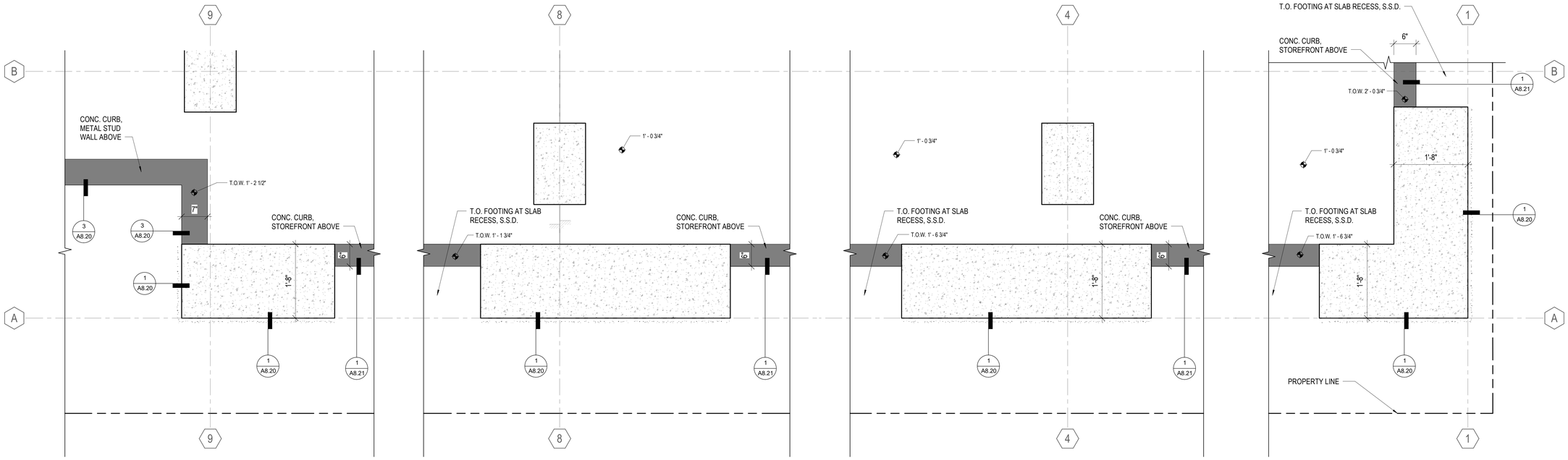

ENLARGED SLAB PLAN B 2
1" = 1'-0"

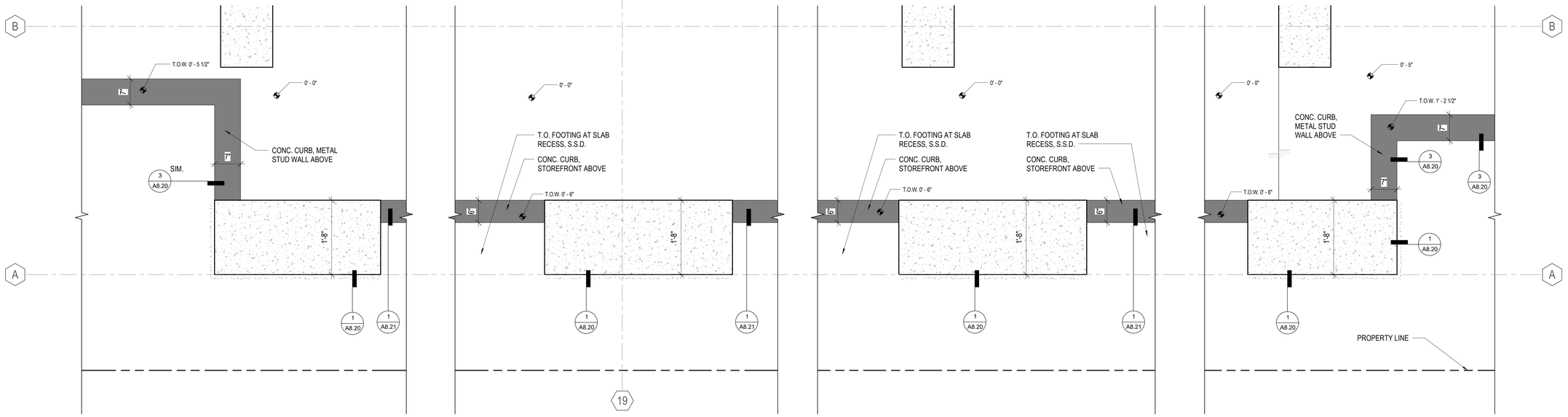

ENLARGED SLAB PLAN A 1
1" = 1'-0"

SLAB / FOUNDATION KEY

XX.XX	TOP OF SLAB ELEVATION (RELATIVE TO LEVEL LINE, U.O.N.)
XX.XX T.O.S.	TOP OF SLAB ELEVATION
T.O.W. XX.XX	TOP OF WALL ELEVATION (RELATIVE TO LEVEL, U.O.N.)
	CURB OR STEM WALL
SLOPE	SLOPE SLAB AT 1/8" PER FOOT, U.O.N.
FD	FLOOR DRAIN, SEE PLUMBING MAX. SLOPE TO DRAIN 1/8"/FT, U.O.N.
	SLAB STEP
	SLAB RIDGE / SLOPE POINT
	SLAB STEP AND SLOPE

PYATOK
1611 TELEGRAPH AVE.
SUITE 200
OAKLAND, CA 94612
T. 510.465.7010 | F. 510.465.8575
www.pyatok.com

THE UNITY COUNCIL
1900 FRUITVALE AVE
#2A
OAKLAND, CA 94601

2700 INTERNATIONAL
OAKLAND, CA 94601

STAMP:

LICENSED ARCHITECT
PETER WALLER
C-23551
4/30/2023
STATE OF CALIFORNIA

ISSUE SCHEDULE

100 SD	5/11/22
50 DD	7/15/22
100 DD	9/16/22
50 CD	11/18/22
PERMIT SET	12/09/22

REVISION SCHEDULE

NO.	ISSUE	DATE

JOB NUMBER:	1937
DRAWN BY:	MA, DV, TN, MO, SP
CHECKED BY:	Checker
ISSUE DATE:	12/09/22
SCALE:	As indicated

TITLE:
ENLARGED SLAB PLANS

SHEET:
A2.31

PRELIMINARY - Not for Construction -

© 2019 PYATOK ARCHITECTURE & URBAN DESIGN

12/8/2022 6:04:33 PM

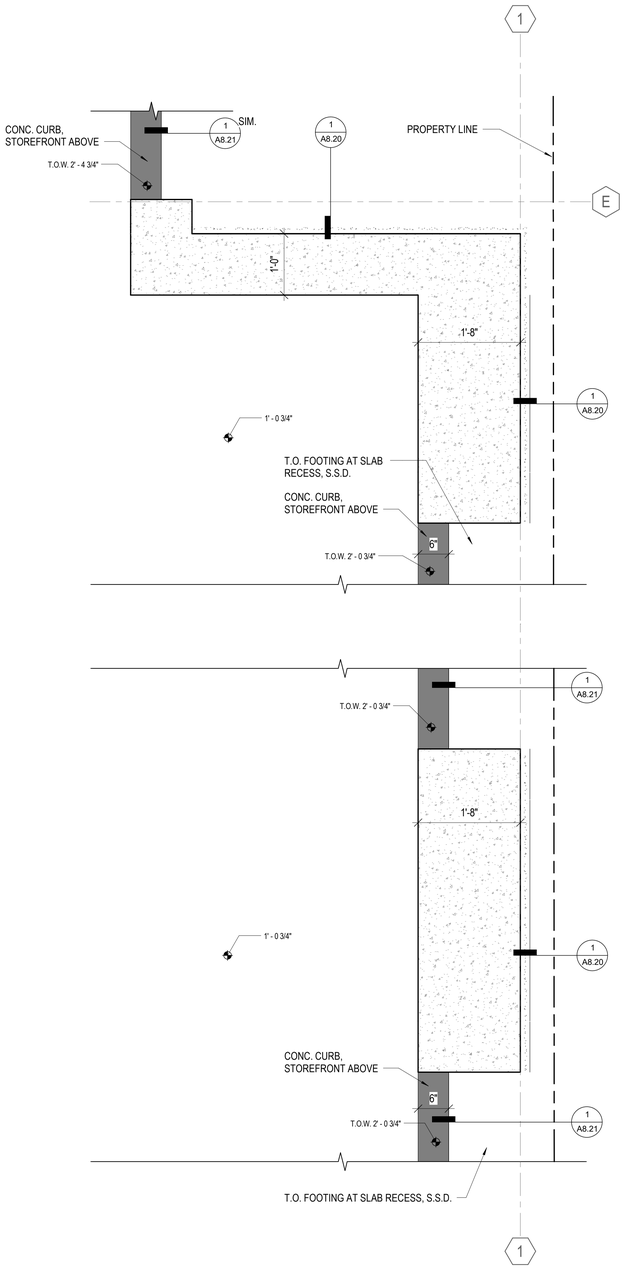

ENLARGED SLAB PLAN C (1)
1" = 1'-0"

SLAB / FOUNDATION KEY

- XX.XX — TOP OF SLAB ELEVATION (RELATIVE TO LEVEL LINE, U.O.N.)
- XX.XX T.O.S. — TOP OF SLAB ELEVATION
- T.O.W. XX.XX — TOP OF WALL ELEVATION (RELATIVE TO LEVEL, U.O.N.)
- CURB OR STEM WALL
- SLOPE — SLOPE SLAB AT 1/8" PER FOOT, U.O.N.
- FD — FLOOR DRAIN, SEE PLUMBING MAX. SLOPE TO DRAIN 1/8"/FT, U.O.N.
- SLAB STEP
- SLAB RIDGE / SLOPE POINT
- SLAB STEP AND SLOPE

12/8/2022 6:04:36 PM

PYATOK
1611 TELEGRAPH AVE.
SUITE 200
OAKLAND, CA 94612
T. 510.465.7010 | F. 510.465.8575
www.pyatok.com

THE UNITY COUNCIL
1900 FRUITVALE AVE
#2A
OAKLAND, CA 94601

2700 INTERNATIONAL
OAKLAND, CA 94601

STAMP:
LICENSED ARCHITECT
PETER WALLER
C-23551
REGISTERED
4/30/2023
STATE OF CALIFORNIA

ISSUE SCHEDULE

100 SD	5/11/22
50 DD	7/15/22
100 DD	9/16/22
50 CD	11/18/22
PERMIT SET	12/09/22

REVISION SCHEDULE

NO.	ISSUE	DATE

JOB NUMBER:	1937
DRAWN BY:	MA, DV, TN, MO, SP
CHECKED BY:	Checker
ISSUE DATE:	12/09/22
SCALE:	As indicated

TITLE:
ENLARGED SLAB PLANS

SHEET:
A2.32

PRELIMINARY - Not for Construction -

© 2019 PYATOK ARCHITECTURE & URBAN DESIGN

COLOR ELEVATION - MITCHELL STREET
1/8" = 1'-0" (2)

COLOR ELEVATION - INTERNATIONAL BOULEVARD
1/8" = 1'-0" (1)

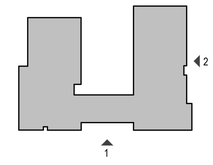

SCALE: 1/8" = 1'-0"

12/8/2022 6:05:40 PM

PYATOK
1611 TELEGRAPH AVE.
SUITE 200
OAKLAND, CA 94612
T. 510.465.7010 | F. 510.465.8575
www.pyatok.com

THE UNITY COUNCIL
1900 FRUITVALE AVE
#2A
OAKLAND, CA 94601

2700 INTERNATIONAL

OAKLAND, CA 94601

STAMP:

LICENSED ARCHITECT
PETER WALLER
C-23554
4/30/2023
STATE OF CALIFORNIA

ISSUE SCHEDULE

100 SD	5/11/22
50 DD	7/15/22
100 DD	9/16/22
50 CD	11/18/22
PERMIT SET	12/09/22

REVISION SCHEDULE

NO.	ISSUE	DATE

JOB NUMBER:	1937
DRAWN BY:	MA, DV, TN, MO, SP
CHECKED BY:	Checker
ISSUE DATE:	12/09/22
SCALE:	As indicated

TITLE:
COLOR ELEVATIONS

SHEET:
A3.00

PRELIMINARY - Not for Construction -

© 2019 PYATOK ARCHITECTURE & URBAN DESIGN

COLOR ELEVATION - 27TH AVE (2)
1/8" = 1'-0"

NORTH COLOR ELEVATION (1)
1/8" = 1'-0"

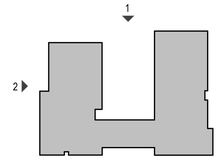

0' 4' 8' 16' 32'
SCALE: 1/8" = 1'-0"

12/8/2022 6:06:35 PM

PYATOK
1611 TELEGRAPH AVE.
SUITE 200
OAKLAND, CA 94612
T. 510.465.7010 | F. 510.465.8575
www.pyatok.com

THE UNITY COUNCIL
1900 FRUITVALE AVE
#2A
OAKLAND, CA 94601

2700 INTERNATIONAL
OAKLAND, CA 94601

STAMP:
LICENSED ARCHITECT
PETER WALLER
C-33554
4/30/2023
STATE OF CALIFORNIA

ISSUE SCHEDULE

100 SD	5/11/22
50 DD	7/15/22
100 DD	9/16/22
50 CD	11/18/22
PERMIT SET	12/09/22

REVISION SCHEDULE

NO.	ISSUE	DATE

JOB NUMBER:	1937
DRAWN BY:	MA, DV, TN, MO, SP
CHECKED BY:	Checker
ISSUE DATE:	12/09/22
SCALE:	As indicated

TITLE:
COLOR ELEVATIONS

SHEET:
A3.01

PRELIMINARY - Not for Construction -

© 2019 PYATOK ARCHITECTURE & URBAN DESIGN

WEST COLOR ELEVATION - COURTYARD (2)
1/8" = 1'-0"

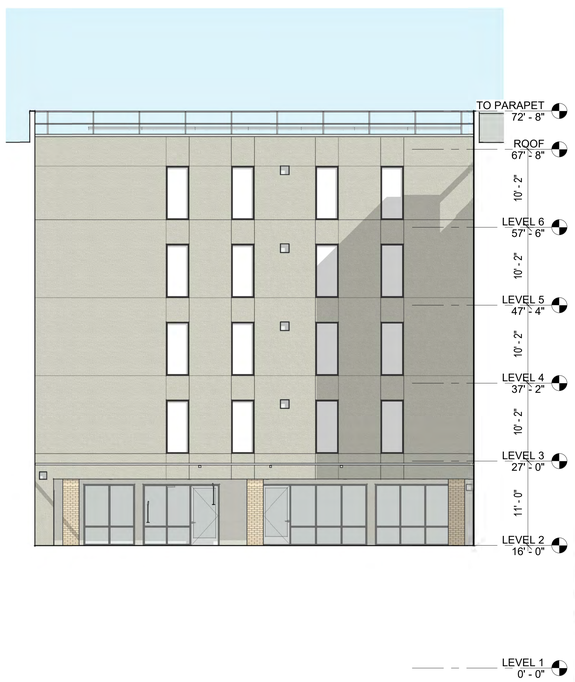

SOUTH COLOR ELEVATION - COURTYARD (3)
1/8" = 1'-0"

EAST COLOR ELEVATION - COURTYARD (1)
1/8" = 1'-0"

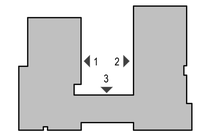

0' 4' 8' 16' 32'
SCALE: 1/8" = 1'-0"

12/8/2022 6:07:48 PM

PYATOK
1611 TELEGRAPH AVE.
SUITE 200
OAKLAND, CA 94612
T. 510.465.7010 | F. 510.465.8575
www.pyatok.com

THE UNITY COUNCIL
1900 FRUITVALE AVE
#2A
OAKLAND, CA 94601

2700 INTERNATIONAL
OAKLAND, CA 94601

STAMP:
LICENSED ARCHITECT
PETER WALLER
C-23558
4/30/2023
STATE OF CALIFORNIA

ISSUE SCHEDULE

100 SD	5/11/22
50 DD	7/15/22
100 DD	9/16/22
50 CD	11/18/22
PERMIT SET	12/09/22

REVISION SCHEDULE

NO.	ISSUE	DATE

JOB NUMBER:	1937
DRAWN BY:	MA, DV, TN, MO, SP
CHECKED BY:	Checker
ISSUE DATE:	12/09/22
SCALE:	As indicated

TITLE:
COLOR ELEVATIONS

SHEET:
A3.02

PRELIMINARY - Not for Construction -

© 2019 PYATOK ARCHITECTURE & URBAN DESIGN

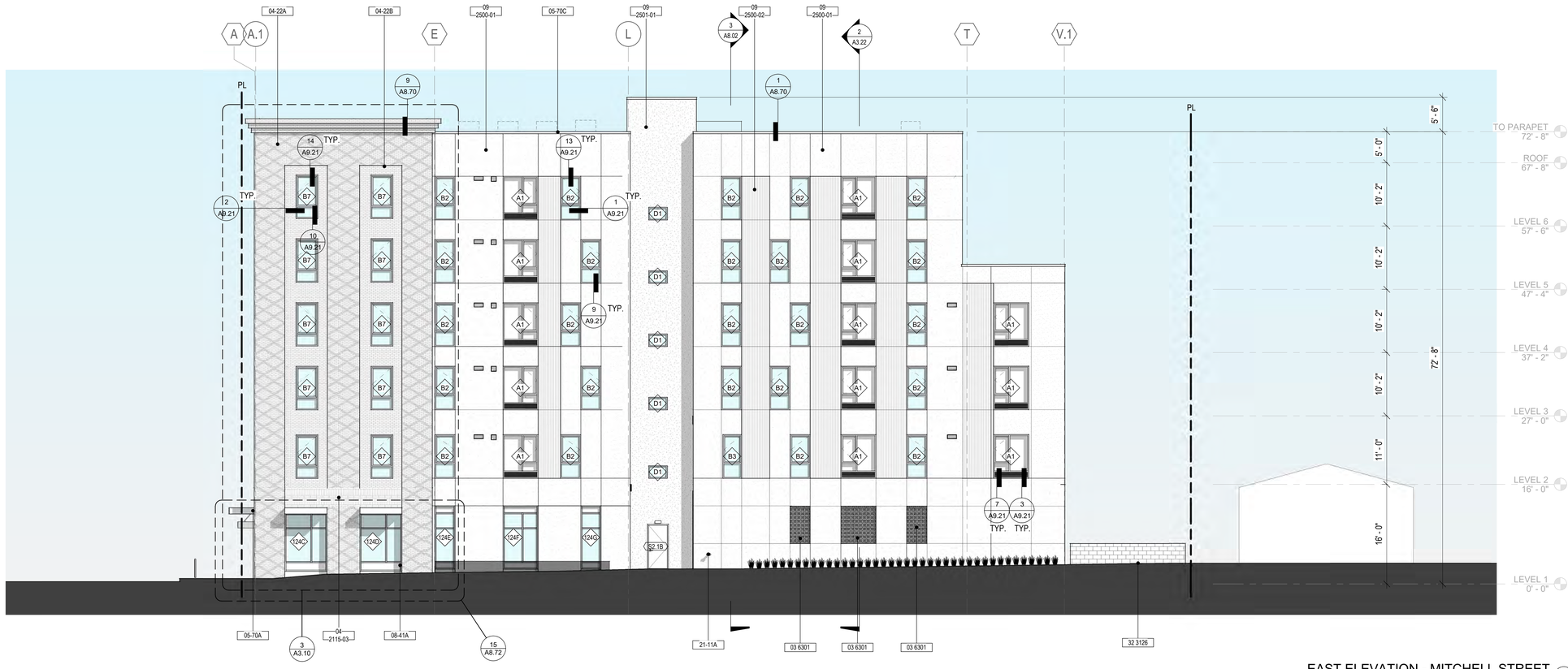

EAST ELEVATION - MITCHELL STREET (2)
1/8" = 1'-0"

SOUTH ELEVATION - INTERNATIONAL BOULEVARD (1)
1/8" = 1'-0"

KEYNOTE LEGEND	
#	KEYNOTE
03 6301	CONCRETE BREEZE BLOCK, PAINTED TO MATCH ADJACENT CEMENT PLASTER
04 2115-03	THIN BRICK, BAND PATTERN, NORMAN SHAPE, 1-1/4" THICK, WIRE CUT TEXTURE
04-22A	THIN BRICK, RUNNING BOND, STANDARD SHAPE, 1/2" (SMOOTH TEXTURE) AND 1-1/4" THICK (WIRE CUT TEXTURE) IN DIAMOND PATTERN RELIEF
04-22B	THIN BRICK, RUNNING BOND, STANDARD SHAPE, 1/2" THICK, SMOOTH TEXTURE
05-70A	AWNING, DARK METAL FASCIA
05-70C	METAL PANEL FASCIA
05-70D	AWNING WITH TIE-ROD, DARK METAL FASCIA
08-41A	ALUMINUM STOREFRONT, DARK BRONZE ANODIZED
09 2500-01	CEMENT PLASTER WITH PAINT FINISH, DARK COLOR
09 2500-02	CEMENT PLASTER WITH PAINT FINISH, DARK COLOR COMBED TEXTURE
09 2501-01	CEMENT PLASTER WITH PAINT FINISH, LIGHT COLOR
09 2501-02	CEMENT PLASTER WITH PAINT FINISH, LIGHT COLOR COMBED TEXTURE
10-14A	HANGING SIGN
10-14B	VERTICAL BLADE SIGN
10-14C	PIN MOUNTED ADDRESS
21-11A	FIRE DEPARTMENT CONNECTION
32 3126	CONCRETE PLANTER, S.L.D.

ELEVATION NOTES

1. SEE SHEET G0.00 FOR SYMBOLS & ABBREVIATIONS.
2. THESE ELEVATIONS SHOW OVERALL INFORMATION AND UNIT-TO-UNIT RELATIONSHIPS ONLY. SEE ENLARGED ELEVATIONS FOR INFORMATION NOT SHOWN.
3. ALL CONTROL JOINTS AND FINISH MATERIALS SHALL WRAP AROUND CORNERS AND CONTINUE ONTO ADJACENT WALLS WHETHER SHOWN OR NOT, UNLESS NOTED OTHERWISE. PER ASTM C 1063 INSTALL CONTROL JOINTS WHERE AN EXPANSION JOINT OCCURS IN THE BASE EXTERIOR WALL. INSTALL CONTROL JOINTS WHERE CEILING FRAMING OR FURRING CHANGES DIRECTION.
4. PER ASTM C 1063, EXTERIOR PLASTER CONTROL JOINTS TO BE INSTALLED IN VERTICAL SURFACES EXCEEDING 144 SQUARE FEET IN AREA AND HORIZONTAL SURFACES EXCEEDING 100 SQUARE FEET IN AREA. DISTANCE BETWEEN CONTROL JOINTS SHALL NOT EXCEED 18 FEET IN EITHER DIRECTION OR A LENGTH-TO-WIDTH RATIO OF 2.5 TO 1.
5. ALL WEEP SCREED LINES SHALL BE LEVEL AND STEP WITH ADJACENT GRADE. STEPPING OF WEEP SCREED TO OCCUR AT INSIDE CORNERS. BOTTOM EDGE OF WEEP SCREED SHALL BE INSTALLED NOT LESS THAN 1 INCH BELOW THE JOINT FORMED BY THE FOUNDATION AND FRAMING. NOSE OF SCREED SHALL BE PLACED 6 INCHES MINIMUM ABOVE GRADE OR 2 INCHES MINIMUM ABOVE PAVED SURFACE.
6. ALL WINDOW HEAD HEIGHTS TO BE **X'-XX"** FROM TOP OF SHEATHING AT WOOD STRUCTURE AND **X'-XX"** AT CONCRETE, TYPICAL U.O.N.
7. ALL EXTERIOR WALL PENETRATIONS SHALL BE SEALED.
8. ALL GUTTERS SHALL BE LEVEL U.O.N. AND RAINWATER LEADERS SHALL VERTICALLY ALIGN WITH WALLS INCLUDING PRIVATE DECKS AND STAIRS OPENINGS
9. REFER TO WINDOW SCHEDULE FOR WINDOW STC RATINGS.
10. REFER TO MECHANICAL, PLUMBING, ELECTRICAL, AND STRUCTURAL DRAWINGS FOR ADDITIONAL INFORMATION.
11. FRAMING SUB-CONTRACTOR SHALL REVIEW AND COORDINATE EXTERIOR LIGHTING AND SIGNAGE LOCATIONS AND SHALL PROVIDE SOLID BLOCKING WHERE REQUIRED.
12. FAÇADE ACCESS PLAN SHALL BE PROVIDED BY OWNER TO COMPLY WITH OSHA REGULATIONS FOR BUILDING MAINTENANCE.
13. CONTRACTOR IS RESPONSIBLE FOR BRINGING ANY CONFLICTS AND/OR DISCREPANCIES TO THE ATTENTION OF THE ARCHITECT.
14. ALL LEVELS ARE TO TOP OF PLYWOOD SUBFLOOR OR TOP OF STRUCTURAL CONCRETE, U.O.N.
15. FOR DOOR AND WINDOW TYPES AND SIZES, SEE SCHEDULES AND LEGENDS ON A9.12, 9.13, 9.20, & 9.21.
16. SEE COLOR ELEVATIONS ON SHEETS A3.00-3.02 FOR PAINT SCHEDULE.

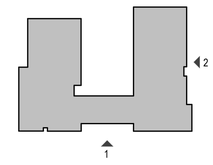

0' 4' 8' 16' 32'

SCALE: 1/8" = 1'-0"

PYATOK
1611 TELEGRAPH AVE.
SUITE 200
OAKLAND, CA 94612
T. 510.465.7010 | F. 510.465.8575
www.pyatok.com

THE UNITY COUNCIL
1900 FRUITVALE AVE
#2A
OAKLAND, CA 94601

2700 INTERNATIONAL

OAKLAND, CA 94601

STAMP:

LICENSED ARCHITECT — PETER WALLER — C-35554 — 4/30/2023 — STATE OF CALIFORNIA

ISSUE SCHEDULE

100 SD	5/11/22
50 DD	7/15/22
100 DD	9/16/22
50 CD	11/18/22
PERMIT SET	12/09/22

REVISION SCHEDULE

NO.	ISSUE	DATE

JOB NUMBER:	1937
DRAWN BY:	MA, DV, TN, MO, SP
CHECKED BY:	Checker
ISSUE DATE:	12/09/22
SCALE:	As indicated

TITLE:

ELEVATIONS

SHEET:

A3.03

PRELIMINARY - Not for Construction -

© 2019 PYATOK ARCHITECTURE & URBAN DESIGN

12/8/2022 6:08:01 PM

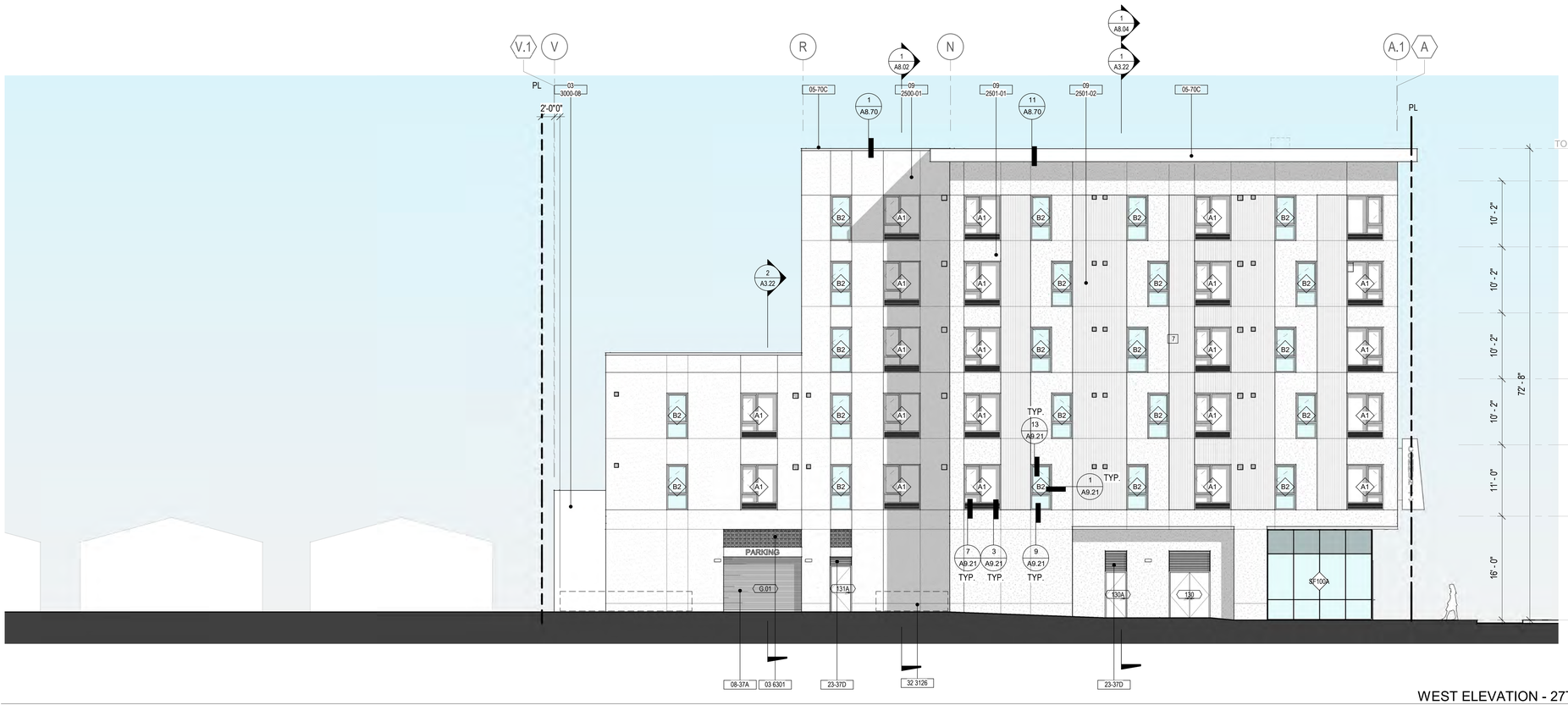

WEST ELEVATION - 27TH AVE (2)
1/8" = 1'-0"

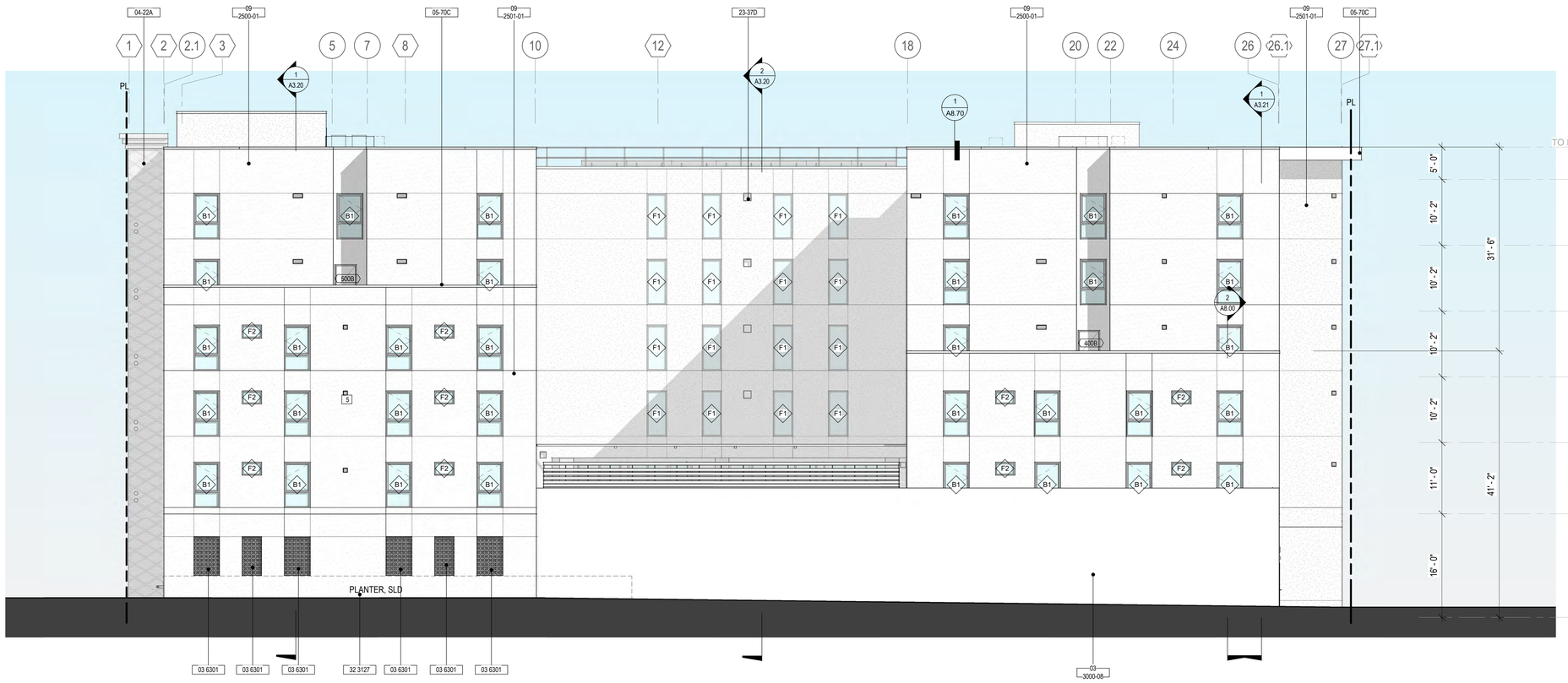

NORTH ELEVATION (1)
1/8" = 1'-0"

KEYNOTE LEGEND	
#	KEYNOTE
03 3000-08	CAST IN PLACE CONCRETE, SMOOTH FINISH
03 6301	CONCRETE BREEZE BLOCK, PAINTED TO MATCH ADJACENT CEMENT PLASTER
04-22A	THIN BRICK, RUNNING BOND, STANDARD SHAPE, 1/2" (SMOOTH TEXTURE) AND 1-1/4" THICK (WIRE CUT TEXTURE) IN DIAMOND PATTERN RELIEF
05-70C	METAL PANEL FASCIA
08-37A	OVERHEAD SECTIONAL GARAGE DOOR, PREFORATED METAL WITH PAINT FINISH & MAXIMUM TRANSPARENCY OF 35%
09 2500-01	CEMENT PLASTER WITH PAINT FINISH, DARK COLOR
09 2501-01	CEMENT PLASTER WITH PAINT FINISH, LIGHT COLOR
09 2501-02	CEMENT PLASTER WITH PAINT FINISH, LIGHT COLOR COMBED TEXTURE
23-37D	LOUVER, PAINTED TO MATCH ADJACENT WALL SURFACE
32 3126	CONCRETE PLANTER, S.L.D.
32 3127	PLANTER, SLD

ELEVATION NOTES

1. SEE SHEET G0.00 FOR SYMBOLS & ABBREVIATIONS.
2. THESE ELEVATIONS SHOW OVERALL INFORMATION AND UNIT-TO-UNIT RELATIONSHIPS ONLY. SEE ENLARGED ELEVATIONS FOR INFORMATION NOT SHOWN.
3. ALL CONTROL JOINTS AND FINISH MATERIALS SHALL WRAP AROUND CORNERS AND CONTINUE ONTO ADJACENT WALLS WHETHER SHOWN OR NOT, UNLESS NOTED OTHERWISE. PER ASTM C 1063 INSTALL CONTROL JOINTS WHERE AN EXPANSION JOINT OCCURS IN THE BASE EXTERIOR WALL. INSTALL CONTROL JOINTS WHERE CEILING FRAMING OR FURRING CHANGES DIRECTION.
4. PER ASTM C 1063, EXTERIOR PLASTER CONTROL JOINTS TO BE INSTALLED IN VERTICAL SURFACES EXCEEDING 144 SQUARE FEET IN AREA AND HORIZONTAL SURFACES EXCEEDING 100 SQUARE FEET IN AREA. DISTANCE BETWEEN CONTROL JOINTS SHALL NOT EXCEED 18 FEET IN EITHER DIRECTION OR A LENGTH-TO-WIDTH RATIO OF 2.5 TO 1.
5. ALL WEEP SCREED LINES SHALL BE LEVEL AND STEP WITH ADJACENT GRADE. STEPPING OF WEEP SCREED TO OCCUR AT INSIDE CORNERS. BOTTOM EDGE OF WEEP SCREED SHALL BE INSTALLED NOT LESS THAN 1 INCH BELOW THE JOINT FORMED BY THE FOUNDATION AND FRAMING. NOSE OF SCREED SHALL BE PLACED 6 INCHES MINIMUM ABOVE GRADE OR 2 INCHES MINIMUM ABOVE PAVED SURFACE.
6. ALL WINDOW HEAD HEIGHTS TO BE **X'-XX"** FROM TOP OF SHEATHING AT WOOD STRUCTURE AND **X'-XX"** AT CONCRETE, TYPICAL U.O.N.
7. ALL EXTERIOR WALL PENETRATIONS SHALL BE SEALED.
8. ALL GUTTERS SHALL BE LEVEL U.O.N. AND RAINWATER LEADERS SHALL VERTICALLY ALIGN WITH WALLS INCLUDING PRIVATE DECKS AND STAIRS OPENINGS
9. REFER TO WINDOW SCHEDULE FOR WINDOW STC RATINGS.
10. REFER TO MECHANICAL, PLUMBING, ELECTRICAL, AND STRUCTURAL DRAWINGS FOR ADDITIONAL INFORMATION.
11. FRAMING SUB-CONTRACTOR SHALL REVIEW AND COORDINATE EXTERIOR LIGHTING AND SIGNAGE LOCATIONS AND SHALL PROVIDE SOLID BLOCKING WHERE REQUIRED.
12. FAÇADE ACCESS PLAN SHALL BE PROVIDED BY OWNER TO COMPLY WITH OSHA REGULATIONS FOR BUILDING MAINTENANCE.
13. CONTRACTOR IS RESPONSIBLE FOR BRINGING ANY CONFLICTS AND/OR DISCREPANCIES TO THE ATTENTION OF THE ARCHITECT.
14. ALL LEVELS ARE TO TOP OF PLYWOOD SUBFLOOR OR TOP OF STRUCTURAL CONCRETE, U.O.N.
15. FOR DOOR AND WINDOW TYPES AND SIZES, SEE SCHEDULES AND LEGENDS ON A9.12, 9.13, 9.20, & 9.21.
16. SEE COLOR ELEVATIONS ON SHEETS A3.00-3.02 FOR PAINT SCHEDULE.

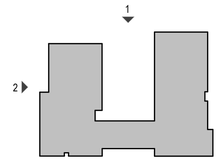

0' 4' 8' 16' 32'

SCALE: 1/8" = 1'-0"

PYATOK
1611 TELEGRAPH AVE.
SUITE 200
OAKLAND, CA 94612
T. 510.465.7010 | F. 510.465.8575
www.pyatok.com

THE UNITY COUNCIL
1900 FRUITVALE AVE
#2A
OAKLAND, CA 94601

2700 INTERNATIONAL

OAKLAND, CA 94601

STAMP:

LICENSED ARCHITECT — PETER WALLER — C-33554 — 4/30/2023 — STATE OF CALIFORNIA

ISSUE SCHEDULE

100 SD	5/11/22
50 DD	7/15/22
100 DD	9/16/22
50 CD	11/18/22
PERMIT SET	12/09/22

REVISION SCHEDULE

NO.	ISSUE	DATE

JOB NUMBER:	1937
DRAWN BY:	MA, DV, TN, MO, SP
CHECKED BY:	Checker
ISSUE DATE:	12/09/22
SCALE:	As indicated

TITLE:

ELEVATIONS

SHEET:

A3.04

PRELIMINARY - Not for Construction -

© 2019 PYATOK ARCHITECTURE & URBAN DESIGN

12/8/2022 6:08:14 PM

WEST ELEVATION - COURTYARD (3)
1/8" = 1'-0"

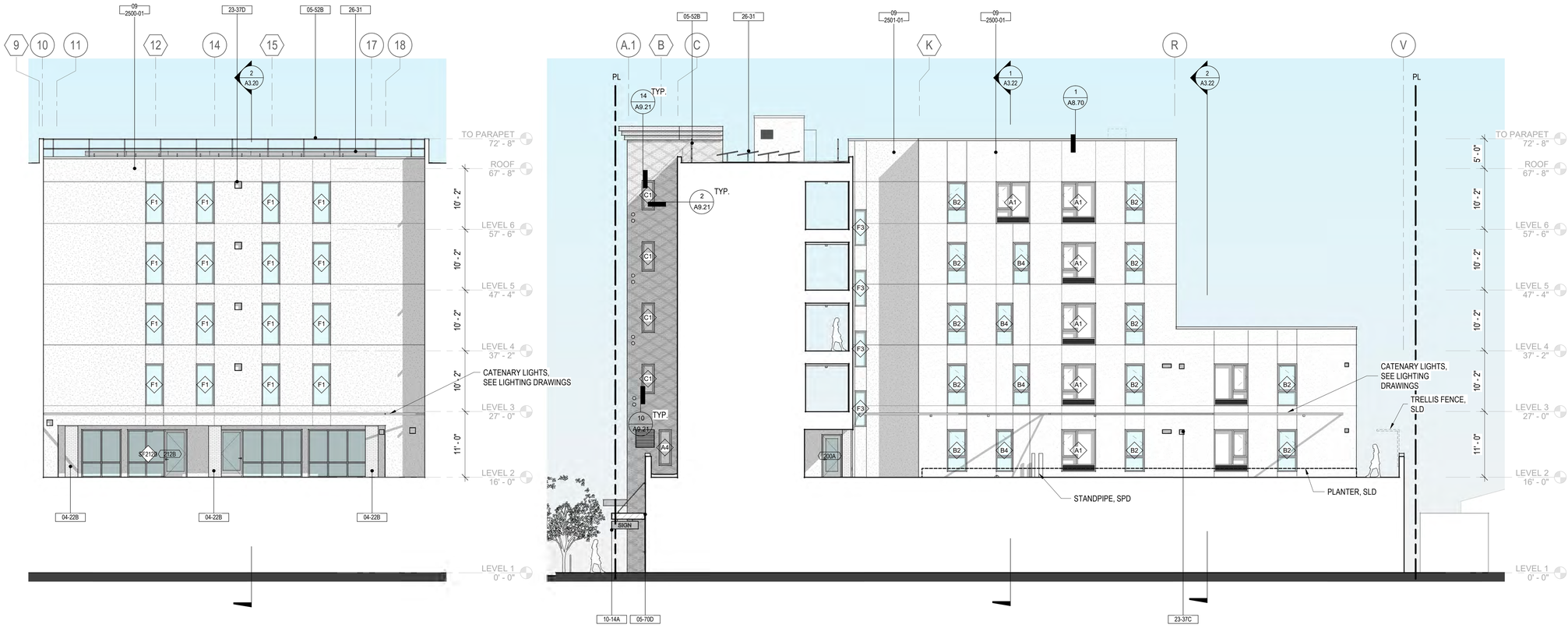

SOUTH ELEVATION - COURTYARD (2)
1/8" = 1'-0"

EAST ELEVATION - COURTYARD (1)
1/8" = 1'-0"

KEYNOTE LEGEND	
#	KEYNOTE
04-22A	THIN BRICK, RUNNING BOND, STANDARD SHAPE, 1/2" (SMOOTH TEXTURE) AND 1-1/4" THICK (WIRE CUT TEXTURE) IN DIAMOND PATTERN RELIEF
04-22B	THIN BRICK, RUNNING BOND, STANDARD SHAPE, 1/2" THICK, SMOOTH TEXTURE
05-52B	STEEL OSHA RAILING
05-70C	METAL PANEL FASCIA
05-70D	AWNING WITH TIE-ROD, DARK METAL FASCIA
06-40A	TRELLIS, S.L.D.
09 2500-01	CEMENT PLASTER WITH PAINT FINISH, DARK COLOR
09 2501-01	CEMENT PLASTER WITH PAINT FINISH, LIGHT COLOR
09-24	CONTROL JOINT PAINTED TO MATCH ADJACENT WALL SURFACE
10-14A	HANGING SIGN
23-37C	MECHANICAL LOUVER, S.M.D.
23-37D	LOUVER, PAINTED TO MATCH ADJACENT WALL SURFACE
26-31	PHOTOVOLTAIC PANELS

ELEVATION NOTES

1. SEE SHEET G0.00 FOR SYMBOLS & ABBREVIATIONS.
2. THESE ELEVATIONS SHOW OVERALL INFORMATION AND UNIT-TO-UNIT RELATIONSHIPS ONLY, SEE ENLARGED ELEVATIONS FOR INFORMATION NOT SHOWN.
3. ALL CONTROL JOINTS AND FINISH MATERIALS SHALL WRAP AROUND CORNERS AND CONTINUE ONTO ADJACENT WALLS WHETHER SHOWN OR NOT, UNLESS NOTED OTHERWISE. PER ASTM C 1063 INSTALL CONTROL JOINTS WHERE AN EXPANSION JOINT OCCURS IN THE BASE EXTERIOR WALL. INSTALL CONTROL JOINTS WHERE CEILING FRAMING OR FURRING CHANGES DIRECTION.
4. PER ASTM C 1063, EXTERIOR PLASTER CONTROL JOINTS TO BE INSTALLED IN VERTICAL SURFACES EXCEEDING 144 SQUARE FEET IN AREA AND HORIZONTAL SURFACES EXCEEDING 100 SQUARE FEET IN AREA. DISTANCE BETWEEN CONTROL JOINTS SHALL NOT EXCEED 18 FEET IN EITHER DIRECTION OR A LENGTH-TO-WIDTH RATIO OF 2.5 TO 1.
5. ALL WEEP SCREED LINES SHALL BE LEVEL AND STEP WITH ADJACENT GRADE. STEPPING OF WEEP SCREED TO OCCUR AT INSIDE CORNERS. BOTTOM EDGE OF WEEP SCREED SHALL BE INSTALLED NOT LESS THAN 1 INCH BELOW THE JOINT FORMED BY THE FOUNDATION AND FRAMING. NOSE OF SCREED SHALL BE PLACED 6 INCHES MINIMUM ABOVE GRADE OR 2 INCHES MINIMUM ABOVE PAVED SURFACE.
6. ALL WINDOW HEAD HEIGHTS TO BE **X'-XX"** FROM TOP OF SHEATHING AT WOOD STRUCTURE AND **X'-XX"** AT CONCRETE, TYPICAL U.O.N.
7. ALL EXTERIOR WALL PENETRATIONS SHALL BE SEALED.
8. ALL GUTTERS SHALL BE LEVEL U.O.N. AND RAINWATER LEADERS SHALL VERTICALLY ALIGN WITH WALLS INCLUDING PRIVATE DECKS AND STAIRS OPENINGS
9. REFER TO WINDOW SCHEDULE FOR WINDOW STC RATINGS.
10. REFER TO MECHANICAL, PLUMBING, ELECTRICAL, AND STRUCTURAL DRAWINGS FOR ADDITIONAL INFORMATION.
11. FRAMING SUB-CONTRACTOR SHALL REVIEW AND COORDINATE EXTERIOR LIGHTING AND SIGNAGE LOCATIONS AND SHALL PROVIDE SOLID BLOCKING WHERE REQUIRED.
12. FAÇADE ACCESS PLAN SHALL BE PROVIDED BY OWNER TO COMPLY WITH OSHA REGULATIONS FOR BUILDING MAINTENANCE.
13. CONTRACTOR IS RESPONSIBLE FOR BRINGING ANY CONFLICTS AND/OR DISCREPANCIES TO THE ATTENTION OF THE ARCHITECT.
14. ALL LEVELS ARE TO TOP OF PLYWOOD SUBFLOOR OR TOP OF STRUCTURAL CONCRETE, U.O.N.
15. FOR DOOR AND WINDOW TYPES AND SIZES, SEE SCHEDULES AND LEGENDS ON A9.12, 9.13, 9.20, & 9.21.
16. SEE COLOR ELEVATIONS ON SHEETS A3.00-3.02 FOR PAINT SCHEDULE.

PYATOK
1611 TELEGRAPH AVE.
SUITE 200
OAKLAND, CA 94612
T. 510.465.7010 | F. 510.465.8575
www.pyatok.com

THE UNITY COUNCIL
1900 FRUITVALE AVE
#2A
OAKLAND, CA 94601

2700 INTERNATIONAL

OAKLAND, CA 94601

STAMP:

LICENSED ARCHITECT — PETER WALLER — C-35551 — 4/30/2023 — STATE OF CALIFORNIA

ISSUE SCHEDULE

100 SD	5/11/22
50 DD	7/15/22
100 DD	9/16/22
50 CD	11/18/22
PERMIT SET	12/09/22

REVISION SCHEDULE

NO.	ISSUE	DATE

JOB NUMBER:	1937
DRAWN BY:	MA, DV, TN, MO, SP
CHECKED BY:	Checker
ISSUE DATE:	12/09/22
SCALE:	As indicated

TITLE:
ELEVATIONS

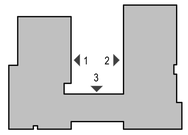

SHEET:
A3.05

PRELIMINARY - Not for Construction -

© 2019 PYATOK ARCHITECTURE & URBAN DESIGN

SCALE: 1/8" = 1'-0"
0' 4' 8' 16' 32'

12/8/2022 6:08:26 PM

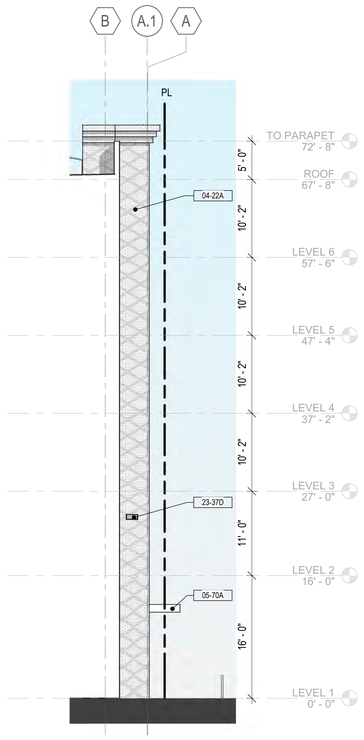

PARTIAL ELEVATION 3 (INTERNATIONAL BLVD.) 3
1/8" = 1'-0"

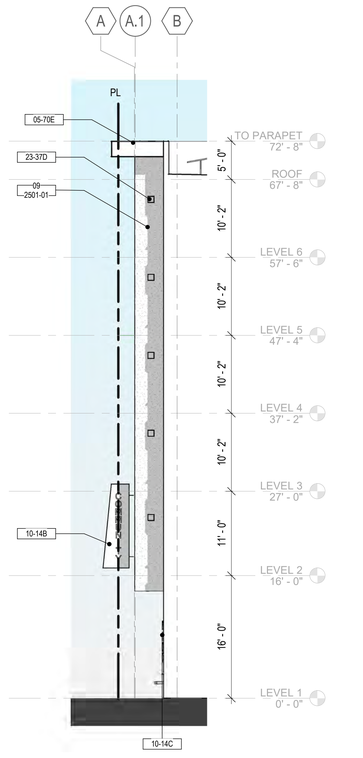

PARTIAL ELEVATION 2 (INTERNATIONAL BLVD.) 2
1/8" = 1'-0"

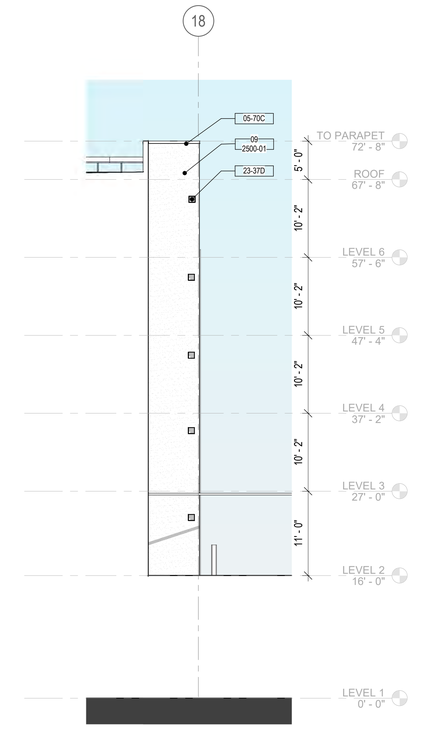

PARTIAL ELEVATION 1 (COURTYARD) 1
1/8" = 1'-0"

KEYNOTE LEGEND	
#	KEYNOTE
04-22A	THIN BRICK, RUNNING BOND, STANDARD SHAPE, 1/2" (SMOOTH TEXTURE) AND 1-1/4" THICK (WIRE CUT TEXTURE) IN DIAMOND PATTERN RELIEF
05-70A	AWNING, DARK METAL FASCIA
05-70C	METAL PANEL FASCIA
05-70E	METAL FASCIA CAP, PROJECTING
09 2500-01	CEMENT PLASTER WITH PAINT FINISH, DARK COLOR
09 2501-01	CEMENT PLASTER WITH PAINT FINISH, LIGHT COLOR
10-14B	VERTICAL BLADE SIGN
10-14C	PIN MOUNTED ADDRESS
23-37D	LOUVER, PAINTED TO MATCH ADJACENT WALL SURFACE

ELEVATION NOTES

1. SEE SHEET G0.00 FOR SYMBOLS & ABBREVIATIONS.
2. THESE ELEVATIONS SHOW OVERALL INFORMATION AND UNIT-TO-UNIT RELATIONSHIPS ONLY. SEE ENLARGED ELEVATIONS FOR INFORMATION NOT SHOWN.
3. ALL CONTROL JOINTS AND FINISH MATERIALS SHALL WRAP AROUND CORNERS AND CONTINUE ONTO ADJACENT WALLS WHETHER SHOWN OR NOT, UNLESS NOTED OTHERWISE. PER ASTM C 1063 INSTALL CONTROL JOINTS WHERE AN EXPANSION JOINT OCCURS IN THE BASE EXTERIOR WALL. INSTALL CONTROL JOINTS WHERE CEILING FRAMING OR FURRING CHANGES DIRECTION.
4. PER ASTM C 1063, EXTERIOR PLASTER CONTROL JOINTS TO BE INSTALLED IN VERTICAL SURFACES EXCEEDING 144 SQUARE FEET IN AREA AND HORIZONTAL SURFACES EXCEEDING 100 SQUARE FEET IN AREA. DISTANCE BETWEEN CONTROL JOINTS SHALL NOT EXCEED 18 FEET IN EITHER DIRECTION OR A LENGTH-TO-WIDTH RATIO OF 2.5 TO 1.
5. ALL WEEP SCREED LINES SHALL BE LEVEL AND STEP WITH ADJACENT GRADE. STEPPING OF WEEP SCREED TO OCCUR AT INSIDE CORNERS. BOTTOM EDGE OF WEEP SCREED SHALL BE INSTALLED NOT LESS THAN 1 INCH BELOW THE JOINT FORMED BY THE FOUNDATION AND FRAMING. NOSE OF SCREED SHALL BE PLACED 6 INCHES MINIMUM ABOVE GRADE OR 2 INCHES MINIMUM ABOVE PAVED SURFACE.
6. ALL WINDOW HEAD HEIGHTS TO BE **X'-XX"** FROM TOP OF SHEATHING AT WOOD STRUCTURE AND **X'-XX"** AT CONCRETE, TYPICAL U.O.N.
7. ALL EXTERIOR WALL PENETRATIONS SHALL BE SEALED.
8. ALL GUTTERS SHALL BE LEVEL U.O.N. AND RAINWATER LEADERS SHALL VERTICALLY ALIGN WITH WALLS INCLUDING PRIVATE DECKS AND STAIRS OPENINGS
9. REFER TO WINDOW SCHEDULE FOR WINDOW STC RATINGS.
10. REFER TO MECHANICAL, PLUMBING, ELECTRICAL, AND STRUCTURAL DRAWINGS FOR ADDITIONAL INFORMATION.
11. FRAMING SUB-CONTRACTOR SHALL REVIEW AND COORDINATE EXTERIOR LIGHTING AND SIGNAGE LOCATIONS AND SHALL PROVIDE SOLID BLOCKING WHERE REQUIRED.
12. FAÇADE ACCESS PLAN SHALL BE PROVIDED BY OWNER TO COMPLY WITH OSHA REGULATIONS FOR BUILDING MAINTENANCE.
13. CONTRACTOR IS RESPONSIBLE FOR BRINGING ANY CONFLICTS AND/OR DISCREPANCIES TO THE ATTENTION OF THE ARCHITECT.
14. ALL LEVELS ARE TO TOP OF PLYWOOD SUBFLOOR OR TOP OF STRUCTURAL CONCRETE, U.O.N.
15. FOR DOOR AND WINDOW TYPES AND SIZES, SEE SCHEDULES AND LEGENDS ON A9.12, 9.13, 9.20, & 9.21.
16. SEE COLOR ELEVATIONS ON SHEETS A3.00-3.02 FOR PAINT SCHEDULE.

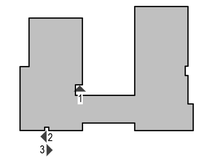

0' 4' 8' 16' 32'

SCALE: 1/8" = 1'-0"

PYATOK
1611 TELEGRAPH AVE.
SUITE 200
OAKLAND, CA 94612
T. 510.465.7010 | F. 510.465.8575
www.pyatok.com

THE UNITY COUNCIL
1900 FRUITVALE AVE
#2A
OAKLAND, CA 94601

2700 INTERNATIONAL

OAKLAND, CA 94601

STAMP:

LICENSED ARCHITECT
PETER WALLER
C-23557
RENEWAL DATE
4/30/2023
STATE OF CALIFORNIA

ISSUE SCHEDULE

100 SD	5/11/22
50 DD	7/15/22
100 DD	9/16/22
50 CD	11/18/22
PERMIT SET	12/09/22

REVISION SCHEDULE

NO.	ISSUE	DATE

JOB NUMBER:	1937
DRAWN BY:	MA, DV, TN, MO, SP
CHECKED BY:	Checker
ISSUE DATE:	12/09/22
SCALE:	As indicated

TITLE:

PARTIAL ELEVATIONS

SHEET:

A3.06

PRELIMINARY - Not for Construction -

© 2019 PYATOK ARCHITECTURE & URBAN DESIGN

12/8/2022 6:08:32 PM

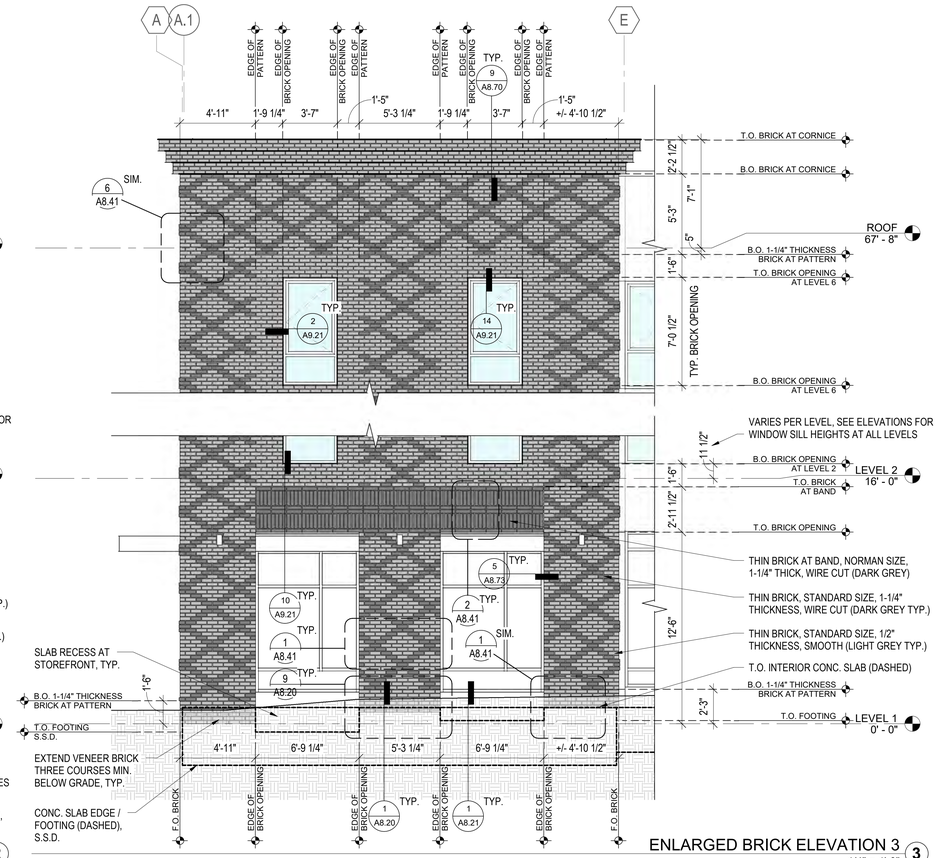

PYATOK
1611 TELEGRAPH AVE.
SUITE 200
OAKLAND, CA 94612
T. 510.465.7010 | F. 510.465.8575
www.pyatok.com

THE UNITY COUNCIL
1900 FRUITVALE AVE
#2A
OAKLAND, CA 94601

2700 INTERNATIONAL
OAKLAND, CA 94601

STAMP:

LICENSED ARCHITECT
PETER WALLER
C-35554
4/30/2023
STATE OF CALIFORNIA

ISSUE SCHEDULE

100 SD	5/11/22
50 DD	7/15/22
100 DD	9/16/22
50 CD	11/18/22
PERMIT SET	12/09/22

REVISION SCHEDULE

NO.	ISSUE	DATE

JOB NUMBER:	1937
DRAWN BY:	MA, DV, TN, MO, SP
CHECKED BY:	Checker
ISSUE DATE:	12/09/22
SCALE:	1/4" = 1'-0"

TITLE:
ENLARGED BRICK ELEVATIONS

SHEET:
A3.10

PRELIMINARY - Not for Construction -

© 2019 PYATOK ARCHITECTURE & URBAN DESIGN

12/8/2022 6:08:43 PM

BUILDING SECTION @ GL 16-13 (2)
1/8" = 1'-0"

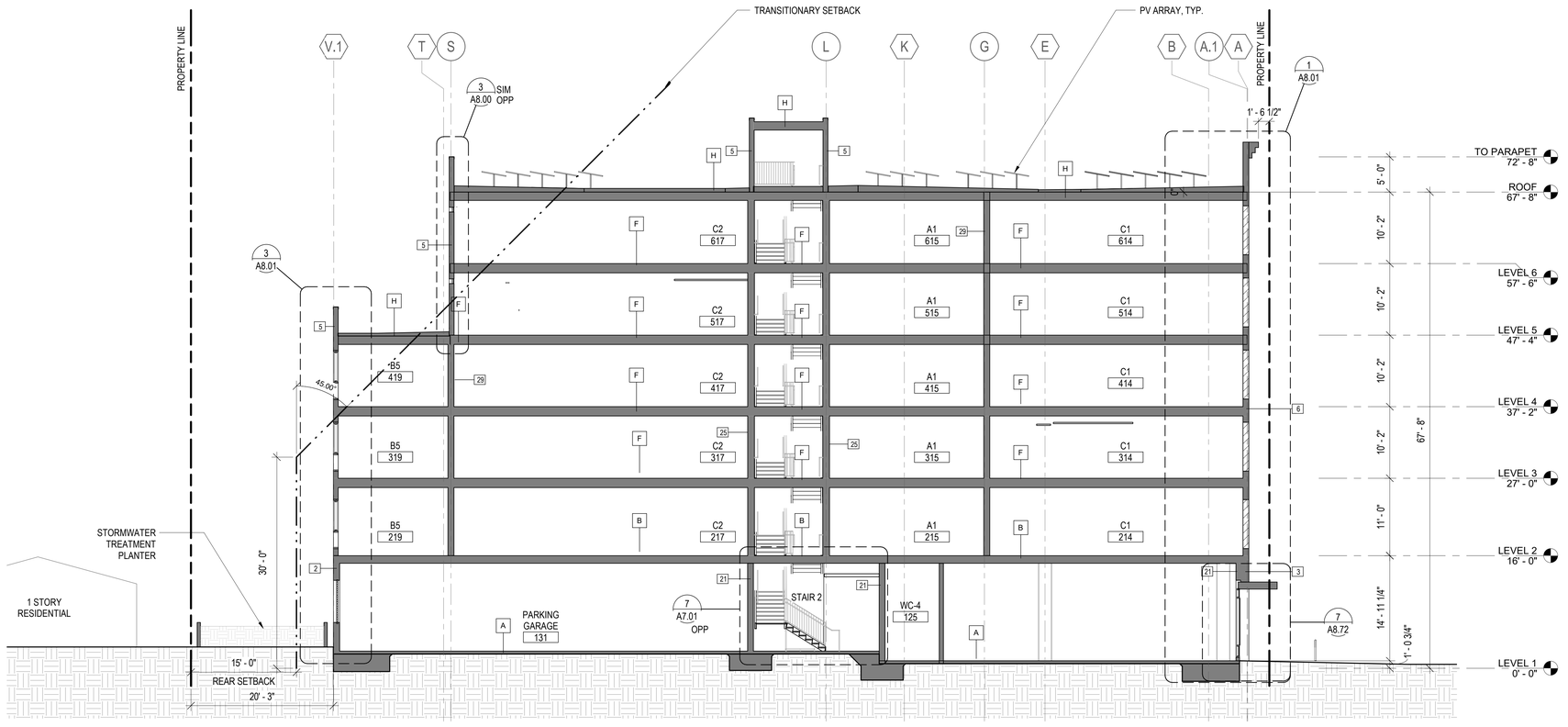

BUILDING SECTION- @ GL 6-4 (1)
1/8" = 1'-0"

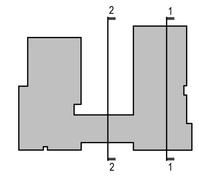

0' 4' 8' 16' 32'
SCALE: 1/8" = 1'-0"

PYATOK
1611 TELEGRAPH AVE.
SUITE 200
OAKLAND, CA 94612
T. 510.465.7010 | F. 510.465.8575
www.pyatok.com

THE UNITY COUNCIL
1900 FRUITVALE AVE
#2A
OAKLAND, CA 94601

2700 INTERNATIONAL
OAKLAND, CA 94601

STAMP:
PETER WALLER
C-23551
4/30/2023

ISSUE SCHEDULE

100 SD	5/11/22
50 DD	7/15/22
100 DD	9/16/22
50 CD	11/18/22
PERMIT SET	12/09/22

REVISION SCHEDULE

NO.	ISSUE	DATE

JOB NUMBER:	1937
DRAWN BY:	MA, DV, TN, MO, SP
CHECKED BY:	Checker
ISSUE DATE:	12/09/22
SCALE:	As indicated

TITLE:
BUILDING SECTIONS

SHEET:
A3.20

PRELIMINARY - Not for Construction -

© 2019 PYATOK ARCHITECTURE & URBAN DESIGN

12/8/2022 6:08:47 PM

PYATOK
1611 TELEGRAPH AVE.
SUITE 200
OAKLAND, CA 94612
T. 510.465.7010 | F. 510.465.8575
www.pyatok.com

THE UNITY COUNCIL
1900 FRUITVALE AVE
#2A
OAKLAND, CA 94601

2700 INTERNATIONAL

OAKLAND, CA 94601

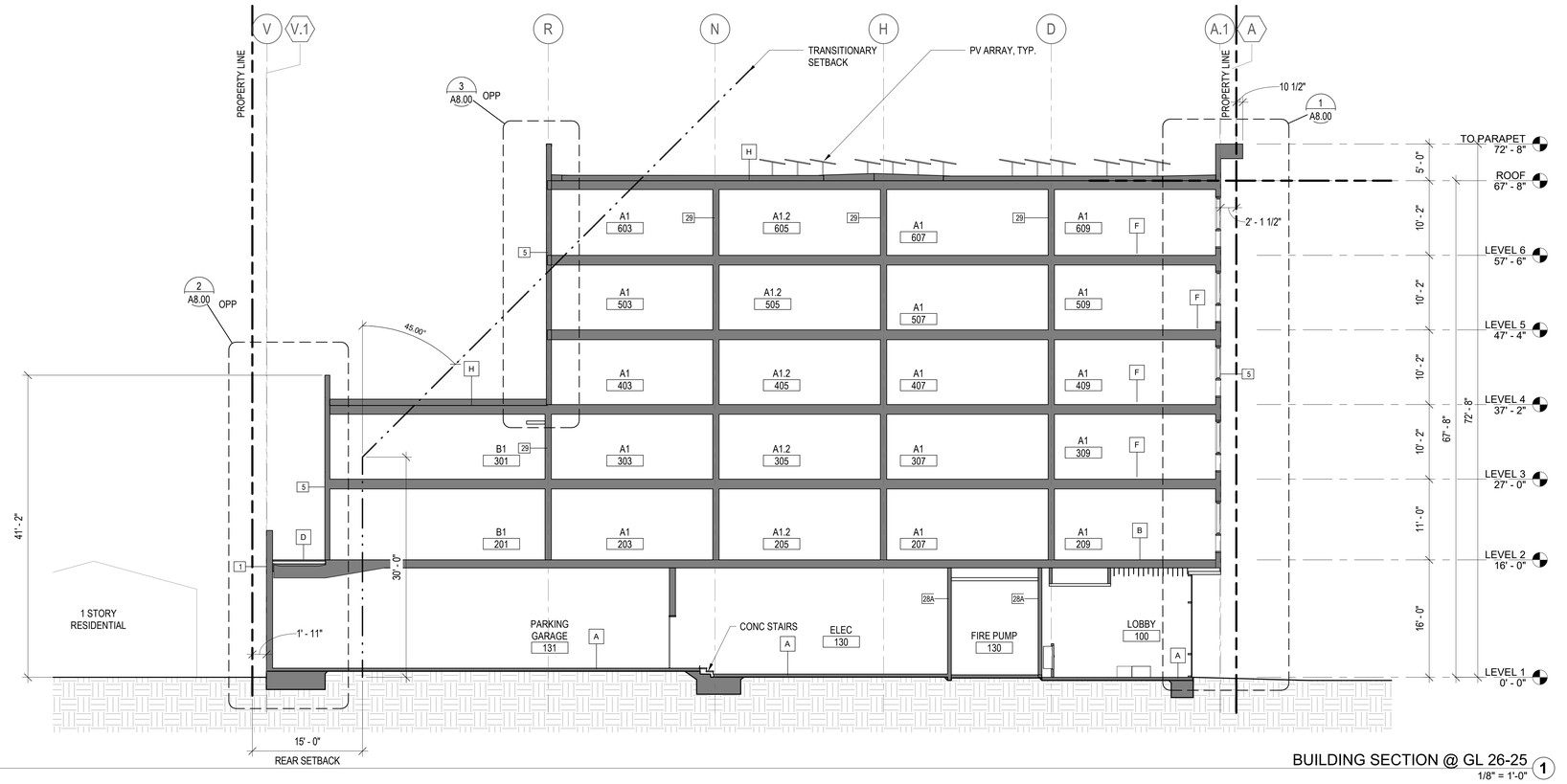

BUILDING SECTION @ GL 26-25 (1)
1/8" = 1'-0"

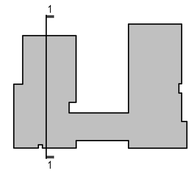

STAMP:

LICENSED ARCHITECT
PETER WALLER
C-23554
4/30/2023
STATE OF CALIFORNIA

ISSUE SCHEDULE

100 SD	5/11/22
50 DD	7/15/22
100 DD	9/16/22
50 CD	11/18/22
PERMIT SET	12/09/22

REVISION SCHEDULE

NO.	ISSUE	DATE

JOB NUMBER:	1937
DRAWN BY:	MA, DV, TN, MO, SP
CHECKED BY:	Checker
ISSUE DATE:	12/09/22
SCALE:	As indicated

TITLE:
BUILDING SECTIONS

SHEET:
A3.21

PRELIMINARY - Not for Construction -

© 2019 PYATOK ARCHITECTURE & URBAN DESIGN

12/8/2022 6:08:49 PM

BUILDING SECTION @ GL T-Q (2)
1/8" = 1'-0"

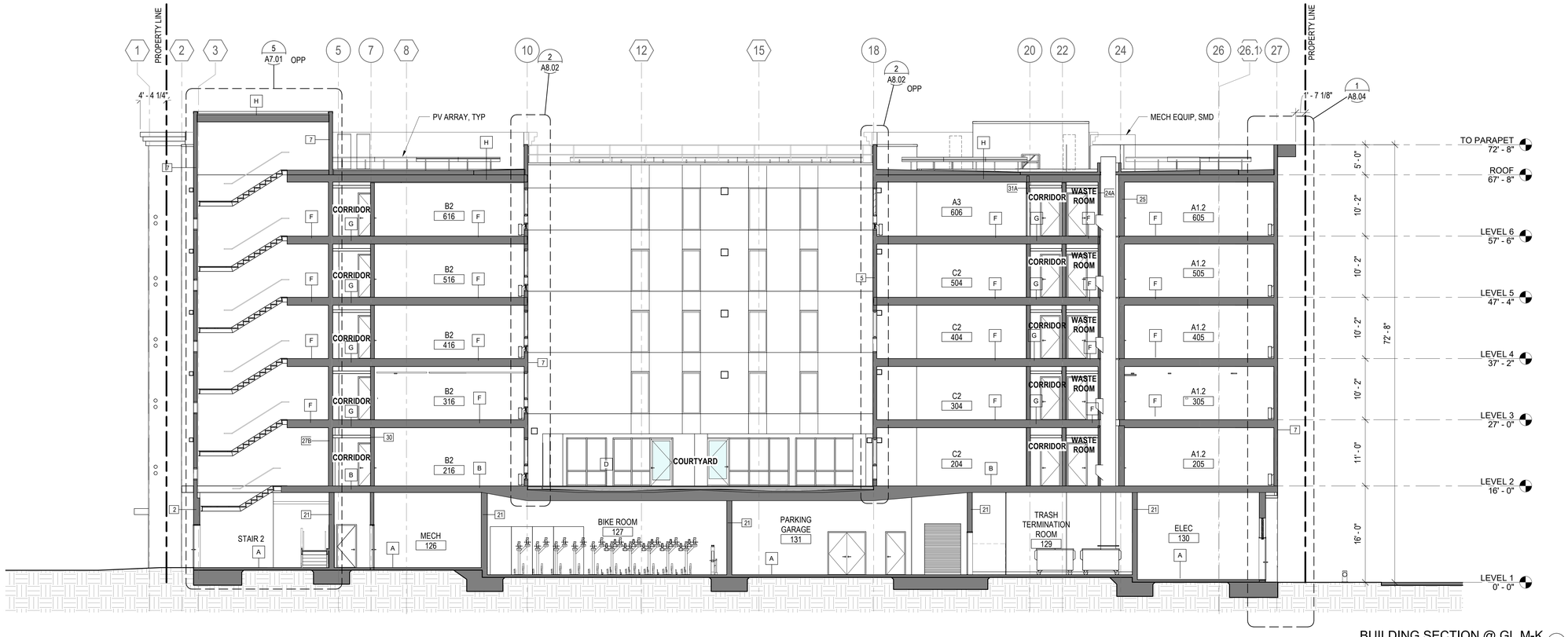

BUILDING SECTION @ GL M-K (1)
1/8" = 1'-0"

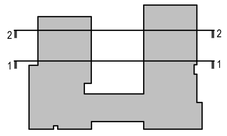

0' 4' 8' 16' 32'
SCALE: 1/8" = 1'-0"

12/8/2022 6:08:55 PM

PYATOK
1611 TELEGRAPH AVE.
SUITE 200
OAKLAND, CA 94612
T. 510.465.7010 | F. 510.465.8575
www.pyatok.com

THE UNITY COUNCIL
1900 FRUITVALE AVE
#2A
OAKLAND, CA 94601

2700 INTERNATIONAL
OAKLAND, CA 94601

STAMP:
PETER WALLER
C-23551
4/30/2023

ISSUE SCHEDULE

100 SD	5/11/22
50 DD	7/15/22
100 DD	9/16/22
50 CD	11/18/22
PERMIT SET	12/09/22

REVISION SCHEDULE

NO.	ISSUE	DATE

JOB NUMBER:	1937
DRAWN BY:	MA, DV, TN, MO, SP
CHECKED BY:	Checker
ISSUE DATE:	12/09/22
SCALE:	As indicated

TITLE:
BUILDING SECTIONS

SHEET:
A3.22

PRELIMINARY - Not for Construction -

© 2019 PYATOK ARCHITECTURE & URBAN DESIGN

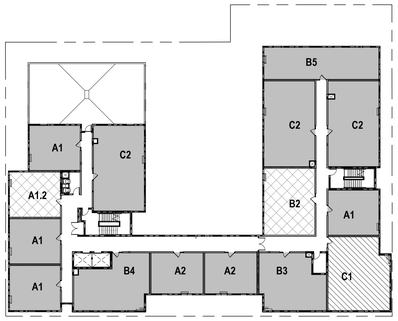

UNIT ACCESSIBILITY DISTRIBUTION - LEVEL 4 (3)
1" = 30'-0"

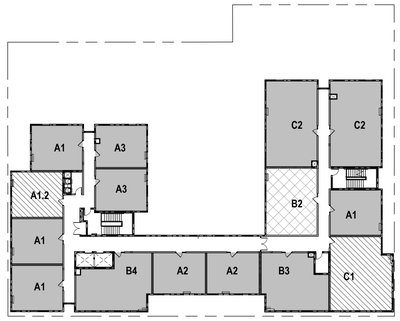

UNIT ACCESSIBILITY DISTRIBUTION - LEVEL 6 (5)
1" = 30'-0"

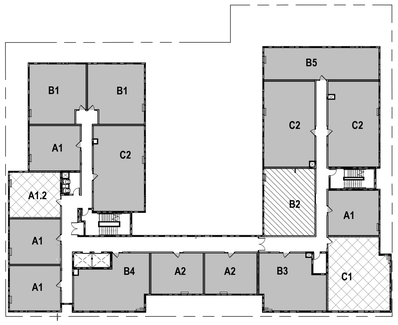

UNIT ACCESSIBILITY DISTRIBUTION - LEVEL 3 (2)
1" = 30'-0"

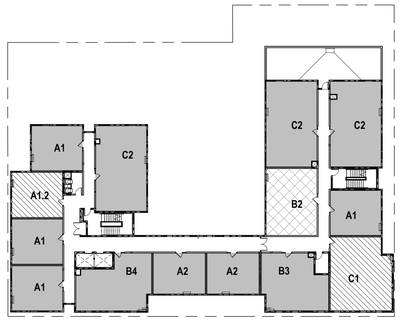

UNIT ACCESSIBILITY DISTRIBUTION - LEVEL 5 (4)
1" = 30'-0"

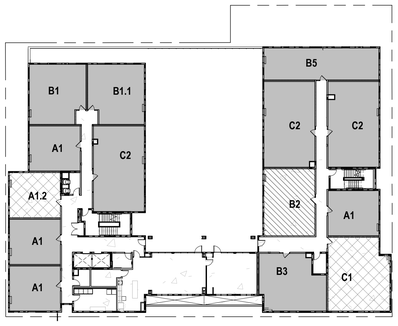

UNIT ACCESSIBILITY DISTRIBUTION - LEVEL 2 (1)
1" = 30'-0"

ACCESSIBILITY

- ADAPTABLE
- COMMUNICATIONS / MOBILITY ACCESSIBLE
- MOBILITY ACCESSIBLE

UNIT ACCESSIBILITY TYPE				
UNIT NUMBER	UNIT TYPE	ACCESSIBILITY TYPE	UNIT AREA	SHEET NUMBER
LEVEL 2				
201	B1	ADAPTABLE	772 SF	A4.05
202	B1.1	ADAPTABLE	772 SF	A4.05
203	A1	ADAPTABLE	546 SF	A4.01
204	C2	ADAPTABLE	1,033 SF	A4.11
205	A1.2	COMMUNICATIONS / MOBILITY ACCESSIBLE	546 SF	A4.02
207	A1	ADAPTABLE	546 SF	A4.01
209	A1	ADAPTABLE	546 SF	A4.01
213	B3	ADAPTABLE	820 SF	A4.07
214	C1	COMMUNICATIONS / MOBILITY ACCESSIBLE	1,038 SF	A4.10
215	A1	ADAPTABLE	545 SF	A4.01
216	B2	MOBILITY ACCESSIBLE	811 SF	A4.06
217	C2	ADAPTABLE	1,029 SF	A4.11
218	C2	ADAPTABLE	1,032 SF	A4.11
219	B5	ADAPTABLE	876 SF	A4.09
LEVEL 3				
301	B1	ADAPTABLE	772 SF	A4.05
302	B1	ADAPTABLE	772 SF	A4.05
303	A1	ADAPTABLE	546 SF	A4.01
304	C2	ADAPTABLE	1,033 SF	A4.11
305	A1.2	COMMUNICATIONS / MOBILITY ACCESSIBLE	546 SF	A4.02
307	A1	ADAPTABLE	546 SF	A4.01
309	A1	ADAPTABLE	546 SF	A4.01
310	B4	ADAPTABLE	862 SF	A4.08
311	A2	ADAPTABLE	507 SF	A4.03
312	A2	ADAPTABLE	507 SF	A4.03
313	B3	ADAPTABLE	820 SF	A4.07
314	C1	COMMUNICATIONS / MOBILITY ACCESSIBLE	1,038 SF	A4.10
315	A1	ADAPTABLE	545 SF	A4.01
316	B2	MOBILITY ACCESSIBLE	813 SF	A4.06
317	C2	ADAPTABLE	1,029 SF	A4.11
318	C2	ADAPTABLE	1,032 SF	A4.11
319	B5	ADAPTABLE	876 SF	A4.09
LEVEL 4				
403	A1	ADAPTABLE	546 SF	A4.01
404	C2	ADAPTABLE	1,033 SF	A4.11
405	A1.2	COMMUNICATIONS / MOBILITY ACCESSIBLE	546 SF	A4.02
407	A1	ADAPTABLE	546 SF	A4.01
409	A1	ADAPTABLE	546 SF	A4.01
410	B4	ADAPTABLE	862 SF	A4.08
411	A2	ADAPTABLE	507 SF	A4.03
412	A2	ADAPTABLE	507 SF	A4.03
413	B3	ADAPTABLE	820 SF	A4.07
414	C1	MOBILITY ACCESSIBLE	1,038 SF	A4.10
415	A1	ADAPTABLE	545 SF	A4.01
416	B2	COMMUNICATIONS / MOBILITY ACCESSIBLE	811 SF	A4.06
417	C2	ADAPTABLE	1,029 SF	A4.11
418	C2	ADAPTABLE	1,032 SF	A4.11
419	B5	ADAPTABLE	876 SF	A4.09
LEVEL 5				
503	A1	ADAPTABLE	546 SF	A4.01
504	C2	ADAPTABLE	1,033 SF	A4.11
505	A1.2	MOBILITY ACCESSIBLE	546 SF	A4.02
507	A1	ADAPTABLE	546 SF	A4.01
509	A1	ADAPTABLE	546 SF	A4.01
510	B4	ADAPTABLE	862 SF	A4.08
511	A2	ADAPTABLE	507 SF	A4.03
512	A2	ADAPTABLE	507 SF	A4.03
513	B3	ADAPTABLE	820 SF	A4.07
514	C1	MOBILITY ACCESSIBLE	1,038 SF	A4.10
515	A1	ADAPTABLE	545 SF	A4.01
516	B2	COMMUNICATIONS / MOBILITY ACCESSIBLE	811 SF	A4.06
517	C2	ADAPTABLE	1,029 SF	A4.11
518	C2	ADAPTABLE	1,032 SF	A4.11
LEVEL 6				
603	A1	ADAPTABLE	546 SF	A4.01
604	A3	ADAPTABLE	503 SF	A4.04
605	A1.2	MOBILITY ACCESSIBLE	546 SF	A4.02
606	A3	ADAPTABLE	508 SF	A4.04
607	A1	ADAPTABLE	546 SF	A4.01
609	A1	ADAPTABLE	546 SF	A4.01
610	B4	ADAPTABLE	862 SF	A4.08
611	A2	ADAPTABLE	507 SF	A4.03
612	A2	ADAPTABLE	507 SF	A4.03
613	B3	ADAPTABLE	820 SF	A4.07
614	C1	MOBILITY ACCESSIBLE	1,038 SF	A4.10
615	A1	ADAPTABLE	545 SF	A4.01
616	B2	COMMUNICATIONS / MOBILITY ACCESSIBLE	811 SF	A4.06
617	C2	ADAPTABLE	1,029 SF	A4.11
618	C2	ADAPTABLE	1,032 SF	A4.11
TOTAL UNITS: 75				

UNIT MIX					
LEVEL	STUDIO	1BR	2BR	3BR	TOTAL
1	-			-	
2	0	7	6	3	16
3	0	7	6	4	17
4	0	7	3	4	14
5	0	7	3	4	14
6	0	7	3	4	14
TOTAL	0	35	21	19	75
% MIX	0%	47%	28%	25%	

KITCHEN NOTES

GENERAL NOTES

1. PROVIDE BLOCKING FOR ALL WALL-HUNG UNITS, ADJUSTABLE HEIGHT CABINETRY, MILLWORK AND ACCESSORIES.

2. REFERENCE UNIT PLANS AND REFLECTED CEILING PLANS FOR EXTENT AND LOCATION OF GYPSUM BOARD SOFFITS.

3. PROVIDE WATERLINE TO REFRIGERATOR LOCATIONS FOR ICE MAKER WHERE SHOWN.

4. AT ADAPTABLE UNITS, PROVIDE 30" x 48" CLEAR FLOOR SPACE CONFIGURED FOR FORWARD OR PARALLEL APPROACH CENTERED ON EACH SINK, DISHWASHER, REFRIGERATOR, AND WORKSURFACE. PROVIDE PARALLEL APPROACH AT RANGE.

5. ACCESSIBLE UNITS PROVIDE 30" x 48" CLEAR FLOOR SPACE CONFIGURED FOR PARALLEL APPROACH AT REFRIGERATOR, 30" x 48" CLEAR FLOOR SPACE CONFIGURED FOR FORWARD OR PARALLEL APPROACH CENTERED ON EACH SINK, DISHWASHER. WORK SURFACE TO BE PROVIDED ADJACENT TO RANGE. DISHWASHER TO BE ADJACENT TO SINK CABINET.

ACCESSIBILITY NOTES

1. REMOVABLE CABINETS
AT ALL ADAPTABLE UNITS & ACCESSIBLE UNITS BASE CABINETS AT KITCHEN SINKS, INCLUDING TOE BOARD & SHELVING SHALL BE REMOVABLE WITHOUT USE OF SPECIALIZED TOOLS OR SPECIALIZED KNOWLEDGE TO PROVIDE 30" MIN. CLEARANCE FOR WHEELCHAIRS. PROVIDE FINISHED CABINET SIDE PANELS, AND CONTINUOUS FLOORING & WALL FINISHES UNDER & BEHIND INDICATED LENGTH OF REMOVABLE BASE CABINETS. SEE DETAIL 6/A10.11.

2. PIPES AT SINK
HOT WATER & DRAIN PIPES ACCESSIBLE UNDER SINKS SHALL BE INSULATED OR OTHERWISE COVERED. THERE SHALL BE NO SHARP OR ABRASIVE SURFACES UNDER SINKS. SEE DETAIL 3/A10.11

3. FAUCET CONTROLS
SINKS SHALL BE PROVIDED WITH FAUCET CONTROLS WHICH DO NOT REQUIRE TIGHT GRASPING, PINCHING, OR TWISTING OF THE WRIST, AND CAN BE USED WITH A SINGLE HAND.

4. UFAS ACCESSIBLE UNITS
KITCHENS AT THE FOLLOWING UNITS SHALL MEET UFAS STANDARDS FOR ACCESSIBILITY: UNITS A1.2, B2, & C1.

UFAS ACCESSIBLE UNITS SHALL INCLUDE THE FOLLOWING FEATURES:
(A.) REMOVABLE BASE CABINETS AT KITCHEN SINK AND WORK SURFACE.
(B.) REPOSITIONABLE COUNTERTOP AT KITCHEN SINK AND AT WORK SURFACE, SEE NOTE 5 BELOW FOR COUNTERTOP ACCESSIBILITY.
(C.) LOWEST SHELF AT UPPER CABINET SHALL BE LOCATED AT 48" A.F.F.

5. COUNTERTOP ACCESSIBILITY
COUNTERTOPS SHALL INCLUDE A MIN. 30" WIDTH AT KITCHEN SINK AND 30" MIN. WIDTH WORK SURFACE. PROVIDE FINISHED SIDES AT CABINETS ON EITHER END OF A REMOVABLE COUNTER OR ANY COUNTER @ 2'-10" AFF. OR LOWER. COUNTERTOPS @ SINK & WORK SURFACE NOT REPOSITIONABLE DUE TO USE OF GRANITE MATERIAL & ALLOWED PER CBC 11B-804. SINK & WORK SURFACE @ ALL UFAS UNITS TO BE INSTALLED @ MAX. 2'-10" AFF.-SEE ELEVATIONS IN ALL APPLICABLE UNITS.

6. THE DEPTH OF A SINK BOWL SHALL BE NO GREATER THAN 6-1/2". ONLY ONE BOWL OF A DOUBLE- OR TRIPLE-BOWL SINK NEEDS TO MEET THIS REQUIREMENT.

7. ROUGH-IN PLUMBING SHALL BE LOCATED TO ACCEPT CONNECTIONS OF SUPPLY AND DRAIN PIPES FOR SINKS MOUNTED AT THE HEIGHT OF 28" A.F.F.

UNIT PLAN LEGEND

SEE GRAPHIC SYMBOLS LEGEND ON COVER SHEET FOR SYMBOLS NOT SHOWN BELOW.

- 2 HOUR RATED WALLS
- 1 HOUR RATED WALLS
- VERTICAL RATED SHAFT
- VERTICAL CHASE
- CLEAR FLOOR AREA AT DOORS AND APPROACH TO FIXTURES AND APPLIANCES
- (FS) FLOOR SINK - SEE PLUMBING DRAWINGS
- (FD) FLOOR DRAIN - SEE PLUMBING DRAWINGS - MAX SLOPE TO DRAIN 1/8" PER FOOT, U.O.N.
- XX-X XX-X MATERIAL TRANSITION, SEE FINISH SCHEDULE AND MATERIALS KEY
- FINISH MATERIAL, SEE FINISH SCHEDULE AND APPENDIX A

UNIT - KITCHEN & BATH NOTES

1. SEE G0.36 FOR INFORMATION RELATED TO ACCESSIBILITY IN KITCHENS AND BATHROOMS IN BOTH ADAPTABLE AND ACCESIBLE UNITS AND COMMON AREAS.
2. PROVIDE BLOCKING FOR ALL ADJUSTABLE HEIGHT AND WALL-HUNG CABINETRY, GRAB BARS, MILLWORK AND ACCESSORIES. FOR GRAB BAR LOCATIONS AND BLOCKING REQUIRED IN ADAPTABLE AND ACCESSIBLE BATHROOMS, REFER TO G0.32 SHEETS.
3. PROVIDE GRAB BAR BLOCKING AT ALL DWELLING UNIT BATHROOM TOILETS SHOWERS AND TUBS. PROVIDE BLOCKING FOR FOLD-DOWN GRAB BARS AT ALL TOILETS WHEN ADJACENT TO TUBS. NOTE THAT NOT ALL BLOCKING IS SHOWN ON ALL INTERIOR ELEVATIONS.
4. REFERENCE UNIT PLANS AND REFLECTED CEILING PLANS FOR EXTENT AND LOCATION OF GYPSUM BOARD SOFFITS.
5. PIPE CHASES BEHIND TUB BULKHEADS ARE NOT REQUIRED TO BE SPRINKLERED PER NFPA 13: 5-13.1 EXCEPTION 12. SUCH PIPE CHASES SHALL BE LESS THAN 10 SQUARE FEET IN AREA AND FORMED BY STUDS OR WOOD JOISTS. PIPE CHASES SHALL BE FIRE-STOPPED AT EACH FLOOR USING MATERIALS EQUIVALENT TO THE FLOOR CONSTRUCTION. PIPE PENETRATIONS AT EACH FLOOR SHALL BE PROPERLY SEALED. PIPE CHASES SHALL CONTAIN NO SOURCES OF IGNITION. PIPING SHALL BE NON-COMBUSTIBLE.
6. REMOVABLE CABINETS - AT ALL ADAPTABLE UNITS & ACCESSIBLE UNITS BASE CABINETS AT KITCHEN SINKS AND WORK SURFACES, INCLUDING TOE BOARD & SHELVING SHALL BE REMOVABLE WITHOUT USE OF SPECIALIZED TOOLS OR SPECIALIZED KNOWLEDGE TO PROVIDE 30" MIN. CLEARANCE. PROVIDE FINISHED CABINET SIDE PANELS, AND CONTINUOUS FLOORING & WALL FINISHES UNDER & BEHIND INDICATED LENGTH OF REMOVABLE BASE CABINETS.
7. PIPES AT SINK - HOT WATER & DRAIN PIPES ACCESSIBLE UNDER SINKS SHALL BE INSULATED OR OTHERWISE COVERED. THERE SHALL BE NO SHARP OR ABRASIVE SURFACES UNDER SINKS. SEE DETAIL 2/A10.11.
8. FAUCET CONTROLS - SINKS SHALL BE PROVIDED WITH FAUCET CONTROLS WHICH DO NOT REQUIRE TIGHT GRASPING, PINCHING, OR TWISTING OF THE WRIST, AND CAN BE USED WITH A SINGLE HAND.
9. COUNTERTOPS - AT ALL ADAPTABLE AND ACCESSIBLE UNITS, COUNTERTOPS SHALL INCLUDE A MIN. 30" WIDTH AT KITCHEN SINK AND 30" MIN. WIDTH WORK SURFACE.
10. SINK & WORK SURFACE. COUNTERTOPS AT SINK & WORK SURFACE NOT REPOSITIONABLE DUE TO USE OF SOLID-SURFACE MATERIAL & ALLOWED PER CBC 1133A.4.1. EXC. 1.
11. BREADBOARDS ARE ACCEPTABLE IN LIEU OF 30" WORK SURFACE. PROVIDE TWO 15" MINIMUM WIDE BREADBOARDS INSIDE TOP OF DRAWER OF BASE CABINET WHERE INDICATED.
12. COUNTERTOPS TO BE 24" MAX DEPTH INCLUDING BACKSLPASH. CABINETS TO BE 23" MAX DEPTH
13. AT ACCESSIBLE UNITS, THE DEPTH OF A KITCHEN SINK BOWL SHALL BE NO GREATER THAN 6 1/2".
14. HEIGHT AND LOCATION OF TYPICAL KITCHEN OUTLETS TO BE MAXIMUM 46" H. MEASURED FROM FINISH FLOOR TO THE TOP OF THE OUTLET BOX AND TO BE LOCATED AT LEAST 36" FROM CORNER COUNTERTOP CONDITIONS (L-SHAPE AND U-SHAPE KITCHENS). SEE DETAIL 1/A10.11.
15. THE TOP OF THE LAVATORY SHALL BE NO MORE THAN 2'-10" A.F.F.PENINGS INTO THE BUILDING AND PROPERTY LINES.

UNIT RCP LEGEND

- FINISHED CEILING ELEVATION ABOVE FINISHED FLOOR
- DROPPED GYP. BD. CEILING ON MTL. FRAMING
- GYP. BD. CLNG. @ UNDERSIDE OF RATED FLOOR/CEILING ASSEMBLY
- SHAFT OPENING, S.M.D.
- CEILING LIGHT FIXTURE, S.E.D.
- COMBINATION BATH FAN/LIGHT COMBO, S.M.D.
- FRESH AIR INTAKE/EXHAUST, S.M.D.
- XX'-XX" A.F.F. CEILING HEIGHT ABOVE FINISH FLOOR

UNIT PLAN GENERAL NOTES

1. REFER TO TITLE SHEET G0.00 FOR SYMBOLS AND ABBREVIATIONS. SEE SHEETS G0.34 FOR ADDITIONAL CODE REFERENCED DIAGRAMS.

2. ALL DIMENSIONS ARE TO FACE OF MASONRY, CONCRETE, AND STUD, OR CENTERLINE OF COLUMN OR DEMISING WALL. DIMENSIONS NOTED AS 'CLEAR' ARE TO FINISH FACE OF WALL, U.O.N.

3. CONTRACTOR IS RESPONSIBLE FOR BRINGING ANY CONFLICTS AND/OR DISCREPANCIES TO THE ATTENTION OF THE ARCHITECT

4. REFER TO G SERIES SHEETS FOR ACCESSIBILITY NOTES AND REQUIREMENTS. REFER G0.35 SHEETS FOR KITCHEN AND BATHROOM ACCESSIBILITY INFORMATION. CLEARANCES ARE TO FACE OF FINISH SURFACES

5. TYPICAL PASSAGE DOORS ARE 3'-0" WIDE AND PROVIDED WITH COMPLIANT LEVER HARDWARE.

6. WHERE CLOSETS ARE REACH-IN ONLY, THEY COMPLY WITH REACH RANGE LIMITATIONS PER ACCESSIBILITY DIAGRAMS, SHEET G0.32.

7. CONTRACTOR TO VERIFY TUB/SHOWER ENCLOSURE DIMENSIONS WITH MANUFACTURER PRIOR TO FRAMING.

8. REFER TO BUILDING PLANS FOR FIRE BARRIER AND FIRE WALL LOCATIONS.

9. TYPICAL WALL ASSEMBLIES REFERENCED ON UNIT PLAN SHEETS. SEE ASSEMBLIES ON SHEET A9.00 & A9.01 FOR ADDITIONAL INFORMATION.

10. UNIT PLANS SHOWN ARE TYPICAL; REFER TO OVERALL BUILDING PLANS A2.01-A2.07 TO VERIFY VARYING PERIMETER CONDITIONS, EXTERIOR DOOR AND WINDOW DIMENSIONS, CONDITIONS OR LOCATIONS. REFER TO OVERALL REFLECTED CEILING PLANS A6.01-A6.06 FOR CEILING SOFFITS.

11. SEE SHEET A4.0 SERIES FOR ENLARGED TYPICAL KITCHEN AND BATHROOM FLOOR PLANS.

12. PROVIDE MINIMUM (1) 24" LONG TOWEL BAR PER BATHROOM, MOUNTED AT 44" MAXIMUM ABOVE FINISH FLOOR. PROVIDE SOLID BACKING WHERE REQUIRED.

13. WHERE OCCURS, VERIFY WING WALL LENGTH WITH REFRIGERATOR MANUFACTURER TO ENSURE 135-DEGREE REFRIGERATOR DOOR SWING IS UNOBSTRUCTED.

14. PROVIDE ALL NECESSARY CEILING OR WALL ACCESS PANELS AS REQUIRED FOR AIR CONDITIONING, PLUMBING, FIRE SPRINKLER, AND ELECTRICAL SYSTEMS. IN FIRE-RATED ASSEMBLIES PROVIDE RATED ACCESS PANELS WITH SELF-CLOSING DEVICES.

15. EVERY DWELLING UNIT MUST BE PROVIDED WITH SMOKE ALARM DEVICES ON BOTH SIDES OF BEDROOM DOORS. REFER TO PLANS AND ELECTRICAL DRAWINGS.

16. SEE ELECTRICAL DRAWINGS FOR OUTLET TYPES AND LOCATIONS. OUTLET AND THERMOSTATS TO MEET THE FOLLOWING REQUIREMENTS:

16.1. (A) THE HEIGHT OF THE THERMOSTAT TO BE MAXIMUM 48" A.F.F. AS MEASURED TO THE HIGHEST CONTROL.
16.2. (B) HEIGHT OF TYPICAL FLOOR OUTLET TO BE MINIMUM 15" A.F.F. TO THE BOTTOM OF THE BOX (NOT THE CENTERLINE).
16.3. (C) HEIGHT AND LOCATION OF TYPICAL KITCHEN OUTLETS TO BE MAXIMUM 46" H. MEASURED FROM FINISH FLOOR TO THE TOP OF THE OUTLET BOX AND TO BE LOCATED AT LEAST 36" FROM INSIDE CORNER COUNTERTOP CONDITIONS (L-SHAPE AND U-SHAPE KITCHENS) IN ORDER TO PROVIDE CLEAR FLOOR SPACE FOR A WHEELCHAIR USER TO REACH THE OUTLET.

17. FOR CHASE AND SHAFT PLANS, SEE SHEETS A8.00 - A8.03.

18. OPERABLE PORTIONS OF ANY WINDOW MUST BE 3'-0" MINIMUM AWAY FROM ANY UNIT EXHAUST VENT OR DUCT. EXHAUST DUCTS SHALL TERMINATE A MINIMUM OF 3'-0" FROM OPENINGS INTO THE BUILDING AND PROPERTY LINES.

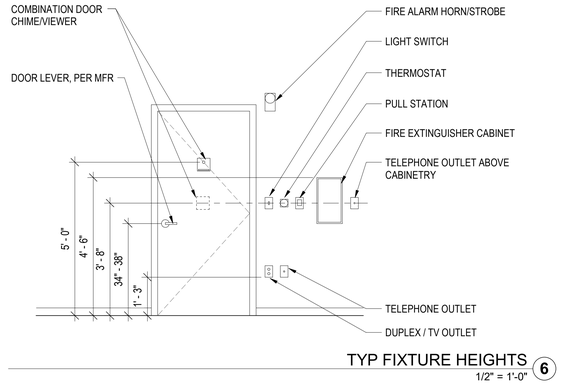

TYP FIXTURE HEIGHTS (6)
1/2" = 1'-0"

PYATOK
1611 TELEGRAPH AVE.
SUITE 200
OAKLAND, CA 94612
T. 510.465.7010 | F. 510.465.8575
www.pyatok.com

THE UNITY COUNCIL
1900 FRUITVALE AVE
#2A
OAKLAND, CA 94601

2700 INTERNATIONAL
OAKLAND, CA 94601

STAMP:
LICENSED ARCHITECT
PETER WALLER
C-23554
4/30/2023
STATE OF CALIFORNIA

ISSUE SCHEDULE

100 SD	5/11/22
50 DD	7/15/22
100 DD	9/16/22
50 CD	11/18/22
PERMIT SET	12/09/22

REVISION SCHEDULE

NO.	ISSUE	DATE

JOB NUMBER:	1937
DRAWN BY:	MA, DV, TN, MO, SP
CHECKED BY:	Checker
ISSUE DATE:	12/09/22
SCALE:	As indicated

TITLE:
UNIT PLAN - GENERAL NOTES, INFO

SHEET:
A4.00

PRELIMINARY - Not for Construction -

© 2019 PYATOK ARCHITECTURE & URBAN DESIGN

12/8/2022 6:09:06 PM

KEYNOTE LEGEND	
#	KEYNOTE
10-28A	TOILET PAPER HOLDER, LOCATED PER CBC 11B-604.9.6 @ MOBILITY ACCESSIBLE UNITS
10-28B	TOWEL BAR, MOUNT AT 40" MAX. A.F.F. - PROVIDE BLOCKING
10-28C	MIRROR
10-28D	RECESSED MEDICINE CABINET
11-31B	ADAPTABLE ELECTRIC RANGE
11-31C	RANGE HOOD
12-35A	CASEWORK: BATH VANITY SINK CABT., 21" DEEP W/ REMOVABLE FRONT/BASE
12-35B	CASEWORK: BATH VANITY CABT., 21" DEEP W/ 4 DRAWERS
12-35C	CASEWORK: KIT. SINK BASE CABT., 23" DEEP W/ REMOVABLE FRONT/BASE
12-35F	CASEWORK: KIT. DRAWER BASE CABT., 23" DEEP
12-35H	CASEWORK: KIT. UPPER CABT., 12" DEEP, DOUBLE DOOR, ADJUSTABLE SHELVES (DASHED)
12-35I	CASEWORK: KIT. UPPER CABT., 12" DEEP, SINGLE DOOR, ADJUSTABLE SHELVES (DASHED)
12-35J	CASEWORK: KIT. UPPER CABT., 24" DEEP, ABV. REF., ADJUSTABLE SHELVES (DASHED)
12-35K	CASEWORK: KIT. UPPER CABT., 12" DEEP, ABV. RANGE HOOD OR SINK OR WATERCLOSET
12-36A	COUNTERTOP WITH 4" BACKSPLASH, SEE FINISH SCHEDULE
22-42A	TOILET, 17" MIN. 19" MAX. SEAT HEIGHT, S.P.D.
22-42B	LAVATORY SINK, S.P.D.
22-42D	KITCHEN SINK, S.P.D.
22-48A	BATHTUB, 32" X 60", WITH SHOWER/TUB CONTROLS - PROVIDE BLOCKING FOR GRAB BARS
26-51A	INTERIOR LIGHTING, WALL-MOUNTED LINEAR VANITY LIGHT FIXTURE, S.E.D.
26-51B	INTERIOR LIGHTING, CEILING-MOUNTED LIGHT FIXTURE, S.E.D.
26-51S	INTERIOR LIGHTING, CEILING FAN WITH LIGHT, S.E.D.
DW-1	DISHWASHER
RBH	ROBE HOOK
REF1	REFRIGERATOR

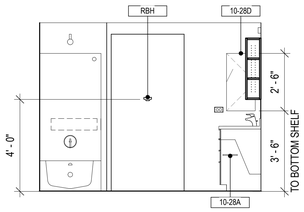

400_A1 - BATH D (8)
3/8" = 1'-0"

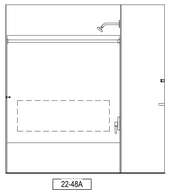

A1 - BATH C (7)
3/8" = 1'-0"

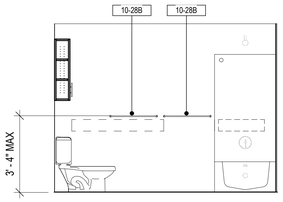

A1 - BATH B (6)
3/8" = 1'-0"

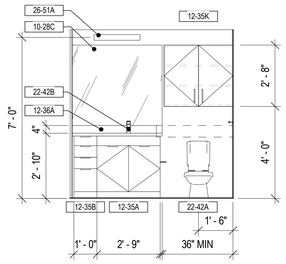

A1 - BATH A (5)
3/8" = 1'-0"

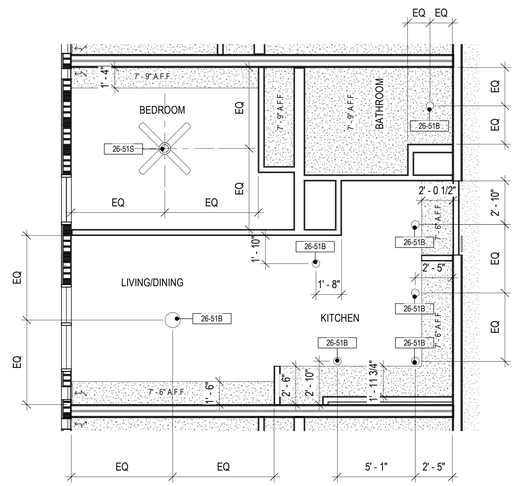

UNIT TYPE A1 - MOBILITY ACCESSIBLE (CBC 11B) - RCP (2)
1/4" = 1'-0"

INTERIOR ELEVATION NOTES

1. PROVIDE BLOCKING FOR ALL WALL-HUNG UNITS, ADJUSTABLE HEIGHT CABINETRY, MILLWORK, GRAB BARS AND ACCESSORIES.
2. SEE UNIT PLANS AND REFLECTED CEILING PLANS FOR EXTENT AND LOCATION OF GYPSUM BOARD SOFFITS.
3. PROVIDE WATERLINE TO REFRIGERATOR LOCATIONS FOR ICE MAKER WHERE SHOWN (SEE PLUMBING DRAWINGS).
4. @ ADAPTABLE UNITS, PROVIDE 30" x 48" CLEAR FLOOR SPACE CONFIGURED FOR FORWARD OR PARALLEL APPROACH CENTERED ON EACH SINK, DISHWASHER, REFRIGERATOR, AND WORKSURFACE. PROVIDE PARALLEL APPROACH AT RANGE.
5. @ ACCESSIBLE UNITS PROVIDE 30" x 48" CLEAR FLOOR SPACE CONFIGURED FOR PARALLEL APPROACH AT REFRIGERATOR, 30" x 48" CLEAR FLOOR SPACE CONFIGURED FOR FORWARD OR PARALLEL APPROACH CENTERED ON EACH SINK, DISHWASHER. WORK SURFACE TO BE PROVIDED ADJACENT TO RANGE. DISHWASHER TO BE ADJACENT TO SINK CABINET
6. PROVIDE ADJUSTABLE SHELVES TO ALL CABINETS, TYP.
7. KITCHEN SOFFITS TO EXTEND TO WITHIN 1" OF UPPER CABINETS.
8. SEE SPECIFICATIONS AND APPLICABLE APPENDICES FOR MORE INFORMATION ON KITCHEN AND BATH FIXTURES, FINISHES AND APPLIANCES.
9. SEE ELECTRICAL DRAWINGS FOR OUTLET TYPES. OUTLETS AND THERMOSTAT LOCATED PER ELEVATIONS ON 6/A4.00 AND G0.35 SHEETS.
10. VERIFY ALL DIMENSIONS IN FIELD PRIOR TO CABINET FABRICATION.
11. EXPOSED SIDES OF CABINETS TO MATCH FINISH AT FACE OF DOOR PANELS. FILLER AND END PANELS TO MATCH FACE OF FINISH AT DOOR PANELS.
12. PROVIDE SCRIBE STRIPS WHERE CABINETS INTERFACE WITH WALLS, CEILINGS OR SOFFITS

FINISH PLAN GENERAL NOTES

1. REFER TO FINISH SCHEDULE ON A10.00 AND FINISH MATERIALS APPENDIX 9 IN SPECIFICATIONS FOR MORE INFORMATION.
2. PROVIDE STRAIGHT, FLUSH BASE AT CARPETED AREAS, MATERIALS AS SCHEDULED, U.O.N.
3. COORDINATE INSTALLATION OF BASE WITH MILLWORK. DO NOT INSTALL BASE WHERE BUILT-IN CABINETS ARE INDICATED.
4. ALL PAINT FINISH OF METAL PARTS SHALL BE SEMI-GLOSS, U.O.N.
5. CARPET CONTRACTOR TO PROVIDE & INSTALL SPECIFIED REDUCTION STRIP AT DOORS WHERE ALL CARPET & RESILIENT FLOORING MEET.
6. FLOAT ALL AREAS WHERE FLOOR IS NOT LEVEL OR TRUE PRIOR TO FLOORING INSTALLATIONS.
7. PROVIDE 1/8" BRUSHED STAINLESS STEEL SCHLUTER STRIP AT CARPET/STONE OR CARPET/CERAMIC TILE THRESHOLD.
8. ALL WALLS TO BE PAINTED PES U.O.N. PROVIDE LEVEL FINISH AT GYPSUM BOARD WALLS AND CEILINGS AREAS, AS IDENTIFIED PER SPECIFICATION SECTION 09 29 00.
9. ALL WALL BASE TO BE WB U.O.N.
10. SEE UNIT PLAN SHEETS FOR UNIT FINISHES AND EXTENT.

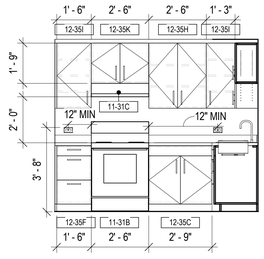

A1 - KITCHEN B (4)
3/8" = 1'-0"

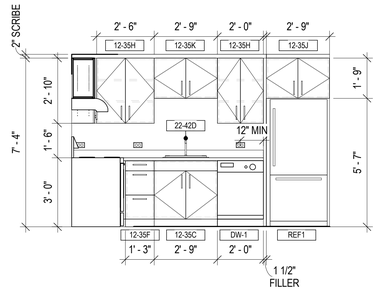

A1 - KITCHEN A (3)
3/8" = 1'-0"

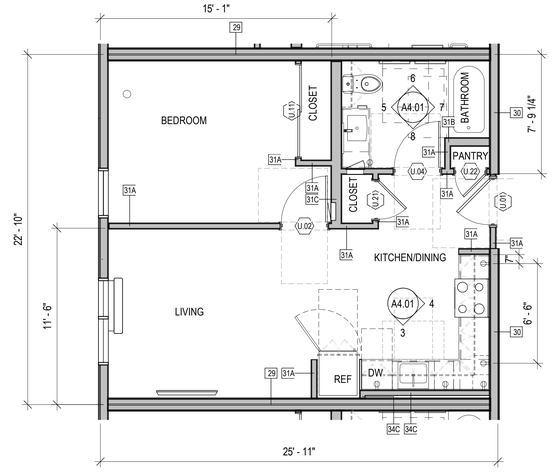

545 GSF
20 UNITS

UNIT TYPE A1 - ADAPTABLE (CBC 11B) (1)
1/4" = 1'-0"

UNIT TYPE LEGEND

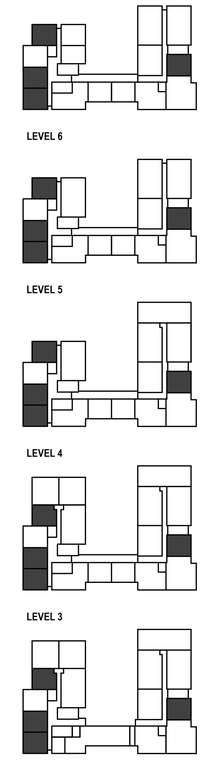

0' 2' 4' 8' 16'

SCALE: 1/4" = 1'-0"

PYATOK
1611 TELEGRAPH AVE.
SUITE 200
OAKLAND, CA 94612
T. 510.465.7010 | F. 510.465.8575
www.pyatok.com

THE UNITY COUNCIL
1900 FRUITVALE AVE
#2A
OAKLAND, CA 94601

2700 INTERNATIONAL

OAKLAND, CA 94601

STAMP:

LICENSED ARCHITECT
PETER WALLER
C-23554
4/30/2023
STATE OF CALIFORNIA

ISSUE SCHEDULE

100 SD	5/11/22
50 DD	7/15/22
100 DD	9/16/22
50 CD	11/18/22
PERMIT SET	12/09/22

REVISION SCHEDULE

NO.	ISSUE	DATE

JOB NUMBER:	1937
DRAWN BY:	MA, DV, TN, MO, SP
CHECKED BY:	Checker
ISSUE DATE:	12/09/22
SCALE:	As indicated

TITLE:
UNIT TYPE A1 - PLANS, ELEVATIONS, RCPS

SHEET:
A4.01

PRELIMINARY - Not for Construction -

© 2019 PYATOK ARCHITECTURE & URBAN DESIGN

12/8/2022 6:09:10 PM

KEYNOTE LEGEND	
#	KEYNOTE
10-28A	TOILET PAPER HOLDER, LOCATED PER CBC 11B-604.9.6 @ MOBILITY ACCESSIBLE UNITS
10-28B	TOWEL BAR, MOUNT AT 40" MAX. A.F.F. - PROVIDE BLOCKING
10-28C	MIRROR
10-28D	RECESSED MEDICINE CABINET
10-28E	TOILET GRAB BAR
10-28G	GRAB BARS - PROVIDE BLOCKING. SEE TS0.31 FOR MORE INFORMATION
11-31C	RANGE HOOD
11-31G	ACCESSIBLE ELECTRIC RANGE
12-35A	CASEWORK: BATH VANITY SINK CABT., 21" DEEP W/ REMOVABLE FRONT/BASE
12-35B	CASEWORK: BATH VANITY CABT., 21" DEEP W/ 4 DRAWERS
12-35C	CASEWORK: KIT. SINK BASE CABT., 23" DEEP W/ REMOVABLE FRONT/BASE
12-35F	CASEWORK: KIT. DRAWER BASE CABT., 23" DEEP
12-35H	CASEWORK: KIT. UPPER CABT., 12" DEEP, DOUBLE DOOR, ADJUSTABLE SHELVES (DASHED)
12-35I	CASEWORK: KIT. UPPER CABT., 12" DEEP, SINGLE DOOR, ADJUSTABLE SHELVES (DASHED)
12-35J	CASEWORK: KIT. UPPER CABT., 24" DEEP, ABV. REF., ADJUSTABLE SHELVES (DASHED)
12-35K	CASEWORK: KIT. UPPER CABT., 12" DEEP, ABV. RANGE HOOD OR SINK OR WATERCLOSET
12-35L	CASEWORK: KIT. PANTRY CABT., 24" DEEP, ADJUSTABLE SHELVES (DASHED)
12-36A	COUNTERTOP WITH 4" BACKSPLASH, SEE FINISH SCHEDULE
22-42A	TOILET, 17" MIN. 19" MAX. SEAT HEIGHT, S.P.D.
22-42B	LAVATORY SINK, S.P.D.
22-42D	KITCHEN SINK, S.P.D.
22-48B	BATHTUB, 32" X 60", WITH SHOWER/TUB CONTROLS - ACCESSIBLE ATTACHED ENCLOSURE WITH GRAB BARS AND SEAT, WITH REMOVABLE SPRAY NOZZLE
26-51A	INTERIOR LIGHTING, WALL-MOUNTED LINEAR VANITY LIGHT FIXTURE, S.E.D.
26-51B	INTERIOR LIGHTING, CEILING-MOUNTED LIGHT FIXTURE, S.E.D.
26-51S	INTERIOR LIGHTING, CEILING FAN WITH LIGHT, S.E.D.
DW-2	ACCESSIBLE DISHWASHER
RBH	ROBE HOOK
REF1	REFRIGERATOR

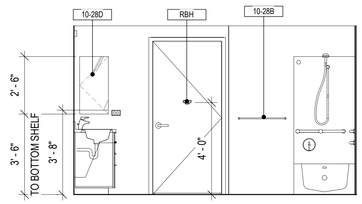

A1.2 - BATH D 8
3/8" = 1'-0"

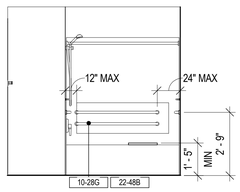

A1.2 - BATH C 7
3/8" = 1'-0"

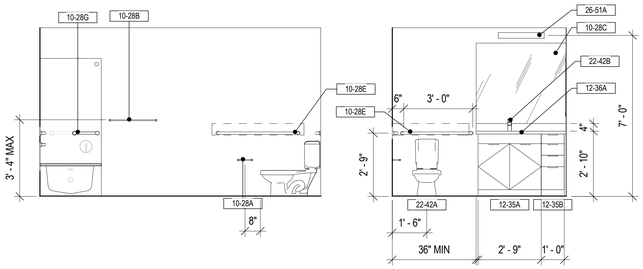

A1.2 - BATH B 6
3/8" = 1'-0"

A1.2 - BATH A 5
3/8" = 1'-0"

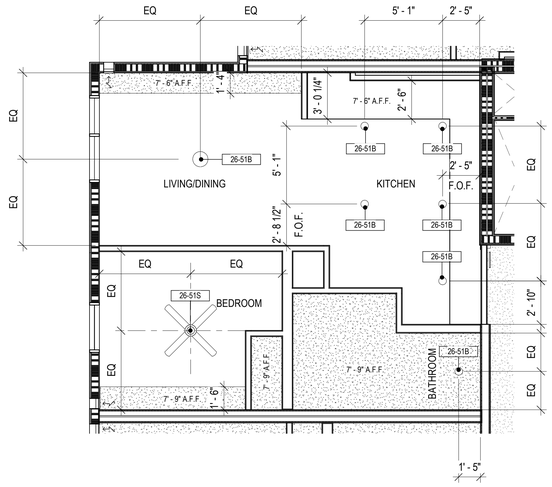

UNIT A1.2 - RCP 2
1/4" = 1'-0"

INTERIOR ELEVATION NOTES

1. PROVIDE BLOCKING FOR ALL WALL-HUNG UNITS, ADJUSTABLE HEIGHT CABINETRY, MILLWORK, GRAB BARS AND ACCESSORIES.
2. SEE UNIT PLANS AND REFLECTED CEILING PLANS FOR EXTENT AND LOCATION OF GYPSUM BOARD SOFFITS.
3. PROVIDE WATERLINE TO REFRIGERATOR LOCATIONS FOR ICE MAKER WHERE SHOWN (SEE PLUMBING DRAWINGS).
4. @ ADAPTABLE UNITS, PROVIDE 30" x 48" CLEAR FLOOR SPACE CONFIGURED FOR FORWARD OR PARALLEL APPROACH CENTERED ON EACH SINK, DISHWASHER, REFRIGERATOR, AND WORKSURFACE. PROVIDE PARALLEL APPROACH AT RANGE.
5. @ ACCESSIBLE UNITS PROVIDE 30" x 48" CLEAR FLOOR SPACE CONFIGURED FOR PARALLEL APPROACH AT REFRIGERATOR, 30" x 48" CLEAR FLOOR SPACE CONFIGURED FOR FORWARD OR PARALLEL APPROACH CENTERED ON EACH SINK, DISHWASHER. WORK SURFACE TO BE PROVIDED ADJACENT TO RANGE. DISHWASHER TO BE ADJACENT TO SINK CABINET
6. PROVIDE ADJUSTABLE SHELVES TO ALL CABINETS, TYP.
7. KITCHEN SOFFITS TO EXTEND TO WITHIN 1" OF UPPER CABINETS.
8. SEE SPECIFICATIONS AND APPLICABLE APPENDICES FOR MORE INFORMATION ON KITCHEN AND BATH FIXTURES, FINISHES AND APPLIANCES.
9. SEE ELECTRICAL DRAWINGS FOR OUTLET TYPES. OUTLETS AND THERMOSTAT LOCATED PER ELEVATIONS ON 6/A4.00 AND G0.35 SHEETS.
10. VERIFY ALL DIMENSIONS IN FIELD PRIOR TO CABINET FABRICATION.
11. EXPOSED SIDES OF CABINETS TO MATCH FINISH AT FACE OF DOOR PANELS. FILLER AND END PANELS TO MATCH FACE OF FINISH AT DOOR PANELS.
12. PROVIDE SCRIBE STRIPS WHERE CABINETS INTERFACE WITH WALLS, CEILINGS OR SOFFITS

FINISH PLAN GENERAL NOTES

1. REFER TO FINISH SCHEDULE ON A10.00 AND FINISH MATERIALS APPENDIX 9 IN SPECIFICATIONS FOR MORE INFORMATION.
2. PROVIDE STRAIGHT, FLUSH BASE AT CARPETED AREAS, MATERIALS AS SCHEDULED, U.O.N.
3. COORDINATE INSTALLATION OF BASE WITH MILLWORK. DO NOT INSTALL BASE WHERE BUILT-IN CABINETS ARE INDICATED.
4. ALL PAINT FINISH OF METAL PARTS SHALL BE SEMI-GLOSS, U.O.N.
5. CARPET CONTRACTOR TO PROVIDE & INSTALL SPECIFIED REDUCTION STRIP AT DOORS WHERE ALL CARPET & RESILIENT FLOORING MEET.
6. FLOAT ALL AREAS WHERE FLOOR IS NOT LEVEL OR TRUE PRIOR TO FLOORING INSTALLATIONS.
7. PROVIDE 1/8" BRUSHED STAINLESS STEEL SCHLUTER STRIP AT CARPET/STONE OR CARPET/CERAMIC TILE THRESHOLD.
8. ALL WALLS TO BE PAINTED PES U.O.N. PROVIDE LEVEL FINISH AT GYPSUM BOARD WALLS AND CEILINGS AREAS, AS IDENTIFIED PER SPECIFICATION SECTION 09 29 00.
9. ALL WALL BASE TO BE WB U.O.N.
10. SEE UNIT PLAN SHEETS FOR UNIT FINISHES AND EXTENT.

UNIT A1.2 ACCESSIBLE KITCHEN STORAGE TABLE						
CAB	ACC. SHELF & DRWR. COUNT	NON-ACC. SHELF & DRWR. CT	WIDTH (in)	DEPTH (in)	ACC. STORAGE (SF)	TOTAL STORAGE (SF)
12-35C	0	0	33	23	0.00	0.00
12-35F	3	0	15	23	7.19	7.19
12-35C	0	0	33	23	0.00	0.00
12-35F	3	0	18	23	8.63	8.63
12-35J	0	1	33	23	0.00	5.27
12-35H	1	0	24	12	2.00	2.00
12-35K	0	1	33	12	0.00	2.75
12-35H	1	0	30	12	2.50	2.50
12-35H	1	0	30	12	2.50	2.50
12-35K	0	1	30	12	0.00	2.50
12-35I	1	0	18	12	1.50	1.50
12-35L	3	1	18	24	9.00	12.00
12-35I	1	0	15	12	1.25	1.25
			TOTAL:		**34.56**	**48.08**
			% ACC.:		**71.9%**	

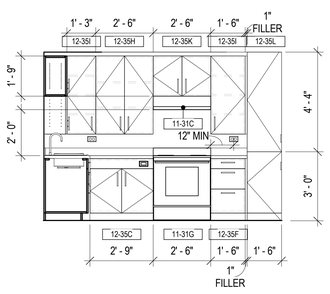

A1.2 - KITCHEN B 4
3/8" = 1'-0"

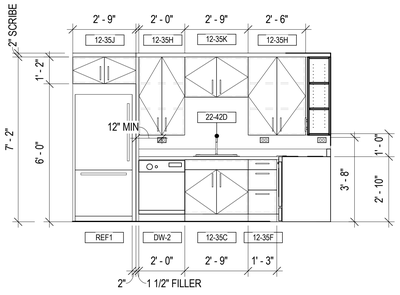

A1.2 - KITCHEN A 3
3/8" = 1'-0"

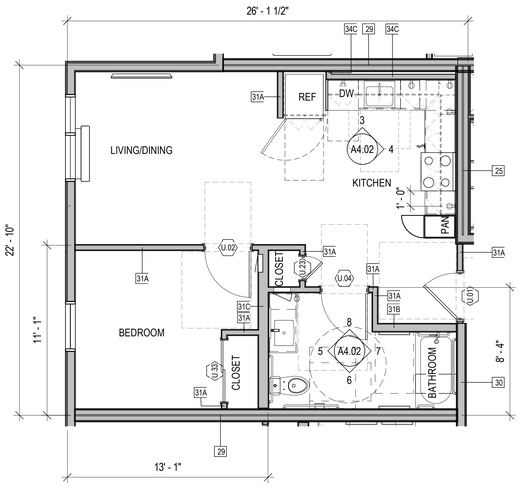

UNIT TYPE A1.2 - MOBILITY ACCESSIBLE (CBC 11B) 1
1/4" = 1'-0"

545 GSF
5 UNITS

UNIT TYPE LEGEND

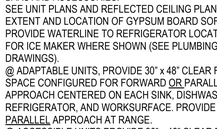

LEVEL 6

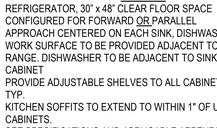

LEVEL 5

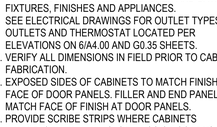

LEVEL 4

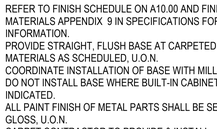

LEVEL 3

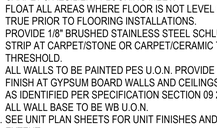

LEVEL 2

SCALE: 1/4" = 1'-0"

PYATOK
1611 TELEGRAPH AVE.
SUITE 200
OAKLAND, CA 94612
T. 510.465.7010 | F. 510.465.8575
www.pyatok.com

THE UNITY COUNCIL
1900 FRUITVALE AVE
#2A
OAKLAND, CA 94601

2700 INTERNATIONAL
OAKLAND, CA 94601

STAMP:

LICENSED ARCHITECT
PETER WALLER
C-33554
4/30/2023
STATE OF CALIFORNIA

ISSUE SCHEDULE

100 SD	5/11/22
50 DD	7/15/22
100 DD	9/16/22
50 CD	11/18/22
PERMIT SET	12/09/22

REVISION SCHEDULE

NO.	ISSUE	DATE

JOB NUMBER:	1937
DRAWN BY:	MA, DV, TN, MO, SP
CHECKED BY:	Checker
ISSUE DATE:	12/09/22
SCALE:	As indicated

TITLE:
UNIT TYPE A1.2 - PLANS, ELEVATIONS, RCPS

SHEET:
A4.02

PRELIMINARY - Not for Construction -

© 2019 PYATOK ARCHITECTURE & URBAN DESIGN

12/8/2022 6:09:18 PM

KEYNOTE LEGEND	
#	KEYNOTE
10-28A	TOILET PAPER HOLDER, LOCATED PER CBC 11B-604.9.6 @ MOBILITY ACCESSIBLE UNITS
10-28B	TOWEL BAR, MOUNT AT 40" MAX. A.F.F. - PROVIDE BLOCKING
10-28C	MIRROR
10-28D	RECESSED MEDICINE CABINET
11-31B	ADAPTABLE ELECTRIC RANGE
11-31C	RANGE HOOD
12-35A	CASEWORK: BATH VANITY SINK CABT., 21" DEEP W/ REMOVABLE FRONT/BASE
12-35B	CASEWORK: BATH VANITY CABT., 21" DEEP W/ 4 DRAWERS
12-35C	CASEWORK: KIT. SINK BASE CABT., 23" DEEP W/ REMOVABLE FRONT/BASE
12-35F	CASEWORK: KIT. DRAWER BASE CABT., 23" DEEP
12-35H	CASEWORK: KIT. UPPER CABT., 12" DEEP, DOUBLE DOOR, ADJUSTABLE SHELVES (DASHED)
12-35I	CASEWORK: KIT. UPPER CABT., 12" DEEP, SINGLE DOOR, ADJUSTABLE SHELVES (DASHED)
12-35J	CASEWORK: KIT. UPPER CABT., 24" DEEP, ABV. REF., ADJUSTABLE SHELVES (DASHED)
12-35K	CASEWORK: KIT. UPPER CABT., 12" DEEP, ABV. RANGE HOOD OR SINK OR WATERCLOSET
12-36A	COUNTERTOP WITH 4" BACKSPLASH, SEE FINISH SCHEDULE
22-42A	TOILET, 17" MIN. 19" MAX. SEAT HEIGHT, S.P.D.
22-42B	LAVATORY SINK, S.P.D.
22-42D	KITCHEN SINK, S.P.D.
22-48A	BATHTUB, 32" X 60", WITH SHOWER/TUB CONTROLS - PROVIDE BLOCKING FOR GRAB BARS
26-51A	INTERIOR LIGHTING, WALL-MOUNTED LINEAR VANITY LIGHT FIXTURE, S.E.D.
26-51B	INTERIOR LIGHTING, CEILING-MOUNTED LIGHT FIXTURE, S.E.D.
26-51S	INTERIOR LIGHTING, CEILING FAN WITH LIGHT, S.E.D.
DW-1	DISHWASHER
RBH	ROBE HOOK
REF1	REFRIGERATOR

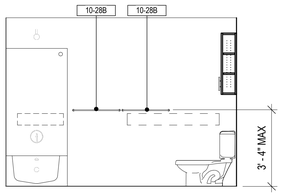

A2 - BATHROOM D (8)
3/8" = 1'-0"

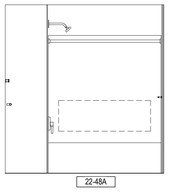

A2 - BATHROOM C (7)
3/8" = 1'-0"

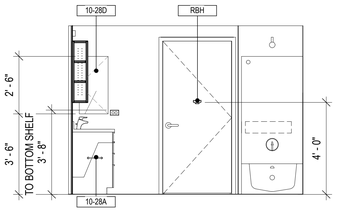

A2 - BATHROOM B (6)
3/8" = 1'-0"

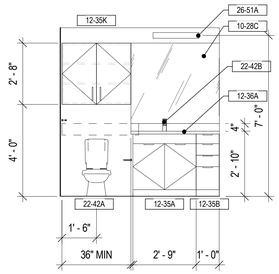

A2 - BATHROOM A (5)
3/8" = 1'-0"

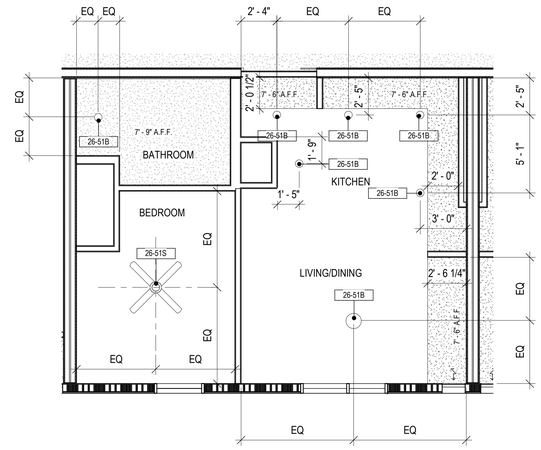

UNIT A2 - RCP (2)
1/4" = 1'-0"

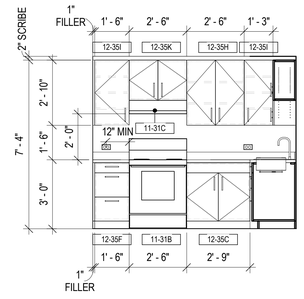

A2 - KITCHEN B (4)
3/8" = 1'-0"

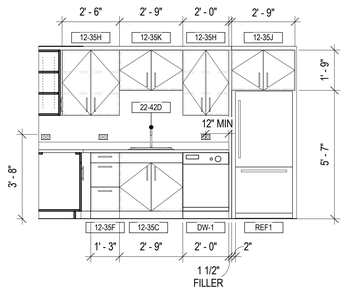

A2 - KITCHEN A (3)
3/8" = 1'-0"

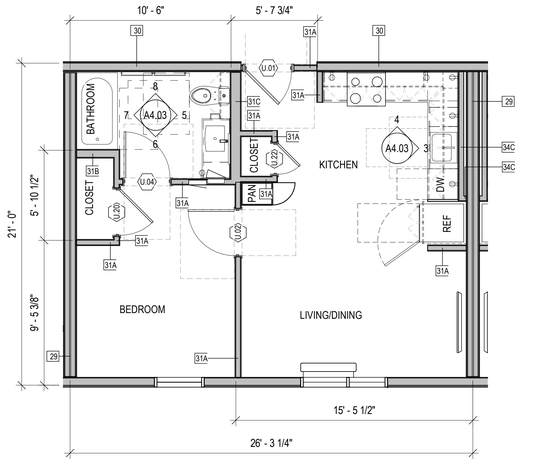

UNIT TYPE A2 - ADAPTABLE (CBC 11B) (1)
1/4" = 1'-0"

508 GSF
8 UNITS

UNIT TYPE LEGEND

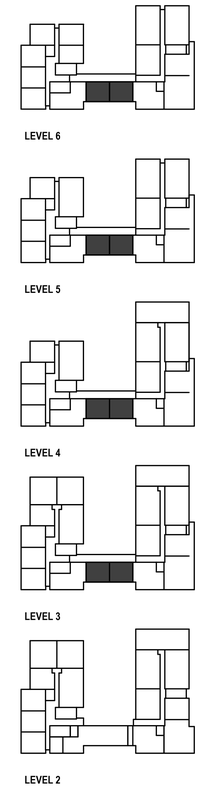

INTERIOR ELEVATION NOTES

1. PROVIDE BLOCKING FOR ALL WALL-HUNG UNITS, ADJUSTABLE HEIGHT CABINETRY, MILLWORK, GRAB BARS AND ACCESSORIES.
2. SEE UNIT PLANS AND REFLECTED CEILING PLANS FOR EXTENT AND LOCATION OF GYPSUM BOARD SOFFITS.
3. PROVIDE WATERLINE TO REFRIGERATOR LOCATIONS FOR ICE MAKER WHERE SHOWN (SEE PLUMBING DRAWINGS).
4. @ ADAPTABLE UNITS, PROVIDE 30" x 48" CLEAR FLOOR SPACE CONFIGURED FOR FORWARD OR PARALLEL APPROACH CENTERED ON EACH SINK, DISHWASHER, REFRIGERATOR, AND WORKSURFACE. PROVIDE PARALLEL APPROACH AT RANGE.
5. @ ACCESSIBLE UNITS PROVIDE 30" x 48" CLEAR FLOOR SPACE CONFIGURED FOR PARALLEL APPROACH AT REFRIGERATOR, 30" x 48" CLEAR FLOOR SPACE CONFIGURED FOR FORWARD OR PARALLEL APPROACH CENTERED ON EACH SINK, DISHWASHER. WORK SURFACE TO BE PROVIDED ADJACENT TO RANGE. DISHWASHER TO BE ADJACENT TO SINK CABINET
6. PROVIDE ADJUSTABLE SHELVES TO ALL CABINETS, TYP.
7. KITCHEN SOFFITS TO EXTEND TO WITHIN 1" OF UPPER CABINETS.
8. SEE SPECIFICATIONS AND APPLICABLE APPENDICES FOR MORE INFORMATION ON KITCHEN AND BATH FIXTURES, FINISHES AND APPLIANCES.
9. SEE ELECTRICAL DRAWINGS FOR OUTLET TYPES. OUTLETS AND THERMOSTAT LOCATED PER ELEVATIONS ON 6/A4.00 AND G0.35 SHEETS.
10. VERIFY ALL DIMENSIONS IN FIELD PRIOR TO CABINET FABRICATION.
11. EXPOSED SIDES OF CABINETS TO MATCH FINISH AT FACE OF DOOR PANELS. FILLER AND END PANELS TO MATCH FACE OF FINISH AT DOOR PANELS.
12. PROVIDE SCRIBE STRIPS WHERE CABINETS INTERFACE WITH WALLS, CEILINGS OR SOFFITS

FINISH PLAN GENERAL NOTES

1. REFER TO FINISH SCHEDULE ON A10.00 AND FINISH MATERIALS APPENDIX 9 IN SPECIFICATIONS FOR MORE INFORMATION.
2. PROVIDE STRAIGHT, FLUSH BASE AT CARPETED AREAS, MATERIALS AS SCHEDULED, U.O.N.
3. COORDINATE INSTALLATION OF BASE WITH MILLWORK. DO NOT INSTALL BASE WHERE BUILT-IN CABINETS ARE INDICATED.
4. ALL PAINT FINISH OF METAL PARTS SHALL BE SEMI-GLOSS, U.O.N.
5. CARPET CONTRACTOR TO PROVIDE & INSTALL SPECIFIED REDUCTION STRIP AT DOORS WHERE ALL CARPET & RESILIENT FLOORING MEET.
6. FLOAT ALL AREAS WHERE FLOOR IS NOT LEVEL OR TRUE PRIOR TO FLOORING INSTALLATIONS.
7. PROVIDE 1/8" BRUSHED STAINLESS STEEL SCHLUTER STRIP AT CARPET/STONE OR CARPET/CERAMIC TILE THRESHOLD.
8. ALL WALLS TO BE PAINTED PES U.O.N. PROVIDE LEVEL FINISH AT GYPSUM BOARD WALLS AND CEILINGS AREAS, AS IDENTIFIED PER SPECIFICATION SECTION 09 29 00.
9. ALL WALL BASE TO BE WB U.O.N.
10. SEE UNIT PLAN SHEETS FOR UNIT FINISHES AND EXTENT.

PYATOK
1611 TELEGRAPH AVE.
SUITE 200
OAKLAND, CA 94612
T. 510.465.7010 | F. 510.465.8575
www.pyatok.com

THE UNITY COUNCIL
1900 FRUITVALE AVE
#2A
OAKLAND, CA 94601

2700 INTERNATIONAL
OAKLAND, CA 94601

STAMP:
LICENSED ARCHITECT
PETER WALLER
C-23554
4/30/2023
STATE OF CALIFORNIA

ISSUE SCHEDULE

100 SD	5/11/22
50 DD	7/15/22
100 DD	9/16/22
50 CD	11/18/22
PERMIT SET	12/09/22

REVISION SCHEDULE

NO.	ISSUE	DATE

JOB NUMBER:	1937
DRAWN BY:	MA, DV, TN, MO, SP
CHECKED BY:	Checker
ISSUE DATE:	12/09/22
SCALE:	As indicated

TITLE:
UNIT TYPE A2 - PLANS, ELEVATIONS, RCPS

SHEET:
A4.03

PRELIMINARY - Not for Construction -

© 2019 PYATOK ARCHITECTURE & URBAN DESIGN

12/8/2022 6:09:22 PM

KEYNOTE LEGEND	
#	KEYNOTE
10-28A	TOILET PAPER HOLDER, LOCATED PER CBC 11B-604.9.6 @ MOBILITY ACCESSIBLE UNITS
10-28B	TOWEL BAR, MOUNT AT 40" MAX. A.F.F. - PROVIDE BLOCKING
10-28C	MIRROR
11-31A	REFRIGERATOR/FREEZER - 19 CU.FT.
11-31B	ADAPTABLE ELECTRIC RANGE
11-31C	RANGE HOOD
12-35A	CASEWORK: BATH VANITY SINK CABT., 21" DEEP W/ REMOVABLE FRONT/BASE
12-35C	CASEWORK: KIT. SINK BASE CABT., 23" DEEP W/ REMOVABLE FRONT/BASE
12-35F	CASEWORK: KIT. DRAWER BASE CABT., 23" DEEP
12-35H	CASEWORK: KIT. UPPER CABT., 12" DEEP, DOUBLE DOOR, ADJUSTABLE SHELVES (DASHED)
12-35I	CASEWORK: KIT. UPPER CABT., 12" DEEP, SINGLE DOOR, ADJUSTABLE SHELVES (DASHED)
12-35J	CASEWORK: KIT. UPPER CABT., 24" DEEP, ABV. REF., ADJUSTABLE SHELVES (DASHED)
12-35K	CASEWORK: KIT. UPPER CABT., 12" DEEP, ABV. RANGE HOOD OR SINK OR WATERCLOSET
12-36A	COUNTERTOP WITH 4" BACKSPLASH, SEE FINISH SCHEDULE
22-42A	TOILET, 17" MIN. 19" MAX. SEAT HEIGHT, S.P.D.
22-42B	LAVATORY SINK, S.P.D.
22-42D	KITCHEN SINK, S.P.D.
22-48A	BATHTUB, 32" X 60", WITH SHOWER/TUB CONTROLS - PROVIDE BLOCKING FOR GRAB BARS
26-51A	INTERIOR LIGHTING, WALL-MOUNTED LINEAR VANITY LIGHT FIXTURE, S.E.D.
26-51B	INTERIOR LIGHTING, CEILING-MOUNTED LIGHT FIXTURE, S.E.D.
26-51S	INTERIOR LIGHTING, CEILING FAN WITH LIGHT, S.E.D.
DW-1	DISHWASHER
RBH	ROBE HOOK
SL-1	SHELVING

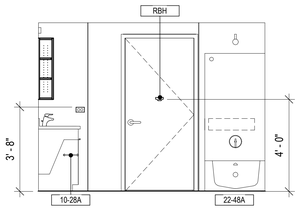

A3 - BATHROOM D 8
3/8" = 1'-0"

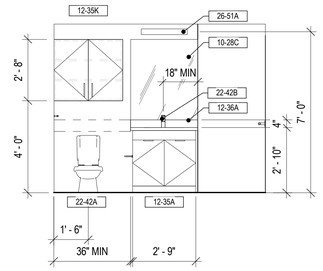

A3 - BATHROOM C 7
3/8" = 1'-0"

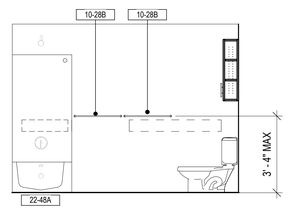

A3 - BATHROOM B 6
3/8" = 1'-0"

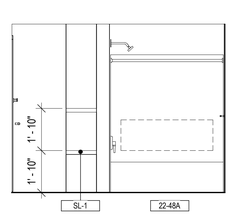

A3 - BATHROOM A 5
3/8" = 1'-0"

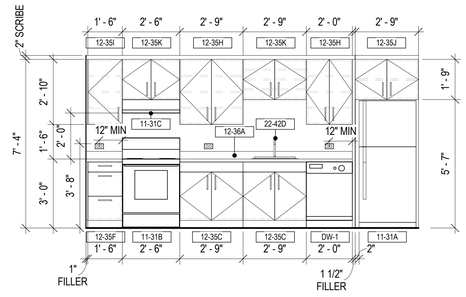

A3 - KITCHEN A 3
3/8" = 1'-0"

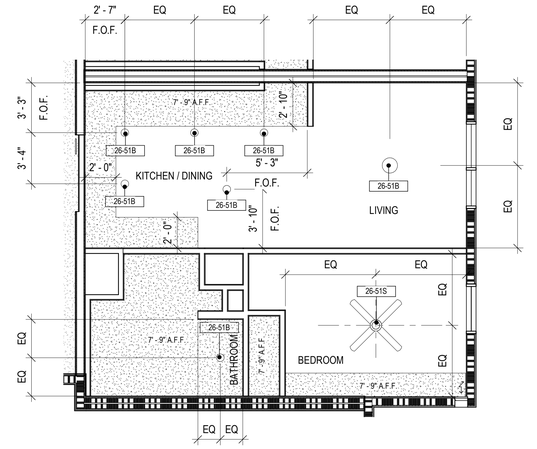

LEVEL 6 - RCP 2
1/4" = 1'-0"

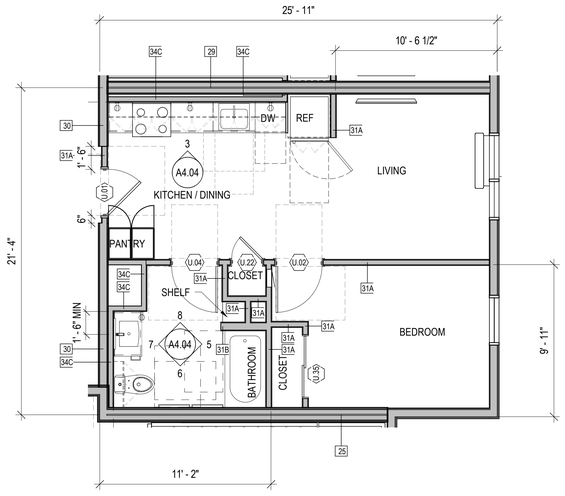

507 GSF
2 UNITS

UNIT TYPE A3 - ADAPTABLE (CBC 11B) 1
1/4" = 1'-0"

INTERIOR ELEVATION NOTES

1. PROVIDE BLOCKING FOR ALL WALL-HUNG UNITS, ADJUSTABLE HEIGHT CABINETRY, MILLWORK, GRAB BARS AND ACCESSORIES.
2. SEE UNIT PLANS AND REFLECTED CEILING PLANS FOR EXTENT AND LOCATION OF GYPSUM BOARD SOFFITS.
3. PROVIDE WATERLINE TO REFRIGERATOR LOCATIONS FOR ICE MAKER WHERE SHOWN (SEE PLUMBING DRAWINGS).
4. @ ADAPTABLE UNITS, PROVIDE 30" x 48" CLEAR FLOOR SPACE CONFIGURED FOR FORWARD OR PARALLEL APPROACH CENTERED ON EACH SINK, DISHWASHER, REFRIGERATOR, AND WORKSURFACE. PROVIDE PARALLEL APPROACH AT RANGE.
5. @ ACCESSIBLE UNITS PROVIDE 30" x 48" CLEAR FLOOR SPACE CONFIGURED FOR PARALLEL APPROACH AT REFRIGERATOR, 30" x 48" CLEAR FLOOR SPACE CONFIGURED FOR FORWARD OR PARALLEL APPROACH CENTERED ON EACH SINK, DISHWASHER. WORK SURFACE TO BE PROVIDED ADJACENT TO RANGE. DISHWASHER TO BE ADJACENT TO SINK CABINET
6. PROVIDE ADJUSTABLE SHELVES TO ALL CABINETS, TYP.
7. KITCHEN SOFFITS TO EXTEND TO WITHIN 1" OF UPPER CABINETS.
8. SEE SPECIFICATIONS AND APPLICABLE APPENDICES FOR MORE INFORMATION ON KITCHEN AND BATH FIXTURES, FINISHES AND APPLIANCES.
9. SEE ELECTRICAL DRAWINGS FOR OUTLET TYPES. OUTLETS AND THERMOSTAT LOCATED PER ELEVATIONS ON 6/A4.00 AND G0.35 SHEETS.
10. VERIFY ALL DIMENSIONS IN FIELD PRIOR TO CABINET FABRICATION.
11. EXPOSED SIDES OF CABINETS TO MATCH FINISH AT FACE OF DOOR PANELS. FILLER AND END PANELS TO MATCH FACE OF FINISH AT DOOR PANELS.
12. PROVIDE SCRIBE STRIPS WHERE CABINETS INTERFACE WITH WALLS, CEILINGS OR SOFFITS

FINISH PLAN GENERAL NOTES

1. REFER TO FINISH SCHEDULE ON A10.00 AND FINISH MATERIALS APPENDIX 9 IN SPECIFICATIONS FOR MORE INFORMATION.
2. PROVIDE STRAIGHT, FLUSH BASE AT CARPETED AREAS, MATERIALS AS SCHEDULED, U.O.N.
3. COORDINATE INSTALLATION OF BASE WITH MILLWORK. DO NOT INSTALL BASE WHERE BUILT-IN CABINETS ARE INDICATED.
4. ALL PAINT FINISH OF METAL PARTS SHALL BE SEMI-GLOSS, U.O.N.
5. CARPET CONTRACTOR TO PROVIDE & INSTALL SPECIFIED REDUCTION STRIP AT DOORS WHERE ALL CARPET & RESILIENT FLOORING MEET.
6. FLOAT ALL AREAS WHERE FLOOR IS NOT LEVEL OR TRUE PRIOR TO FLOORING INSTALLATIONS.
7. PROVIDE 1/8" BRUSHED STAINLESS STEEL SCHLUTER STRIP AT CARPET/STONE OR CARPET/CERAMIC TILE THRESHOLD.
8. ALL WALLS TO BE PAINTED PES U.O.N. PROVIDE LEVEL FINISH AT GYPSUM BOARD WALLS AND CEILINGS AREAS, AS IDENTIFIED PER SPECIFICATION SECTION 09 29 00.
9. ALL WALL BASE TO BE WB U.O.N.
10. SEE UNIT PLAN SHEETS FOR UNIT FINISHES AND EXTENT.

UNIT TYPE LEGEND

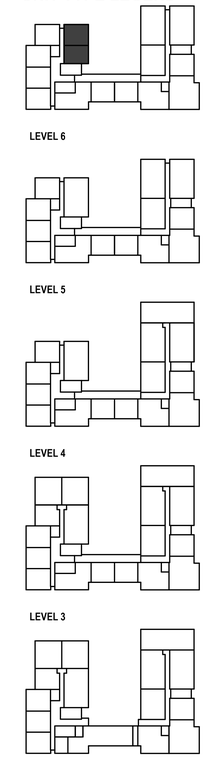

0' 2' 4' 8' 16'

SCALE: 1/4" = 1'-0"

PYATOK
1611 TELEGRAPH AVE.
SUITE 200
OAKLAND, CA 94612
T. 510.465.7010 | F. 510.465.8575
www.pyatok.com

THE UNITY COUNCIL
1900 FRUITVALE AVE
#2A
OAKLAND, CA 94601

2700 INTERNATIONAL

OAKLAND, CA 94601

STAMP:

LICENSED ARCHITECT
PETER WALLER
C-23554
4/30/2023
STATE OF CALIFORNIA

ISSUE SCHEDULE

100 SD	5/11/22
50 DD	7/15/22
100 DD	9/16/22
50 CD	11/18/22
PERMIT SET	12/09/22

REVISION SCHEDULE

NO.	ISSUE	DATE

JOB NUMBER:	1937
DRAWN BY:	MA, DV, TN, MO, SP
CHECKED BY:	Checker
ISSUE DATE:	12/09/22
SCALE:	As indicated

TITLE:
UNIT TYPE A3 - PLANS, ELEVATIONS, RCPS

SHEET:
A4.04

PRELIMINARY - Not for Construction -

© 2019 PYATOK ARCHITECTURE & URBAN DESIGN

12/8/2022 6:09:26 PM

KEYNOTE LEGEND	
#	KEYNOTE
10-28A	TOILET PAPER HOLDER, LOCATED PER CBC 11B-604.9.6 @ MOBILITY ACCESSIBLE UNITS
10-28B	TOWEL BAR, MOUNT AT 40" MAX. A.F.F. - PROVIDE BLOCKING
10-28C	MIRROR
10-28D	RECESSED MEDICINE CABINET
11-31B	ADAPTABLE ELECTRIC RANGE
11-31C	RANGE HOOD
12-35A	CASEWORK: BATH VANITY SINK CABT., 21" DEEP W/ REMOVABLE FRONT/BASE
12-35B	CASEWORK: BATH VANITY CABT., 21" DEEP W/ 4 DRAWERS
12-35C	CASEWORK: KIT. SINK BASE CABT., 23" DEEP W/ REMOVABLE FRONT/BASE
12-35F	CASEWORK: KIT. DRAWER BASE CABT., 23" DEEP
12-35H	CASEWORK: KIT. UPPER CABT., 12" DEEP, DOUBLE DOOR, ADJUSTABLE SHELVES (DASHED)
12-35I	CASEWORK: KIT. UPPER CABT., 12" DEEP, SINGLE DOOR, ADJUSTABLE SHELVES (DASHED)
12-35J	CASEWORK: KIT. UPPER CABT., 24" DEEP, ABV. REF., ADJUSTABLE SHELVES (DASHED)
12-35K	CASEWORK: KIT. UPPER CABT., 12" DEEP, ABV. RANGE HOOD OR SINK OR WATERCLOSET
12-36A	COUNTERTOP WITH 4" BACKSPLASH, SEE FINISH SCHEDULE
22-42A	TOILET, 17" MIN. 19" MAX. SEAT HEIGHT, S.P.D.
22-42D	KITCHEN SINK, S.P.D.
22-48A	BATHTUB, 32" X 60", WITH SHOWER/TUB CONTROLS - PROVIDE BLOCKING FOR GRAB BARS
26-51A	INTERIOR LIGHTING, WALL-MOUNTED LINEAR VANITY LIGHT FIXTURE, S.E.D.
26-51B	INTERIOR LIGHTING, CEILING-MOUNTED LIGHT FIXTURE, S.E.D.
26-51S	INTERIOR LIGHTING, CEILING FAN WITH LIGHT, S.E.D.
DW-1	DISHWASHER
RBH	ROBE HOOK
REF1	REFRIGERATOR

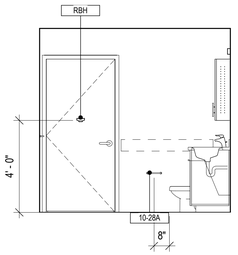

B1 - BATHROOM D (9)
3/8" = 1'-0"

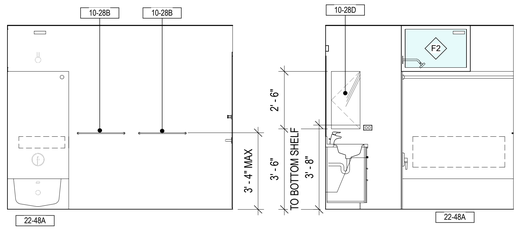

B1 - BATHROOM C (8)
3/8" = 1'-0"

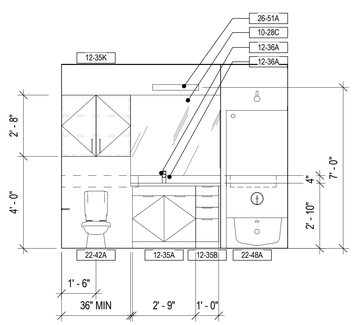

B1 - BATHROOM B (7)
3/8" = 1'-0"

B1 - BATHROOM A (6)
3/8" = 1'-0"

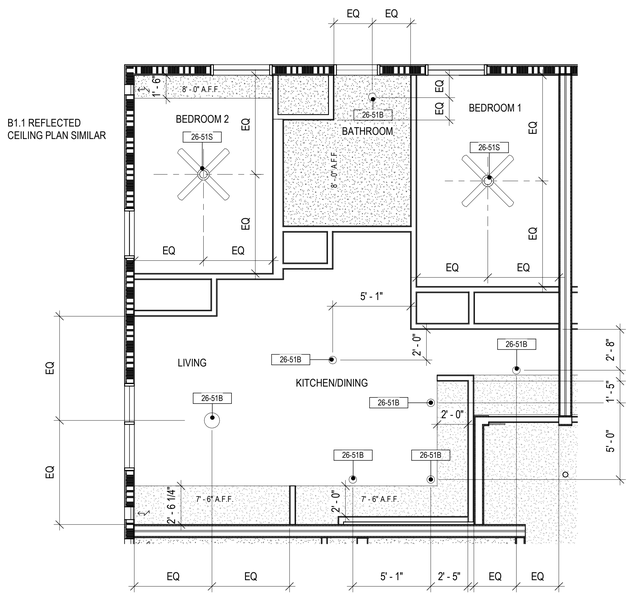

UNIT B1 - RCP (3)
1/4" = 1'-0"

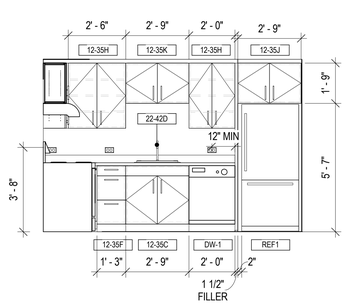

B1 - KITCHEN B (5)
B1.1 SIMILAR
3/8" = 1'-0"

B1 - KITCHEN A (4)
B1.1 SIMILAR
3/8" = 1'-0"

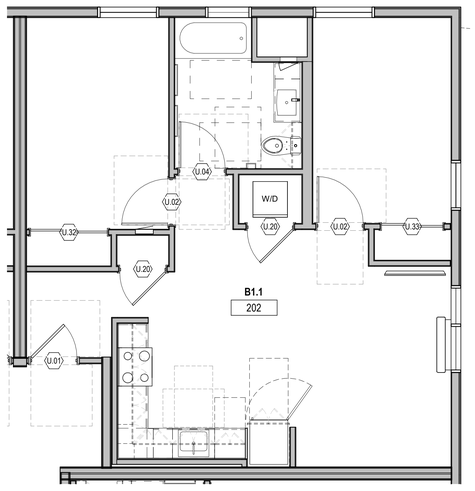

770 GSF
1 UNIT - MANAGER'S UNIT ONLY AT UNIT 202
UNIT TYPE B1.1 - ADAPTABLE (CBC 11B) (2)
1/4" = 1'-0"

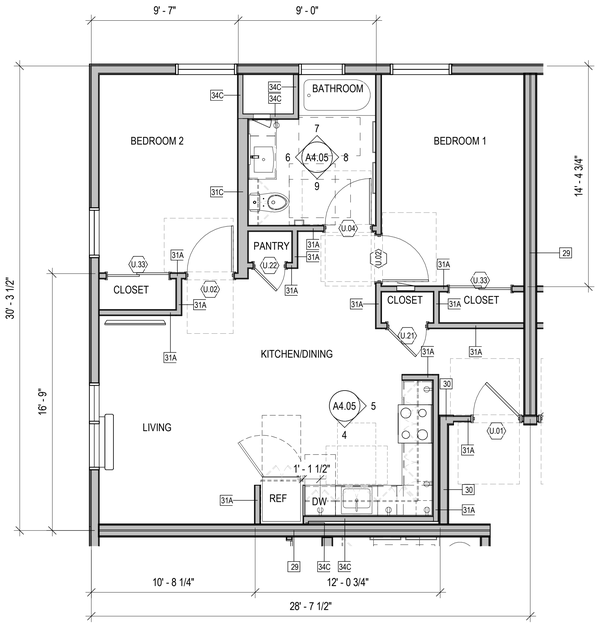

770 GSF
3 UNITS
UNIT TYPE B1 - ADAPTABLE (CBC 11B) (1)
1/4" = 1'-0"

INTERIOR ELEVATION NOTES

1. PROVIDE BLOCKING FOR ALL WALL-HUNG UNITS, ADJUSTABLE HEIGHT CABINETRY, MILLWORK, GRAB BARS AND ACCESSORIES.
2. SEE UNIT PLANS AND REFLECTED CEILING PLANS FOR EXTENT AND LOCATION OF GYPSUM BOARD SOFFITS.
3. PROVIDE WATERLINE TO REFRIGERATOR LOCATIONS FOR ICE MAKER WHERE SHOWN (SEE PLUMBING DRAWINGS).
4. @ ADAPTABLE UNITS, PROVIDE 30" x 48" CLEAR FLOOR SPACE CONFIGURED FOR FORWARD OR PARALLEL APPROACH CENTERED ON EACH SINK, DISHWASHER, REFRIGERATOR, AND WORKSURFACE. PROVIDE PARALLEL APPROACH AT RANGE.
5. @ ACCESSIBLE UNITS PROVIDE 30" x 48" CLEAR FLOOR SPACE CONFIGURED FOR PARALLEL APPROACH AT REFRIGERATOR, 30" x 48" CLEAR FLOOR SPACE CONFIGURED FOR FORWARD OR PARALLEL APPROACH CENTERED ON EACH SINK, DISHWASHER. WORK SURFACE TO BE PROVIDED ADJACENT TO RANGE. DISHWASHER TO BE ADJACENT TO SINK CABINET
6. PROVIDE ADJUSTABLE SHELVES TO ALL CABINETS, TYP.
7. KITCHEN SOFFITS TO EXTEND TO WITHIN 1" OF UPPER CABINETS.
8. SEE SPECIFICATIONS AND APPLICABLE APPENDICES FOR MORE INFORMATION ON KITCHEN AND BATH FIXTURES, FINISHES AND APPLIANCES.
9. SEE ELECTRICAL DRAWINGS FOR OUTLET TYPES. OUTLETS AND THERMOSTAT LOCATED PER ELEVATIONS ON 6/A4.00 AND G0.35 SHEETS.
10. VERIFY ALL DIMENSIONS IN FIELD PRIOR TO CABINET FABRICATION.
11. EXPOSED SIDES OF CABINETS TO MATCH FINISH AT FACE OF DOOR PANELS. FILLER AND END PANELS TO MATCH FACE OF FINISH AT DOOR PANELS.
12. PROVIDE SCRIBE STRIPS WHERE CABINETS INTERFACE WITH WALLS, CEILINGS OR SOFFITS

FINISH PLAN GENERAL NOTES

1. REFER TO FINISH SCHEDULE ON A10.00 AND FINISH MATERIALS APPENDIX 9 IN SPECIFICATIONS FOR MORE INFORMATION.
2. PROVIDE STRAIGHT, FLUSH BASE AT CARPETED AREAS, MATERIALS AS SCHEDULED, U.O.N.
3. COORDINATE INSTALLATION OF BASE WITH MILLWORK. DO NOT INSTALL BASE WHERE BUILT-IN CABINETS ARE INDICATED.
4. ALL PAINT FINISH OF METAL PARTS SHALL BE SEMI-GLOSS, U.O.N.
5. CARPET CONTRACTOR TO PROVIDE & INSTALL SPECIFIED REDUCTION STRIP AT DOORS WHERE ALL CARPET & RESILIENT FLOORING MEET.
6. FLOAT ALL AREAS WHERE FLOOR IS NOT LEVEL OR TRUE PRIOR TO FLOORING INSTALLATIONS.
7. PROVIDE 1/8" BRUSHED STAINLESS STEEL SCHLUTER STRIP AT CARPET/STONE OR CARPET/CERAMIC TILE THRESHOLD.
8. ALL WALLS TO BE PAINTED PES U.O.N. PROVIDE LEVEL FINISH AT GYPSUM BOARD WALLS AND CEILINGS AREAS, AS IDENTIFIED PER SPECIFICATION SECTION 09 29 00.
9. ALL WALL BASE TO BE WB U.O.N.
10. SEE UNIT PLAN SHEETS FOR UNIT FINISHES AND EXTENT.

UNIT TYPE LEGEND

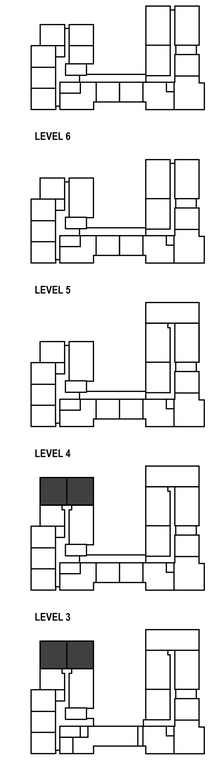

0' 2' 4' 8' 16'
SCALE: 1/4" = 1'-0"

PYATOK
1611 TELEGRAPH AVE.
SUITE 200
OAKLAND, CA 94612
T. 510.465.7010 | F. 510.465.8575
www.pyatok.com

THE UNITY COUNCIL
1900 FRUITVALE AVE
#2A
OAKLAND, CA 94601

2700 INTERNATIONAL
OAKLAND, CA 94601

STAMP:
LICENSED ARCHITECT
PETER WALLER
C-23554
4/30/2023
STATE OF CALIFORNIA

ISSUE SCHEDULE

100 SD	5/11/22
50 DD	7/15/22
100 DD	9/16/22
50 CD	11/18/22
PERMIT SET	12/09/22

REVISION SCHEDULE

NO.	ISSUE	DATE

JOB NUMBER:	1937
DRAWN BY:	MA, DV, TN, MO, SP
CHECKED BY:	Checker
ISSUE DATE:	12/09/22
SCALE:	As indicated

TITLE:
UNIT TYPE B1 - PLANS, ELEVATIONS, RCPS

SHEET:
A4.05

PRELIMINARY - Not for Construction -

© 2019 PYATOK ARCHITECTURE & URBAN DESIGN

12/8/2022 6:09:31 PM

KEYNOTE LEGEND	
#	KEYNOTE
10-28A	TOILET PAPER HOLDER, LOCATED PER CBC 11B-604.9.6 @ MOBILITY ACCESSIBLE UNITS
10-28B	TOWEL BAR, MOUNT AT 40" MAX. A.F.F. - PROVIDE BLOCKING
10-28C	MIRROR
10-28D	RECESSED MEDICINE CABINET
10-28E	TOILET GRAB BAR
10-28G	GRAB BARS - PROVIDE BLOCKING. SEE TS0.31 FOR MORE INFORMATION
11-31C	RANGE HOOD
11-31G	ACCESSIBLE ELECTRIC RANGE
12-35A	CASEWORK: BATH VANITY SINK CABT., 21" DEEP W/ REMOVABLE FRONT/BASE
12-35B	CASEWORK: BATH VANITY CABT., 21" DEEP W/ 4 DRAWERS
12-35C	CASEWORK: KIT. SINK BASE CABT., 23" DEEP W/ REMOVABLE FRONT/BASE
12-35F	CASEWORK: KIT. DRAWER BASE CABT., 23" DEEP
12-35H	CASEWORK: KIT. UPPER CABT., 12" DEEP, DOUBLE DOOR, ADJUSTABLE SHELVES (DASHED)
12-35I	CASEWORK: KIT. UPPER CABT., 12" DEEP, SINGLE DOOR, ADJUSTABLE SHELVES (DASHED)
12-35J	CASEWORK: KIT. UPPER CABT., 24" DEEP, ABV. REF., ADJUSTABLE SHELVES (DASHED)
12-35K	CASEWORK: KIT. UPPER CABT., 12" DEEP, ABV. RANGE HOOD OR SINK OR WATERCLOSET
12-36A	COUNTERTOP WITH 4" BACKSPLASH, SEE FINISH SCHEDULE
22-42A	TOILET, 17" MIN. 19" MAX. SEAT HEIGHT, S.P.D.
22-42B	LAVATORY SINK, S.P.D.
22-42D	KITCHEN SINK, S.P.D.
22-48B	BATHTUB, 32" X 60", WITH SHOWER/TUB CONTROLS - ACCESSIBLE ATTACHED ENCLOSURE WITH GRAB BARS AND SEAT, WITH REMOVABLE SPRAY NOZZLE
26-51A	INTERIOR LIGHTING, WALL-MOUNTED LINEAR VANITY LIGHT FIXTURE, S.E.D.
26-51B	INTERIOR LIGHTING, CEILING-MOUNTED LIGHT FIXTURE, S.E.D.
26-51S	INTERIOR LIGHTING, CEILING FAN WITH LIGHT, S.E.D.
DW-2	ACCESSIBLE DISHWASHER
RBH	ROBE HOOK
REF1	REFRIGERATOR

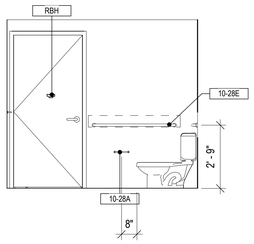

B2 - BATHROOM D (8)
3/8" = 1'-0"

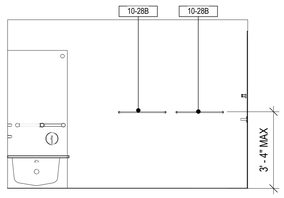

B2 - BATHROOM C (7)
3/8" = 1'-0"

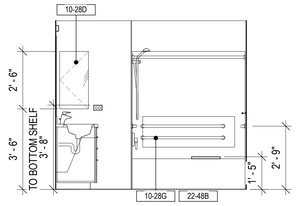

B2 - BATHROOM B (6)
3/8" = 1'-0"

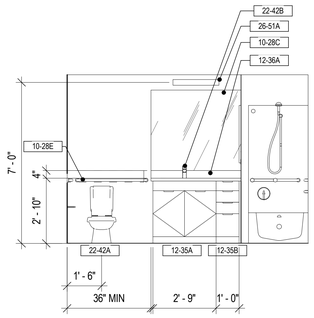

B2 - BATHROOM A (5)
3/8" = 1'-0"

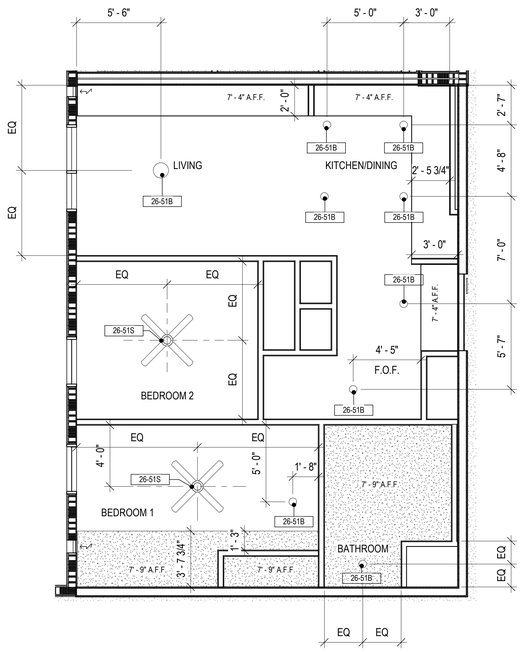

UNIT B2 - RCP (2)
1/4" = 1'-0"

INTERIOR ELEVATION NOTES

1. PROVIDE BLOCKING FOR ALL WALL-HUNG UNITS, ADJUSTABLE HEIGHT CABINETRY, MILLWORK, GRAB BARS AND ACCESSORIES.
2. SEE UNIT PLANS AND REFLECTED CEILING PLANS FOR EXTENT AND LOCATION OF GYPSUM BOARD SOFFITS.
3. PROVIDE WATERLINE TO REFRIGERATOR LOCATIONS FOR ICE MAKER WHERE SHOWN (SEE PLUMBING DRAWINGS).
4. @ ADAPTABLE UNITS, PROVIDE 30" x 48" CLEAR FLOOR SPACE CONFIGURED FOR FORWARD OR PARALLEL APPROACH CENTERED ON EACH SINK, DISHWASHER, REFRIGERATOR, AND WORKSURFACE. PROVIDE PARALLEL APPROACH AT RANGE.
5. @ ACCESSIBLE UNITS PROVIDE 30" x 48" CLEAR FLOOR SPACE CONFIGURED FOR PARALLEL APPROACH AT REFRIGERATOR, 30" x 48" CLEAR FLOOR SPACE CONFIGURED FOR FORWARD OR PARALLEL APPROACH CENTERED ON EACH SINK, DISHWASHER. WORK SURFACE TO BE PROVIDED ADJACENT TO RANGE. DISHWASHER TO BE ADJACENT TO SINK CABINET
6. PROVIDE ADJUSTABLE SHELVES TO ALL CABINETS, TYP.
7. KITCHEN SOFFITS TO EXTEND TO WITHIN 1" OF UPPER CABINETS.
8. SEE SPECIFICATIONS AND APPLICABLE APPENDICES FOR MORE INFORMATION ON KITCHEN AND BATH FIXTURES, FINISHES AND APPLIANCES.
9. SEE ELECTRICAL DRAWINGS FOR OUTLET TYPES. OUTLETS AND THERMOSTAT LOCATED PER ELEVATIONS ON 6/A4.00 AND G0.35 SHEETS.
10. VERIFY ALL DIMENSIONS IN FIELD PRIOR TO CABINET FABRICATION.
11. EXPOSED SIDES OF CABINETS TO MATCH FINISH AT FACE OF DOOR PANELS. FILLER AND END PANELS TO MATCH FACE OF FINISH AT DOOR PANELS.
12. PROVIDE SCRIBE STRIPS WHERE CABINETS INTERFACE WITH WALLS, CEILINGS OR SOFFITS

FINISH PLAN GENERAL NOTES

1. REFER TO FINISH SCHEDULE ON A10.00 AND FINISH MATERIALS APPENDIX 9 IN SPECIFICATIONS FOR MORE INFORMATION.
2. PROVIDE STRAIGHT, FLUSH BASE AT CARPETED AREAS, MATERIALS AS SCHEDULED, U.O.N.
3. COORDINATE INSTALLATION OF BASE WITH MILLWORK. DO NOT INSTALL BASE WHERE BUILT-IN CABINETS ARE INDICATED.
4. ALL PAINT FINISH OF METAL PARTS SHALL BE SEMI-GLOSS, U.O.N.
5. CARPET CONTRACTOR TO PROVIDE & INSTALL SPECIFIED REDUCTION STRIP AT DOORS WHERE ALL CARPET & RESILIENT FLOORING MEET.
6. FLOAT ALL AREAS WHERE FLOOR IS NOT LEVEL OR TRUE PRIOR TO FLOORING INSTALLATIONS.
7. PROVIDE 1/8" BRUSHED STAINLESS STEEL SCHLUTER STRIP AT CARPET/STONE OR CARPET/CERAMIC TILE THRESHOLD.
8. ALL WALLS TO BE PAINTED PES U.O.N. PROVIDE LEVEL FINISH AT GYPSUM BOARD WALLS AND CEILINGS AREAS, AS IDENTIFIED PER SPECIFICATION SECTION 09 29 00.
9. ALL WALL BASE TO BE WB U.O.N.
10. SEE UNIT PLAN SHEETS FOR UNIT FINISHES AND EXTENT.

UNIT B2- ACCESSIBLE KITCHEN STORAGE TABLE						
CAB	ACC. SHELF & DRWR....	NON-ACC. SHELF & DRWR. CT	WIDTH (in)	DEPTH (in)	ACC. STORAGE (SF)	TOTAL STORAGE (SF)
12-35C	0	0	33	23	0.00	0.00
12-35F	3	0	15	23	7.19	7.19
12-35C	0	0	33	23	0.00	0.00
12-35F	3	0	18	23	8.63	8.63
12-35J	0	1	33	23	0.00	5.27
12-35H	1	0	24	12	2.00	2.00
12-35K	0	1	33	12	0.00	2.75
12-35H	1	0	30	12	2.50	2.50
12-35I	1	0	15	12	1.25	1.25
12-35K	0	1	30	12	0.00	2.50
12-35H	1	0	30	12	2.50	2.50
12-35I	1	0	18	12	1.50	1.50
			TOTAL:		**25.56**	**36.08**
			% ACC.:		**70.8%**	

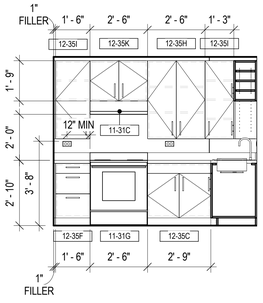

B2 - KITCHEN B (4)
3/8" = 1'-0"

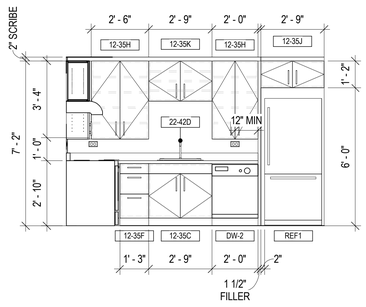

B2 - KITCHEN A (3)
3/8" = 1'-0"

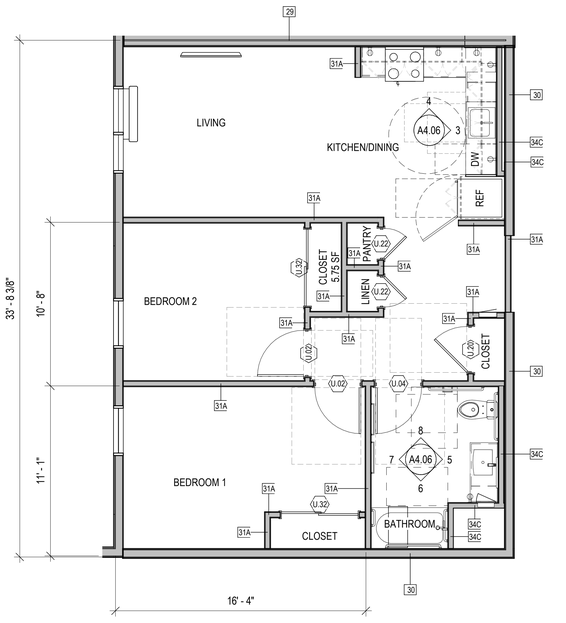

UNIT TYPE B2 - MOBILITY ACCESSIBLE (CBC 11B) (1)
1/4" = 1'-0"

810 GSF
5 UNITS

UNIT TYPE LEGEND

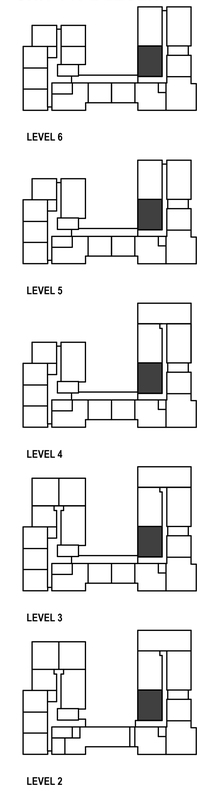

0' 2' 4' 8' 16'

SCALE: 1/4" = 1'-0"

PYATOK
1611 TELEGRAPH AVE.
SUITE 200
OAKLAND, CA 94612
T. 510.465.7010 | F. 510.465.8575
www.pyatok.com

THE UNITY COUNCIL
1900 FRUITVALE AVE
#2A
OAKLAND, CA 94601

2700 INTERNATIONAL
OAKLAND, CA 94601

STAMP:

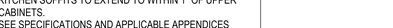

ISSUE SCHEDULE

100 SD	5/11/22
50 DD	7/15/22
100 DD	9/16/22
50 CD	11/18/22
PERMIT SET	12/09/22

REVISION SCHEDULE

NO.	ISSUE	DATE

JOB NUMBER:	1937
DRAWN BY:	MA, DV, TN, MO, SP
CHECKED BY:	Checker
ISSUE DATE:	12/09/22
SCALE:	As indicated

TITLE:
UNIT TYPE B2 - PLANS, ELEVATIONS, RCPS

SHEET:
A4.06

PRELIMINARY - Not for Construction -

© 2019 PYATOK ARCHITECTURE & URBAN DESIGN

12/8/2022 6:09:37 PM

KEYNOTE LEGEND	
#	KEYNOTE
10-28A	TOILET PAPER HOLDER, LOCATED PER CBC 11B-604.9.6 @ MOBILITY ACCESSIBLE UNITS
10-28C	MIRROR
11-31B	ADAPTABLE ELECTRIC RANGE
11-31C	RANGE HOOD
12-35A	CASEWORK: BATH VANITY SINK CABT., 21" DEEP W/ REMOVABLE FRONT/BASE
12-35B	CASEWORK: BATH VANITY CABT., 21" DEEP W/ 4 DRAWERS
12-35C	CASEWORK: KIT. SINK BASE CABT., 23" DEEP W/ REMOVABLE FRONT/BASE
12-35F	CASEWORK: KIT. DRAWER BASE CABT., 23" DEEP
12-35H	CASEWORK: KIT. UPPER CABT., 12" DEEP, DOUBLE DOOR, ADJUSTABLE SHELVES (DASHED)
12-35I	CASEWORK: KIT. UPPER CABT., 12" DEEP, SINGLE DOOR, ADJUSTABLE SHELVES (DASHED)
12-35J	CASEWORK: KIT. UPPER CABT., 24" DEEP, ABV. REF., ADJUSTABLE SHELVES (DASHED)
12-35K	CASEWORK: KIT. UPPER CABT., 12" DEEP, ABV. RANGE HOOD OR SINK OR WATERCLOSET
22-42A	TOILET, 17" MIN. 19" MAX. SEAT HEIGHT, S.P.D.
22-42B	LAVATORY SINK, S.P.D.
22-42D	KITCHEN SINK, S.P.D.
22-48A	BATHTUB, 32" X 60", WITH SHOWER/TUB CONTROLS - PROVIDE BLOCKING FOR GRAB BARS
26-51A	INTERIOR LIGHTING, WALL-MOUNTED LINEAR VANITY LIGHT FIXTURE, S.E.D.
26-51B	INTERIOR LIGHTING, CEILING-MOUNTED LIGHT FIXTURE, S.E.D.
26-51S	INTERIOR LIGHTING, CEILING FAN WITH LIGHT, S.E.D.
DW-1	DISHWASHER
REF1	REFRIGERATOR

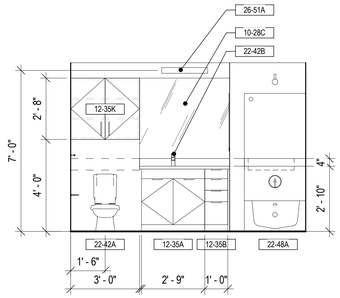

B3 - BATHROOM D (8)
3/8" = 1'-0"

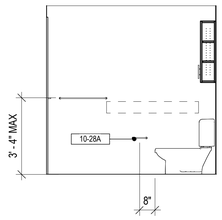

B3 - BATHROOM C (7)
3/8" = 1'-0"

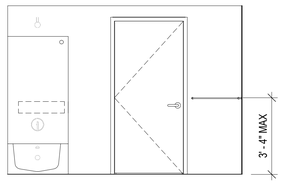

B3 - BATHROOM B (6)
3/8" = 1'-0"

B3 - BATHROOM A (5)
3/8" = 1'-0"

B3 - KITCHEN B (4)
3/8" = 1'-0"

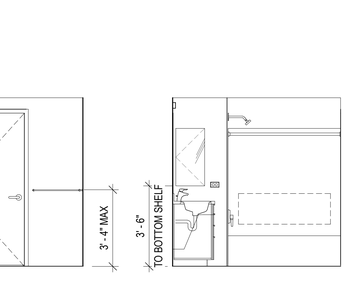

B3 - KITCHEN A (3)
3/8" = 1'-0"

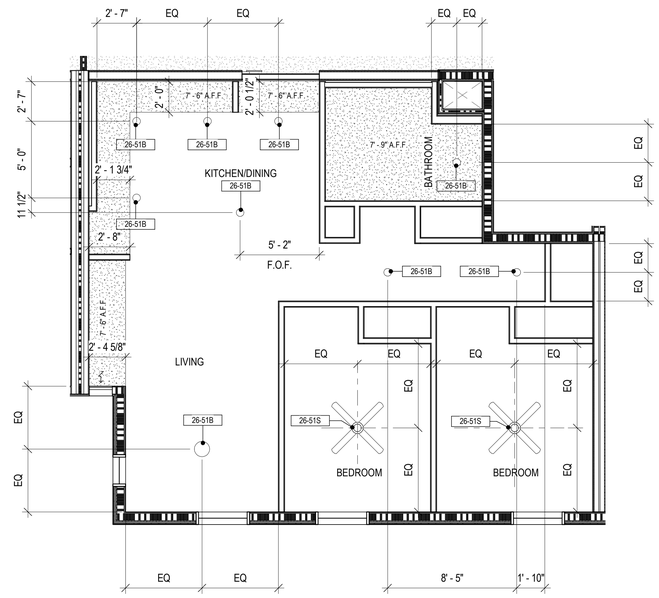

UNIT B3 - RCP (2)
1/4" = 1'-0"

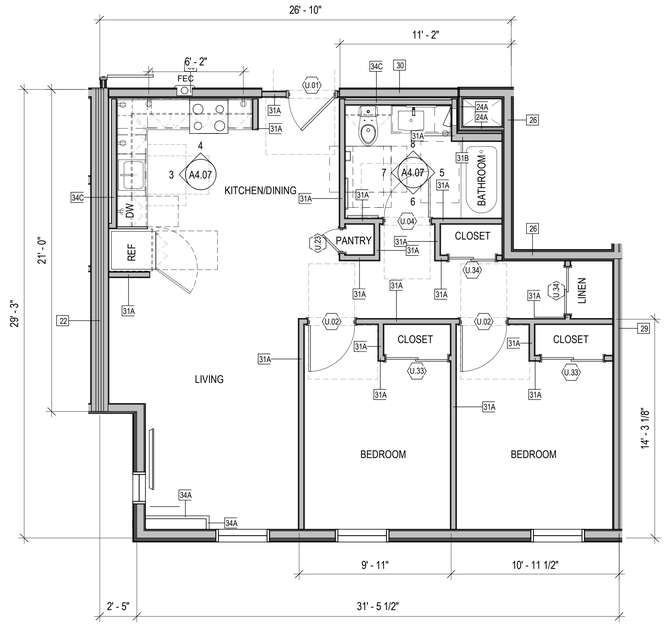

825 GSF
5 UNITS

UNIT TYPE B3 - ADAPTABLE (CBC 11B) (1)
1/4" = 1'-0"

INTERIOR ELEVATION NOTES

1. PROVIDE BLOCKING FOR ALL WALL-HUNG UNITS, ADJUSTABLE HEIGHT CABINETRY, MILLWORK, GRAB BARS AND ACCESSORIES.
2. SEE UNIT PLANS AND REFLECTED CEILING PLANS FOR EXTENT AND LOCATION OF GYPSUM BOARD SOFFITS.
3. PROVIDE WATERLINE TO REFRIGERATOR LOCATIONS FOR ICE MAKER WHERE SHOWN (SEE PLUMBING DRAWINGS).
4. @ ADAPTABLE UNITS, PROVIDE 30" x 48" CLEAR FLOOR SPACE CONFIGURED FOR FORWARD OR PARALLEL APPROACH CENTERED ON EACH SINK, DISHWASHER, REFRIGERATOR, AND WORKSURFACE. PROVIDE PARALLEL APPROACH AT RANGE.
5. @ ACCESSIBLE UNITS PROVIDE 30" x 48" CLEAR FLOOR SPACE CONFIGURED FOR PARALLEL APPROACH AT REFRIGERATOR, 30" x 48" CLEAR FLOOR SPACE CONFIGURED FOR FORWARD OR PARALLEL APPROACH CENTERED ON EACH SINK, DISHWASHER. WORK SURFACE TO BE PROVIDED ADJACENT TO RANGE. DISHWASHER TO BE ADJACENT TO SINK CABINET
6. PROVIDE ADJUSTABLE SHELVES TO ALL CABINETS, TYP.
7. KITCHEN SOFFITS TO EXTEND TO WITHIN 1" OF UPPER CABINETS.
8. SEE SPECIFICATIONS AND APPLICABLE APPENDICES FOR MORE INFORMATION ON KITCHEN AND BATH FIXTURES, FINISHES AND APPLIANCES.
9. SEE ELECTRICAL DRAWINGS FOR OUTLET TYPES. OUTLETS AND THERMOSTAT LOCATED PER ELEVATIONS ON 6/A4.00 AND G0.35 SHEETS.
10. VERIFY ALL DIMENSIONS IN FIELD PRIOR TO CABINET FABRICATION.
11. EXPOSED SIDES OF CABINETS TO MATCH FINISH AT FACE OF DOOR PANELS. FILLER AND END PANELS TO MATCH FACE OF FINISH AT DOOR PANELS.
12. PROVIDE SCRIBE STRIPS WHERE CABINETS INTERFACE WITH WALLS, CEILINGS OR SOFFITS

FINISH PLAN GENERAL NOTES

1. REFER TO FINISH SCHEDULE ON A10.00 AND FINISH MATERIALS APPENDIX 9 IN SPECIFICATIONS FOR MORE INFORMATION.
2. PROVIDE STRAIGHT, FLUSH BASE AT CARPETED AREAS, MATERIALS AS SCHEDULED, U.O.N.
3. COORDINATE INSTALLATION OF BASE WITH MILLWORK. DO NOT INSTALL BASE WHERE BUILT-IN CABINETS ARE INDICATED.
4. ALL PAINT FINISH OF METAL PARTS SHALL BE SEMI-GLOSS, U.O.N.
5. CARPET CONTRACTOR TO PROVIDE & INSTALL SPECIFIED REDUCTION STRIP AT DOORS WHERE ALL CARPET & RESILIENT FLOORING MEET.
6. FLOAT ALL AREAS WHERE FLOOR IS NOT LEVEL OR TRUE PRIOR TO FLOORING INSTALLATIONS.
7. PROVIDE 1/8" BRUSHED STAINLESS STEEL SCHLUTER STRIP AT CARPET/STONE OR CARPET/CERAMIC TILE THRESHOLD.
8. ALL WALLS TO BE PAINTED PES U.O.N. PROVIDE LEVEL FINISH AT GYPSUM BOARD WALLS AND CEILINGS AREAS, AS IDENTIFIED PER SPECIFICATION SECTION 09 29 00.
9. ALL WALL BASE TO BE WB U.O.N.
10. SEE UNIT PLAN SHEETS FOR UNIT FINISHES AND EXTENT.

UNIT TYPE LEGEND

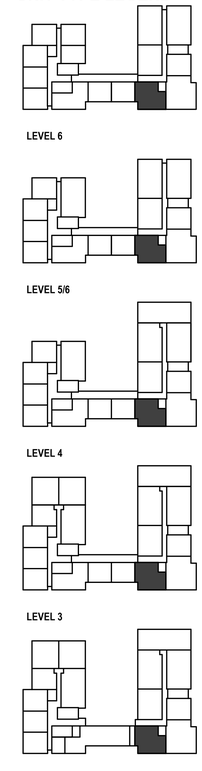

0' 2' 4' 8' 16'

SCALE: 1/4" = 1'-0"

PYATOK
1611 TELEGRAPH AVE.
SUITE 200
OAKLAND, CA 94612
T. 510.465.7010 | F. 510.465.8575
www.pyatok.com

THE UNITY COUNCIL
1900 FRUITVALE AVE
#2A
OAKLAND, CA 94601

2700 INTERNATIONAL
OAKLAND, CA 94601

STAMP:

ISSUE SCHEDULE

100 SD	5/11/22
50 DD	7/15/22
100 DD	9/16/22
50 CD	11/18/22
PERMIT SET	12/09/22

REVISION SCHEDULE

NO.	ISSUE	DATE

JOB NUMBER:	1937
DRAWN BY:	MA, DV, TN, MO, SP
CHECKED BY:	Checker
ISSUE DATE:	12/09/22
SCALE:	As indicated

TITLE:
UNIT TYPE B3 - PLANS, ELEVATIONS, RCPS

SHEET:
A4.07

PRELIMINARY - Not for Construction -

© 2019 PYATOK ARCHITECTURE & URBAN DESIGN

12/8/2022 6:09:41 PM

KEYNOTE LEGEND	
#	KEYNOTE
10-28A	TOILET PAPER HOLDER, LOCATED PER CBC 11B-604.9.6 @ MOBILITY ACCESSIBLE UNITS
10-28B	TOWEL BAR, MOUNT AT 40" MAX. A.F.F. - PROVIDE BLOCKING
10-28C	MIRROR
10-28D	RECESSED MEDICINE CABINET
11-31B	ADAPTABLE ELECTRIC RANGE
11-31C	RANGE HOOD
12-35A	CASEWORK: BATH VANITY SINK CABT., 21" DEEP W/ REMOVABLE FRONT/BASE
12-35B	CASEWORK: BATH VANITY CABT., 21" DEEP W/ 4 DRAWERS
12-35C	CASEWORK: KIT. SINK BASE CABT., 23" DEEP W/ REMOVABLE FRONT/BASE
12-35F	CASEWORK: KIT. DRAWER BASE CABT., 23" DEEP
12-35H	CASEWORK: KIT. UPPER CABT., 12" DEEP, DOUBLE DOOR, ADJUSTABLE SHELVES (DASHED)
12-35I	CASEWORK: KIT. UPPER CABT., 12" DEEP, SINGLE DOOR, ADJUSTABLE SHELVES (DASHED)
12-35J	CASEWORK: KIT. UPPER CABT., 24" DEEP, ABV. REF., ADJUSTABLE SHELVES (DASHED)
12-35K	CASEWORK: KIT. UPPER CABT., 12" DEEP, ABV. RANGE HOOD OR SINK OR WATERCLOSET
12-36A	COUNTERTOP WITH 4" BACKSPLASH, SEE FINISH SCHEDULE
22-42B	LAVATORY SINK, S.P.D.
22-42D	KITCHEN SINK, S.P.D.
22-48A	BATHTUB, 32" X 60", WITH SHOWER/TUB CONTROLS - PROVIDE BLOCKING FOR GRAB BARS
26-51A	INTERIOR LIGHTING, WALL-MOUNTED LINEAR VANITY LIGHT FIXTURE, S.E.D.
26-51B	INTERIOR LIGHTING, CEILING-MOUNTED LIGHT FIXTURE, S.E.D.
26-51S	INTERIOR LIGHTING, CEILING FAN WITH LIGHT, S.E.D.
DW-1	DISHWASHER
RBH	ROBE HOOK
REF1	REFRIGERATOR

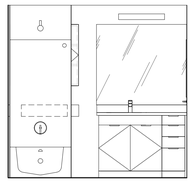

B4 - BATHROOM E 9
3/8" = 1'-0"

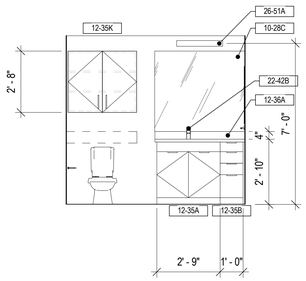

B4 - BATHROOM D 8
3/8" = 1'-0"

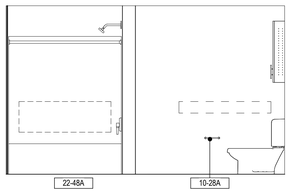

B4 - BATHROOM C 7
3/8" = 1'-0"

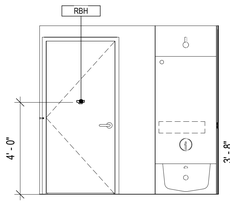

B4 - BATHROOM B 6
3/8" = 1'-0"

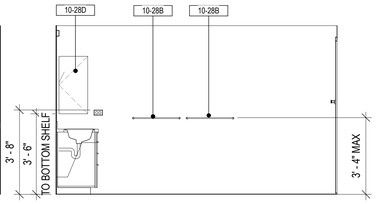

B4 - BATHROOM A 5
3/8" = 1'-0"

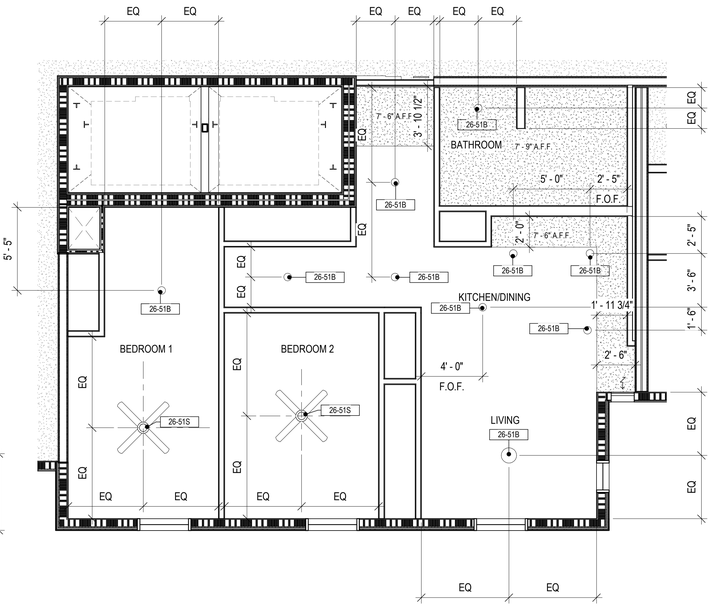

UNIT B4 - RCP 2
1/4" = 1'-0"

INTERIOR ELEVATION NOTES

1. PROVIDE BLOCKING FOR ALL WALL-HUNG UNITS, ADJUSTABLE HEIGHT CABINETRY, MILLWORK, GRAB BARS AND ACCESSORIES.
2. SEE UNIT PLANS AND REFLECTED CEILING PLANS FOR EXTENT AND LOCATION OF GYPSUM BOARD SOFFITS.
3. PROVIDE WATERLINE TO REFRIGERATOR LOCATIONS FOR ICE MAKER WHERE SHOWN (SEE PLUMBING DRAWINGS).
4. @ ADAPTABLE UNITS, PROVIDE 30" x 48" CLEAR FLOOR SPACE CONFIGURED FOR FORWARD OR PARALLEL APPROACH CENTERED ON EACH SINK, DISHWASHER, REFRIGERATOR, AND WORKSURFACE. PROVIDE PARALLEL APPROACH AT RANGE.
5. @ ACCESSIBLE UNITS PROVIDE 30" x 48" CLEAR FLOOR SPACE CONFIGURED FOR PARALLEL APPROACH AT REFRIGERATOR, 30" x 48" CLEAR FLOOR SPACE CONFIGURED FOR FORWARD OR PARALLEL APPROACH CENTERED ON EACH SINK, DISHWASHER. WORK SURFACE TO BE PROVIDED ADJACENT TO RANGE. DISHWASHER TO BE ADJACENT TO SINK CABINET
6. PROVIDE ADJUSTABLE SHELVES TO ALL CABINETS, TYP.
7. KITCHEN SOFFITS TO EXTEND TO WITHIN 1" OF UPPER CABINETS.
8. SEE SPECIFICATIONS AND APPLICABLE APPENDICES FOR MORE INFORMATION ON KITCHEN AND BATH FIXTURES, FINISHES AND APPLIANCES.
9. SEE ELECTRICAL DRAWINGS FOR OUTLET TYPES. OUTLETS AND THERMOSTAT LOCATED PER ELEVATIONS ON 6/A4.00 AND G0.35 SHEETS.
10. VERIFY ALL DIMENSIONS IN FIELD PRIOR TO CABINET FABRICATION.
11. EXPOSED SIDES OF CABINETS TO MATCH FINISH AT FACE OF DOOR PANELS. FILLER AND END PANELS TO MATCH FACE OF FINISH AT DOOR PANELS.
12. PROVIDE SCRIBE STRIPS WHERE CABINETS INTERFACE WITH WALLS, CEILINGS OR SOFFITS

FINISH PLAN GENERAL NOTES

1. REFER TO FINISH SCHEDULE ON A10.00 AND FINISH MATERIALS APPENDIX 9 IN SPECIFICATIONS FOR MORE INFORMATION.
2. PROVIDE STRAIGHT, FLUSH BASE AT CARPETED AREAS, MATERIALS AS SCHEDULED, U.O.N.
3. COORDINATE INSTALLATION OF BASE WITH MILLWORK. DO NOT INSTALL BASE WHERE BUILT-IN CABINETS ARE INDICATED.
4. ALL PAINT FINISH OF METAL PARTS SHALL BE SEMI-GLOSS, U.O.N.
5. CARPET CONTRACTOR TO PROVIDE & INSTALL SPECIFIED REDUCTION STRIP AT DOORS WHERE ALL CARPET & RESILIENT FLOORING MEET.
6. FLOAT ALL AREAS WHERE FLOOR IS NOT LEVEL OR TRUE PRIOR TO FLOORING INSTALLATIONS.
7. PROVIDE 1/8" BRUSHED STAINLESS STEEL SCHLUTER STRIP AT CARPET/STONE OR CARPET/CERAMIC TILE THRESHOLD.
8. ALL WALLS TO BE PAINTED PES U.O.N. PROVIDE LEVEL FINISH AT GYPSUM BOARD WALLS AND CEILINGS AREAS, AS IDENTIFIED PER SPECIFICATION SECTION 09 29 00.
9. ALL WALL BASE TO BE WB U.O.N.
10. SEE UNIT PLAN SHEETS FOR UNIT FINISHES AND EXTENT.

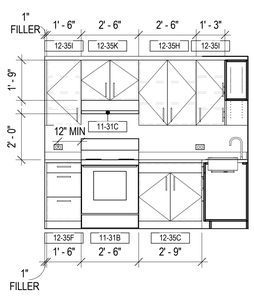

B4 - KITCHEN B 4
3/8" = 1'-0"

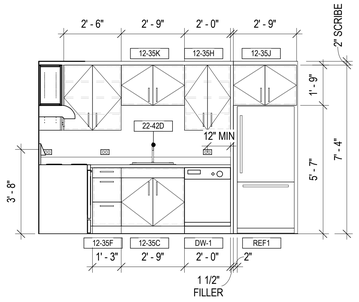

B4 - KITCHEN A 3
3/8" = 1'-0"

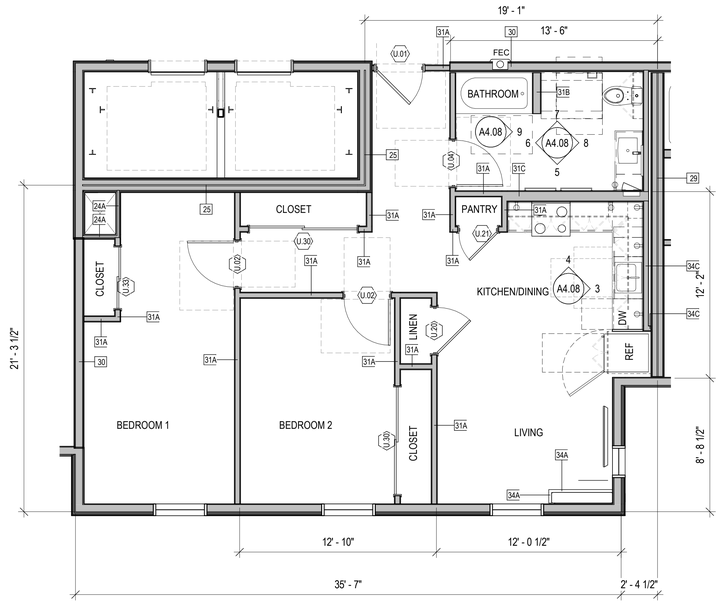

798 GSF
4 UNITS

UNIT TYPE B4 - ADAPTABLE (CBC 11B) 1
1/4" = 1'-0"

UNIT TYPE LEGEND

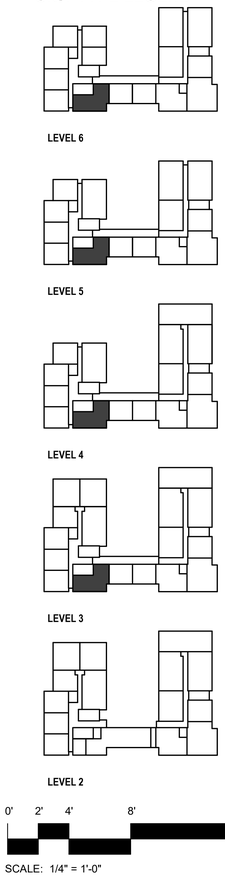

0' 2' 4' 8' 16'

SCALE: 1/4" = 1'-0"

PYATOK
1611 TELEGRAPH AVE.
SUITE 200
OAKLAND, CA 94612
T. 510.465.7010 | F. 510.465.8575
www.pyatok.com

THE UNITY COUNCIL
1900 FRUITVALE AVE
#2A
OAKLAND, CA 94601

2700 INTERNATIONAL
OAKLAND, CA 94601

STAMP:
LICENSED ARCHITECT
PETER WALLER
C-23554
4/30/2023
STATE OF CALIFORNIA

ISSUE SCHEDULE

100 SD	5/11/22
50 DD	7/15/22
100 DD	9/16/22
50 CD	11/18/22
PERMIT SET	12/09/22

REVISION SCHEDULE

NO.	ISSUE	DATE

JOB NUMBER:	1937
DRAWN BY:	MA, DV, TN, MO, SP
CHECKED BY:	Checker
ISSUE DATE:	12/09/22
SCALE:	As indicated

TITLE:
UNIT TYPE B4 - PLANS, ELEVATIONS, RCPS

SHEET:
A4.08

PRELIMINARY - Not for Construction -

© 2019 PYATOK ARCHITECTURE & URBAN DESIGN

12/8/2022 6:09:45 PM

KEYNOTE LEGEND	
#	KEYNOTE
10-28A	TOILET PAPER HOLDER, LOCATED PER CBC 11B-604.9.6 @ MOBILITY ACCESSIBLE UNITS
10-28B	TOWEL BAR, MOUNT AT 40" MAX. A.F.F. - PROVIDE BLOCKING
10-28C	MIRROR
10-28D	RECESSED MEDICINE CABINET
11-31B	ADAPTABLE ELECTRIC RANGE
11-31C	RANGE HOOD
12-35A	CASEWORK: BATH VANITY SINK CABT., 21" DEEP W/ REMOVABLE FRONT/BASE
12-35B	CASEWORK: BATH VANITY CABT., 21" DEEP W/ 4 DRAWERS
12-35C	CASEWORK: KIT. SINK BASE CABT., 23" DEEP W/ REMOVABLE FRONT/BASE
12-35F	CASEWORK: KIT. DRAWER BASE CABT., 23" DEEP
12-35H	CASEWORK: KIT. UPPER CABT., 12" DEEP, DOUBLE DOOR, ADJUSTABLE SHELVES (DASHED)
12-35I	CASEWORK: KIT. UPPER CABT., 12" DEEP, SINGLE DOOR, ADJUSTABLE SHELVES (DASHED)
12-35J	CASEWORK: KIT. UPPER CABT., 24" DEEP, ABV. REF., ADJUSTABLE SHELVES (DASHED)
12-35K	CASEWORK: KIT. UPPER CABT., 12" DEEP, ABV. RANGE HOOD OR SINK OR WATERCLOSET
12-35L	CASEWORK: KIT. PANTRY CABT., 24" DEEP, ADJUSTABLE SHELVES (DASHED)
12-35N	CASEWORK: KIT. BASE CABT., 23" DEEP W/ REMOVABLE FRONT/BASE, DOUBLE DOOR, DOUBLE DRAWER, ADJUSTABLE SHELVES (DASHED)
12-36A	COUNTERTOP WITH 4" BACKSPLASH, SEE FINISH SCHEDULE
22-42A	TOILET, 17" MIN. 19" MAX. SEAT HEIGHT, S.P.D.
22-42B	LAVATORY SINK, S.P.D.
22-42D	KITCHEN SINK, S.P.D.
26-51A	INTERIOR LIGHTING, WALL-MOUNTED LINEAR VANITY LIGHT FIXTURE, S.E.D.
26-51B	INTERIOR LIGHTING, CEILING-MOUNTED LIGHT FIXTURE, S.E.D.
26-51S	INTERIOR LIGHTING, CEILING FAN WITH LIGHT, S.E.D.
DW-1	DISHWASHER
REF1	REFRIGERATOR

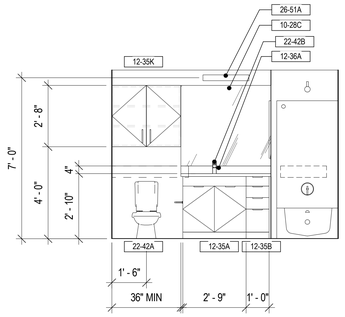

B5 - BATHROOM D 7
3/8" = 1'-0"

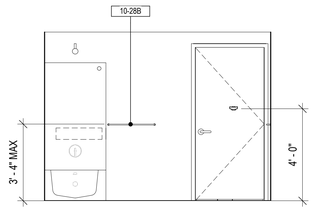

B5 - BATHROOM C 6
3/8" = 1'-0"

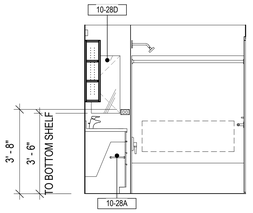

B5 - BATHROOM B 5
3/8" = 1'-0"

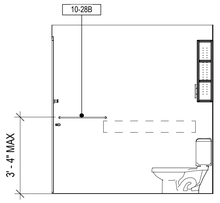

B5 - BATHROOM A 4
3/8" = 1'-0"

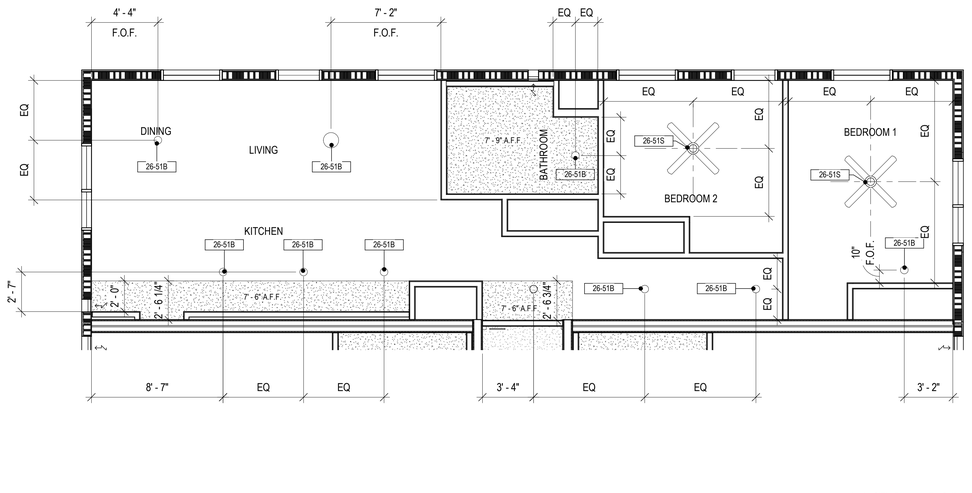

UNIT B5 - RCP 2
1/4" = 1'-0"

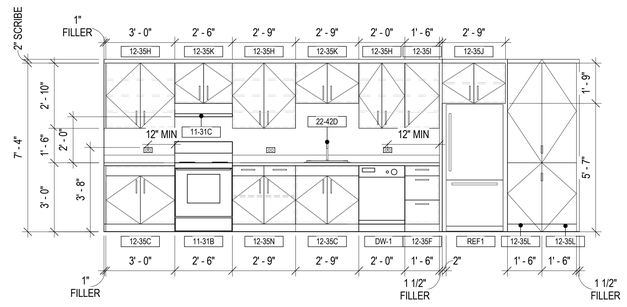

B5 - KITCHEN A 3
3/8" = 1'-0"

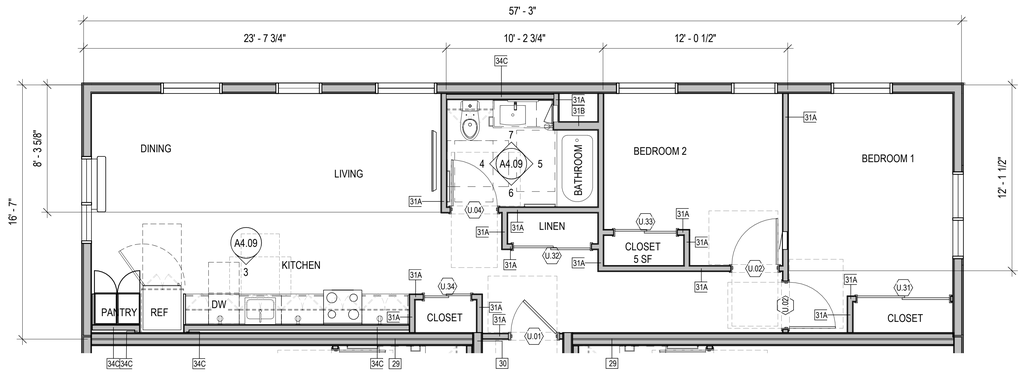

875 GSF
3 UNITS

UNIT TYPE B5 - ADAPTABLE (CBC 11B) 1
1/4" = 1'-0"

INTERIOR ELEVATION NOTES

1. PROVIDE BLOCKING FOR ALL WALL-HUNG UNITS, ADJUSTABLE HEIGHT CABINETRY, MILLWORK, GRAB BARS AND ACCESSORIES.
2. SEE UNIT PLANS AND REFLECTED CEILING PLANS FOR EXTENT AND LOCATION OF GYPSUM BOARD SOFFITS.
3. PROVIDE WATERLINE TO REFRIGERATOR LOCATIONS FOR ICE MAKER WHERE SHOWN (SEE PLUMBING DRAWINGS).
4. @ ADAPTABLE UNITS, PROVIDE 30" x 48" CLEAR FLOOR SPACE CONFIGURED FOR FORWARD OR PARALLEL APPROACH CENTERED ON EACH SINK, DISHWASHER, REFRIGERATOR, AND WORKSURFACE. PROVIDE PARALLEL APPROACH AT RANGE.
5. @ ACCESSIBLE UNITS PROVIDE 30" x 48" CLEAR FLOOR SPACE CONFIGURED FOR PARALLEL APPROACH AT REFRIGERATOR, 30" x 48" CLEAR FLOOR SPACE CONFIGURED FOR FORWARD OR PARALLEL APPROACH CENTERED ON EACH SINK, DISHWASHER. WORK SURFACE TO BE PROVIDED ADJACENT TO RANGE. DISHWASHER TO BE ADJACENT TO SINK CABINET
6. PROVIDE ADJUSTABLE SHELVES TO ALL CABINETS, TYP.
7. KITCHEN SOFFITS TO EXTEND TO WITHIN 1" OF UPPER CABINETS.
8. SEE SPECIFICATIONS AND APPLICABLE APPENDICES FOR MORE INFORMATION ON KITCHEN AND BATH FIXTURES, FINISHES AND APPLIANCES.
9. SEE ELECTRICAL DRAWINGS FOR OUTLET TYPES. OUTLETS AND THERMOSTAT LOCATED PER ELEVATIONS ON 6/A4.00 AND G0.35 SHEETS.
10. VERIFY ALL DIMENSIONS IN FIELD PRIOR TO CABINET FABRICATION.
11. EXPOSED SIDES OF CABINETS TO MATCH FINISH AT FACE OF DOOR PANELS. FILLER AND END PANELS TO MATCH FACE OF FINISH AT DOOR PANELS.
12. PROVIDE SCRIBE STRIPS WHERE CABINETS INTERFACE WITH WALLS, CEILINGS OR SOFFITS

FINISH PLAN GENERAL NOTES

1. REFER TO FINISH SCHEDULE ON A10.00 AND FINISH MATERIALS APPENDIX 9 IN SPECIFICATIONS FOR MORE INFORMATION.
2. PROVIDE STRAIGHT, FLUSH BASE AT CARPETED AREAS, MATERIALS AS SCHEDULED, U.O.N.
3. COORDINATE INSTALLATION OF BASE WITH MILLWORK. DO NOT INSTALL BASE WHERE BUILT-IN CABINETS ARE INDICATED.
4. ALL PAINT FINISH OF METAL PARTS SHALL BE SEMI-GLOSS, U.O.N.
5. CARPET CONTRACTOR TO PROVIDE & INSTALL SPECIFIED REDUCTION STRIP AT DOORS WHERE ALL CARPET & RESILIENT FLOORING MEET.
6. FLOAT ALL AREAS WHERE FLOOR IS NOT LEVEL OR TRUE PRIOR TO FLOORING INSTALLATIONS.
7. PROVIDE 1/8" BRUSHED STAINLESS STEEL SCHLUTER STRIP AT CARPET/STONE OR CARPET/CERAMIC TILE THRESHOLD.
8. ALL WALLS TO BE PAINTED PES U.O.N. PROVIDE LEVEL FINISH AT GYPSUM BOARD WALLS AND CEILINGS AREAS, AS IDENTIFIED PER SPECIFICATION SECTION 09 29 00.
9. ALL WALL BASE TO BE WB U.O.N.
10. SEE UNIT PLAN SHEETS FOR UNIT FINISHES AND EXTENT.

UNIT TYPE LEGEND

SCALE: 1/4" = 1'-0"

PYATOK
1611 TELEGRAPH AVE.
SUITE 200
OAKLAND, CA 94612
T. 510.465.7010 | F. 510.465.8575
www.pyatok.com

THE UNITY COUNCIL
1900 FRUITVALE AVE
#2A
OAKLAND, CA 94601

2700 INTERNATIONAL

OAKLAND, CA 94601

STAMP:

ISSUE SCHEDULE

100 SD	5/11/22
50 DD	7/15/22
100 DD	9/16/22
50 CD	11/18/22
PERMIT SET	12/09/22

REVISION SCHEDULE

NO.	ISSUE	DATE

JOB NUMBER:	1937
DRAWN BY:	MA, DV, TN, MO, SP
CHECKED BY:	Checker
ISSUE DATE:	12/09/22
SCALE:	As indicated

TITLE:

UNIT TYPE B5 - PLANS, ELEVATIONS, RCPS

SHEET:

A4.09

PRELIMINARY - Not for Construction -

© 2019 PYATOK ARCHITECTURE & URBAN DESIGN

12/8/2022 6:09:49 PM

KEYNOTE LEGEND	
#	KEYNOTE
10-28A	TOILET PAPER HOLDER, LOCATED PER CBC 11B-604.9.6 @ MOBILITY ACCESSIBLE UNITS
10-28B	TOWEL BAR, MOUNT AT 40" MAX. A.F.F. - PROVIDE BLOCKING
10-28C	MIRROR
10-28D	RECESSED MEDICINE CABINET
10-28E	TOILET GRAB BAR
10-28G	GRAB BARS - PROVIDE BLOCKING. SEE TS0.31 FOR MORE INFORMATION
11-31B	ADAPTABLE ELECTRIC RANGE
11-31C	RANGE HOOD
12-35A	CASEWORK: BATH VANITY SINK CABT., 21" DEEP W/ REMOVABLE FRONT/BASE
12-35B	CASEWORK: BATH VANITY CABT., 21" DEEP W/ 4 DRAWERS
12-35C	CASEWORK: KIT. SINK BASE CABT., 23" DEEP W/ REMOVABLE FRONT/BASE
12-35F	CASEWORK: KIT. DRAWER BASE CABT., 23" DEEP
12-35H	CASEWORK: KIT. UPPER CABT., 12" DEEP, DOUBLE DOOR, ADJUSTABLE SHELVES (DASHED)
12-35I	CASEWORK: KIT. UPPER CABT., 12" DEEP, SINGLE DOOR, ADJUSTABLE SHELVES (DASHED)
12-35J	CASEWORK: KIT. UPPER CABT., 24" DEEP, ABV. REF., ADJUSTABLE SHELVES (DASHED)
12-35K	CASEWORK: KIT. UPPER CABT., 12" DEEP, ABV. RANGE HOOD OR SINK OR WATERCLOSET
12-35N	CASEWORK: KIT. BASE CABT., 23" DEEP W/ REMOVABLE FRONT/BASE, DOUBLE DOOR, DOUBLE DRAWER, ADJUSTABLE SHELVES (DASHED)
12-36A	COUNTERTOP WITH 4" BACKSPLASH, SEE FINISH SCHEDULE
22-42A	TOILET, 17" MIN. 19" MAX. SEAT HEIGHT, S.P.D.
22-42B	LAVATORY SINK, S.P.D.
22-42D	KITCHEN SINK, S.P.D.
22-48B	BATHTUB, 32" X 60", WITH SHOWER/TUB CONTROLS - ACCESSIBLE ATTACHED ENCLOSURE WITH GRAB BARS AND SEAT, WITH REMOVABLE SPRAY NOZZLE
26-51A	INTERIOR LIGHTING, WALL-MOUNTED LINEAR VANITY LIGHT FIXTURE, S.E.D.
26-51S	INTERIOR LIGHTING, CEILING FAN WITH LIGHT, S.E.D.
DW-2	ACCESSIBLE DISHWASHER
REF1	REFRIGERATOR

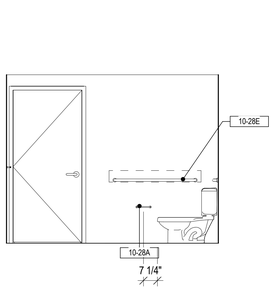

C1 - BATHROOM D (8)
3/8" = 1'-0"

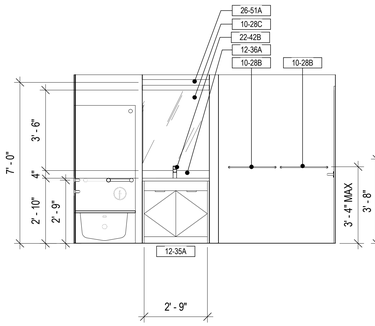

C1 - BATHROOM C (7)
3/8" = 1'-0"

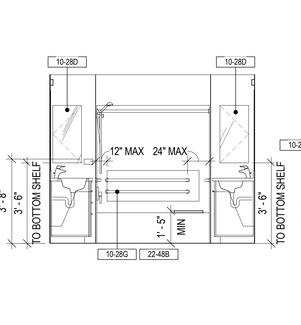

C1 - BATHROOM B (6)
3/8" = 1'-0"

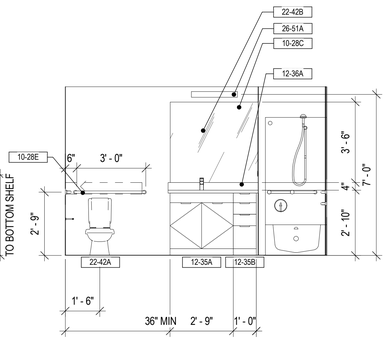

C1 - BATHROOM A (5)
3/8" = 1'-0"

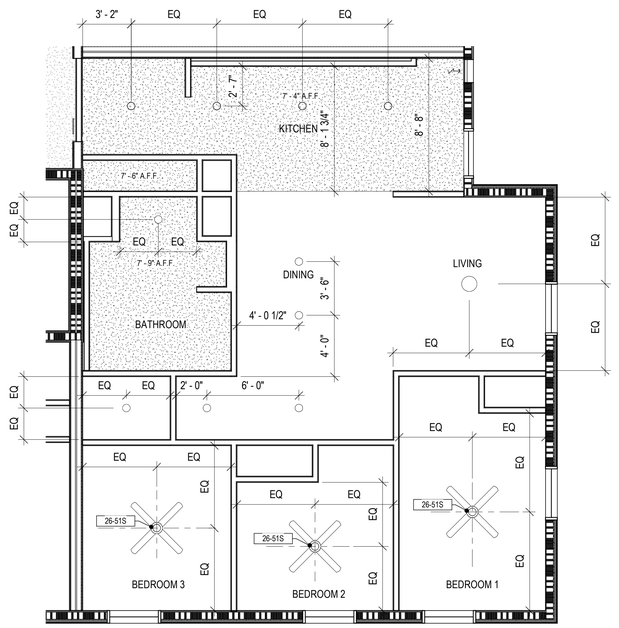

UNIT C1 - RCP (2)
1/4" = 1'-0"

INTERIOR ELEVATION NOTES

1. PROVIDE BLOCKING FOR ALL WALL-HUNG UNITS, ADJUSTABLE HEIGHT CABINETRY, MILLWORK, GRAB BARS AND ACCESSORIES.
2. SEE UNIT PLANS AND REFLECTED CEILING PLANS FOR EXTENT AND LOCATION OF GYPSUM BOARD SOFFITS.
3. PROVIDE WATERLINE TO REFRIGERATOR LOCATIONS FOR ICE MAKER WHERE SHOWN (SEE PLUMBING DRAWINGS).
4. @ ADAPTABLE UNITS, PROVIDE 30" x 48" CLEAR FLOOR SPACE CONFIGURED FOR FORWARD OR PARALLEL APPROACH CENTERED ON EACH SINK, DISHWASHER, REFRIGERATOR, AND WORKSURFACE. PROVIDE PARALLEL APPROACH AT RANGE.
5. @ ACCESSIBLE UNITS PROVIDE 30" x 48" CLEAR FLOOR SPACE CONFIGURED FOR PARALLEL APPROACH AT REFRIGERATOR, 30" x 48" CLEAR FLOOR SPACE CONFIGURED FOR FORWARD OR PARALLEL APPROACH CENTERED ON EACH SINK, DISHWASHER. WORK SURFACE TO BE PROVIDED ADJACENT TO RANGE. DISHWASHER TO BE ADJACENT TO SINK CABINET
6. PROVIDE ADJUSTABLE SHELVES TO ALL CABINETS, TYP.
7. KITCHEN SOFFITS TO EXTEND TO WITHIN 1" OF UPPER CABINETS.
8. SEE SPECIFICATIONS AND APPLICABLE APPENDICES FOR MORE INFORMATION ON KITCHEN AND BATH FIXTURES, FINISHES AND APPLIANCES.
9. SEE ELECTRICAL DRAWINGS FOR OUTLET TYPES. OUTLETS AND THERMOSTAT LOCATED PER ELEVATIONS ON 6/A4.00 AND G0.35 SHEETS.
10. VERIFY ALL DIMENSIONS IN FIELD PRIOR TO CABINET FABRICATION.
11. EXPOSED SIDES OF CABINETS TO MATCH FINISH AT FACE OF DOOR PANELS. FILLER AND END PANELS TO MATCH FACE OF FINISH AT DOOR PANELS.
12. PROVIDE SCRIBE STRIPS WHERE CABINETS INTERFACE WITH WALLS, CEILINGS OR SOFFITS

FINISH PLAN GENERAL NOTES

1. REFER TO FINISH SCHEDULE ON A10.00 AND FINISH MATERIALS APPENDIX 9 IN SPECIFICATIONS FOR MORE INFORMATION.
2. PROVIDE STRAIGHT, FLUSH BASE AT CARPETED AREAS, MATERIALS AS SCHEDULED, U.O.N.
3. COORDINATE INSTALLATION OF BASE WITH MILLWORK. DO NOT INSTALL BASE WHERE BUILT-IN CABINETS ARE INDICATED.
4. ALL PAINT FINISH OF METAL PARTS SHALL BE SEMI-GLOSS, U.O.N.
5. CARPET CONTRACTOR TO PROVIDE & INSTALL SPECIFIED REDUCTION STRIP AT DOORS WHERE ALL CARPET & RESILIENT FLOORING MEET.
6. FLOAT ALL AREAS WHERE FLOOR IS NOT LEVEL OR TRUE PRIOR TO FLOORING INSTALLATIONS.
7. PROVIDE 1/8" BRUSHED STAINLESS STEEL SCHLUTER STRIP AT CARPET/STONE OR CARPET/CERAMIC TILE THRESHOLD.
8. ALL WALLS TO BE PAINTED PES U.O.N. PROVIDE LEVEL FINISH AT GYPSUM BOARD WALLS AND CEILINGS AREAS, AS IDENTIFIED PER SPECIFICATION SECTION 09 29 00.
9. ALL WALL BASE TO BE WB U.O.N.
10. SEE UNIT PLAN SHEETS FOR UNIT FINISHES AND EXTENT.

UNIT C1- ACCISSIBLE KITCHEN STORAGE TABLE						
CAB	ACC. SHELF & DRWR....	NON-ACC. SHELF & DRWR. CT	WIDTH (in)	DEPTH (in)	ACC. STORAGE (SF)	TOTAL STORAGE (SF)
12-35C	0	0	36	23	0.00	0.00
12-35N	1	1	33	23	5.27	10.54
12-35C	0	0	33	23	0.00	0.00
12-35F	3	0	18	23	8.63	8.63
12-35H	1	0	36	12	3.00	3.00
12-35K	0	1	30	12	0.00	2.50
12-35H	1	0	33	12	2.75	2.75
12-35K	0	1	33	12	0.00	2.75
12-35H	1	0	24	12	2.00	2.00
12-35I	1	0	18	12	1.50	1.50
12-35J	0	1	33	12	0.00	2.75
			TOTAL:		**23.15**	**36.42**
			% ACC.:		**63.6%**	

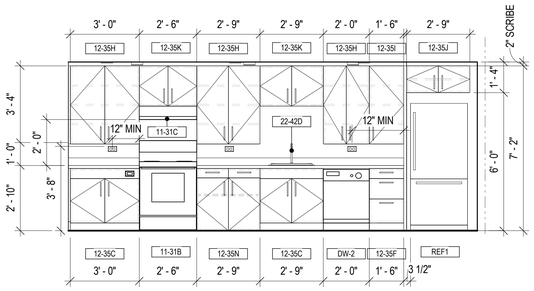

C1 - KITCHEN A (3)
3/8" = 1'-0"

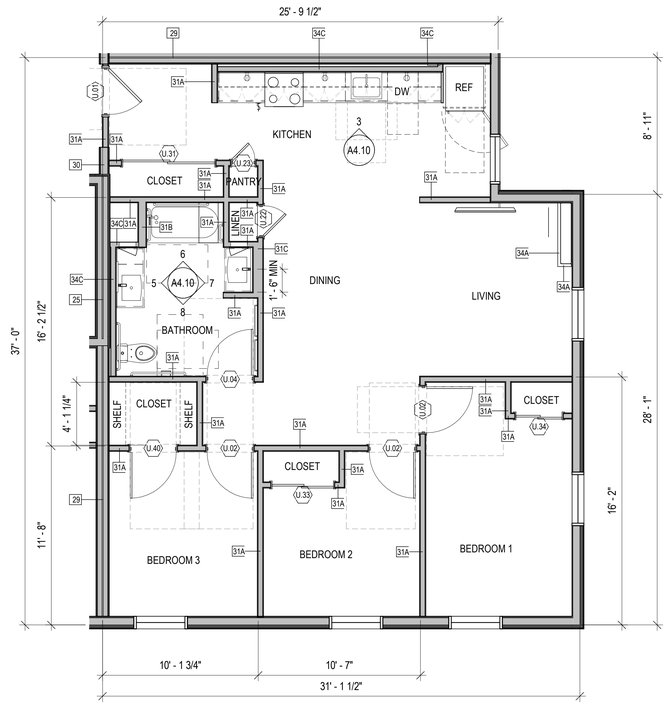

1037 GSF
5 UNITS

UNIT TYPE C1 - MOBILITY ACCESSIBLE (CBC 11B) (1)
1/4" = 1'-0"

UNIT TYPE LEGEND

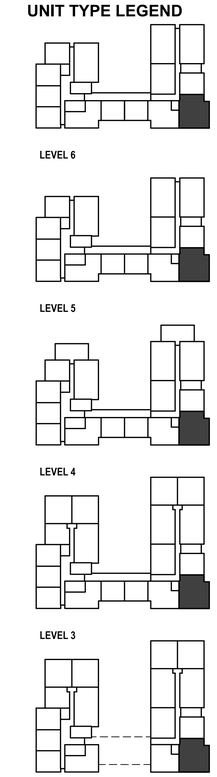

0' 2' 4' 8' 16'

SCALE: 1/4" = 1'-0"

PYATOK
1611 TELEGRAPH AVE.
SUITE 200
OAKLAND, CA 94612
T. 510.465.7010 | F. 510.465.8575
www.pyatok.com

THE UNITY COUNCIL
1900 FRUITVALE AVE
#2A
OAKLAND, CA 94601

2700 INTERNATIONAL
OAKLAND, CA 94601

STAMP:

ISSUE SCHEDULE

100 SD	5/11/22
50 DD	7/15/22
100 DD	9/16/22
50 CD	11/18/22
PERMIT SET	12/09/22

REVISION SCHEDULE

NO.	ISSUE	DATE

JOB NUMBER:	1937
DRAWN BY:	MA, DV, TN, MO, SP
CHECKED BY:	Checker
ISSUE DATE:	12/09/22
SCALE:	As indicated

TITLE:
UNIT TYPE C1 - PLANS, ELEVATIONS, RCPS

SHEET:
A4.10

PRELIMINARY - Not for Construction -

© 2019 PYATOK ARCHITECTURE & URBAN DESIGN

12/8/2022 6:09:55 PM

KEYNOTE LEGEND	
#	KEYNOTE
10-28A	TOILET PAPER HOLDER, LOCATED PER CBC 11B-604.9.6 @ MOBILITY ACCESSIBLE UNITS
10-28B	TOWEL BAR, MOUNT AT 40" MAX. A.F.F. - PROVIDE BLOCKING
10-28C	MIRROR
10-28D	RECESSED MEDICINE CABINET
11-31B	ADAPTABLE ELECTRIC RANGE
11-31C	RANGE HOOD
12-35A	CASEWORK: BATH VANITY SINK CABT., 21" DEEP W/ REMOVABLE FRONT/BASE
12-35B	CASEWORK: BATH VANITY CABT., 21" DEEP W/ 4 DRAWERS
12-35C	CASEWORK: KIT. SINK BASE CABT., 23" DEEP W/ REMOVABLE FRONT/BASE
12-35F	CASEWORK: KIT. DRAWER BASE CABT., 23" DEEP
12-35H	CASEWORK: KIT. UPPER CABT., 12" DEEP, DOUBLE DOOR, ADJUSTABLE SHELVES (DASHED)
12-35I	CASEWORK: KIT. UPPER CABT., 12" DEEP, SINGLE DOOR, ADJUSTABLE SHELVES (DASHED)
12-35J	CASEWORK: KIT. UPPER CABT., 24" DEEP, ABV. REF., ADJUSTABLE SHELVES (DASHED)
12-35K	CASEWORK: KIT. UPPER CABT., 12" DEEP, ABV. RANGE HOOD OR SINK OR WATERCLOSET
12-35N	CASEWORK: KIT. BASE CABT., 23" DEEP W/ REMOVABLE FRONT/BASE, DOUBLE DOOR, DOUBLE DRAWER, ADJUSTABLE SHELVES (DASHED)
12-36A	COUNTERTOP WITH 4" BACKSPLASH, SEE FINISH SCHEDULE
22-42A	TOILET, 17" MIN. 19" MAX. SEAT HEIGHT, S.P.D.
22-42B	LAVATORY SINK, S.P.D.
22-42D	KITCHEN SINK, S.P.D.
22-48A	BATHTUB, 32" X 60", WITH SHOWER/TUB CONTROLS - PROVIDE BLOCKING FOR GRAB BARS
26-51A	INTERIOR LIGHTING, WALL-MOUNTED LINEAR VANITY LIGHT FIXTURE, S.E.D.
26-51B	INTERIOR LIGHTING, CEILING-MOUNTED LIGHT FIXTURE, S.E.D.
26-51S	INTERIOR LIGHTING, CEILING FAN WITH LIGHT, S.E.D.
DW-1	DISHWASHER
RBH	ROBE HOOK
REF1	REFRIGERATOR

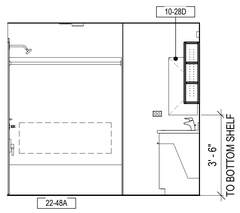

C2 - BATHROOM 2 D (13)
3/8" = 1'-0"

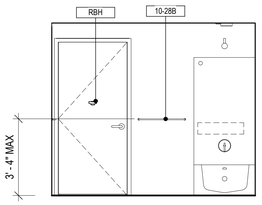

C2 - BATHROOM 2 C (12)
3/8" = 1'-0"

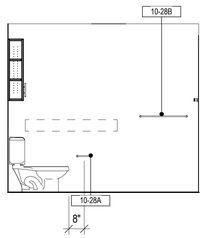

C2 - BATHROOM 2 B (11)
3/8" = 1'-0"

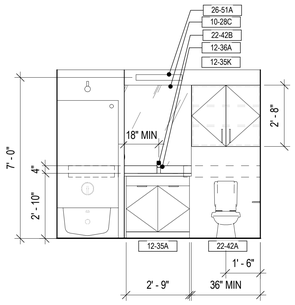

C2 - BATHROOM 2 A (10)
3/8" = 1'-0"

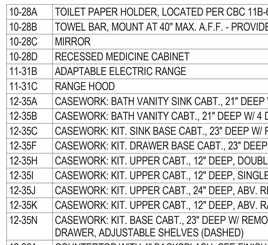

C2 - BATHROOM 1 D (9)
3/8" = 1'-0"

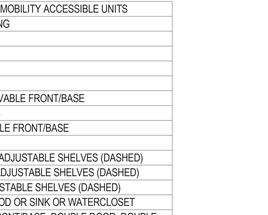

C2 - BATHROOM 1 C (8)
3/8" = 1'-0"

C2 - BATHROOM 1 B (7)
3/8" = 1'-0"

C2 - BATHROOM 1 A (6)
3/8" = 1'-0"

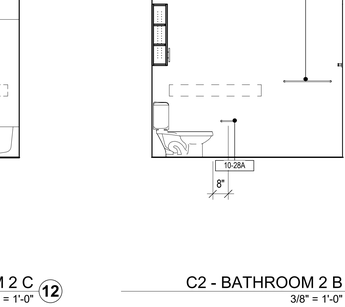

C2 - KITCHEN B (5)
3/8" = 1'-0"

C2 - KITCHEN A (4)
3/8" = 1'-0"

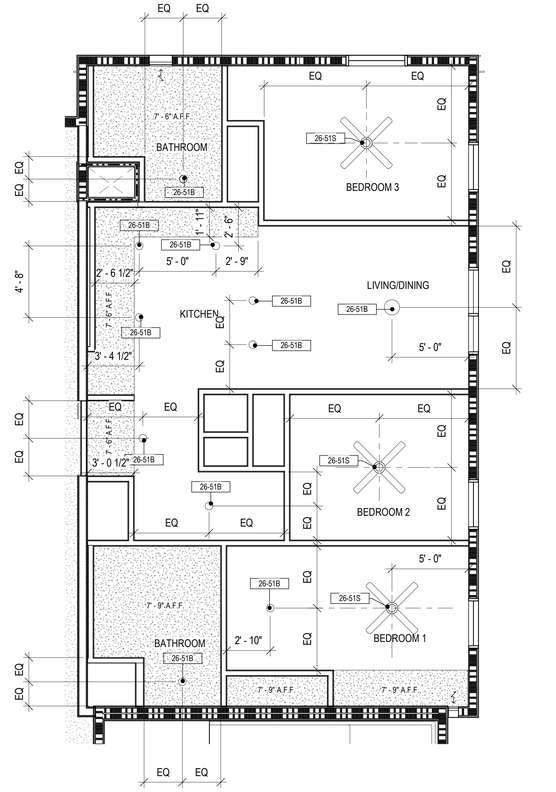

UNIT C2 - RCP (3)
1/4" = 1'-0"

INTERIOR ELEVATION NOTES

1. PROVIDE BLOCKING FOR ALL WALL-HUNG UNITS, ADJUSTABLE HEIGHT CABINETRY, MILLWORK, GRAB BARS AND ACCESSORIES.
2. SEE UNIT PLANS AND REFLECTED CEILING PLANS FOR EXTENT AND LOCATION OF GYPSUM BOARD SOFFITS.
3. PROVIDE WATERLINE TO REFRIGERATOR LOCATIONS FOR ICE MAKER WHERE SHOWN (SEE PLUMBING DRAWINGS).
4. @ ADAPTABLE UNITS, PROVIDE 30" x 48" CLEAR FLOOR SPACE CONFIGURED FOR FORWARD OR PARALLEL APPROACH CENTERED ON EACH SINK, DISHWASHER, REFRIGERATOR, AND WORKSURFACE. PROVIDE PARALLEL APPROACH AT RANGE.
5. @ ACCESSIBLE UNITS PROVIDE 30" x 48" CLEAR FLOOR SPACE CONFIGURED FOR PARALLEL APPROACH AT REFRIGERATOR, 30" x 48" CLEAR FLOOR SPACE CONFIGURED FOR FORWARD OR PARALLEL APPROACH CENTERED ON EACH SINK, DISHWASHER. WORK SURFACE TO BE PROVIDED ADJACENT TO RANGE. DISHWASHER TO BE ADJACENT TO SINK CABINET
6. PROVIDE ADJUSTABLE SHELVES TO ALL CABINETS, TYP.
7. KITCHEN SOFFITS TO EXTEND TO WITHIN 1" OF UPPER CABINETS.
8. SEE SPECIFICATIONS AND APPLICABLE APPENDICES FOR MORE INFORMATION ON KITCHEN AND BATH FIXTURES, FINISHES AND APPLIANCES.
9. SEE ELECTRICAL DRAWINGS FOR OUTLET TYPES. OUTLETS AND THERMOSTAT LOCATED PER ELEVATIONS ON 6/A4.00 AND G0.35 SHEETS.
10. VERIFY ALL DIMENSIONS IN FIELD PRIOR TO CABINET FABRICATION.
11. EXPOSED SIDES OF CABINETS TO MATCH FINISH AT FACE OF DOOR PANELS. FILLER AND END PANELS TO MATCH FACE OF FINISH AT DOOR PANELS.
12. PROVIDE SCRIBE STRIPS WHERE CABINETS INTERFACE WITH WALLS, CEILINGS OR SOFFITS

FINISH PLAN GENERAL NOTES

1. REFER TO FINISH SCHEDULE ON A10.00 AND FINISH MATERIALS APPENDIX 9 IN SPECIFICATIONS FOR MORE INFORMATION.
2. PROVIDE STRAIGHT, FLUSH BASE AT CARPETED AREAS, MATERIALS AS SCHEDULED, U.O.N.
3. COORDINATE INSTALLATION OF BASE WITH MILLWORK. DO NOT INSTALL BASE WHERE BUILT-IN CABINETS ARE INDICATED.
4. ALL PAINT FINISH OF METAL PARTS SHALL BE SEMI-GLOSS, U.O.N.
5. CARPET CONTRACTOR TO PROVIDE & INSTALL SPECIFIED REDUCTION STRIP AT DOORS WHERE ALL CARPET & RESILIENT FLOORING MEET.
6. FLOAT ALL AREAS WHERE FLOOR IS NOT LEVEL OR TRUE PRIOR TO FLOORING INSTALLATIONS.
7. PROVIDE 1/8" BRUSHED STAINLESS STEEL SCHLUTER STRIP AT CARPET/STONE OR CARPET/CERAMIC TILE THRESHOLD.
8. ALL WALLS TO BE PAINTED PES U.O.N. PROVIDE LEVEL FINISH AT GYPSUM BOARD WALLS AND CEILINGS AREAS, AS IDENTIFIED PER SPECIFICATION SECTION 09 29 00.
9. ALL WALL BASE TO BE WB U.O.N.
10. SEE UNIT PLAN SHEETS FOR UNIT FINISHES AND EXTENT.

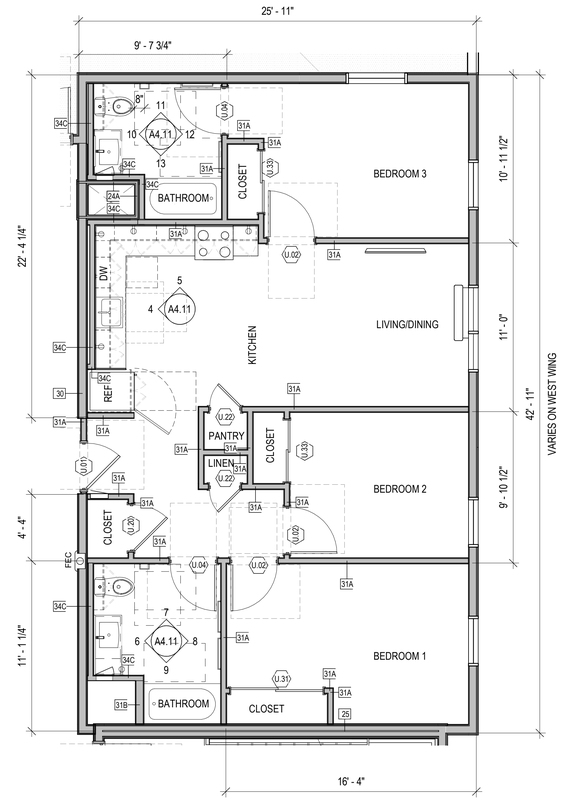

UNIT TYPE C2 - ADAPTABLE (CBC 11B) (1)
1/4" = 1'-0"

1036 GSF
14 UNITS

UNIT TYPE LEGEND

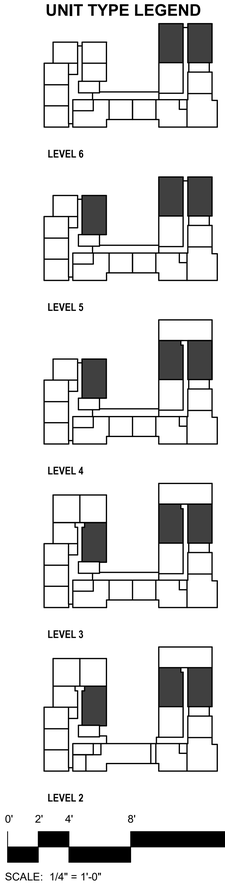

0' 2' 4' 8' 16'

SCALE: 1/4" = 1'-0"

PYATOK
1611 TELEGRAPH AVE.
SUITE 200
OAKLAND, CA 94612
T. 510.465.7010 | F. 510.465.8575
www.pyatok.com

THE UNITY COUNCIL
1900 FRUITVALE AVE
#2A
OAKLAND, CA 94601

2700 INTERNATIONAL
OAKLAND, CA 94601

STAMP:
LICENSED ARCHITECT
PETER WALLER
C-23554
4/30/2023
STATE OF CALIFORNIA

ISSUE SCHEDULE

100 SD	5/11/22
50 DD	7/15/22
100 DD	9/16/22
50 CD	11/18/22
PERMIT SET	12/09/22

REVISION SCHEDULE

NO.	ISSUE	DATE

JOB NUMBER:	1937
DRAWN BY:	MA, DV, TN, MO, SP
CHECKED BY:	Checker
ISSUE DATE:	12/09/22
SCALE:	As indicated

TITLE:
UNIT TYPE C2 - PLANS, ELEVATIONS, RCPS

SHEET:
A4.11

PRELIMINARY - Not for Construction -

© 2019 PYATOK ARCHITECTURE & URBAN DESIGN

12/8/2022 6:09:59 PM

FLOOR PLAN GENERAL NOTES

1. SEE SHEET G0.00 FOR SYMBOLS & ABBREVIATIONS
2. THESE PLANS SHOW UNIQUE INFORMATION ONLY. SEE ENLARGED PLANS FOR INFORMATION NOT SHOWN.
3. REFERENCE ACCESSIBILITY CODE SHEETS G0.31 - G0.37 FOR ALL ACCESSIBILITY STANDARDS, REQUIREMENTS AND DIAGRAMS
4. SEE CIVIL PLANS FOR THE BUILDING LOCATION ON SITE AND PRECISE GRADING PLANS.
5. FOR PARKING TABULATION REFER TO SHEET G0.00.
6. ALL DIMENSIONS ARE TO FACE OF MASONRY, CONCRETE, STUD, OR CENTERLINE OF COLUMN OR DEMISING WALL (C.L.). U.O.N. ALL "CLEAR" DIMENSIONS ARE TO FACE OF FINISH.
7. ALL CONSTRUCTION TO BE FIRE-RATED PER THE PROJECT DATA ON THE G0.00 SHEETS AND ASSEMBLIES, SHEETS A9.01. UNIT DEMISING WALLS ARE 1-HR RATED, TYPICAL. FOR DETAILED LOCATION OF WALL ASSEMBLY TYPES, SEE ENLARGED PLANS.
8. ALL STAIR, ELEVATOR, TRASH CHUTE, AND VENTILATION SHAFTS TO BE 2-HR FIRE RATED BARRIERS IF CONNECTING MORE THAN 3 STORIES. IF LESS THAN 3 STORIES, THESE MUST BE 1-HR FIRE-RATED CONSTRUCTION.
9. FOR DETAIL LOCATION OF WALL ASSEMBLY TYPES, SEE BUILDING AND UNIT FLOOR PLANS, SHEETS A2 SERIES, A4 SERIES, & A8 SERIES. FOR WALL, FLOOR, FLOOR/CEILING, AND ROOF/CEILING ASSEMBLY TYPES, SEE SHEETS A9.05.
10. WHERE PROVIDED, CMU PARTITION WALLS TO RECEIVE REINFORCING PER STRUCTURAL DRAWINGS AND TERMINATE AT STRUCTURE ABOVE, U.O.N.
11. ALL INTERIOR EXPOSED CONCRETE WITHIN PUBLIC SPACES IS ARCHITECTURAL FINISH, U.O.N.
12. STUD SIZES TYPICALLY USED THROUGHOUT PROJECT ARE SHOWN – REFER TO STUD SIZE ON WALL ASSEMBLIES, SHEET A9.01, FOR REQUIRED SIZES, GAUGES AND SPACING REQUIRED. COORDINATE BLOCKING AND BRACING REQUIREMENTS FOR ALL WALL-HUNT ITEMS AND VERIFY LOCATIONS PRIOR TO INSTALLATION OF FINISHES.
13. THIS BUILDING TO BE FIRE SPRINKLERED PER APPLICABLE SECTIONS OF CBC CHAPTER 9 AND NFPA 13.
14. CLASS 1 STANDPIPES TO BE INTERCONNECTED.
15. PROVIDE ALL NECESSARY WALL ACCESS PANELS AS REQUIRED FOR MECHANICAL, PLUMBING, FIRE SPRINKLER AND ELECTRICAL SYSTEMS. IN FIRE RATED ASSEMBLIES PROVIDE RATED ACCESS PANELS WITH SELF CLOSING DEVICES.
16. SEE INDIVIDUAL UNIT FLOOR PLANS OR ENLARGED BUILDING PLANS FOR DETAILED INFORMATION ON DIMENSIONS, CONSTRUCTION, DOORS, WINDOWS, AND OTHER ELEMENTS, TYPICAL.
17. INTERIOR FINISHES SHALL COMPLY WITH CBC 803.1 FLAME SPREAD PROVISION, SEE INTERIOR DRAWINGS.
18. FOR DOOR & WINDOW SCHEDULES SEE SHEET A9.10, A9.11 & A9.21.
19. RAMP SLOPES ARE MEASURED FROM CENTERLINE OF RAMP.
20. ALL EXIT STAIRS TO COMPLY WITH CBC CHAPTERS 10 AND 11B EXIT STAIRS AND LANDINGS TO BE 44 INCHES MINIMUM IN WIDTH, STAIR RISERS TO BE MAXIMUM 7 INCHES HIGH, AND TREADS TO BE 11 INCHES MINIMUM DEEP.
21. SEE ROOF PLAN GENERAL NOTES FOR DRAINAGE, VENTILATION, AND ROOF ACCESS NOTES.
22. ALL RESIDENTIAL UNITS THAT FACE ROADS ARE EQUIPPED WITH EITHER MECHANICAL VENTILATION OR PASSIVE FRESH-AIR INLETS, SEE MECHANICAL DRAWINGS FOR MORE INFORMATION.
23. SEE SIGNAGE PLANS AND DETAILS ON A10.30 FOR ADDITIONAL INFORMATION REGARDING SIGNS AT UNIT ENTRIES, ELEVATORS, STAIRS, EGRESS COMPONENTS, COMMON AREA DOORS.

KEYNOTE LEGEND	
#	KEYNOTE
03 6302	CONCRETE BREEZE BLOCK, NOT PAINTED 03
10-55A	MAILBOXES
10-56	COGAN DOUBLE TIERED WIRE MESH STORAGE LOCKERS (8) 4'x4'x5'
12 93A	DERO DECKER BIKE PARKING WITH LIFT ASSIST
12 93B	DERO FIX IT BICYCLE STATION
12 93C	WASTE RECEPTACLE IN MAILBOX CABINET

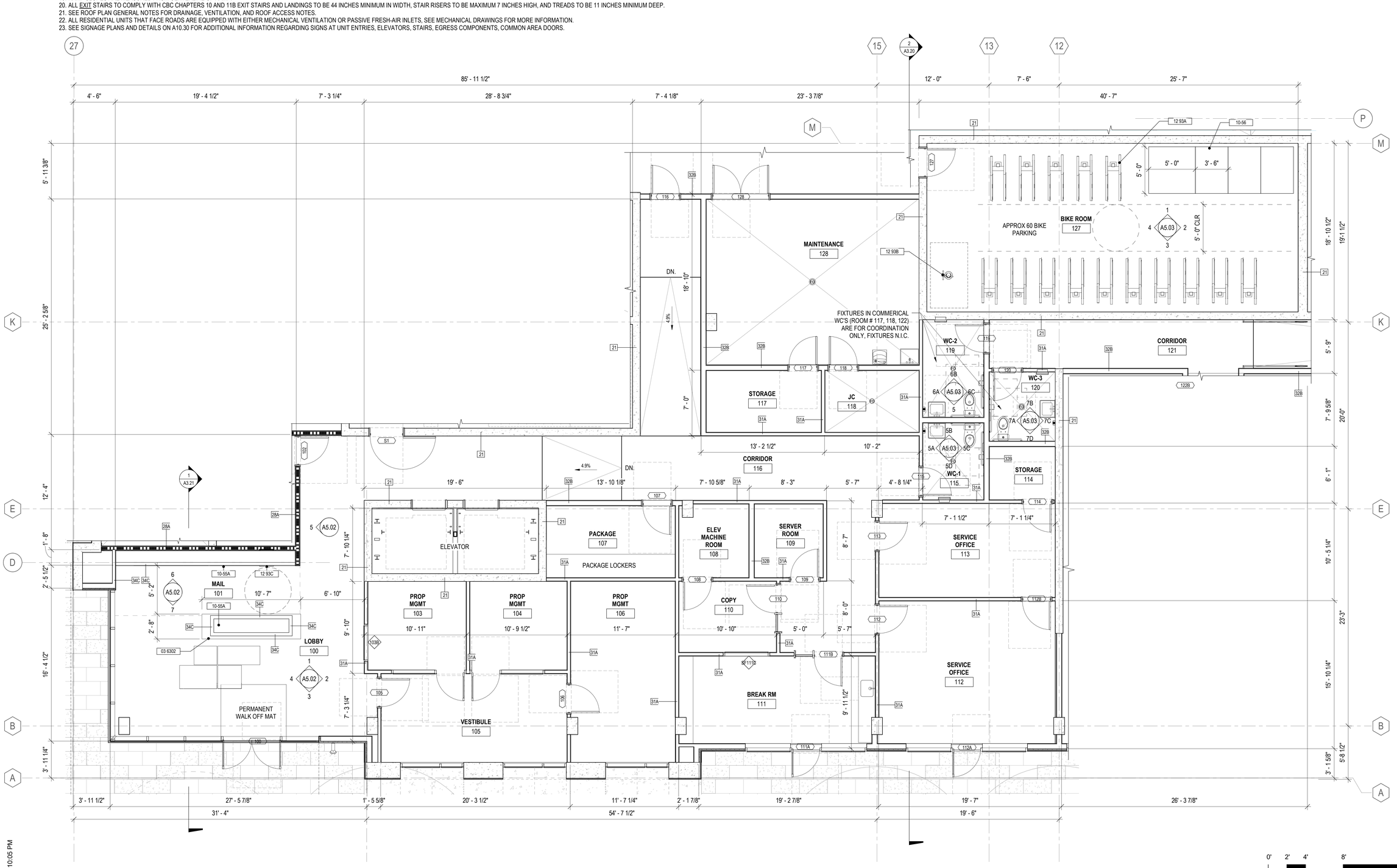

LEVEL 1 - ENLARGED PLANS - COMMON AREAS (1)
1/4" = 1'-0"

0' 2' 4' 8' 16'
SCALE: 1/4" = 1'-0"

12/8/2022 6:10:05 PM

PYATOK
1611 TELEGRAPH AVE.
SUITE 200
OAKLAND, CA 94612
T. 510.465.7010 | F. 510.465.8575
www.pyatok.com

THE UNITY COUNCIL
1900 FRUITVALE AVE
#2A
OAKLAND, CA 94601

2700 INTERNATIONAL
OAKLAND, CA 94601

STAMP:
LICENSED ARCHITECT
PETER WALLER
C-23554
4/30/2023
STATE OF CALIFORNIA

ISSUE SCHEDULE

100 SD	5/11/22
50 DD	7/15/22
100 DD	9/16/22
50 CD	11/18/22
PERMIT SET	12/09/22

REVISION SCHEDULE

NO.	ISSUE	DATE

JOB NUMBER:	1937
DRAWN BY:	MA, DV, TN, MO, SP
CHECKED BY:	Checker
ISSUE DATE:	12/09/22
SCALE:	As indicated

TITLE:
ENLARGED PLANS - COMMON AREAS LEVEL 1

SHEET:
A5.00

PRELIMINARY - Not for Construction -

© 2019 PYATOK ARCHITECTURE & URBAN DESIGN

REFLECTED CEILING PLAN GENERAL NOTES

1. THESE PLANS ARE FOR COORDINATION OF LIGHT FIXTURES, SPRINKLERS, HVAC REGISTERS, SOFFITS AND OTHER CEILING DESIGN FEATURES. REFER TO MECHANICAL, ELECTRICAL, SPRINKLER, STRUCTURAL AND INTERIOR DRAWINGS FOR ADDITIONAL INFORMATION.
2. FOR ALL UNIT RCP PLANS SEE UNIT RCP SHEETS.
3. FOR UNIT LIGHTING, SEE UNIT RCP SHEETS AND ELECTRICAL DRAWINGS
4. FIRE-RATED CEILINGS ARE ALWAYS CONTINUOUS ABOVE DROPPED CEILINGS WITH FASTENING AND JOINT TAPE AS REQUIRED FOR SPECIFIED RATING.
5. FIXTURES SHALL BE CENTERED IN THE CEILING SPACE AND/OR ROOM, U.O.N.
6. ALL WALL-MOUNTED FIXTURES TO BE MAX. 4" PROJECTION FROM THE FINISH FACE OF THE WALL OR 6'-8" MINIMUM TO THE UNDERSIDE OF THE FIXTURE.
7. ALL DIMENSIONS ARE TO CENTER OF LIGHT FIXTURES, U.O.N.
8. CENTER SPRINKLER HEAD LOCATIONS BETWEEN LIGHTING FIXTURES AND/OR SMOKE DETECTORS, TYPICAL. LOCATION AND SPACING TO BE DETERMINED WITH APPROVED SHOP DRAWINGS.
9. SMOKE DETECTORS SHALL BE LOCATED A MINIMUM OF 3'-0" FROM SUPPLY AIR DIFFUSERS AND NO LESS THAN 4" FROM ANY WALL IF CEILING MOUNTED, 6" FROM CEILILING IF WALL MOUNTED
10. CEILING ACCESS PANELS REQUIRED AT ALL DAMPERS, VALVES AND TELECOM ACCESS POINTS. COORDINATE LOCATIONS PRIOR TO INSTALLATION OF ANY OF THESE SYSTEMS.
11. PROVIDE SOFFIT VENTILATION FOR ALL ENCLOSED AREAS AS REQUIRED FOR ADEQUATE AIR FLOW IN CAVITIES. SEE SOFFIT DETAILS FOR MORE INFORMATION.
12. WHERE SUSPENDED CEILINGS PROVIDED:
13. CHANGES IN CEILING ELEVATION SHALL BE PROVIDED WITH POSITIVE BRACING.
14. CABLE TRAYS AND ELECTRICAL CONDUITS SHALL BE SUPPORTED INDEPENDENTLY OF CEILING.
15. PROVIDE 2" OVERSIZE RING, SLEEVE OR ADAPTOR AT FIRE SPRINKLER HEADS AND OTHER PENETRATIONS.
16. SHOP DRAWINGS SHALL IDENTIFY LOCATIONS WHERE CEILING IS FIXED OR FREE TO MOVE AT CLOSURE ANGLES. ANGLES TO BE A MINIMUM OF 2" WIDE; OPEN SIDE TO BE 0.75" CLEAR OF WALL.

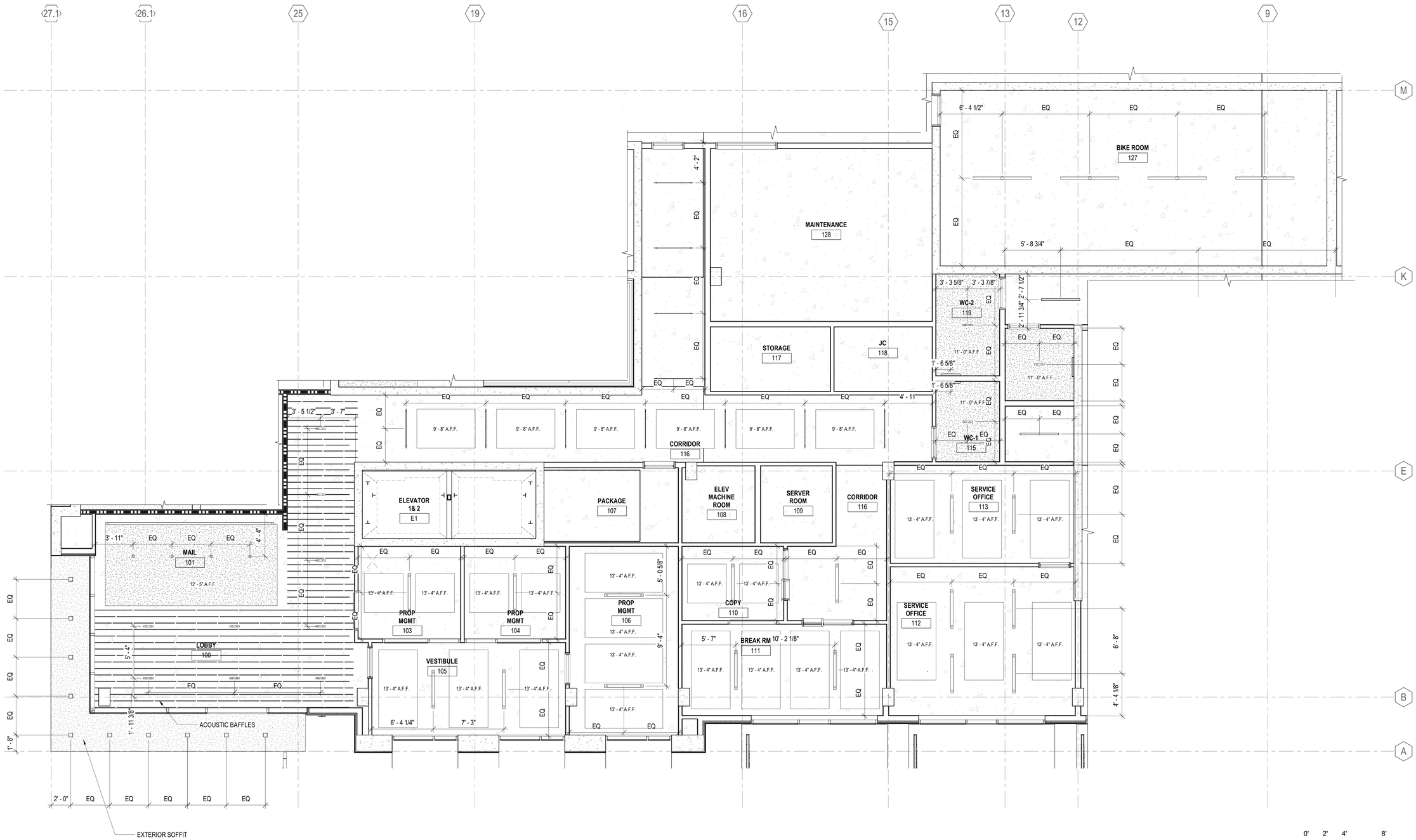

ENLARGED RCP - COMMON AREAS LEVEL 1 (1)
1/4" = 1'-0"

0' 2' 4' 8' 16'
SCALE: 1/4" = 1'-0"

12/8/2022 6:10:10 PM

PYATOK
1611 TELEGRAPH AVE.
SUITE 200
OAKLAND, CA 94612
T. 510.465.7010 | F. 510.465.8575
www.pyatok.com

THE UNITY COUNCIL
1900 FRUITVALE AVE
#2A
OAKLAND, CA 94601

2700 INTERNATIONAL
OAKLAND, CA 94601

STAMP:
LICENSED ARCHITECT
PETER WALLER
C-33551
4/30/2023
STATE OF CALIFORNIA

ISSUE SCHEDULE

100 SD	5/11/22
50 DD	7/15/22
100 DD	9/16/22
50 CD	11/18/22
PERMIT SET	12/09/22

REVISION SCHEDULE

NO.	ISSUE	DATE

JOB NUMBER:	1937
DRAWN BY:	MA, DV, TN, MO, SP
CHECKED BY:	Checker
ISSUE DATE:	12/09/22
SCALE:	As indicated

TITLE:
ENLARGED RCP - COMMON AREAS LEVEL 1

SHEET:
A5.01

PRELIMINARY - Not for Construction -

© 2019 PYATOK ARCHITECTURE & URBAN DESIGN

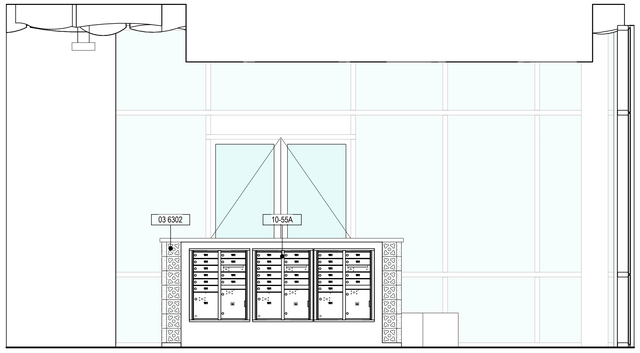

LOBBY - MAILROOM ELEVATION B 7
3/8" = 1'-0"

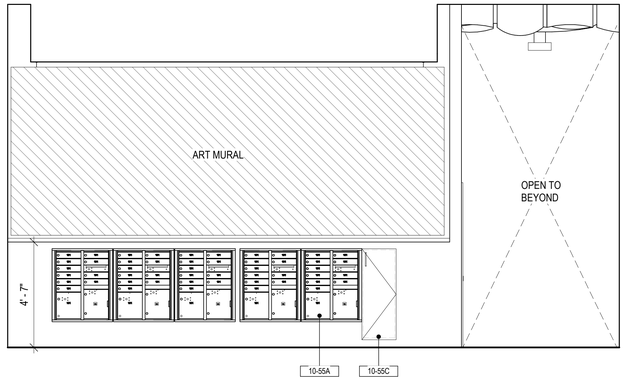

LOBBY - MAILROOM ELEVATION A 6
3/8" = 1'-0"

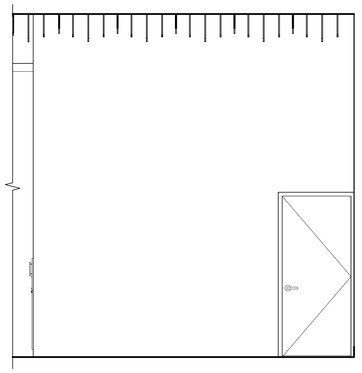

LOBBY - INTERIOR ELEVATION E 5
3/8" = 1'-0"

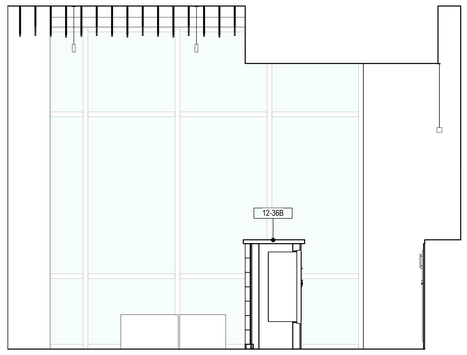

LOBBY - INTERIOR ELEVATION D 4
3/8" = 1'-0"

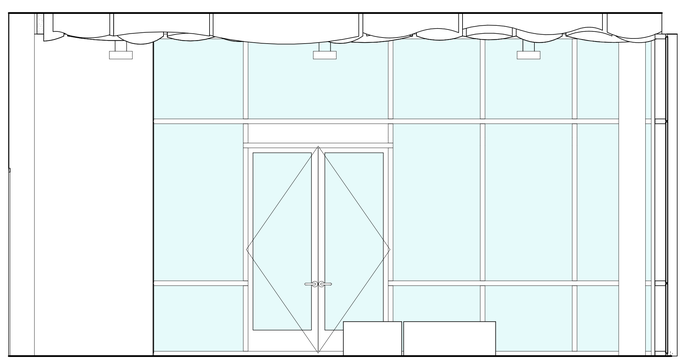

LOBBY - INTERIOR ELEVATION C 3
3/8" = 1'-0"

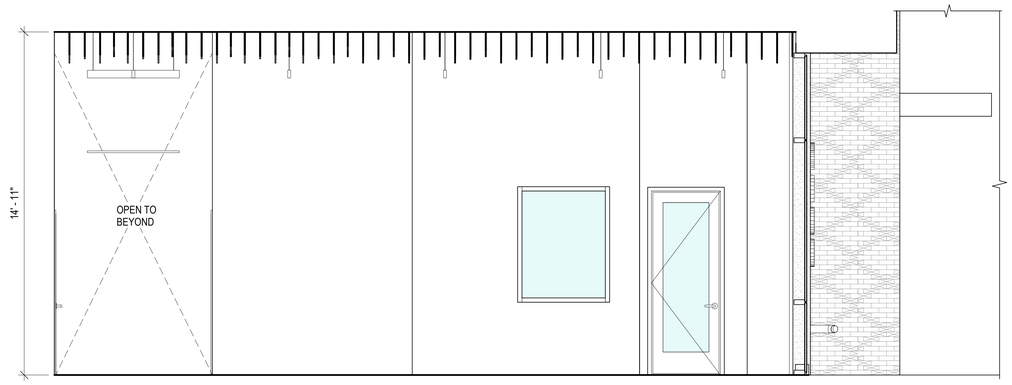

LOBBY - INTERIOR ELEVATION B 2
3/8" = 1'-0"

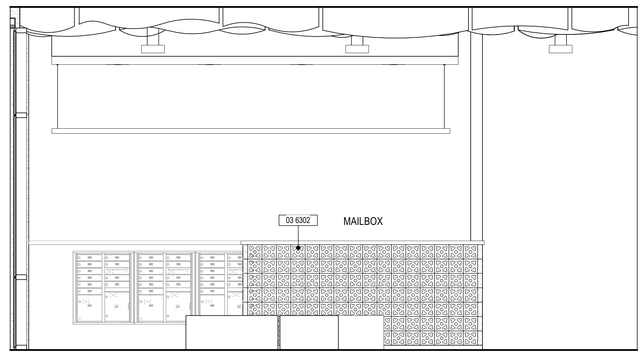

LOBBY - INTERIOR ELEVATION A 1
3/8" = 1'-0"

INTERIOR ELEVATION NOTES

1. PROVIDE BLOCKING FOR ALL WALL-HUNG UNITS, ADJUSTABLE HEIGHT CABINETRY, MILLWORK, GRAB BARS AND ACCESSORIES.
2. SEE UNIT PLANS AND REFLECTED CEILING PLANS FOR EXTENT AND LOCATION OF GYPSUM BOARD SOFFITS.
3. PROVIDE WATERLINE TO REFRIGERATOR LOCATIONS FOR ICE MAKER WHERE SHOWN (SEE PLUMBING DRAWINGS).
4. @ ADAPTABLE UNITS, PROVIDE 30" x 48" CLEAR FLOOR SPACE CONFIGURED FOR FORWARD OR PARALLEL APPROACH CENTERED ON EACH SINK, DISHWASHER, REFRIGERATOR, AND WORKSURFACE. PROVIDE PARALLEL APPROACH AT RANGE.
5. @ ACCESSIBLE UNITS PROVIDE 30" x 48" CLEAR FLOOR SPACE CONFIGURED FOR PARALLEL APPROACH AT REFRIGERATOR, 30" x 48" CLEAR FLOOR SPACE CONFIGURED FOR FORWARD OR PARALLEL APPROACH CENTERED ON EACH SINK, DISHWASHER. WORK SURFACE TO BE PROVIDED ADJACENT TO RANGE. DISHWASHER TO BE ADJACENT TO SINK CABINET
6. PROVIDE ADJUSTABLE SHELVES TO ALL CABINETS, TYP.
7. KITCHEN SOFFITS TO EXTEND TO WITHIN 1" OF UPPER CABINETS.
8. SEE SPECIFICATIONS AND APPLICABLE APPENDICES FOR MORE INFORMATION ON KITCHEN AND BATH FIXTURES, FINISHES AND APPLIANCES.
9. SEE ELECTRICAL DRAWINGS FOR OUTLET TYPES. OUTLETS AND THERMOSTAT LOCATED PER ELEVATIONS ON 6/A4.00 AND G0.35 SHEETS.
10. VERIFY ALL DIMENSIONS IN FIELD PRIOR TO CABINET FABRICATION.
11. EXPOSED SIDES OF CABINETS TO MATCH FINISH AT FACE OF DOOR PANELS. FILLER AND END PANELS TO MATCH FACE OF FINISH AT DOOR PANELS.
12. PROVIDE SCRIBE STRIPS WHERE CABINETS INTERFACE WITH WALLS, CEILINGS OR SOFFITS

KEYNOTE LEGEND

#	KEYNOTE
03 6302	CONCRETE BREEZE BLOCK, NOT PAINTED 03
10-55A	MAILBOXES
10-55C	WASTE RECEPTACLE IN MAILBOX CABINET
12-36B	COUNTERTOP, SEE FINISH SCHEDULE

PYATOK
1611 TELEGRAPH AVE.
SUITE 200
OAKLAND, CA 94612
T. 510.465.7010 | F. 510.465.8575
www.pyatok.com

THE UNITY COUNCIL
1900 FRUITVALE AVE
#2A
OAKLAND, CA 94601

2700 INTERNATIONAL
OAKLAND, CA 94601

STAMP:

LICENSED ARCHITECT
PETER WALLER
C-23551
RENEWAL DATE
4/30/2023
STATE OF CALIFORNIA

ISSUE SCHEDULE

100 SD	5/11/22
50 DD	7/15/22
100 DD	9/16/22
50 CD	11/18/22
PERMIT SET	12/09/22

REVISION SCHEDULE

NO.	ISSUE	DATE

JOB NUMBER:	1937
DRAWN BY:	MA, DV, TN, MO, SP
CHECKED BY:	Checker
ISSUE DATE:	12/09/22
SCALE:	As indicated

TITLE:
INTERIOR ELEVATIONS - COMMON AREAS LEVEL 1

SHEET:
A5.02

PRELIMINARY - Not for Construction -

© 2019 PYATOK ARCHITECTURE & URBAN DESIGN

12/8/2022 6:10:16 PM

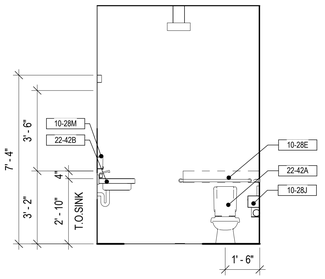

7D

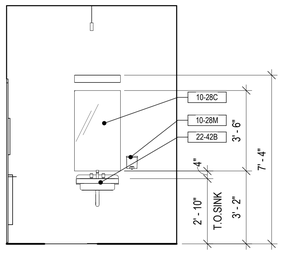

BATHROOM 3 LEVEL 1 - 7C
3/8" = 1'-0"
7C

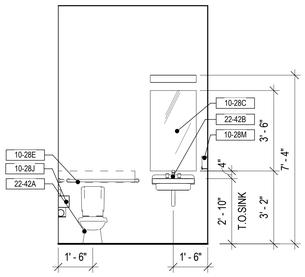

6D

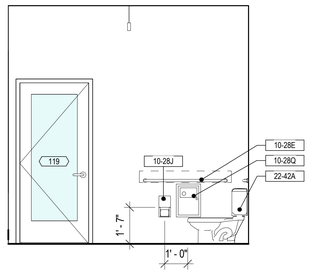

6C

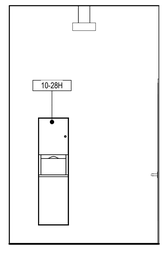

6B

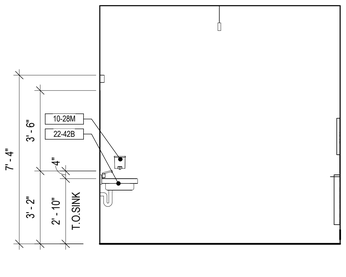

BATHROOM 2 LEVEL 1 - 6A
3/8" = 1'-0"
6A

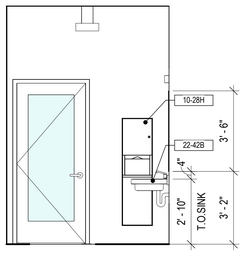

7B

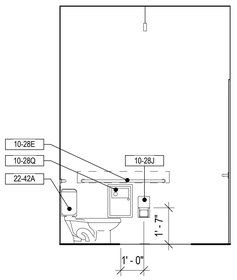

BATHROOM 3 LEVEL 1 - 7A
3/8" = 1'-0"
7A

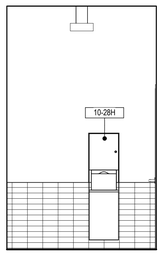

5D

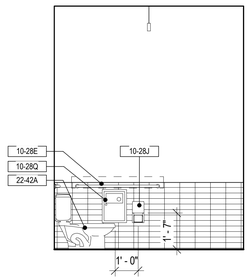

5C

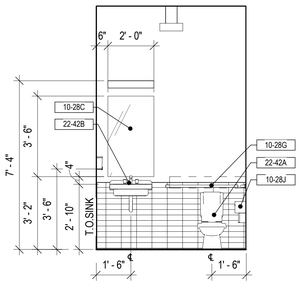

5B

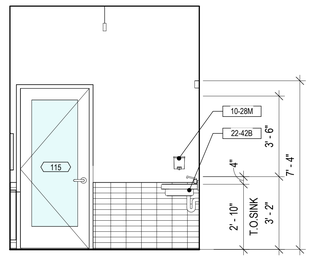

BATHROOM 1 LEVEL 1 - 5A
3/8" = 1'-0"
5A

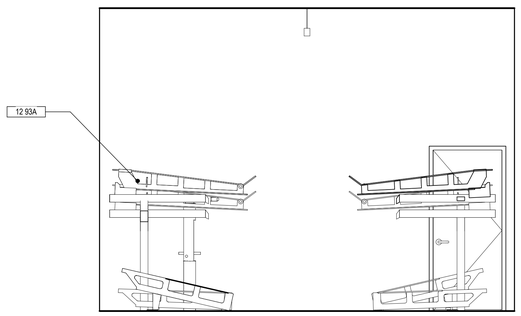

BIKE ROOM - INTERIOR ELEVATION D
3/8" = 1'-0"
4

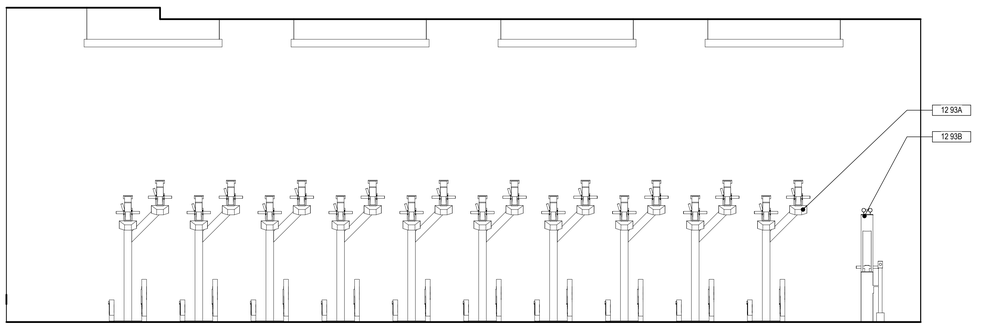

BIKE ROOM - INTERIOR ELEVATION C
3/8" = 1'-0"
3

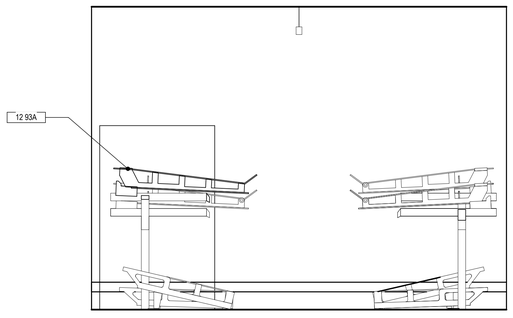

BIKE ROOM - INTERIOR ELEVATION B
3/8" = 1'-0"
2

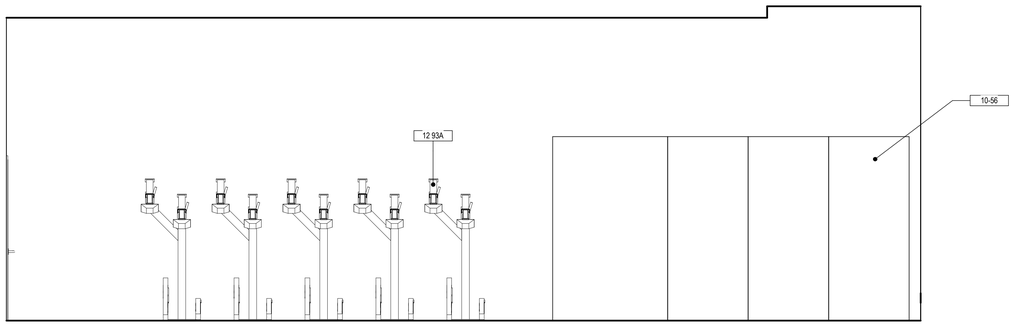

BIKE ROOM - INTERIOR ELEVATION A
3/8" = 1'-0"
1

INTERIOR ELEVATION NOTES

1. PROVIDE BLOCKING FOR ALL WALL-HUNG UNITS, ADJUSTABLE HEIGHT CABINETRY, MILLWORK, GRAB BARS AND ACCESSORIES.
2. SEE UNIT PLANS AND REFLECTED CEILING PLANS FOR EXTENT AND LOCATION OF GYPSUM BOARD SOFFITS.
3. PROVIDE WATERLINE TO REFRIGERATOR LOCATIONS FOR ICE MAKER WHERE SHOWN (SEE PLUMBING DRAWINGS).
4. @ ADAPTABLE UNITS, PROVIDE 30" x 48" CLEAR FLOOR SPACE CONFIGURED FOR FORWARD OR PARALLEL APPROACH CENTERED ON EACH SINK, DISHWASHER, REFRIGERATOR, AND WORKSURFACE. PROVIDE PARALLEL APPROACH AT RANGE.
5. @ ACCESSIBLE UNITS PROVIDE 30" x 48" CLEAR FLOOR SPACE CONFIGURED FOR PARALLEL APPROACH AT REFRIGERATOR, 30" x 48" CLEAR FLOOR SPACE CONFIGURED FOR FORWARD OR PARALLEL APPROACH CENTERED ON EACH SINK, DISHWASHER. WORK SURFACE TO BE PROVIDED ADJACENT TO RANGE. DISHWASHER TO BE ADJACENT TO SINK CABINET
6. PROVIDE ADJUSTABLE SHELVES TO ALL CABINETS, TYP.
7. KITCHEN SOFFITS TO EXTEND TO WITHIN 1" OF UPPER CABINETS.
8. SEE SPECIFICATIONS AND APPLICABLE APPENDICES FOR MORE INFORMATION ON KITCHEN AND BATH FIXTURES, FINISHES AND APPLIANCES.
9. SEE ELECTRICAL DRAWINGS FOR OUTLET TYPES. OUTLETS AND THERMOSTAT LOCATED PER ELEVATIONS ON 6/A4.00 AND G0.35 SHEETS.
10. VERIFY ALL DIMENSIONS IN FIELD PRIOR TO CABINET FABRICATION.
11. EXPOSED SIDES OF CABINETS TO MATCH FINISH AT FACE OF DOOR PANELS. FILLER AND END PANELS TO MATCH FACE OF FINISH AT DOOR PANELS.
12. PROVIDE SCRIBE STRIPS WHERE CABINETS INTERFACE WITH WALLS, CEILINGS OR SOFFITS

KEYNOTE LEGEND	
#	KEYNOTE
10-28C	MIRROR
10-28E	TOILET GRAB BAR
10-28G	GRAB BARS - PROVIDE BLOCKING. SEE TS0.31 FOR MORE INFORMATION
10-28H	SEMI-RECESSED PAPER TOWEL DISPENSER AND RECEPTACLE
10-28J	TOILET PAPER DISPENSER, LOCATED PER CBC 11B-604.9.6
10-28M	SOAP DISPENSER
10-28Q	SURFACE MOUNTED TOILET SANITARY DISPOSAL
10-56	COGAN DOUBLE TIERED WIRE MESH STORAGE LOCKERS (8) 4'x4'x5'
12 93A	DERO DECKER BIKE PARKING WITH LIFT ASSIST
12 93B	DERO FIX IT BICYCLE STATION
22-42A	TOILET, 17" MIN. 19" MAX. SEAT HEIGHT, S.P.D.
22-42B	LAVATORY SINK, S.P.D.

PYATOK
1611 TELEGRAPH AVE.
SUITE 200
OAKLAND, CA 94612
T. 510.465.7010 | F. 510.465.8575
www.pyatok.com

THE UNITY COUNCIL
1900 FRUITVALE AVE
#2A
OAKLAND, CA 94601

2700 INTERNATIONAL
OAKLAND, CA 94601

STAMP:
LICENSED ARCHITECT
PETER WALLER
C-23551
4/30/2023
STATE OF CALIFORNIA

ISSUE SCHEDULE

100 SD	5/11/22
50 DD	7/15/22
100 DD	9/16/22
50 CD	11/18/22
PERMIT SET	12/09/22

REVISION SCHEDULE

NO.	ISSUE	DATE

JOB NUMBER:	1937
DRAWN BY:	Author
CHECKED BY:	Checker
ISSUE DATE:	12/09/22
SCALE:	As indicated

TITLE:
INTERIOR ELEVATIONS - COMMON AREAS LEVEL 1

SHEET:
A5.03

PRELIMINARY - Not for Construction -

© 2019 PYATOK ARCHITECTURE & URBAN DESIGN

12/8/2022 6:10:24 PM

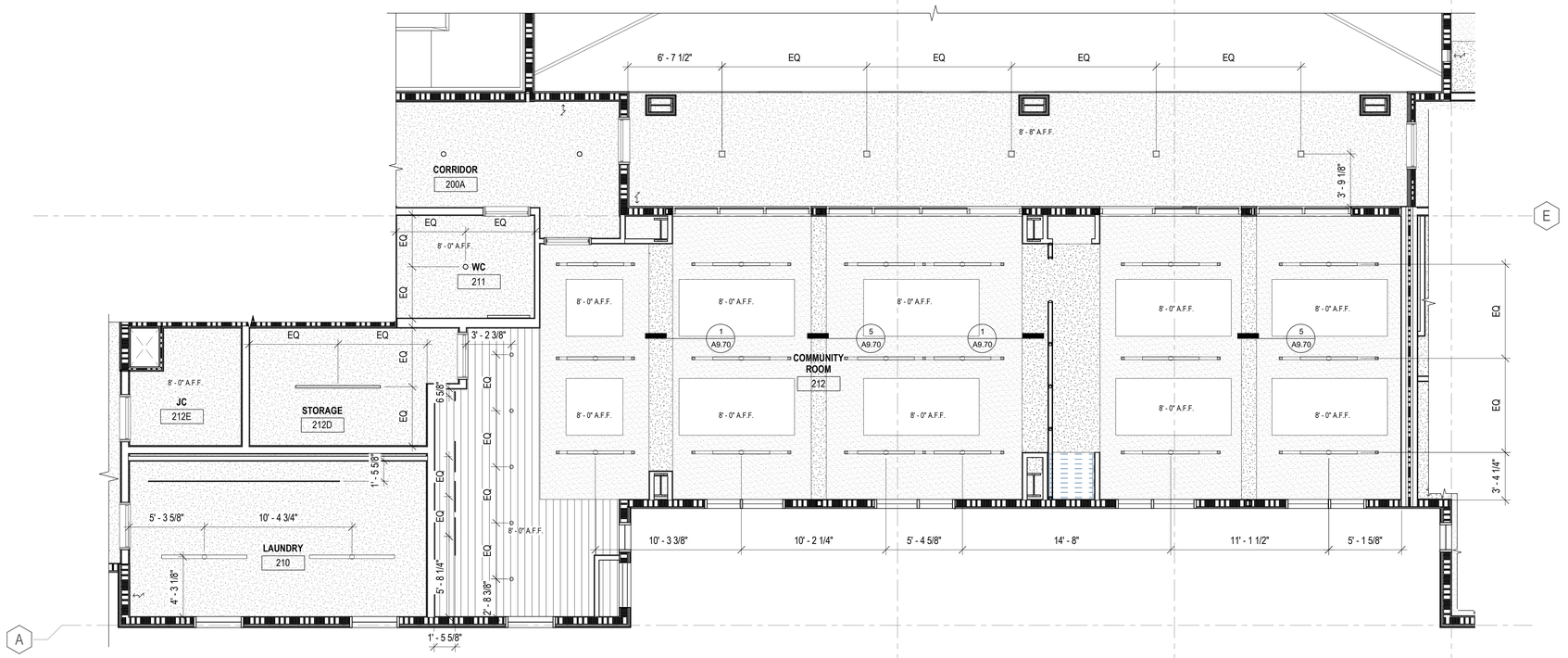

ENLARGED RCP - COMMON AREAS - LEVEL 2 (2)
1/4" = 1'-0"

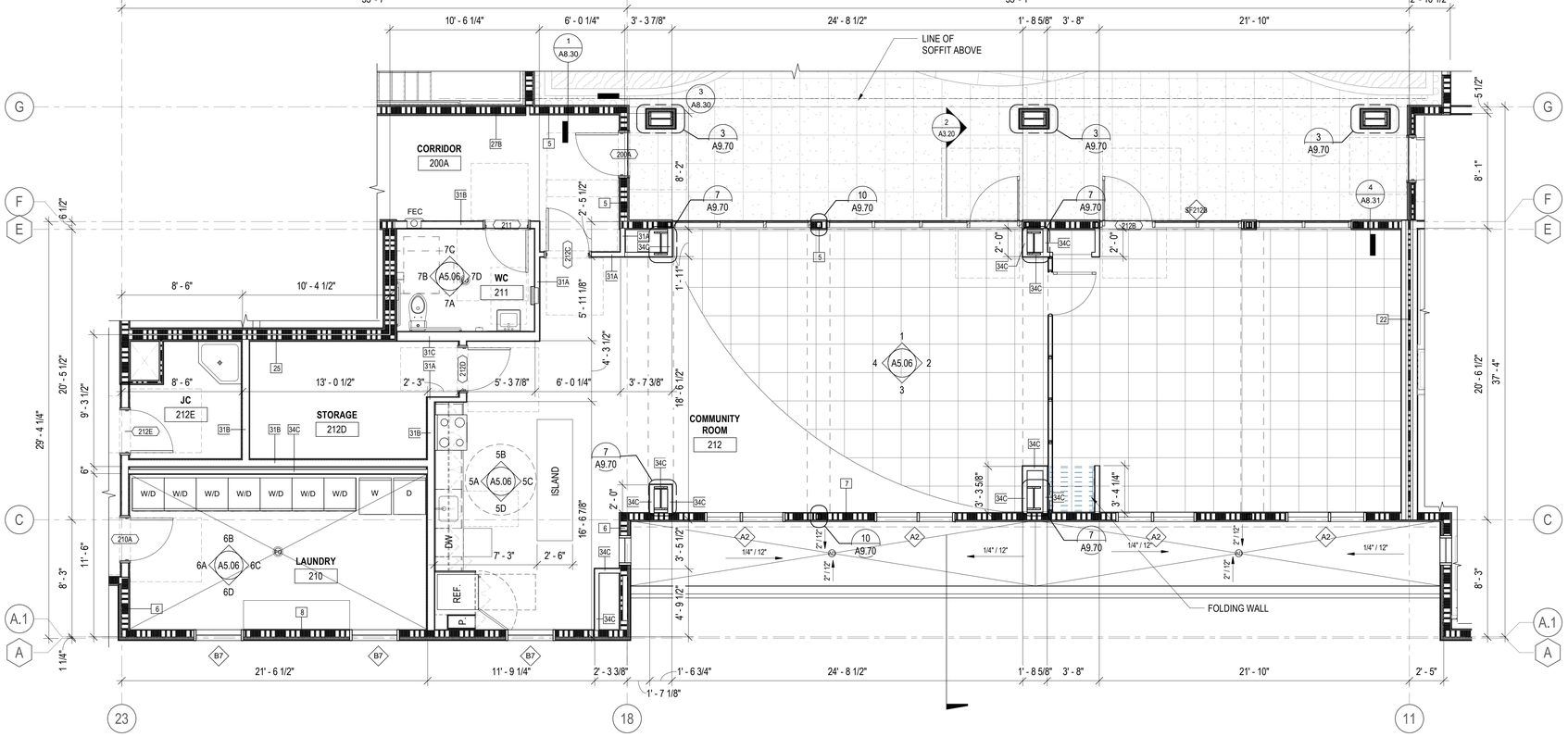

ENLARGED COMMON AREAS - LEVEL 2 (1)
1/4" = 1'-0"

FLOOR PLAN GENERAL NOTES

1. SEE SHEET G0.00 FOR SYMBOLS & ABBREVIATIONS
2. THESE PLANS SHOW UNIQUE INFORMATION ONLY. SEE ENLARGED PLANS FOR INFORMATION NOT SHOWN.
3. REFERENCE ACCESSIBILITY CODE SHEETS G0.31 - G0.37 FOR ALL ACCESSIBILITY STANDARDS, REQUIREMENTS AND DIAGRAMS
4. SEE CIVIL PLANS FOR THE BUILDING LOCATION ON SITE AND PRECISE GRADING PLANS.
5. FOR PARKING TABULATION REFER TO SHEET G0.00.
6. ALL DIMENSIONS ARE TO FACE OF MASONRY, CONCRETE, STUD, OR CENTERLINE OF COLUMN OR DEMISING WALL (C.L.). U.O.N. ALL "CLEAR" DIMENSIONS ARE TO FACE OF FINISH.
7. ALL CONSTRUCTION TO BE FIRE-RATED PER THE PROJECT DATA ON THE G0.00 SHEETS AND ASSEMBLIES, SHEETS A9.01. UNIT DEMISING WALLS ARE 1-HR RATED, TYPICAL. FOR DETAILED LOCATION OF WALL ASSEMBLY TYPES, SEE ENLARGED PLANS.
8. ALL STAIR, ELEVATOR, TRASH CHUTE, AND VENTILATION SHAFTS TO BE 2-HR FIRE RATED BARRIERS IF CONNECTING MORE THAN 3 STORIES. IF LESS THAN 3 STORIES, THESE MUST BE 1-HR FIRE-RATED CONSTRUCTION.
9. FOR DETAIL LOCATION OF WALL ASSEMBLY TYPES, SEE BUILDING AND UNIT FLOOR PLANS, SHEETS A2 SERIES, A4 SERIES, & A8 SERIES, FOR WALL, FLOOR, FLOOR/CEILING, AND ROOF/CEILING ASSEMBLY TYPES, SEE SHEETS A9.05.
10. WHERE PROVIDED, CMU PARTITION WALLS TO RECEIVE REINFORCING PER STRUCTURAL DRAWINGS AND TERMINATE AT STRUCTURE ABOVE, U.O.N.
11. ALL INTERIOR EXPOSED CONCRETE WITHIN PUBLIC SPACES IS ARCHITECTURAL FINISH, U.O.N.
12. STUD SIZES TYPICALLY USED THROUGHOUT PROJECT ARE SHOWN – REFER TO STUD SIZE ON WALL ASSEMBLIES, SHEET A9.01, FOR REQUIRED SIZES, GAUGES AND SPACING REQUIRED. COORDINATE BLOCKING AND BRACING REQURIEMENTS FOR ALL WALL-HUNT ITEMS AND VERIFY LOCATIONS PRIOR TO INSTALLATION OF FINISHES.
13. THIS BUILDING TO BE FIRE SPRINKLERED PER APPLICABLE SECTIONS OF CBC CHAPTER 9 AND NFPA 13.
14. CLASS 1 STANDPIPES TO BE INTERCONNECTED.
15. PROVIDE ALL NECESSARY WALL ACCESS PANELS AS REQUIRED FOR MECHANICAL, PLUMBING, FIRE SPRINKLER AND ELECTRICAL SYSTEMS. IN FIRE RATED ASSEMBLIES PROVIDE RATED ACCESS PANELS WITH SELF CLOSING DEVICES.
16. SEE INDIVIDUAL UNIT FLOOR PLANS OR ENLARGED BUILDING PLANS FOR DETAILED INFORMATION ON DIMENSIONS, CONSTRUCTION, DOORS, WINDOWS, AND OTHER ELEMENTS, TYPICAL.
17. INTERIOR FINISHES SHALL COMPLY WITH CBC 803.1 FLAME SPREAD PROVISION, SEE INTERIOR DRAWINGS.
18. FOR DOOR & WINDOW SCHEDULES SEE SHEET A9.10, A9.11 & A9.20.
19. RAMP SLOPES ARE MEASURED FROM CENTERLINE OF RAMP.
20. ALL EXIT STAIRS TO COMPLY WITH CBC CHAPTERS 10 AND 11B. EXIT STAIRS AND LANDINGS TO BE 44 INCHES MINIMUM IN WIDTH, STAIR RISERS TO BE MAXIMUM 7 INCHES HIGH, AND TREADS TO BE 11 INCHES MINIMUM DEEP.
21. SEE ROOF PLAN GENERAL NOTES FOR DRAINAGE, VENTILATION, AND ROOF ACCESS NOTES.
22. ALL RESIDENTIAL UNITS THAT FACE ROADS ARE EQUIPPED WITH EITHER MECHANICAL VENTILATION OR PASSIVE FRESH-AIR INLETS, SEE MECHANICAL DRAWINGS FOR MORE INFORMATION.
23. SEE SIGNAGE PLANS AND DETAILS ON A10.30 FOR ADDITIONAL INFORMATION REGARDING SIGNS AT UNIT ENTRIES, ELEVATORS, STAIRS, EGRESS COMPONENTS, COMMON AREA DOORS.

REFLECTED CEILING PLAN GENERAL NOTES

1. THESE PLANS ARE FOR COORDINATION OF LIGHT FIXTURES, SPRINKLERS, HVAC REGISTERS, SOFFITS AND OTHER CEILING DESIGN FEATURES. REFER TO MECHANICAL, ELECTRICAL, SPRINKLER, STRUCTURAL AND INTERIOR DRAWINGS FOR ADDITIONAL INFORMATION.
2. FOR ALL UNIT RCP PLANS SEE UNIT RCP SHEETS.
3. FOR UNIT LIGHTING, SEE UNIT RCP SHEETS AND ELECTRICAL DRAWINGS
4. FIRE-RATED CEILINGS ARE ALWAYS CONTINUOUS ABOVE DROPPED CEILINGS WITH FASTENING AND JOINT TAPE AS REQUIRED FOR SPECIFIED RATING.
5. FIXTURES SHALL BE CENTERED IN THE CEILING SPACE AND/OR ROOM, U.O.N.
6. ALL WALL-MOUNTED FIXTURES TO BE MAX. 4" PROJECTION FROM THE FINISH FACE OF THE WALL OR 6'-8" MINIMUM TO THE UNDERSIDE OF THE FIXTURE.
7. ALL DIMENSIONS ARE TO CENTER OF LIGHT FIXTURES, U.O.N.
8. CENTER SPRINKLER HEAD LOCATIONS BETWEEN LIGHTING FIXTURES AND/OR SMOKE DETECTORS, TYPICAL. LOCATION AND SPACING TO BE DETERMINED WITH APPROVED SHOP DRAWINGS.
9. SMOKE DETECTORS SHALL BE LOCATED A MINIMUM OF 3'-0" FROM SUPPLY AIR DIFFUSERS AND NO LESS THAN 4" FROM ANY WALL IF CEILING MOUNTED, 6" FROM CEILILING IF WALL MOUNTED
10. CEILING ACCESS PANELS REQUIRED AT ALL DAMPERS, VALVES AND TELECOM ACCESS POINTS. COORDINATE LOCATIONS PRIOR TO INSTALLATION OF ANY OF THESE SYSTEMS.
11. PROVIDE SOFFIT VENTILATION FOR ALL ENCLOSED AREAS AS REQUIRED FOR ADEQUATE AIR FLOW IN CAVITIES. SEE SOFFIT DETAILS FOR MORE INFORMATION.
12. WHERE SUSPENDED CEILINGS PROVIDED:
13. CHANGES IN CEILING ELEVATION SHALL BE PROVIDED WITH POSITIVE BRACING.
14. CABLE TRAYS AND ELECTRICAL CONDUITS SHALL BE SUPPORTED INDEPENDENTLY OF CEILING.
15. PROVIDE 2" OVERSIZE RING, SLEEVE OR ADAPTOR AT FIRE SPRINKLER HEADS AND OTHER PENETRATIONS.
16. SHOP DRAWINGS SHALL IDENTIFY LOCATIONS WHERE CEILING IS FIXED OR FREE TO MOVE AT CLOSURE ANGLES. ANGLES TO BE A MINIMUM OF 2" WIDE; OPEN SIDE TO BE 0.75" CLEAR OF WALL.

RCP LEGEND

- FINISHED CEILING ELEVATION ABOVE FINISHED FLOOR
- DROPPED GYP. BD. CEILING ON MTL. FRAMING
- EXPOSED UNDERSIDE OF CONCRETE SLAB
- DROPPED ACOUSTICAL CLOUD
- SHAFT OPENING, S.M.D.

XX'-XX" A.F.F. CEILING HEIGHT ABOVE FINISH FLOOR

0' 2' 4' 8' 16'

SCALE: 1/4" = 1'-0"

PYATOK
1611 TELEGRAPH AVE.
SUITE 200
OAKLAND, CA 94612
T. 510.465.7010 | F. 510.465.8575
www.pyatok.com

THE UNITY COUNCIL
1900 FRUITVALE AVE
#2A
OAKLAND, CA 94601

2700 INTERNATIONAL

OAKLAND, CA 94601

STAMP:

LICENSED ARCHITECT PETER WALLER C-23554 REGISTERED 4/30/2023 STATE OF CALIFORNIA

ISSUE SCHEDULE

100 SD	5/11/22
50 DD	7/15/22
100 DD	9/16/22
50 CD	11/18/22
PERMIT SET	12/09/22

REVISION SCHEDULE

NO.	ISSUE	DATE

JOB NUMBER:	1937
DRAWN BY:	MA, DV, TN, MO, SP
CHECKED BY:	Checker
ISSUE DATE:	12/09/22
SCALE:	As indicated

TITLE:

ENLARGED PLANS & RCP - COMMON AREAS LEVEL 2

SHEET:

A5.05

PRELIMINARY - Not for Construction -

© 2019 PYATOK ARCHITECTURE & URBAN DESIGN

12/8/2022 6:10:29 PM

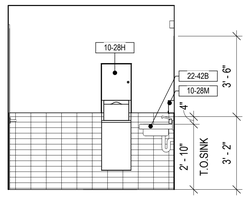

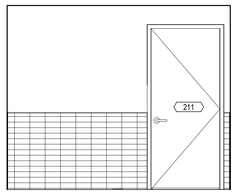

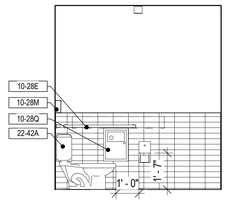

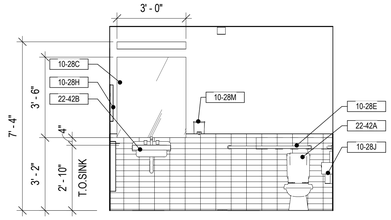

7D 7C 7B BATHROOM - ELEVATION 7A (7A)
3/8" = 1'-0"

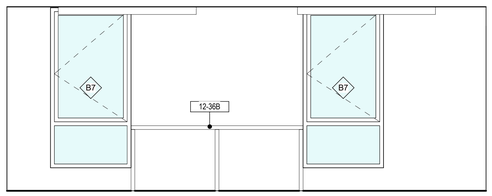

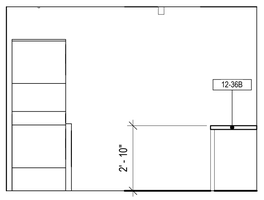

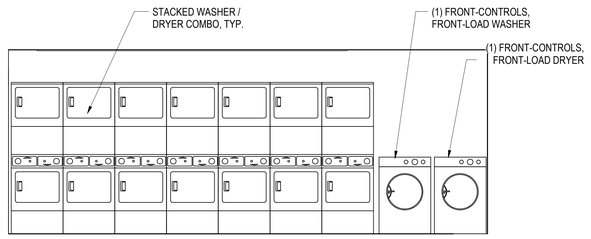

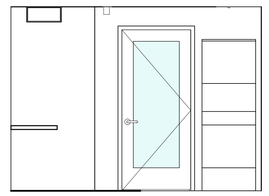

6D 6C 6B LAUNDRY ROOM - ELEVATION 6A (6A)
3/8" = 1'-0"

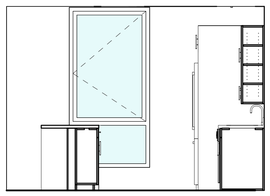

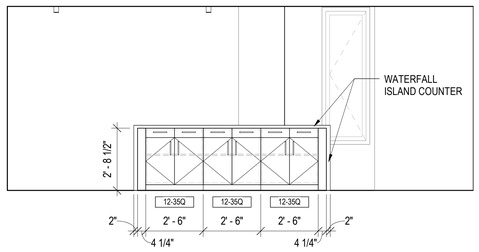

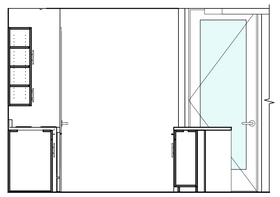

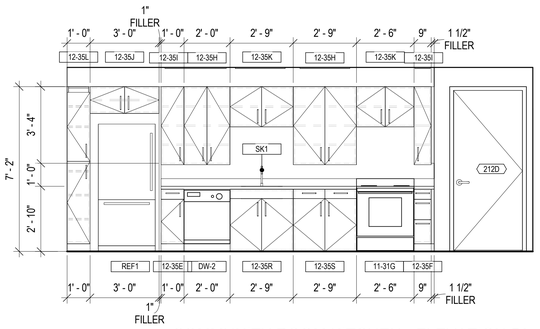

5D 5C 5B COMMUNITY ROOM KITCHEN - ELEVATION 5A (5A)
3/8" = 1'-0"

COMMUNITY ROOM - ELEVATION D (4)
3/8" = 1'-0"

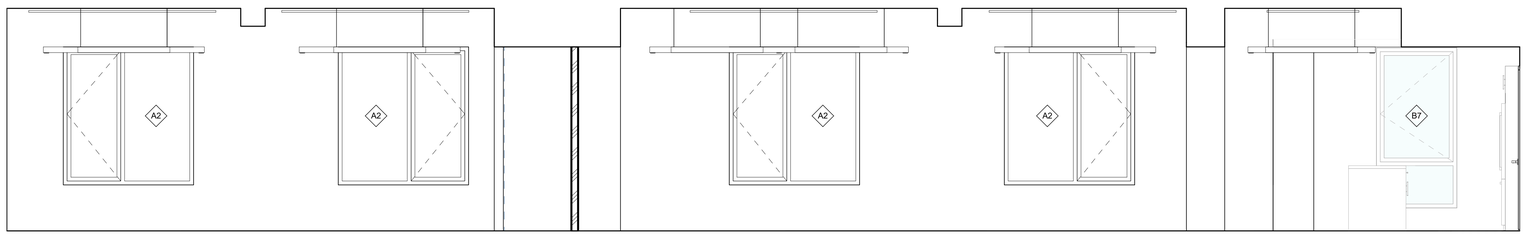

COMMUNITY ROOM - ELEVATION C (3)
3/8" = 1'-0"

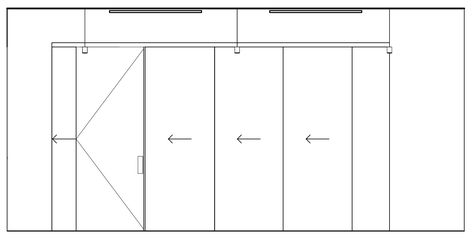

COMMUNITY ROOM - ELEVATION B (2)
3/8" = 1'-0"

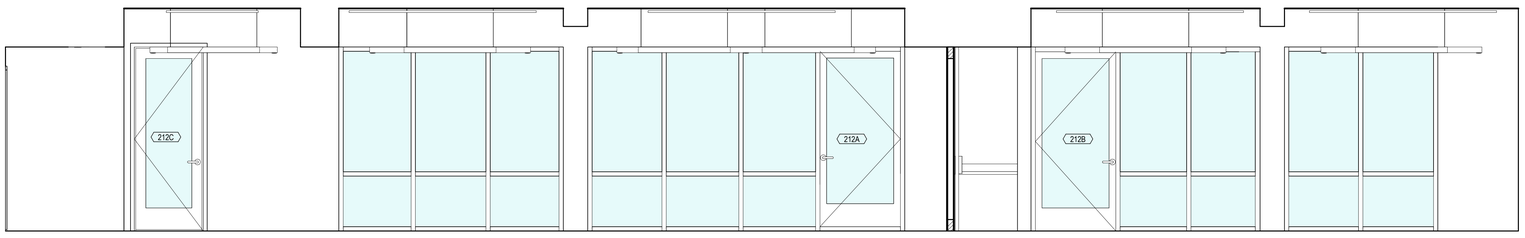

COMMUNITY ROOM - ELEVATION A (1)
3/8" = 1'-0"

INTERIOR ELEVATION NOTES

1. PROVIDE BLOCKING FOR ALL WALL-HUNG UNITS, ADJUSTABLE HEIGHT CABINETRY, MILLWORK, GRAB BARS AND ACCESSORIES.
2. SEE UNIT PLANS AND REFLECTED CEILING PLANS FOR EXTENT AND LOCATION OF GYPSUM BOARD SOFFITS.
3. PROVIDE WATERLINE TO REFRIGERATOR LOCATIONS FOR ICE MAKER WHERE SHOWN (SEE PLUMBING DRAWINGS).
4. @ ADAPTABLE UNITS, PROVIDE 30" x 48" CLEAR FLOOR SPACE CONFIGURED FOR FORWARD OR PARALLEL APPROACH CENTERED ON EACH SINK, DISHWASHER, REFRIGERATOR, AND WORKSURFACE. PROVIDE PARALLEL APPROACH AT RANGE.
5. @ ACCESSIBLE UNITS PROVIDE 30" x 48" CLEAR FLOOR SPACE CONFIGURED FOR PARALLEL APPROACH AT REFRIGERATOR, 30" x 48" CLEAR FLOOR SPACE CONFIGURED FOR FORWARD OR PARALLEL APPROACH CENTERED ON EACH SINK, DISHWASHER. WORK SURFACE TO BE PROVIDED ADJACENT TO RANGE. DISHWASHER TO BE ADJACENT TO SINK CABINET
6. PROVIDE ADJUSTABLE SHELVES TO ALL CABINETS, TYP.
7. KITCHEN SOFFITS TO EXTEND TO WITHIN 1" OF UPPER CABINETS.
8. SEE SPECIFICATIONS AND APPLICABLE APPENDICES FOR MORE INFORMATION ON KITCHEN AND BATH FIXTURES, FINISHES AND APPLIANCES.
9. SEE ELECTRICAL DRAWINGS FOR OUTLET TYPES. OUTLETS AND THERMOSTAT LOCATED PER ELEVATIONS ON 6/A4.00 AND G0.35 SHEETS.
10. VERIFY ALL DIMENSIONS IN FIELD PRIOR TO CABINET FABRICATION.
11. EXPOSED SIDES OF CABINETS TO MATCH FINISH AT FACE OF DOOR PANELS. FILLER AND END PANELS TO MATCH FACE OF FINISH AT DOOR PANELS.
12. PROVIDE SCRIBE STRIPS WHERE CABINETS INTERFACE WITH WALLS, CEILINGS OR SOFFITS

KEYNOTE LEGEND	
#	KEYNOTE
10-28C	MIRROR
10-28E	TOILET GRAB BAR
10-28H	SEMI-RECESSED PAPER TOWEL DISPENSER AND RECEPTACLE
10-28J	TOILET PAPER DISPENSER, LOCATED PER CBC 11B-604.9.6
10-28M	SOAP DISPENSER
10-28Q	SURFACE MOUNTED TOILET SANITARY DISPOSAL
11-31G	ACCESSIBLE ELECTRIC RANGE
12-35E	CASEWORK: KIT. BASE CABT., 23" DEEP, SINGLE DOOR, ADJUSTABLE SHELVES (DASHED)
12-35F	CASEWORK: KIT. DRAWER BASE CABT., 23" DEEP
12-35H	CASEWORK: KIT. UPPER CABT., 12" DEEP, DOUBLE DOOR, ADJUSTABLE SHELVES (DASHED)
12-35I	CASEWORK: KIT. UPPER CABT., 12" DEEP, SINGLE DOOR, ADJUSTABLE SHELVES (DASHED)
12-35J	CASEWORK: KIT. UPPER CABT., 24" DEEP, ABV. REF., ADJUSTABLE SHELVES (DASHED)
12-35K	CASEWORK: KIT. UPPER CABT., 12" DEEP, ABV. RANGE HOOD OR SINK OR WATERCLOSET
12-35L	CASEWORK: KIT. PANTRY CABT., 24" DEEP, ADJUSTABLE SHELVES (DASHED)
12-35Q	CASEWORK: KIT. BASE CABT., 12" DEEP, DOUBLE DOOR, ADJUSTABLE SHELVES (DASHED)
12-35R	CASEWORK: KIT. SINK BASE CABT., 23" DEEP W/ DOUBLE POCKET DOOR, NO SHELVES
12-35S	CASEWORK: KIT. BASE CABT., 23" DEEP W/ DOUBLE POCKET DOOR, NO SHELVES
12-36B	COUNTERTOP, SEE FINISH SCHEDULE
22-42A	TOILET, 17" MIN. 19" MAX. SEAT HEIGHT, S.P.D.
22-42B	LAVATORY SINK, S.P.D.
DW-2	ACCESSIBLE DISHWASHER
REF1	REFRIGERATOR
SK1	KITCHEN SINK

PYATOK
1611 TELEGRAPH AVE.
SUITE 200
OAKLAND, CA 94612
T. 510.465.7010 | F. 510.465.8575
www.pyatok.com

THE UNITY COUNCIL
1900 FRUITVALE AVE
#2A
OAKLAND, CA 94601

2700 INTERNATIONAL
OAKLAND, CA 94601

STAMP:
LICENSED ARCHITECT
PETER WALLER
C-23554
4/30/2023
STATE OF CALIFORNIA

ISSUE SCHEDULE

100 SD	5/11/22
50 DD	7/15/22
100 DD	9/16/22
50 CD	11/18/22
PERMIT SET	12/09/22

REVISION SCHEDULE

NO.	ISSUE	DATE

JOB NUMBER:	1937
DRAWN BY:	MA, DV, TN, MO, SP
CHECKED BY:	Checker
ISSUE DATE:	12/09/22
SCALE:	As indicated

TITLE:
INTERIOR ELEVATIONS - COMMON AREAS LEVEL 2

SHEET:
A5.06

PRELIMINARY - Not for Construction -

© 2019 PYATOK ARCHITECTURE & URBAN DESIGN

12/8/2022 6:10:37 PM

REFLECTED CEILING PLAN GENERAL NOTES

1. THESE PLANS ARE FOR COORDINATION OF LIGHT FIXTURES, SPRINKLERS, HVAC REGISTERS, SOFFITS AND OTHER CEILING DESIGN FEATURES. REFER TO MECHANICAL, ELECTRICAL, SPRINKLER, STRUCTURAL AND INTERIOR DRAWINGS FOR ADDITIONAL INFORMATION.
2. FOR ALL UNIT RCP PLANS SEE UNIT RCP SHEETS.
3. FOR UNIT LIGHTING, SEE UNIT RCP SHEETS AND ELECTRICAL DRAWINGS
4. FIRE-RATED CEILINGS ARE ALWAYS CONTINUOUS ABOVE DROPPED CEILINGS WITH FASTENING AND JOINT TAPE AS REQUIRED FOR SPECIFIED RATING.
5. FIXTURES SHALL BE CENTERED IN THE CEILING SPACE AND/OR ROOM, U.O.N.
6. ALL WALL-MOUNTED FIXTURES TO BE MAX. 4" PROJECTION FROM THE FINISH FACE OF THE WALL OR 6'-8" MINIMUM TO THE UNDERSIDE OF THE FIXTURE.
7. ALL DIMENSIONS ARE TO CENTER OF LIGHT FIXTURES, U.O.N.
8. CENTER SPRINKLER HEAD LOCATIONS BETWEEN LIGHTING FIXTURES AND/OR SMOKE DETECTORS, TYPICAL. LOCATION AND SPACING TO BE DETERMINED WITH APPROVED SHOP DRAWINGS.
9. SMOKE DETECTORS SHALL BE LOCATED A MINIMUM OF 3'-0" FROM SUPPLY AIR DIFFUSERS AND NO LESS THAN 4" FROM ANY WALL IF CEILING MOUNTED, 6" FROM CEILILING IF WALL MOUNTED
10. CEILING ACCESS PANELS REQUIRED AT ALL DAMPERS, VALVES AND TELECOM ACCESS POINTS. COORDINATE LOCATIONS PRIOR TO INSTALLATION OF ANY OF THESE SYSTEMS.
11. PROVIDE SOFFIT VENTILATION FOR ALL ENCLOSED AREAS AS REQUIRED FOR ADEQUATE AIR FLOW IN CAVITIES. SEE SOFFIT DETAILS FOR MORE INFORMATION.
12. WHERE SUSPENDED CEILINGS PROVIDED:
13. CHANGES IN CEILING ELEVATION SHALL BE PROVIDED WITH POSITIVE BRACING.
14. CABLE TRAYS AND ELECTRICAL CONDUITS SHALL BE SUPPORTED INDEPENDENTLY OF CEILING.
15. PROVIDE 2" OVERSIZE RING, SLEEVE OR ADAPTOR AT FIRE SPRINKLER HEADS AND OTHER PENETRATIONS.
16. SHOP DRAWINGS SHALL IDENTIFY LOCATIONS WHERE CEILING IS FIXED OR FREE TO MOVE AT CLOSURE ANGLES. ANGLES TO BE A MINIMUM OF 2" WIDE; OPEN SIDE TO BE 0.75" CLEAR OF WALL.

RCP LEGEND

- FINISHED CEILING ELEVATION ABOVE FINISHED FLOOR
- DROPPED GYP. BD. CEILING ON MTL. FRAMING
- EXPOSED UNDERSIDE OF CONCRETE SLAB
- DROPPED ACOUSTICAL CLOUD
- SHAFT OPENING, S.M.D.
- XX'-XX" A.F.F. CEILING HEIGHT ABOVE FINISH FLOOR

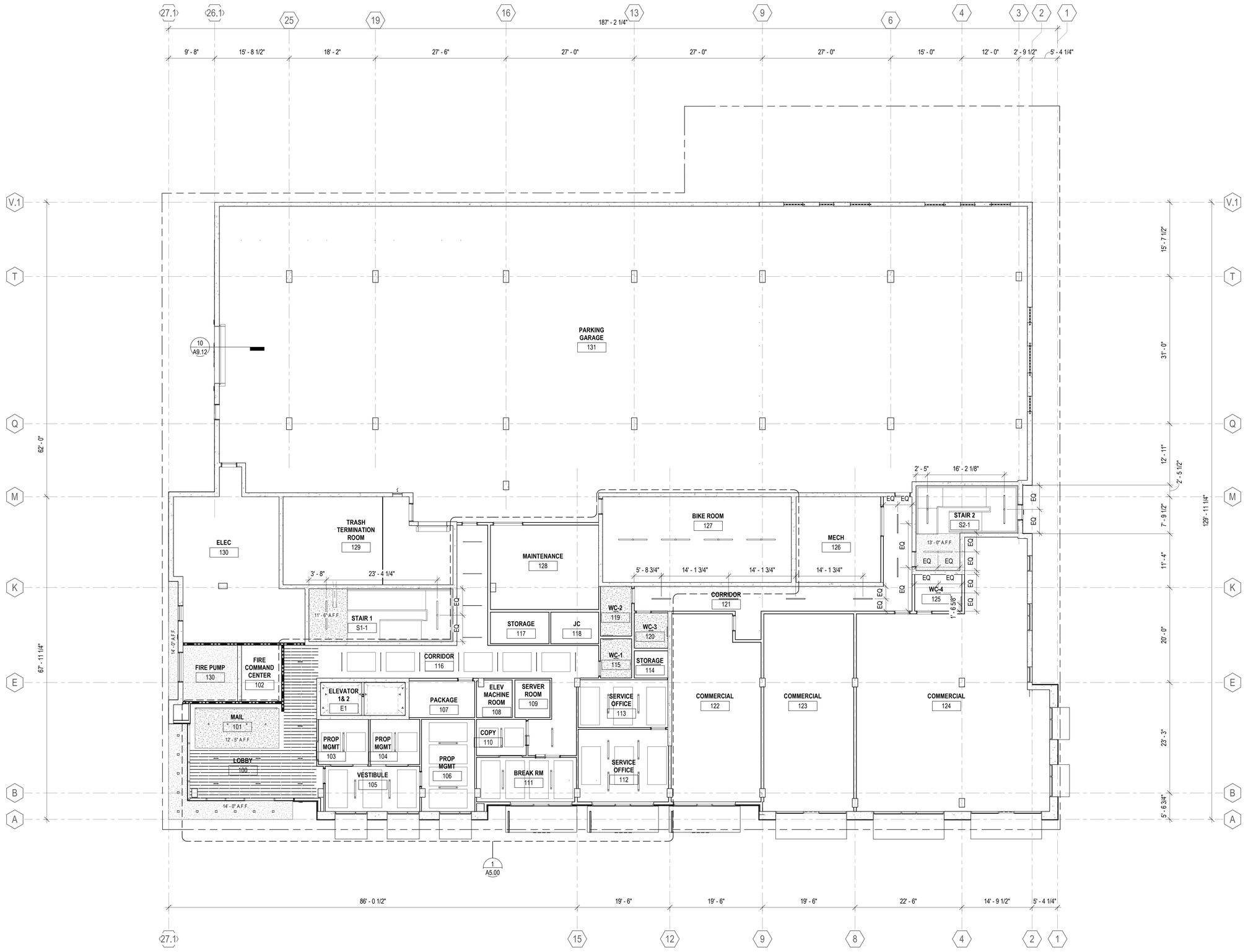

LEVEL 1 - RCP
1/8" = 1'-0"

SCALE: 1/8" = 1'-0"

PYATOK
1611 TELEGRAPH AVE.
SUITE 200
OAKLAND, CA 94612
T. 510.465.7010 | F. 510.465.8575
www.pyatok.com

THE UNITY COUNCIL
1900 FRUITVALE AVE
#2A
OAKLAND, CA 94601

2700 INTERNATIONAL
OAKLAND, CA 94601

STAMP:

PETER WALLER
C-23554
REGISTERED
4/30/2023

ISSUE SCHEDULE

100 SD	5/11/22
50 DD	7/15/22
100 DD	9/16/22
50 CD	11/18/22
PERMIT SET	12/09/22

REVISION SCHEDULE

NO.	ISSUE	DATE

JOB NUMBER:	1937
DRAWN BY:	MA, DV, TN, MO, SP
CHECKED BY:	Checker
ISSUE DATE:	12/09/22
SCALE:	As indicated

TITLE:
BUILDING RCP - LEVEL 1

SHEET:
A6.01

PRELIMINARY - Not for Construction -

© 2019 PYATOK ARCHITECTURE & URBAN DESIGN

12/9/2022 6:10:40 PM

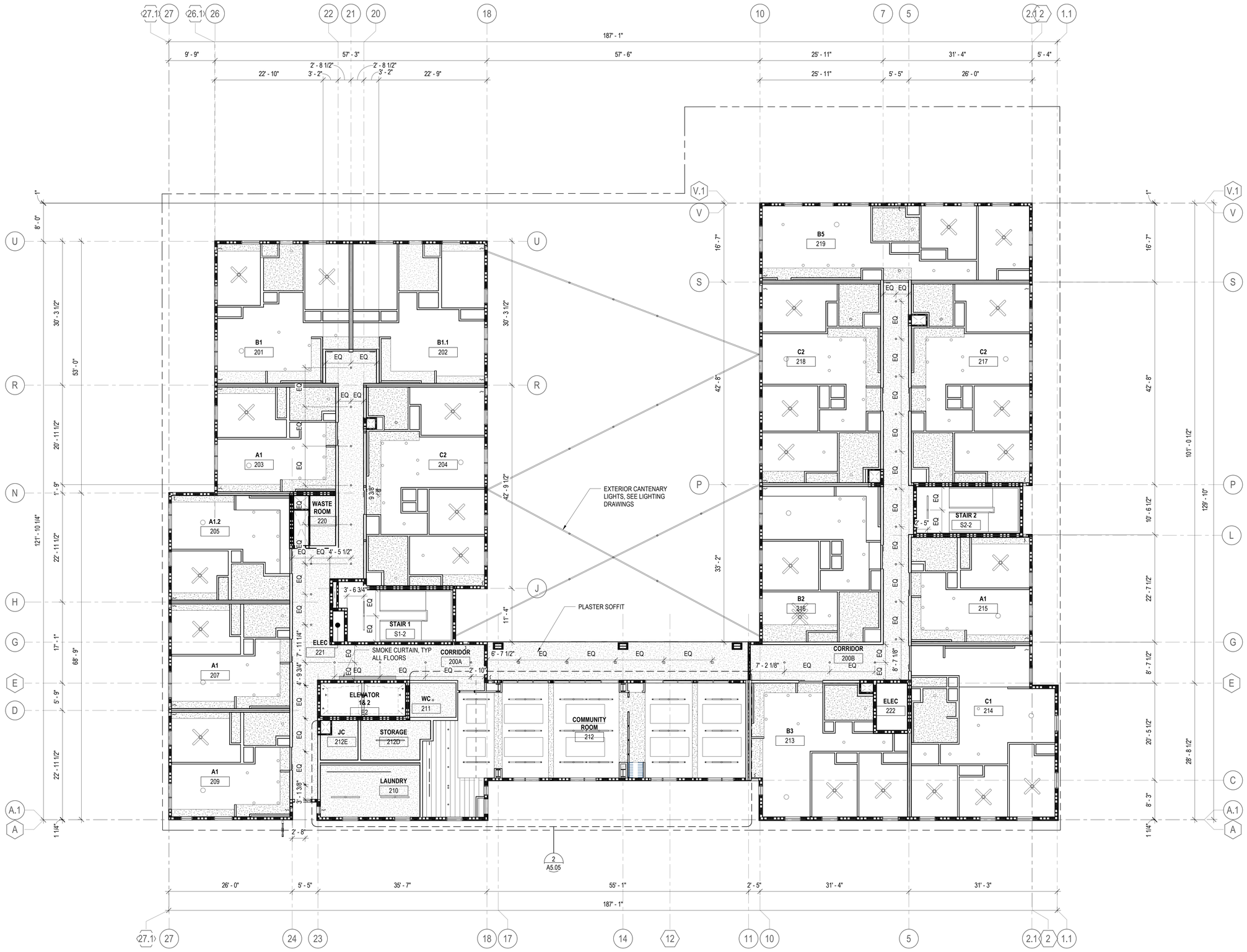

LEVEL 2 - RCP (1)
1/8" = 1'-0"

0' 4' 8' 16' 32'

SCALE: 1/8" = 1'-0"

REFLECTED CEILING PLAN GENERAL NOTES

1. THESE PLANS ARE FOR COORDINATION OF LIGHT FIXTURES, SPRINKLERS, HVAC REGISTERS, SOFFITS AND OTHER CEILING DESIGN FEATURES. REFER TO MECHANICAL, ELECTRICAL, SPRINKLER, STRUCTURAL AND INTERIOR DRAWINGS FOR ADDITIONAL INFORMATION.
2. FOR ALL UNIT RCP PLANS SEE UNIT RCP SHEETS.
3. FOR UNIT LIGHTING, SEE UNIT RCP SHEETS AND ELECTRICAL DRAWINGS
4. FIRE-RATED CEILINGS ARE ALWAYS CONTINUOUS ABOVE DROPPED CEILINGS WITH FASTENING AND JOINT TAPE AS REQUIRED FOR SPECIFIED RATING.
5. FIXTURES SHALL BE CENTERED IN THE CEILING SPACE AND/OR ROOM, U.O.N.
6. ALL WALL-MOUNTED FIXTURES TO BE MAX. 4" PROJECTION FROM THE FINISH FACE OF THE WALL OR 6'-8" MINIMUM TO THE UNDERSIDE OF THE FIXTURE.
7. ALL DIMENSIONS ARE TO CENTER OF LIGHT FIXTURES, U.O.N.
8. CENTER SPRINKLER HEAD LOCATIONS BETWEEN LIGHTING FIXTURES AND/OR SMOKE DETECTORS, TYPICAL. LOCATION AND SPACING TO BE DETERMINED WITH APPROVED SHOP DRAWINGS.
9. SMOKE DETECTORS SHALL BE LOCATED A MINIMUM OF 3'-0" FROM SUPPLY AIR DIFFUSERS AND NO LESS THAN 4" FROM ANY WALL IF CEILING MOUNTED, 6" FROM CEILILING IF WALL MOUNTED
10. CEILING ACCESS PANELS REQUIRED AT ALL DAMPERS, VALVES AND TELECOM ACCESS POINTS. COORDINATE LOCATIONS PRIOR TO INSTALLATION OF ANY OF THESE SYSTEMS.
11. PROVIDE SOFFIT VENTILATION FOR ALL ENCLOSED AREAS AS REQUIRED FOR ADEQUATE AIR FLOW IN CAVITIES. SEE SOFFIT DETAILS FOR MORE INFORMATION.
12. WHERE SUSPENDED CEILINGS PROVIDED:
13. CHANGES IN CEILING ELEVATION SHALL BE PROVIDED WITH POSITIVE BRACING.
14. CABLE TRAYS AND ELECTRICAL CONDUITS SHALL BE SUPPORTED INDEPENDENTLY OF CEILING.
15. PROVIDE 2" OVERSIZE RING, SLEEVE OR ADAPTOR AT FIRE SPRINKLER HEADS AND OTHER PENETRATIONS.
16. SHOP DRAWINGS SHALL IDENTIFY LOCATIONS WHERE CEILING IS FIXED OR FREE TO MOVE AT CLOSURE ANGLES. ANGLES TO BE A MINIMUM OF 2" WIDE; OPEN SIDE TO BE 0.75" CLEAR OF WALL.

RCP LEGEND

- FINISHED CEILING ELEVATION ABOVE FINISHED FLOOR
- DROPPED GYP. BD. CEILING ON MTL. FRAMING
- EXPOSED UNDERSIDE OF CONCRETE SLAB
- DROPPED ACOUSTICAL CLOUD
- SHAFT OPENING, S.M.D.
- XX'-XX" A.F.F. CEILING HEIGHT ABOVE FINISH FLOOR

PYATOK
1611 TELEGRAPH AVE.
SUITE 200
OAKLAND, CA 94612
T. 510.465.7010 | F. 510.465.8575
www.pyatok.com

THE UNITY COUNCIL
1900 FRUITVALE AVE
#2A
OAKLAND, CA 94601

2700 INTERNATIONAL
OAKLAND, CA 94601

STAMP:

PETER WALLER
C-23551
REGISTERED ARCHITECT
4/30/2023
STATE OF CALIFORNIA

ISSUE SCHEDULE

100 SD	5/11/22
50 DD	7/15/22
100 DD	9/16/22
50 CD	11/18/22
PERMIT SET	12/09/22

REVISION SCHEDULE

NO.	ISSUE	DATE

JOB NUMBER:	1937
DRAWN BY:	MA, DV, TN, MO, SP
CHECKED BY:	Checker
ISSUE DATE:	12/09/22
SCALE:	As indicated

TITLE:
BUILDING RCP - LEVEL 2

SHEET:
A6.02

PRELIMINARY - Not for Construction -

© 2019 PYATOK ARCHITECTURE & URBAN DESIGN

12/8/2022 6:10:44 PM

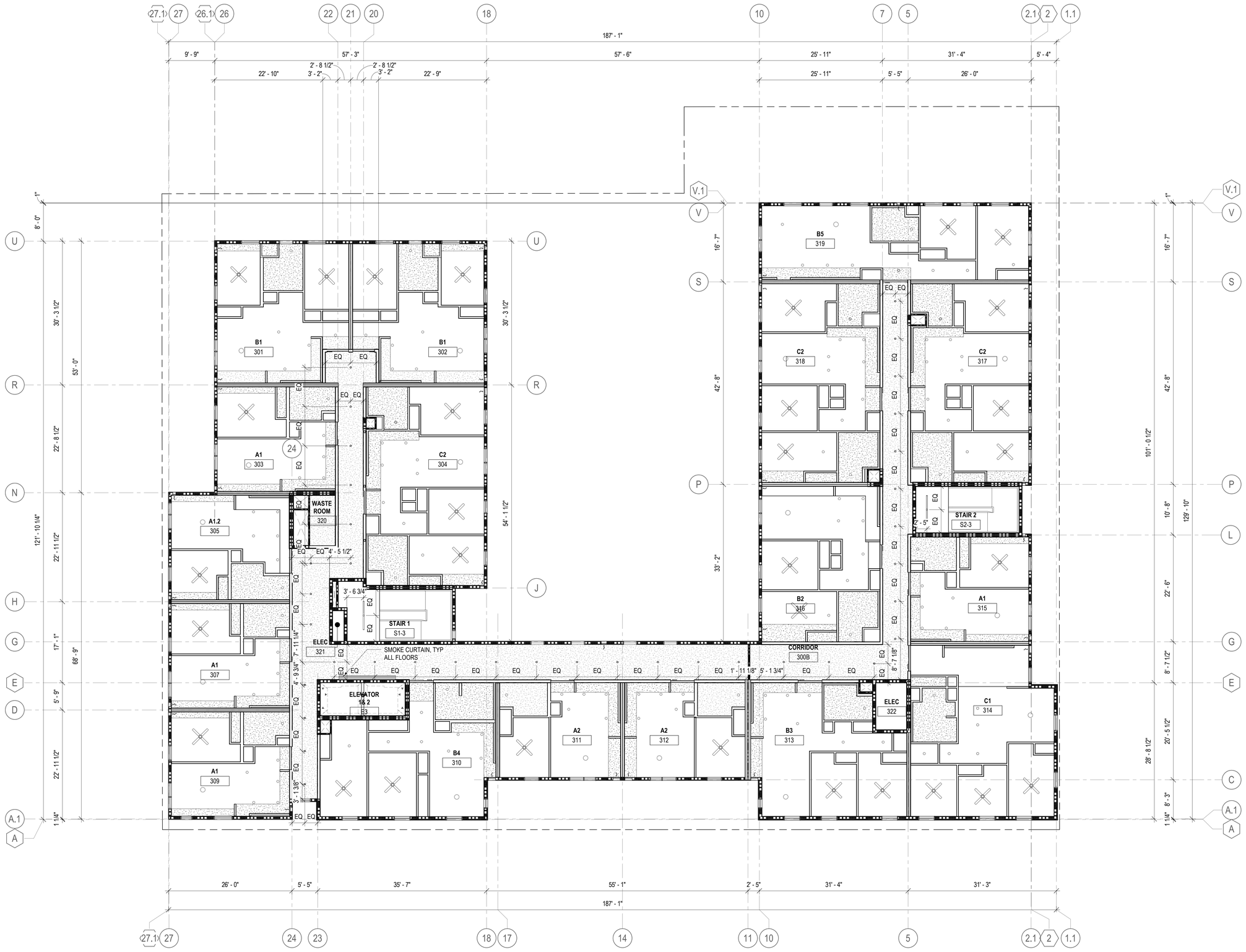

LEVEL 3 - RCP 1
1/8" = 1'-0"

0' 4' 8' 16' 32'

SCALE: 1/8" = 1'-0"

REFLECTED CEILING PLAN GENERAL NOTES

1. THESE PLANS ARE FOR COORDINATION OF LIGHT FIXTURES, SPRINKLERS, HVAC REGISTERS, SOFFITS AND OTHER CEILING DESIGN FEATURES. REFER TO MECHANICAL, ELECTRICAL, SPRINKLER, STRUCTURAL AND INTERIOR DRAWINGS FOR ADDITIONAL INFORMATION.
2. FOR ALL UNIT RCP PLANS SEE UNIT RCP SHEETS.
3. FOR UNIT LIGHTING, SEE UNIT RCP SHEETS AND ELECTRICAL DRAWINGS
4. FIRE-RATED CEILINGS ARE ALWAYS CONTINUOUS ABOVE DROPPED CEILINGS WITH FASTENING AND JOINT TAPE AS REQUIRED FOR SPECIFIED RATING.
5. FIXTURES SHALL BE CENTERED IN THE CEILING SPACE AND/OR ROOM, U.O.N.
6. ALL WALL-MOUNTED FIXTURES TO BE MAX. 4" PROJECTION FROM THE FINISH FACE OF THE WALL OR 6'-8" MINIMUM TO THE UNDERSIDE OF THE FIXTURE.
7. ALL DIMENSIONS ARE TO CENTER OF LIGHT FIXTURES, U.O.N.
8. CENTER SPRINKLER HEAD LOCATIONS BETWEEN LIGHTING FIXTURES AND/OR SMOKE DETECTORS, TYPICAL. LOCATION AND SPACING TO BE DETERMINED WITH APPROVED SHOP DRAWINGS.
9. SMOKE DETECTORS SHALL BE LOCATED A MINIMUM OF 3'-0" FROM SUPPLY AIR DIFFUSERS AND NO LESS THAN 4" FROM ANY WALL IF CEILING MOUNTED, 6" FROM CEILILING IF WALL MOUNTED
10. CEILING ACCESS PANELS REQUIRED AT ALL DAMPERS, VALVES AND TELECOM ACCESS POINTS. COORDINATE LOCATIONS PRIOR TO INSTALLATION OF ANY OF THESE SYSTEMS.
11. PROVIDE SOFFIT VENTILATION FOR ALL ENCLOSED AREAS AS REQUIRED FOR ADEQUATE AIR FLOW IN CAVITIES. SEE SOFFIT DETAILS FOR MORE INFORMATION.
12. WHERE SUSPENDED CEILINGS PROVIDED:
13. CHANGES IN CEILING ELEVATION SHALL BE PROVIDED WITH POSITIVE BRACING.
14. CABLE TRAYS AND ELECTRICAL CONDUITS SHALL BE SUPPORTED INDEPENDENTLY OF CEILING.
15. PROVIDE 2" OVERSIZE RING, SLEEVE OR ADAPTOR AT FIRE SPRINKLER HEADS AND OTHER PENETRATIONS.
16. SHOP DRAWINGS SHALL IDENTIFY LOCATIONS WHERE CEILING IS FIXED OR FREE TO MOVE AT CLOSURE ANGLES. ANGLES TO BE A MINIMUM OF 2" WIDE; OPEN SIDE TO BE 0.75" CLEAR OF WALL.

RCP LEGEND

- FINISHED CEILING ELEVATION ABOVE FINISHED FLOOR
- DROPPED GYP. BD. CEILING ON MTL. FRAMING
- EXPOSED UNDERSIDE OF CONCRETE SLAB
- DROPPED ACOUSTICAL CLOUD
- SHAFT OPENING, S.M.D.
- XX'-XX" A.F.F. CEILING HEIGHT ABOVE FINISH FLOOR

PYATOK
1611 TELEGRAPH AVE.
SUITE 200
OAKLAND, CA 94612
T. 510.465.7010 | F. 510.465.8575
www.pyatok.com

THE UNITY COUNCIL
1900 FRUITVALE AVE
#2A
OAKLAND, CA 94601

2700 INTERNATIONAL
OAKLAND, CA 94601

STAMP:

PETER WALLER
C-23551
REVIEWED
4/30/2023
LICENSED ARCHITECT
STATE OF CALIFORNIA

ISSUE SCHEDULE

100 SD	5/11/22
50 DD	7/15/22
100 DD	9/16/22
50 CD	11/18/22
PERMIT SET	12/09/22

REVISION SCHEDULE

NO.	ISSUE	DATE

JOB NUMBER:	1937
DRAWN BY:	MA, DV, TN, MO, SP
CHECKED BY:	Checker
ISSUE DATE:	12/09/22
SCALE:	As indicated

TITLE:
BUILDING RCP - LEVEL 3

SHEET:
A6.03

PRELIMINARY - Not for Construction -

© 2019 PYATOK ARCHITECTURE & URBAN DESIGN

12/8/2022 6:10:47 PM

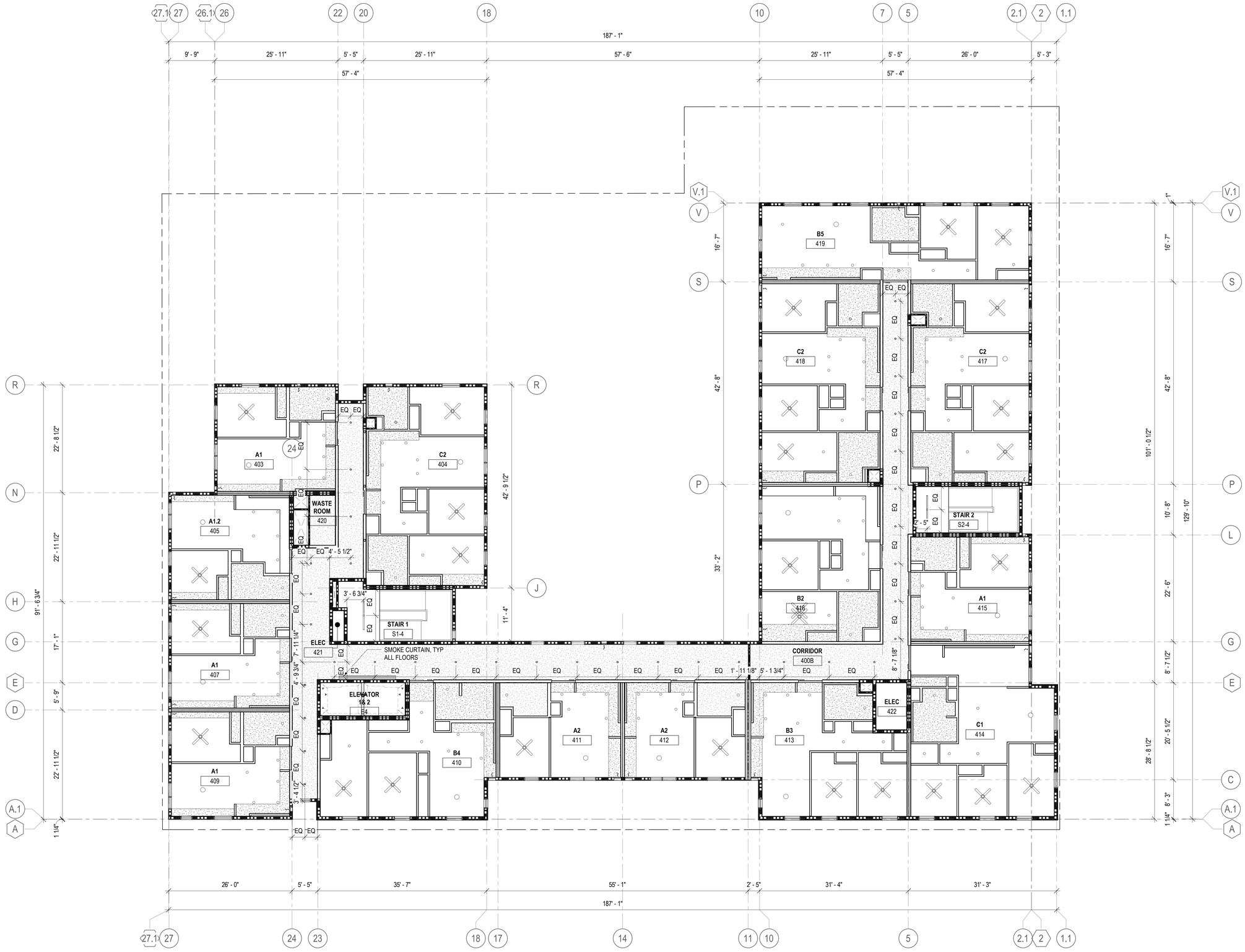

LEVEL 4 - RCP (1)
1/8" = 1'-0"

0' 4' 8' 16' 32'

SCALE: 1/8" = 1'-0"

REFLECTED CEILING PLAN GENERAL NOTES

1. THESE PLANS ARE FOR COORDINATION OF LIGHT FIXTURES, SPRINKLERS, HVAC REGISTERS, SOFFITS AND OTHER CEILING DESIGN FEATURES. REFER TO MECHANICAL, ELECTRICAL, SPRINKLER, STRUCTURAL AND INTERIOR DRAWINGS FOR ADDITIONAL INFORMATION.
2. FOR ALL UNIT RCP PLANS SEE UNIT RCP SHEETS.
3. FOR UNIT LIGHTING, SEE UNIT RCP SHEETS AND ELECTRICAL DRAWINGS
4. FIRE-RATED CEILINGS ARE ALWAYS CONTINUOUS ABOVE DROPPED CEILINGS WITH FASTENING AND JOINT TAPE AS REQUIRED FOR SPECIFIED RATING.
5. FIXTURES SHALL BE CENTERED IN THE CEILING SPACE AND/OR ROOM, U.O.N.
6. ALL WALL-MOUNTED FIXTURES TO BE MAX. 4" PROJECTION FROM THE FINISH FACE OF THE WALL OR 6'-8" MINIMUM TO THE UNDERSIDE OF THE FIXTURE.
7. ALL DIMENSIONS ARE TO CENTER OF LIGHT FIXTURES, U.O.N.
8. CENTER SPRINKLER HEAD LOCATIONS BETWEEN LIGHTING FIXTURES AND/OR SMOKE DETECTORS, TYPICAL. LOCATION AND SPACING TO BE DETERMINED WITH APPROVED SHOP DRAWINGS.
9. SMOKE DETECTORS SHALL BE LOCATED A MINIMUM OF 3'-0" FROM SUPPLY AIR DIFFUSERS AND NO LESS THAN 4" FROM ANY WALL IF CEILING MOUNTED, 6" FROM CEILILING IF WALL MOUNTED
10. CEILING ACCESS PANELS REQUIRED AT ALL DAMPERS, VALVES AND TELECOM ACCESS POINTS. COORDINATE LOCATIONS PRIOR TO INSTALLATION OF ANY OF THESE SYSTEMS.
11. PROVIDE SOFFIT VENTILATION FOR ALL ENCLOSED AREAS AS REQUIRED FOR ADEQUATE AIR FLOW IN CAVITIES. SEE SOFFIT DETAILS FOR MORE INFORMATION.
12. WHERE SUSPENDED CEILINGS PROVIDED:
13. CHANGES IN CEILING ELEVATION SHALL BE PROVIDED WITH POSITIVE BRACING.
14. CABLE TRAYS AND ELECTRICAL CONDUITS SHALL BE SUPPORTED INDEPENDENTLY OF CEILING.
15. PROVIDE 2" OVERSIZE RING, SLEEVE OR ADAPTOR AT FIRE SPRINKLER HEADS AND OTHER PENETRATIONS.
16. SHOP DRAWINGS SHALL IDENTIFY LOCATIONS WHERE CEILING IS FIXED OR FREE TO MOVE AT CLOSURE ANGLES. ANGLES TO BE A MINIMUM OF 2" WIDE; OPEN SIDE TO BE 0.75" CLEAR OF WALL.

RCP LEGEND

- FINISHED CEILING ELEVATION ABOVE FINISHED FLOOR
- DROPPED GYP. BD. CEILING ON MTL. FRAMING
- EXPOSED UNDERSIDE OF CONCRETE SLAB
- DROPPED ACOUSTICAL CLOUD
- SHAFT OPENING, S.M.D.
- XX'-XX" A.F.F. CEILING HEIGHT ABOVE FINISH FLOOR

PYATOK
1611 TELEGRAPH AVE.
SUITE 200
OAKLAND, CA 94612
T. 510.465.7010 | F. 510.465.8575
www.pyatok.com

THE UNITY COUNCIL
1900 FRUITVALE AVE
#2A
OAKLAND, CA 94601

2700 INTERNATIONAL
OAKLAND, CA 94601

STAMP:

LICENSED ARCHITECT
PETER WALLER
C-23551
REGISTERED
4/30/2023
STATE OF CALIFORNIA

ISSUE SCHEDULE

100 SD	5/11/22
50 DD	7/15/22
100 DD	9/16/22
50 CD	11/18/22
PERMIT SET	12/09/22

REVISION SCHEDULE

NO.	ISSUE	DATE

JOB NUMBER:	1937
DRAWN BY:	MA, DV, TN, MO, SP
CHECKED BY:	Checker
ISSUE DATE:	12/09/22
SCALE:	As indicated

TITLE:
BUILDING RCP - LEVEL 4

SHEET:
A6.04

PRELIMINARY - Not for Construction -

© 2019 PYATOK ARCHITECTURE & URBAN DESIGN

12/8/2022 6:10:50 PM

REFLECTED CEILING PLAN GENERAL NOTES

1. THESE PLANS ARE FOR COORDINATION OF LIGHT FIXTURES, SPRINKLERS, HVAC REGISTERS, SOFFITS AND OTHER CEILING DESIGN FEATURES. REFER TO MECHANICAL, ELECTRICAL, SPRINKLER, STRUCTURAL AND INTERIOR DRAWINGS FOR ADDITIONAL INFORMATION.
2. FOR ALL UNIT RCP PLANS SEE UNIT RCP SHEETS.
3. FOR UNIT LIGHTING, SEE UNIT RCP SHEETS AND ELECTRICAL DRAWINGS
4. FIRE-RATED CEILINGS ARE ALWAYS CONTINUOUS ABOVE DROPPED CEILINGS WITH FASTENING AND JOINT TAPE AS REQUIRED FOR SPECIFIED RATING.
5. FIXTURES SHALL BE CENTERED IN THE CEILING SPACE AND/OR ROOM, U.O.N.
6. ALL WALL-MOUNTED FIXTURES TO BE MAX. 4" PROJECTION FROM THE FINISH FACE OF THE WALL OR 6'-8" MINIMUM TO THE UNDERSIDE OF THE FIXTURE.
7. ALL DIMENSIONS ARE TO CENTER OF LIGHT FIXTURES, U.O.N.
8. CENTER SPRINKLER HEAD LOCATIONS BETWEEN LIGHTING FIXTURES AND/OR SMOKE DETECTORS, TYPICAL. LOCATION AND SPACING TO BE DETERMINED WITH APPROVED SHOP DRAWINGS.
9. SMOKE DETECTORS SHALL BE LOCATED A MINIMUM OF 3'-0" FROM SUPPLY AIR DIFFUSERS AND NO LESS THAN 4" FROM ANY WALL IF CEILING MOUNTED, 6" FROM CEILILING IF WALL MOUNTED
10. CEILING ACCESS PANELS REQUIRED AT ALL DAMPERS, VALVES AND TELECOM ACCESS POINTS. COORDINATE LOCATIONS PRIOR TO INSTALLATION OF ANY OF THESE SYSTEMS.
11. PROVIDE SOFFIT VENTILATION FOR ALL ENCLOSED AREAS AS REQUIRED FOR ADEQUATE AIR FLOW IN CAVITIES. SEE SOFFIT DETAILS FOR MORE INFORMATION.
12. WHERE SUSPENDED CEILINGS PROVIDED:
13. CHANGES IN CEILING ELEVATION SHALL BE PROVIDED WITH POSITIVE BRACING.
14. CABLE TRAYS AND ELECTRICAL CONDUITS SHALL BE SUPPORTED INDEPENDENTLY OF CEILING.
15. PROVIDE 2" OVERSIZE RING, SLEEVE OR ADAPTOR AT FIRE SPRINKLER HEADS AND OTHER PENETRATIONS.
16. SHOP DRAWINGS SHALL IDENTIFY LOCATIONS WHERE CEILING IS FIXED OR FREE TO MOVE AT CLOSURE ANGLES. ANGLES TO BE A MINIMUM OF 2" WIDE; OPEN SIDE TO BE 0.75" CLEAR OF WALL.

RCP LEGEND

- FINISHED CEILING ELEVATION ABOVE FINISHED FLOOR
- DROPPED GYP. BD. CEILING ON MTL. FRAMING
- EXPOSED UNDERSIDE OF CONCRETE SLAB
- DROPPED ACOUSTICAL CLOUD
- SHAFT OPENING, S.M.D.
- XX'-XX" A.F.F. CEILING HEIGHT ABOVE FINISH FLOOR

LEVEL 5 - RCP
1/8" = 1'-0"

SCALE: 1/8" = 1'-0"

PYATOK
1611 TELEGRAPH AVE.
SUITE 200
OAKLAND, CA 94612
T. 510.465.7010 | F. 510.465.8575
www.pyatok.com

THE UNITY COUNCIL
1900 FRUITVALE AVE
#2A
OAKLAND, CA 94601

2700 INTERNATIONAL
OAKLAND, CA 94601

STAMP:
PETER WALLER
C-23554
12/09/2022

ISSUE SCHEDULE

100 SD	5/11/22
50 DD	7/15/22
100 DD	9/16/22
50 CD	11/18/22
PERMIT SET	12/09/22

REVISION SCHEDULE

NO.	ISSUE	DATE

JOB NUMBER:	1937
DRAWN BY:	MA, DV, TN, MO, SP
CHECKED BY:	Checker
ISSUE DATE:	12/09/22
SCALE:	As indicated

TITLE:
BUILDING RCP - LEVEL 5

SHEET:
A6.05

PRELIMINARY - Not for Construction -

© 2019 PYATOK ARCHITECTURE & URBAN DESIGN

12/9/2022 6:10:54 PM

REFLECTED CEILING PLAN GENERAL NOTES

1. THESE PLANS ARE FOR COORDINATION OF LIGHT FIXTURES, SPRINKLERS, HVAC REGISTERS, SOFFITS AND OTHER CEILING DESIGN FEATURES. REFER TO MECHANICAL, ELECTRICAL, SPRINKLER, STRUCTURAL AND INTERIOR DRAWINGS FOR ADDITIONAL INFORMATION.
2. FOR ALL UNIT RCP PLANS SEE UNIT RCP SHEETS.
3. FOR UNIT LIGHTING, SEE UNIT RCP SHEETS AND ELECTRICAL DRAWINGS
4. FIRE-RATED CEILINGS ARE ALWAYS CONTINUOUS ABOVE DROPPED CEILINGS WITH FASTENING AND JOINT TAPE AS REQUIRED FOR SPECIFIED RATING.
5. FIXTURES SHALL BE CENTERED IN THE CEILING SPACE AND/OR ROOM, U.O.N.
6. ALL WALL-MOUNTED FIXTURES TO BE MAX. 4" PROJECTION FROM THE FINISH FACE OF THE WALL OR 6'-8" MINIMUM TO THE UNDERSIDE OF THE FIXTURE.
7. ALL DIMENSIONS ARE TO CENTER OF LIGHT FIXTURES, U.O.N.
8. CENTER SPRINKLER HEAD LOCATIONS BETWEEN LIGHTING FIXTURES AND/OR SMOKE DETECTORS, TYPICAL. LOCATION AND SPACING TO BE DETERMINED WITH APPROVED SHOP DRAWINGS.
9. SMOKE DETECTORS SHALL BE LOCATED A MINIMUM OF 3'-0" FROM SUPPLY AIR DIFFUSERS AND NO LESS THAN 4" FROM ANY WALL IF CEILING MOUNTED, 6" FROM CEILILING IF WALL MOUNTED
10. CEILING ACCESS PANELS REQUIRED AT ALL DAMPERS, VALVES AND TELECOM ACCESS POINTS. COORDINATE LOCATIONS PRIOR TO INSTALLATION OF ANY OF THESE SYSTEMS.
11. PROVIDE SOFFIT VENTILATION FOR ALL ENCLOSED AREAS AS REQUIRED FOR ADEQUATE AIR FLOW IN CAVITIES. SEE SOFFIT DETAILS FOR MORE INFORMATION.
12. WHERE SUSPENDED CEILINGS PROVIDED:
13. CHANGES IN CEILING ELEVATION SHALL BE PROVIDED WITH POSITIVE BRACING.
14. CABLE TRAYS AND ELECTRICAL CONDUITS SHALL BE SUPPORTED INDEPENDENTLY OF CEILING.
15. PROVIDE 2" OVERSIZE RING, SLEEVE OR ADAPTOR AT FIRE SPRINKLER HEADS AND OTHER PENETRATIONS.
16. SHOP DRAWINGS SHALL IDENTIFY LOCATIONS WHERE CEILING IS FIXED OR FREE TO MOVE AT CLOSURE ANGLES. ANGLES TO BE A MINIMUM OF 2" WIDE; OPEN SIDE TO BE 0.75" CLEAR OF WALL.

RCP LEGEND

- FINISHED CEILING ELEVATION ABOVE FINISHED FLOOR
- DROPPED GYP. BD. CEILING ON MTL. FRAMING
- EXPOSED UNDERSIDE OF CONCRETE SLAB
- DROPPED ACOUSTICAL CLOUD
- SHAFT OPENING, S.M.D.
- XX'-XX" A.F.F. CEILING HEIGHT ABOVE FINISH FLOOR

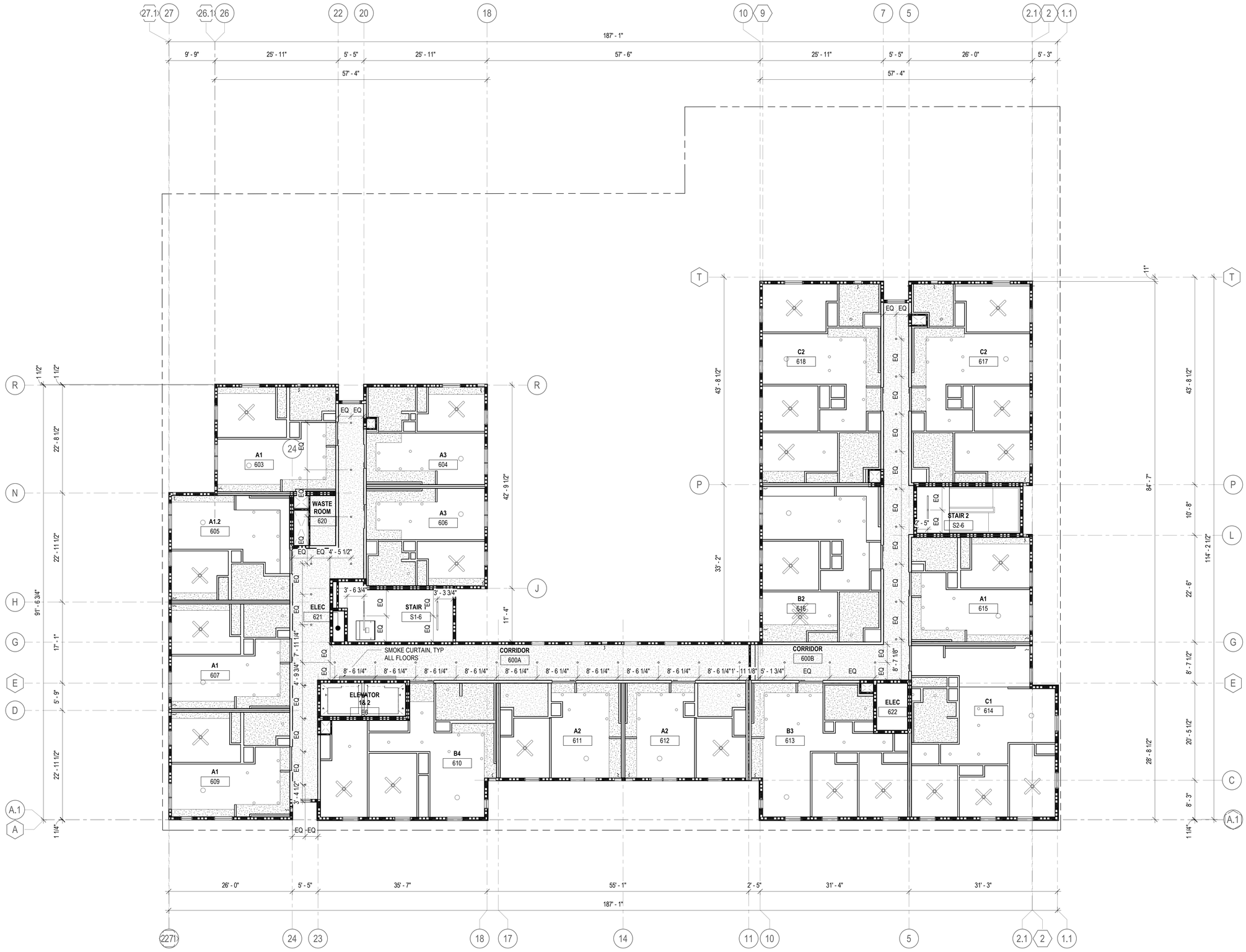

LEVEL 6 - RCP
1/8" = 1'-0"

SCALE: 1/8" = 1'-0"

PYATOK
1611 TELEGRAPH AVE.
SUITE 200
OAKLAND, CA 94612
T. 510.465.7010 | F. 510.465.8575
www.pyatok.com

THE UNITY COUNCIL
1900 FRUITVALE AVE
#2A
OAKLAND, CA 94601

2700 INTERNATIONAL
OAKLAND, CA 94601

STAMP:

LICENSED ARCHITECT — PETER WALLER — C-23557 — REGISTERED — 4/30/2023 — STATE OF CALIFORNIA

ISSUE SCHEDULE

100 SD	5/11/22
50 DD	7/15/22
100 DD	9/16/22
50 CD	11/18/22
PERMIT SET	12/09/22

REVISION SCHEDULE

NO.	ISSUE	DATE

JOB NUMBER:	1937
DRAWN BY:	MA, DV, TN, MO, SP
CHECKED BY:	Checker
ISSUE DATE:	12/09/22
SCALE:	As indicated

TITLE:

BUILDING RCP - LEVEL 6

SHEET:

A6.06

PRELIMINARY - Not for Construction -

© 2019 PYATOK ARCHITECTURE & URBAN DESIGN

12/8/2022 6:10:58 PM

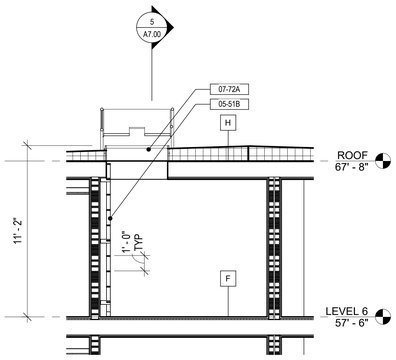

STAIR 1 - SECTION - NORTH/SOUTH @ LADDER (7)
1/4" = 1'-0"

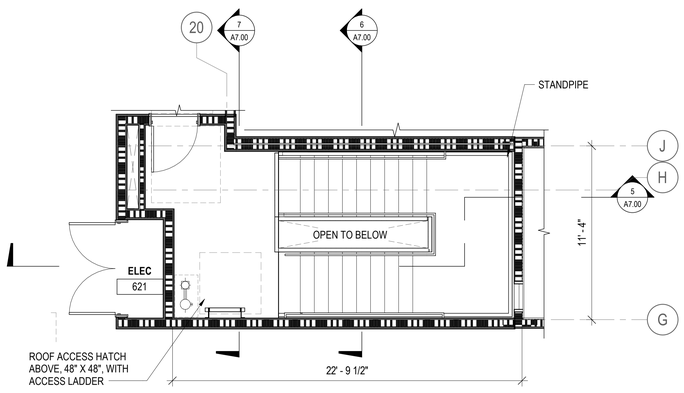

STAIR 1 PLAN - LEVEL 6 (4)
1/4" = 1'-0"

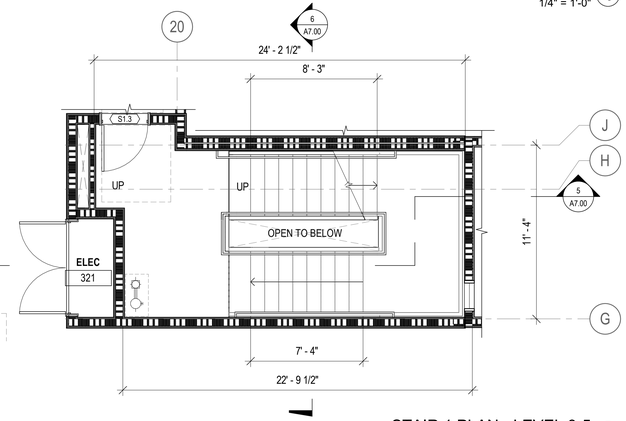

STAIR 1 PLAN - LEVEL 3-5 (3)
1/4" = 1'-0"

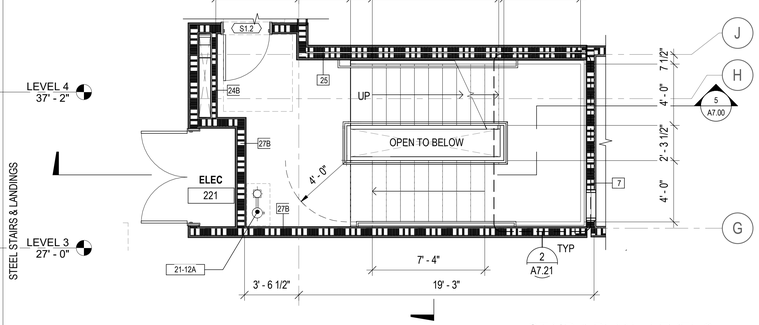

STAIR 1 PLAN - LEVEL 2 (2)
1/4" = 1'-0"

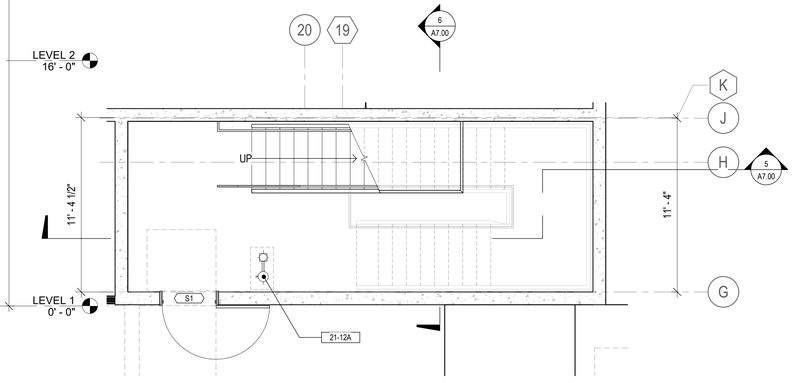

STAIR 1 PLAN - LEVEL 1 (1)
1/4" = 1'-0"

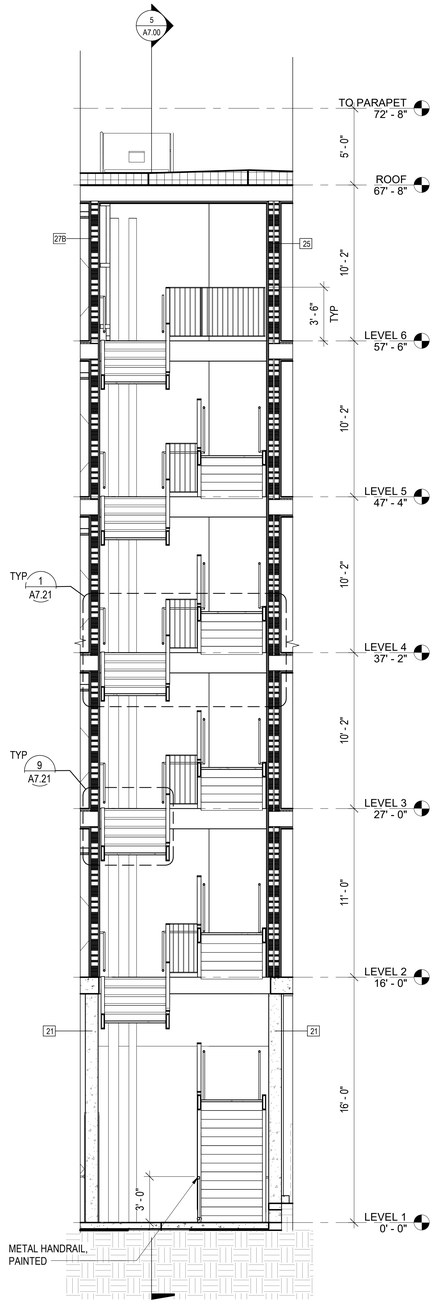

STAIR 1 - SECTION - NORTH/SOUTH (6)
1/4" = 1'-0"

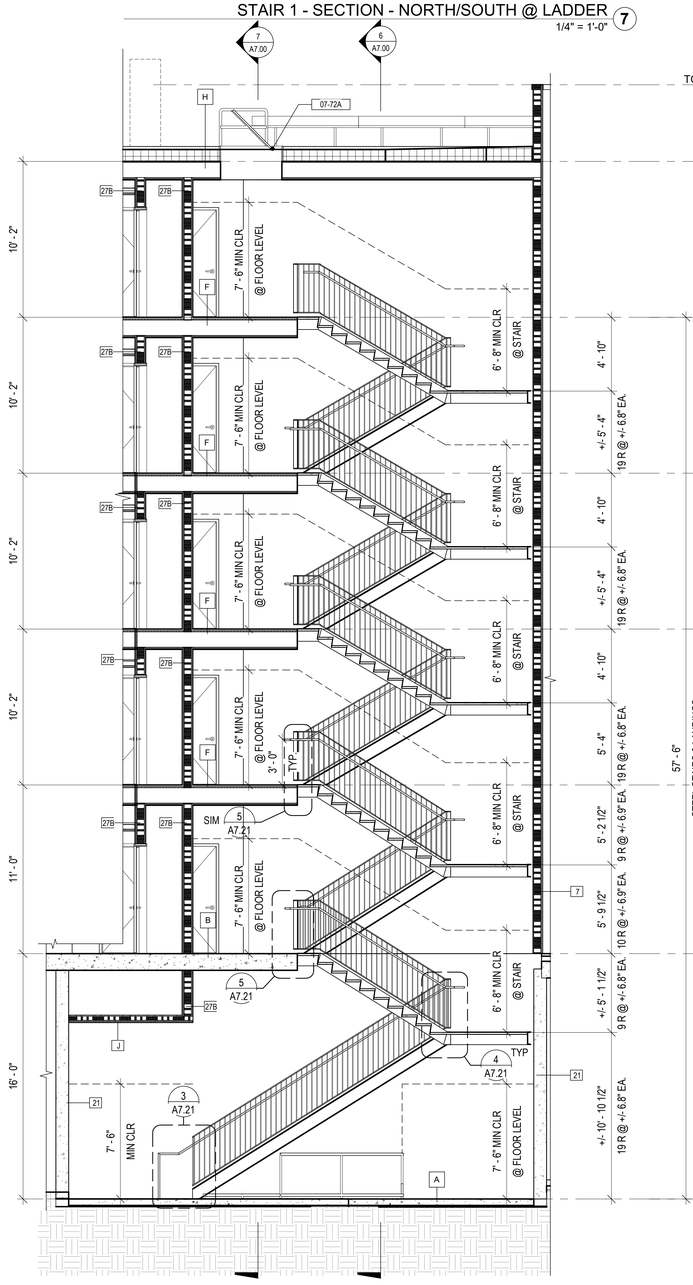

STAIR 1 - SECTION - EAST/WEST (5)
1/4" = 1'-0"

COMMON USE - STAIR GENERAL NOTES

1. SEE STRUCTURAL DRAWINGS FOR FRAMING OF WALLS, ROOF, LANDINGS, FLOORS AND STAIRS.
2. MINIMUM CLEAR HEADROOM 6'-8", MINIMUM CLEAR WIDTH PER CBC REQUIREMENTS
3. PROVIDE CONTINUOUS HANDRAIL 1-1/4" MINIMUM TO 1 1/2" MAXIMUM OUTSIDE DIAMETER AND 1-1/2" MINIMUM CLEAR FROM THE WALL. EXTEND AND RETURN RAIL ENDS PER CBC 11B-505
4. WHERE NEEDED, INTERMEDIATE BALUSTERS SHALL BE SPACED 4" MAXIMUM APART ON CENTER
5. SEE ADDITIONAL INFORMATION ON STAIRWAYS AND HANDRAILS ON SHEET G0.31.

INTERIOR STAIR GENERAL NOTES

1. SEE STRUCTURAL DRAWINGS FOR FRAMING OF WALLS, ROOF, LANDINGS, FLOORS AND STAIRS.

2. HEADROOM 6'-8" MINIMUM CLEAR PER CBC SECTION 1003.3.1. WIDTH 3'-0" MINIMUM CLEAR PER CBC SECTION 1003.3.4.

3. PROVIDE CONTINUOUS HANDRAIL 1-1/2" MINIMUM TO 2" MAXIMUM DIAMETER CROSS-SECTION AND 1-1/2" MINIMUM CLEAR FROM THE WALL. EXTEND AND RETURN RAIL ENDS PER CBC SECTION 1003.3.3.

4. INTERMEDIATE BALUSTERS SHALL BE SPACED 4" MAXIMUM APART ON CENTER PER CBC SECTION 509.3.

5. SEE BARRIER FREE NOTES 3 AND 4 FOR INFORMATION ON LANDINGS AND CLEAR DIMENSIONS.

6. WITHIN INDIVIDUAL DWELLING UNITS, TREADS MINIMUM 10" DEPTH, RISERS 7 3/4" MAXIMUM HEIGHT PER CBC SECTION 1003.5.

7. INSTALL FIRE BLOCKING AT STRINGERS TOP, MIDSPAN, BOTTOM AND AT ADJACENT WALL(S) PER CBC SECTION 708.2.1.

8. PROTECT USABLE SPACE UNDER STAIR WITH TWO (2) LAYERS OF 5/8" TYPE 'X' GYPSUM BOARD PER CBC SECTION 1011.7.3.

KEYNOTE LEGEND	
#	KEYNOTE
05-51B	WALL MOUNTED STEEL LADDER, VERIFY LOCATION WITH ELEVATOR MFR
07-72A	ROOF HATCH, 48" x 48"
21-12A	CLASS I STANDPIPE SYSTEM W/ CANE DETECTION, SEE DEFERRED SUBMITTAL

PYATOK
1611 TELEGRAPH AVE.
SUITE 200
OAKLAND, CA 94612
T. 510.465.7010 | F. 510.465.8575
www.pyatok.com

THE UNITY COUNCIL
1900 FRUITVALE AVE
#2A
OAKLAND, CA 94601

2700 INTERNATIONAL
OAKLAND, CA 94601

STAMP:
LICENSED ARCHITECT
PETER WALLER
C-23554
4/30/2023
STATE OF CALIFORNIA

ISSUE SCHEDULE

100 SD	5/11/22
50 DD	7/15/22
100 DD	9/16/22
50 CD	11/18/22
PERMIT SET	12/09/22

REVISION SCHEDULE

NO.	ISSUE	DATE

JOB NUMBER:	1937
DRAWN BY:	MA, DV, TN, MO, SP
CHECKED BY:	Checker
ISSUE DATE:	12/09/22
SCALE:	As indicated

TITLE:
STAIR 1 - PLANS & SECTIONS

SHEET:
A7.00

PRELIMINARY - Not for Construction -

© 2019 PYATOK ARCHITECTURE & URBAN DESIGN

0' 2' 4' 8' 16'
SCALE: 1/4" = 1'-0"

12/8/2022 6:11:05 PM

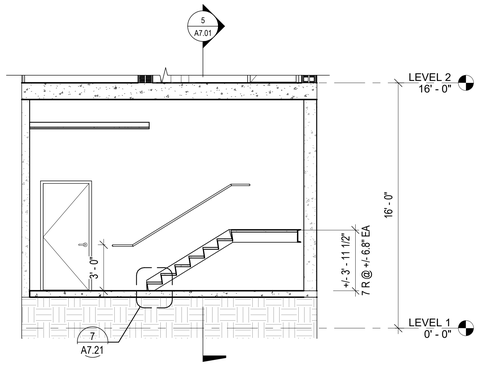

STAIR 2 - SECTION - NORTH/SOUTH (7)
1/4" = 1'-0"

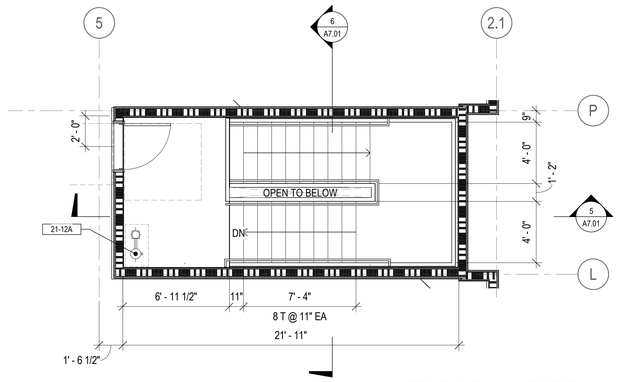

STAIR 2 PLAN - ROOF (8)
1/4" = 1'-0"

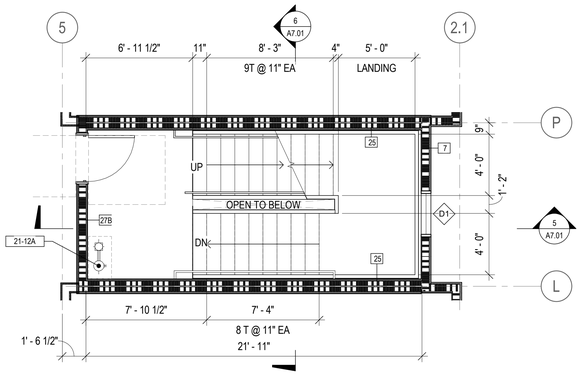

STAIR 2 PLAN - LEVEL 6 (4)
1/4" = 1'-0"

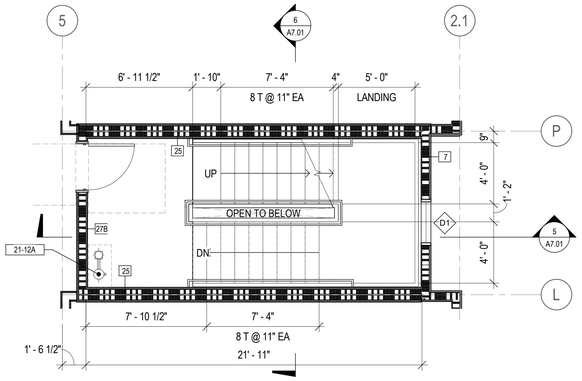

STAIR 2 PLAN - LEVEL 3-5 (3)
1/4" = 1'-0"

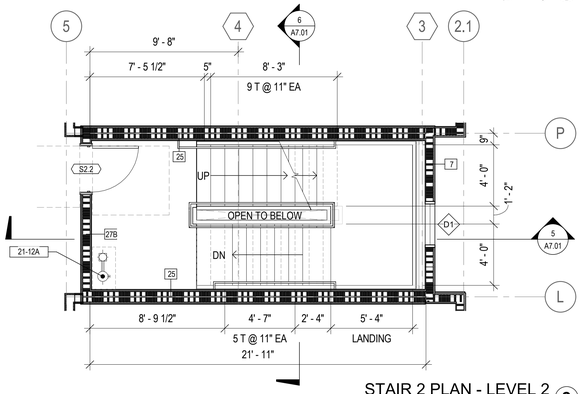

STAIR 2 PLAN - LEVEL 2 (2)
1/4" = 1'-0"

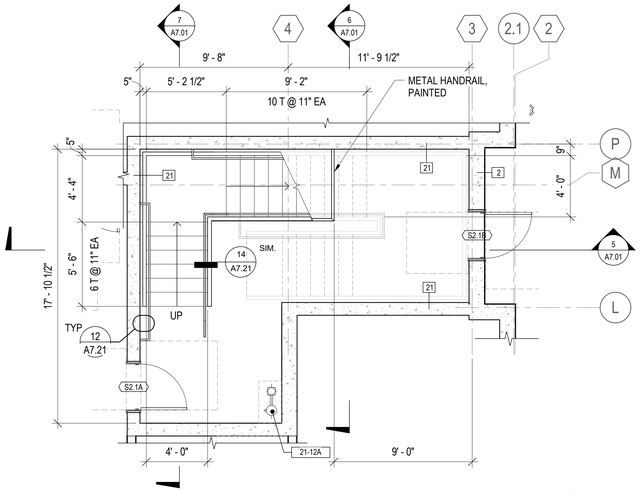

STAIR 2 PLAN - LEVEL 1 (1)
1/4" = 1'-0"

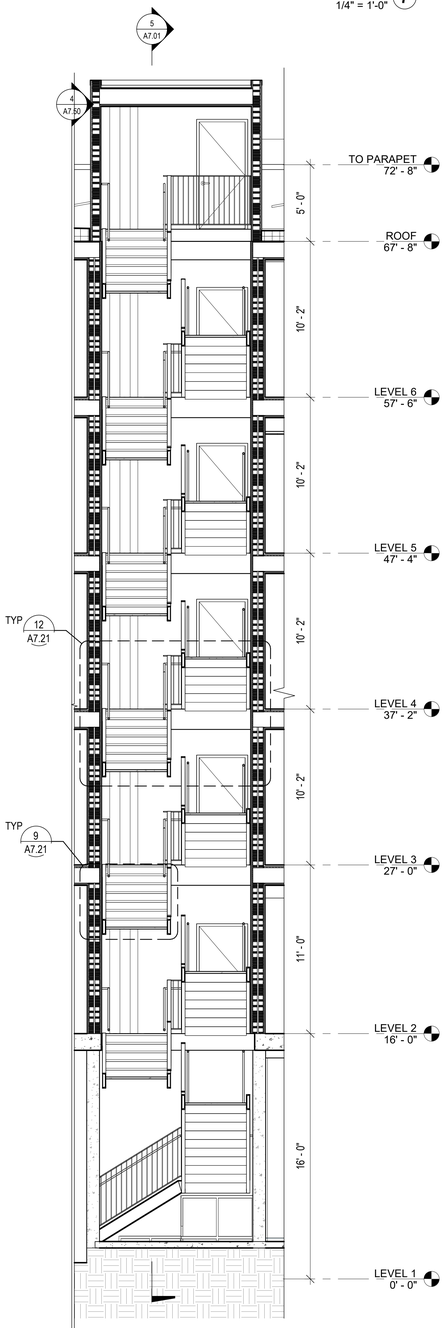

STAIR 2 - SECTION - NORTH/SOUTH (6)
1/4" = 1'-0"

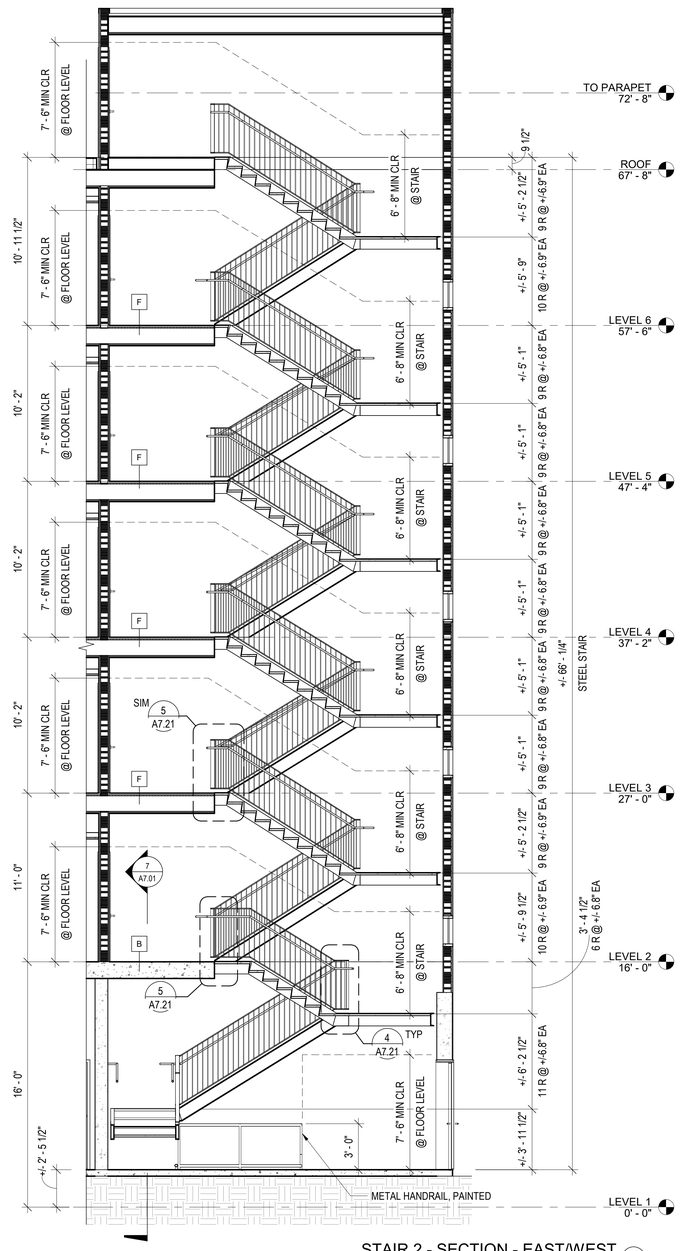

STAIR 2 - SECTION - EAST/WEST (5)
1/4" = 1'-0"

COMMON USE - STAIR GENERAL NOTES

1. SEE STRUCTURAL DRAWINGS FOR FRAMING OF WALLS, ROOF, LANDINGS, FLOORS AND STAIRS.
2. MINIMUM CLEAR HEADROOM 6'-8", MINIMUM CLEAR WIDTH PER CBC REQUIREMENTS
3. PROVIDE CONTINUOUS HANDRAIL 1-1/4" MINIMUM TO 1 1/2" MAXIMUM OUTSIDE DIAMETER AND 1-1/2" MINIMUM CLEAR FROM THE WALL. EXTEND AND RETURN RAIL ENDS PER CBC 11B-505
4. WHERE NEEDED, INTERMEDIATE BALUSTERS SHALL BE SPACED 4" MAXIMUM APART ON CENTER
5. SEE ADDITIONAL INFORMATION ON STAIRWAYS AND HANDRAILS ON SHEET G0.31.

INTERIOR STAIR GENERAL NOTES

1. SEE STRUCTURAL DRAWINGS FOR FRAMING OF WALLS, ROOF, LANDINGS, FLOORS AND STAIRS.

2. HEADROOM 6'-8" MINIMUM CLEAR PER CBC SECTION 1003.3.1. WIDTH 3'-0" MINIMUM CLEAR PER CBC SECTION 1003.3.4.

3. PROVIDE CONTINUOUS HANDRAIL 1-1/2" MINIMUM TO 2" MAXIMUM DIAMETER CROSS-SECTION AND 1-1/2" MINIMUM CLEAR FROM THE WALL. EXTEND AND RETURN RAIL ENDS PER CBC SECTION 1003.3.3.

4. INTERMEDIATE BALUSTERS SHALL BE SPACED 4" MAXIMUM APART ON CENTER PER CBC SECTION 509.3.

5. SEE BARRIER FREE NOTES 3 AND 4 FOR INFORMATION ON LANDINGS AND CLEAR DIMENSIONS.

6. WITHIN INDIVIDUAL DWELLING UNITS, TREADS MINIMUM 10" DEPTH, RISERS 7 3/4" MAXIMUM HEIGHT PER CBC SECTION 1003.5.

7. INSTALL FIRE BLOCKING AT STRINGERS TOP, MIDSPAN, BOTTOM AND AT ADJACENT WALL(S) PER CBC SECTION 708.2.1.

8. PROTECT USABLE SPACE UNDER STAIR WITH TWO (2) LAYERS OF 5/8" TYPE 'X' GYPSUM BOARD PER CBC SECTION 1011.7.3.

KEYNOTE LEGEND	
#	KEYNOTE
21-12A	CLASS I STANDPIPE SYSTEM W/ CANE DETECTION, SEE DEFERRED SUBMITTAL

0' 2' 4' 8' 16'

SCALE: 1/4" = 1'-0"

PYATOK
1611 TELEGRAPH AVE.
SUITE 200
OAKLAND, CA 94612
T. 510.465.7010 | F. 510.465.8575
www.pyatok.com

THE UNITY COUNCIL
1900 FRUITVALE AVE
#2A
OAKLAND, CA 94601

2700 INTERNATIONAL
OAKLAND, CA 94601

STAMP:

LICENSED ARCHITECT
PETER WALLER
C-33554
4/30/2023
STATE OF CALIFORNIA

ISSUE SCHEDULE

100 SD	5/11/22
50 DD	7/15/22
100 DD	9/16/22
50 CD	11/18/22
PERMIT SET	12/09/22

REVISION SCHEDULE

NO.	ISSUE	DATE

JOB NUMBER:	1937
DRAWN BY:	MA, DV, TN, MO, SP
CHECKED BY:	Checker
ISSUE DATE:	12/09/22
SCALE:	As indicated

TITLE:
STAIR 2 - PLANS & SECTIONS

SHEET:
A7.01

PRELIMINARY - Not for Construction -

© 2019 PYATOK ARCHITECTURE & URBAN DESIGN

12/8/2022 6:11:12 PM

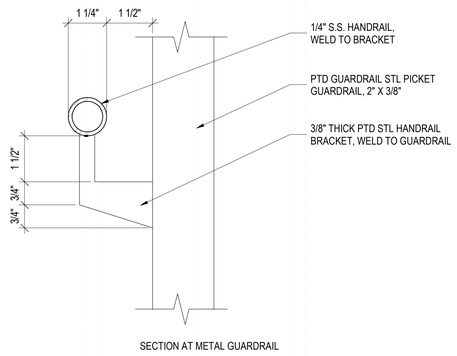

HANDRAIL ATTACHMENT AT GUARDRAIL (14)

6" = 1'-0"

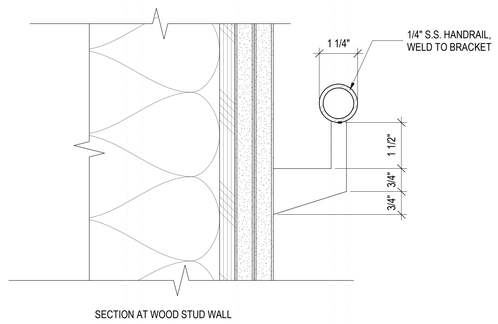

HANDRAIL ATTACHMENT AT STUD WALL (13)

6" = 1'-0"

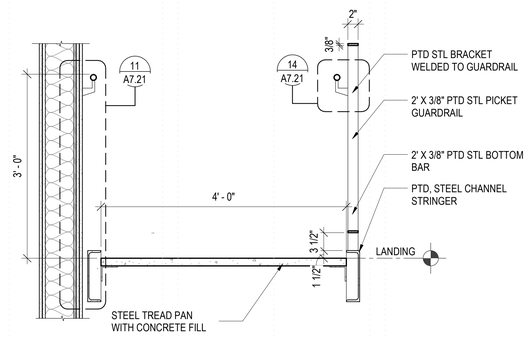

GUARDRAIL AT STRINGER (9)

1" = 1'-0"

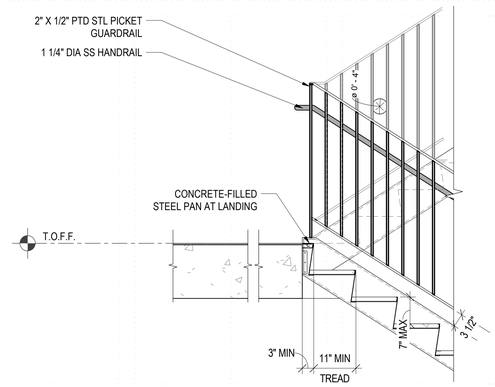

INT STEEL STAIR SECTION AT LANDING DOWN - LEVEL 2 (5)

3/4" = 1'-0"

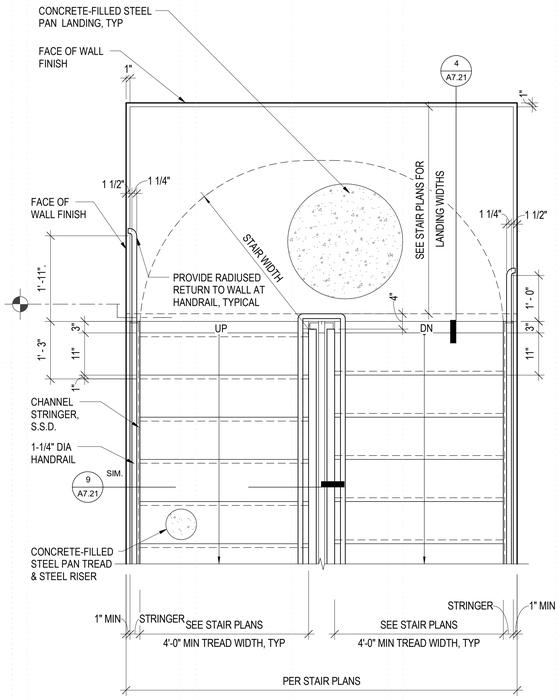

STEEL STAIR AT MID LANDING (2)

3/4" = 1'-0"

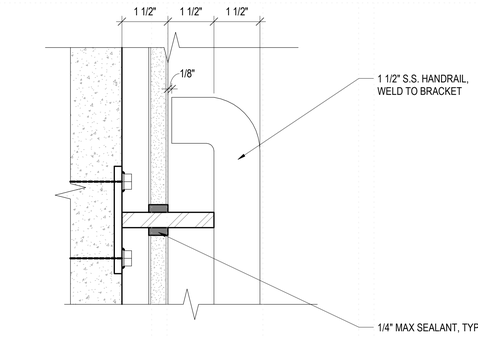

HANDRAIL ATTACHMENT AT CONCRETE WALL (12)

6" = 1'-0"

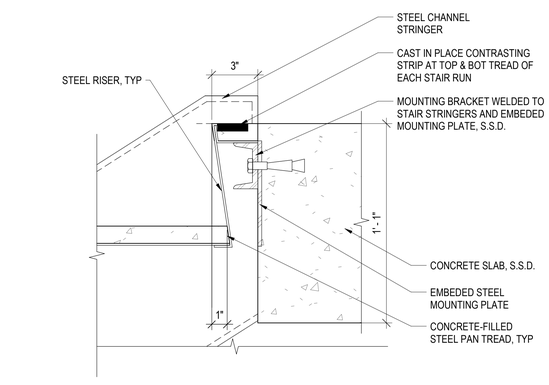

STEEL STAIR AT FLOOR SLAB LANDING (8)

3" = 1'-0"

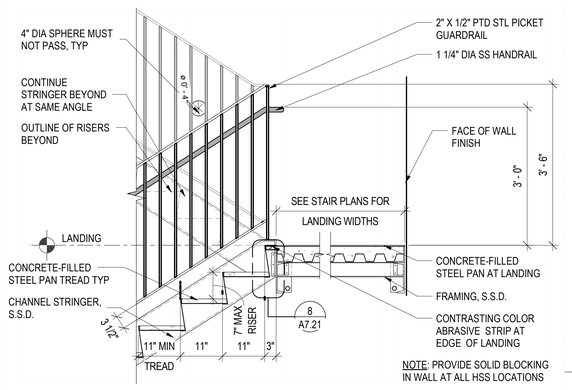

INT STEEL STAIR SECTION INTERMEDIATE LANDING (4)

3/4" = 1'-0"

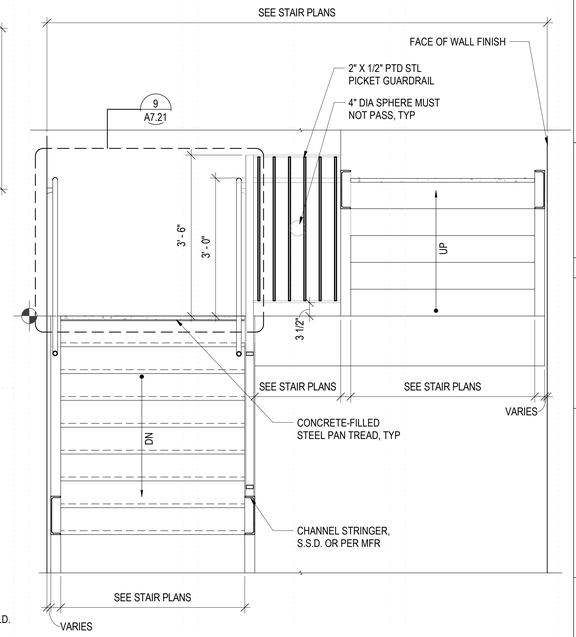

STEEL STAIR SECTION - MIDFLIGHTS AT STAIR 1 (1)

3/4" = 1'-0"

NOTE:
ALL METAL TO BE PRIMED AND PAINTED;
COLOR TO BE SELECTED BY ARCHITECT

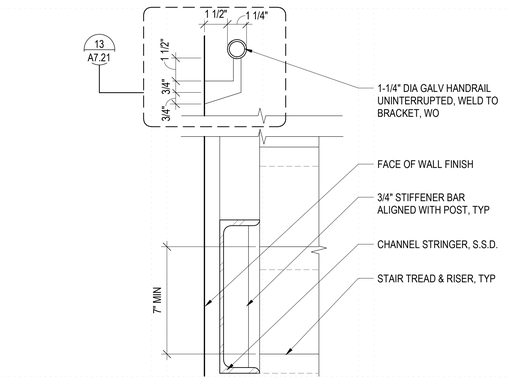

STRINGER & HANDRAIL (11)

3" = 1'-0"

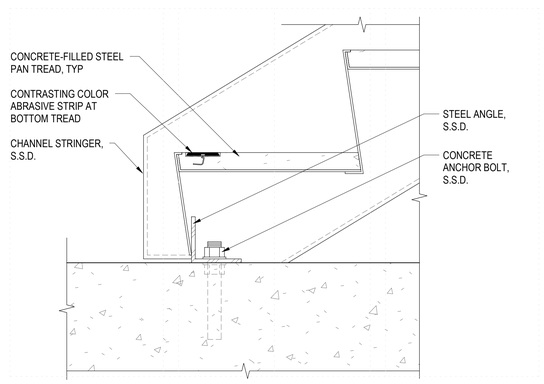

STEEL STAIR AT CONCRETE SLAB (7)

3" = 1'-0"

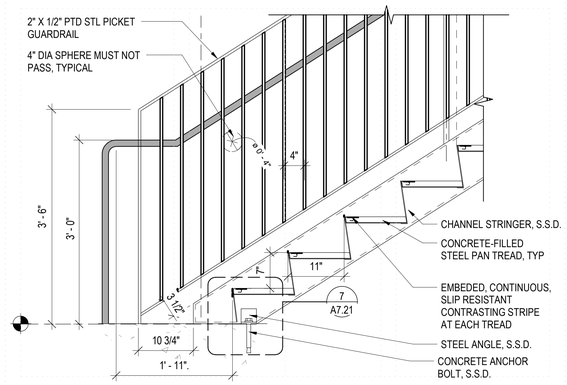

STEEL STAIR AT BOTTOM SLAB (3)

1" = 1'-0"

PYATOK
1611 TELEGRAPH AVE.
SUITE 200
OAKLAND, CA 94612
T. 510.465.7010 | F. 510.465.8575
www.pyatok.com

THE UNITY COUNCIL
1900 FRUITVALE AVE
#2A
OAKLAND, CA 94601

2700 INTERNATIONAL

OAKLAND, CA 94601

STAMP:

LICENSED ARCHITECT — PETER WALLER — C-33554 — 4/30/2023 — STATE OF CALIFORNIA

ISSUE SCHEDULE

100 SD	5/11/22
50 DD	7/15/22
100 DD	9/16/22
50 CD	11/18/22
PERMIT SET	12/09/22

REVISION SCHEDULE

NO.	ISSUE	DATE

JOB NUMBER:	1937
DRAWN BY:	MA, DV, TN, MO, SP
CHECKED BY:	Checker
ISSUE DATE:	12/09/22
SCALE:	As indicated

TITLE:

STAIR DETAILS - METAL

SHEET:

A7.21

PRELIMINARY - Not for Construction -

© 2019 PYATOK ARCHITECTURE & URBAN DESIGN

12/8/2022 6:11:16 PM

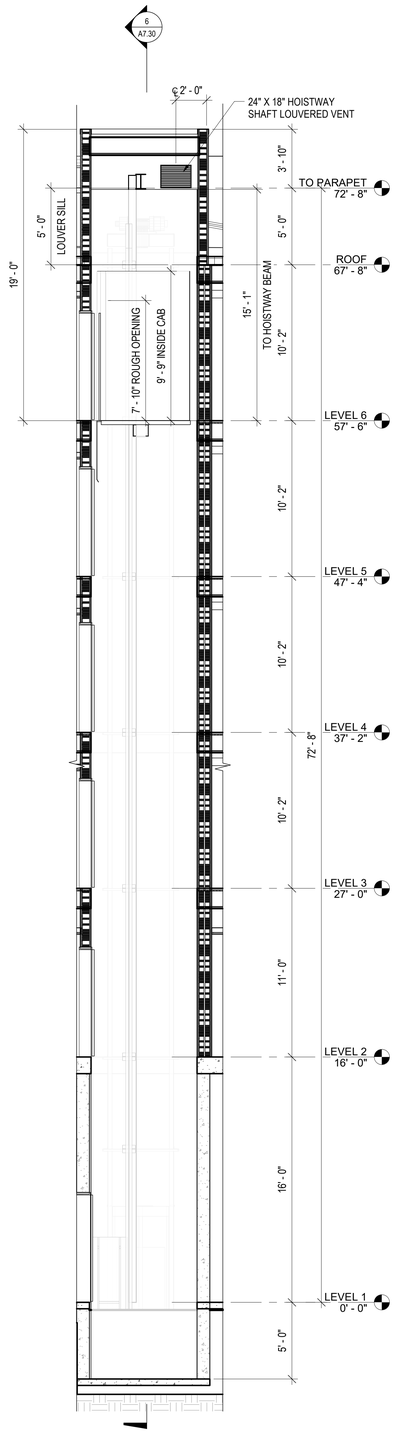

ELEVATOR - SECTION 2 (8)
1/4" = 1'-0"

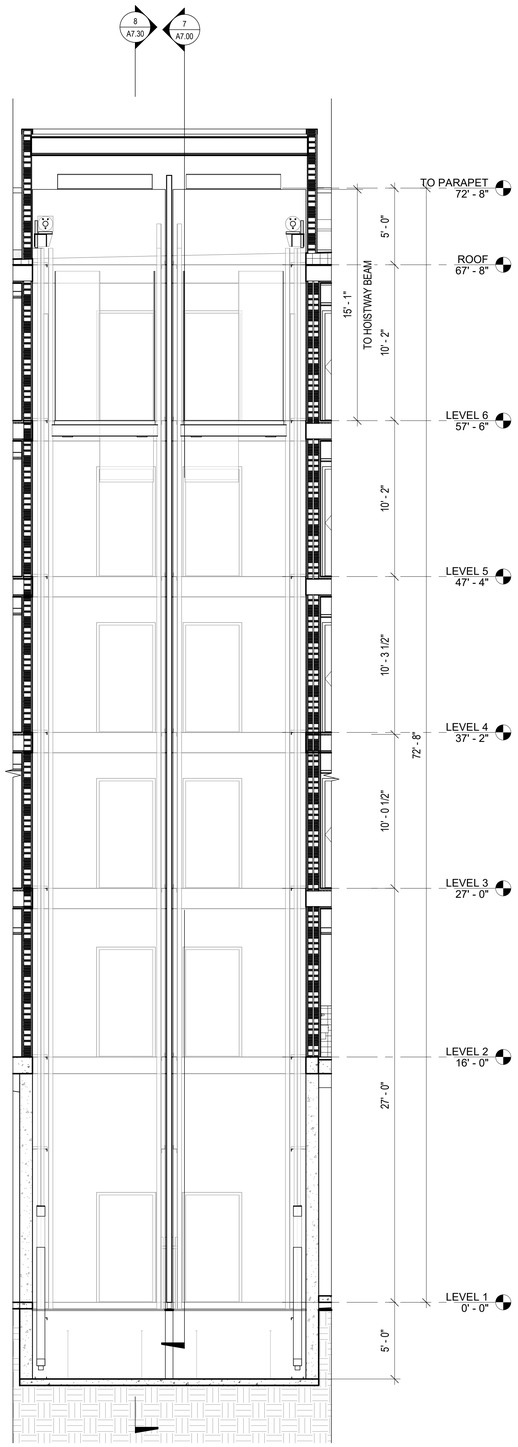

ELEVATOR - SECTION 1 (6)
1/4" = 1'-0"

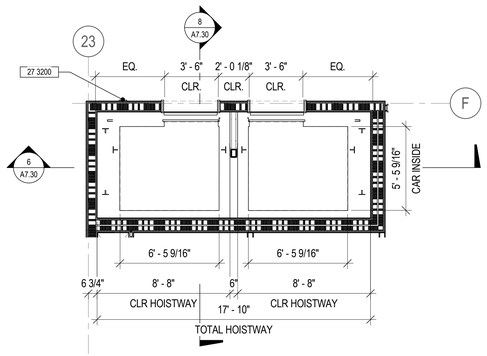

ELEVATOR PLAN - LEVEL 6 (5)
1/4" = 1'-0"

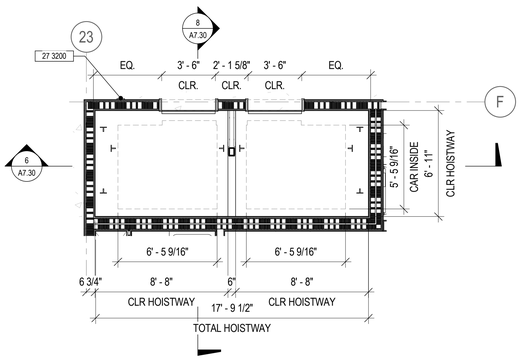

ELEVATOR PLAN - LEVEL 2 (3)
1/4" = 1'-0"

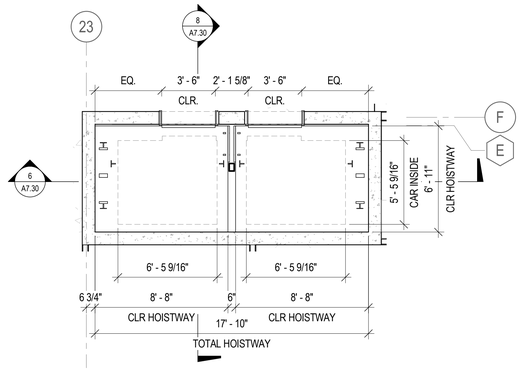

ELEVATOR PLAN - LEVEL 1 (2)
1/4" = 1'-0"

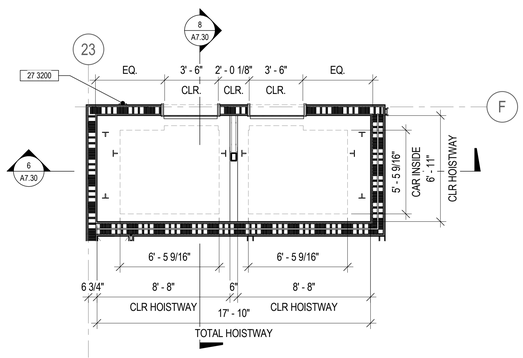

ELEVATOR PLAN - LEVEL 3 (4)
1/4" = 1'-0"

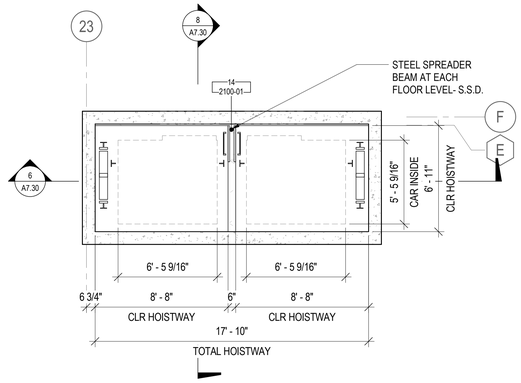

ELEVATOR PIT PLAN - PIT (1)
1/4" = 1'-0"

ELEVATOR GENERAL NOTES

1. PROVIDE 2-HOUR CONSTRUCTION FOR ALL WALLS AT ELEVATOR SHAFT. REFER TO PLAN FOR WALL TYPES.
2. ALL PASSENGER ELEVATORS SHALL COMPLY WITH CBC 1009 AND 11B-407 AND CHAPTER 30.
3. MACHINE ROOMS TO COMPLY WITH SECTION 3005.
4. TO COMPLY WITH CBC SECTION 3006 FOR ELEVATOR LOBBIES AND HOISTWAY OPENING PROTECTION, PROVIDE SMOKE DOOR ON HOLD-OPENS TIED TO FIRE ALARM AT ALL LEVELS ABOVE THE EXITING LEVEL (GROUND FLOOR) CBC 3006.3.3.
5. AUDIBLE FIRE ALARMS TO COMPLY WITH SECTION 907.5.2.1 AND NFPA 72.
6. ELEVATOR HOISTWAYS THAT PENETRATE MORE THAN 3 STORIES SHALL BE VENTED TO THE OUTSIDE. THE AREA OF THE VENT SHALL NOT BE LESS THAN 3.5% OF THE ELEVATOR HOISTWAY AREA, WITH A MINIMUM OF 3 SF PER ELEVATOR CAR, PER CBC 3004.
7. ELEVATOR LOBBY SEPARATIONS TO COMPLY WITH SECTION 3006.2.
8. PROVIDE AN APPROVED, LISTED, SMOKE DETECTOR FOR ELEVATOR RECALL PURPOSE ONLY IN ACCORDANCE WITH THE CBC SECTION 30.
9. FOR CONCRETE SLAB FOUNDATIONS AND FRAMING, SEE STRUCTURAL DRAWINGS.
10. AT LEAST ONE ELEVATOR SHALL BE SIZED TO ACCOMMODATE A GURNEY THAT IS 24 INCHES BY 84 INCHES (WITH A MINIMUM 5 INCH RADIUS CORNERS). THE ELEVATOR ENTRANCE SHALL HAVE A CLEAR ENTRANCE OF NOT LESS THAN 42" WIDE BY 78 INCHES HIGH. THE ELEVATOR CAR SHALL HAVE A MINIMUM CLEAR DISTANCE BETWEEN WALLS OR BETWEEN WALLS AND DOOR EXCLUDING RETURN PANELS OF NOT LESS THAN 80 INCHES BY 65 INCHES.
11. PROVIDE APPROVED 1-HOUR FIRE-RATED ASSEMBLY AT POSTS, BEAMS AND HANGERS AS REQUIRED FOR INDIVIDUAL FIRE PROTECTION REQUIRED BY CBC. SEE STRUCTURAL DRAWINGS FOR POST AND BEAM LOCATION AND SIZE.
12. PROVIDE TWO-WAY COMMUNICATION SYSTEM IN ACCORDANCE WITH CBC 1007.8.
13. VERIFY LOCATIONS, DIMENSIONS AND CONSTRUCTION OF SUMP, PIT LADDER, CONVEYANCE OUTLET AND LIGHT WITH ELEVATOR MANUFACTURER PRIOR TO INSTALLATION.

KEYNOTE LEGEND	
#	KEYNOTE
14 2100-01	ELECTRIC TRACTION ELEVATOR, 3500 LBS, 350 FPM, FRONT AND REAR DOOR, MACHINE ROOM LESS
27 3200	TWO-WAY COMMUNICATION SYSTEM

0' 2' 4' 8' 16'

SCALE: 1/4" = 1'-0"

PYATOK
1611 TELEGRAPH AVE.
SUITE 200
OAKLAND, CA 94612
T. 510.465.7010 | F. 510.465.8575
www.pyatok.com

THE UNITY COUNCIL
1900 FRUITVALE AVE
#2A
OAKLAND, CA 94601

2700 INTERNATIONAL

OAKLAND, CA 94601

STAMP:

LICENSED ARCHITECT
PETER WALLER
4/30/2023
STATE OF CALIFORNIA

ISSUE SCHEDULE

100 SD	5/11/22
50 DD	7/15/22
100 DD	9/16/22
50 CD	11/18/22
PERMIT SET	12/09/22

REVISION SCHEDULE

NO.	ISSUE	DATE

JOB NUMBER:	1937
DRAWN BY:	MA, DV, TN, MO, SP
CHECKED BY:	Checker
ISSUE DATE:	12/09/22
SCALE:	As indicated

TITLE:

ELEVATOR - PLANS & SECTIONS

SHEET:

A7.30

PRELIMINARY - Not for Construction -

© 2019 PYATOK ARCHITECTURE & URBAN DESIGN

12/8/2022 6:11:23 PM

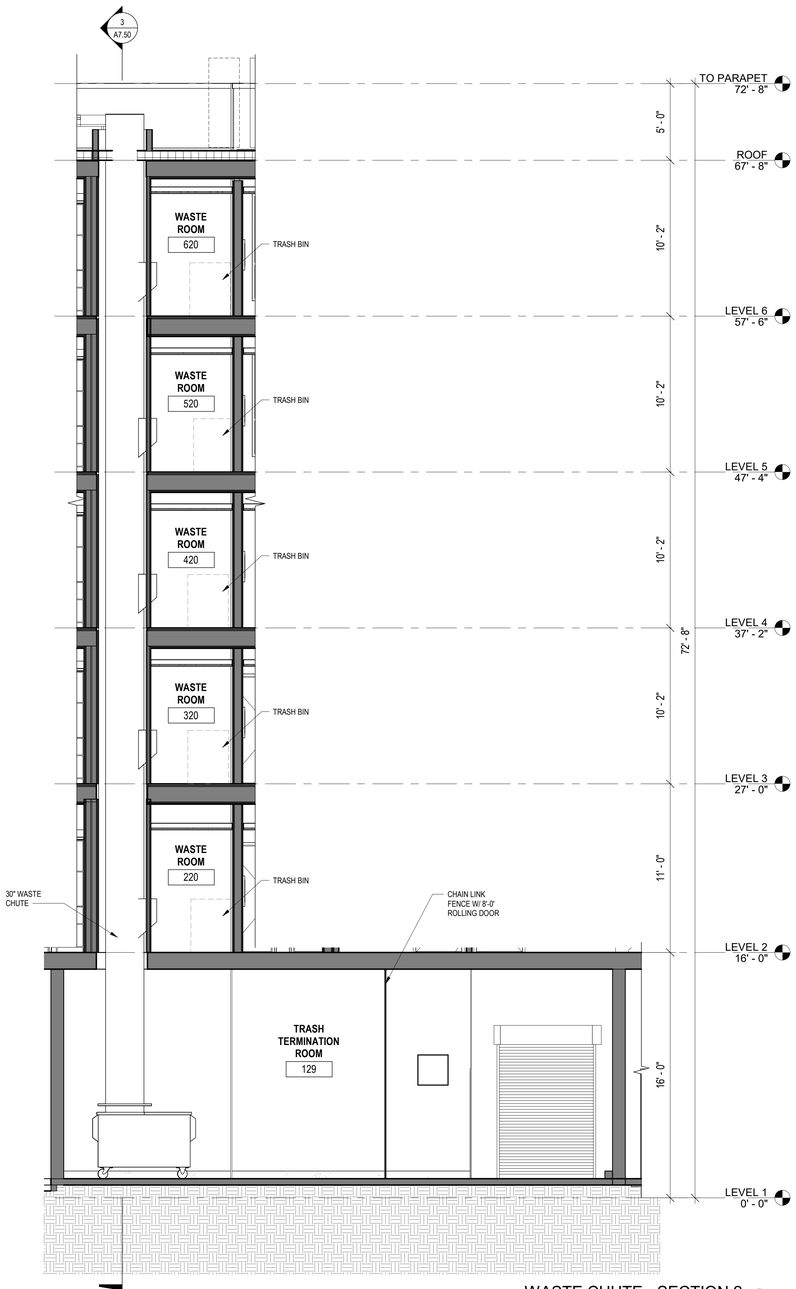

WASTE CHUTE - SECTION 2 (4)
1/4" = 1'-0"

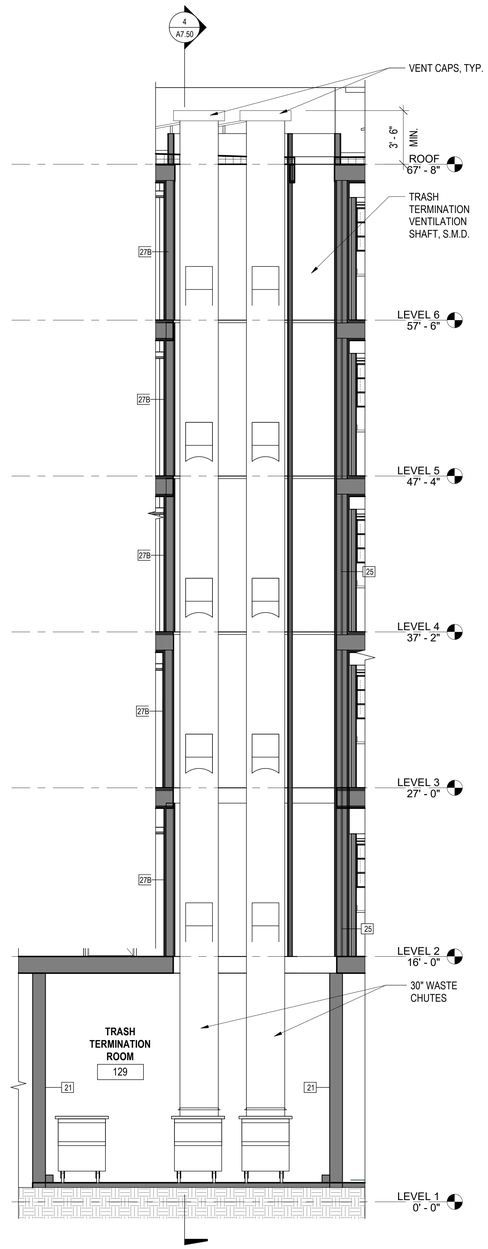

WASTE CHUTE - SECTION 1 (3)
1/4" = 1'-0"

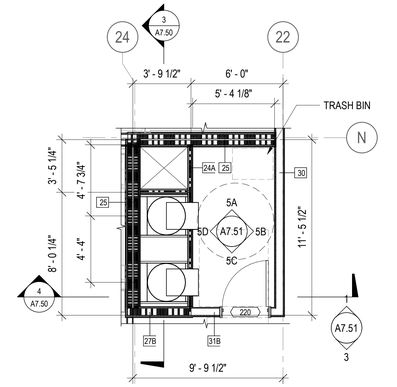

ENLARGED PLAN - TYP. WASTE ROOM (2)
1/4" = 1'-0"

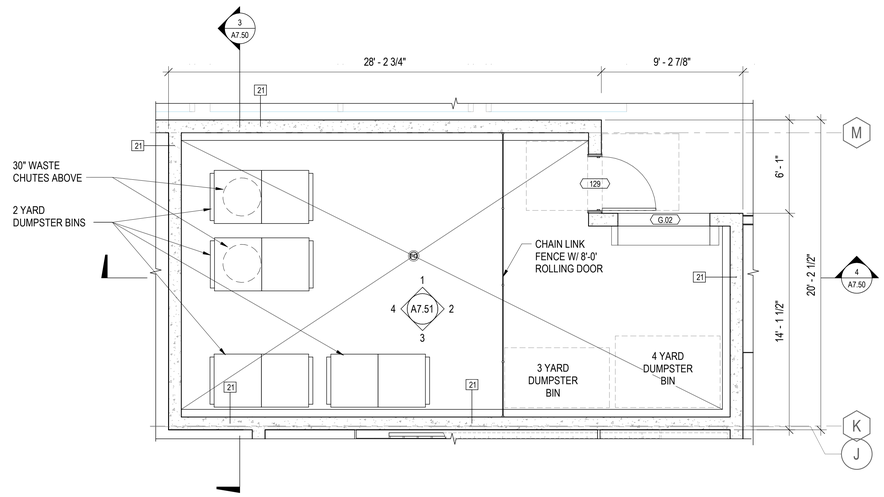

ENLARGED PLAN - WASTE TERMINATION ROOM (1)
1/4" = 1'-0"

PYATOK
1611 TELEGRAPH AVE.
SUITE 200
OAKLAND, CA 94612
T. 510.465.7010 | F. 510.465.8575
www.pyatok.com

THE UNITY COUNCIL
1900 FRUITVALE AVE
#2A
OAKLAND, CA 94601

2700 INTERNATIONAL
OAKLAND, CA 94601

STAMP:

PETER WALLER
LICENSED ARCHITECT
4/30/2023
STATE OF CALIFORNIA

ISSUE SCHEDULE

100 SD	5/11/22
50 DD	7/15/22
100 DD	9/16/22
50 CD	11/18/22
PERMIT SET	12/09/22

REVISION SCHEDULE

NO.	ISSUE	DATE

JOB NUMBER:	1937
DRAWN BY:	MA, DV, TN, MO, SP
CHECKED BY:	Checker
ISSUE DATE:	12/09/22
SCALE:	1/4" = 1'-0"

TITLE:
WASTE TERMINATION - PLANS, SECTIONS

SHEET:
A7.50

PRELIMINARY - Not for Construction -

© 2019 PYATOK ARCHITECTURE & URBAN DESIGN

12/8/2022 6:11:27 PM

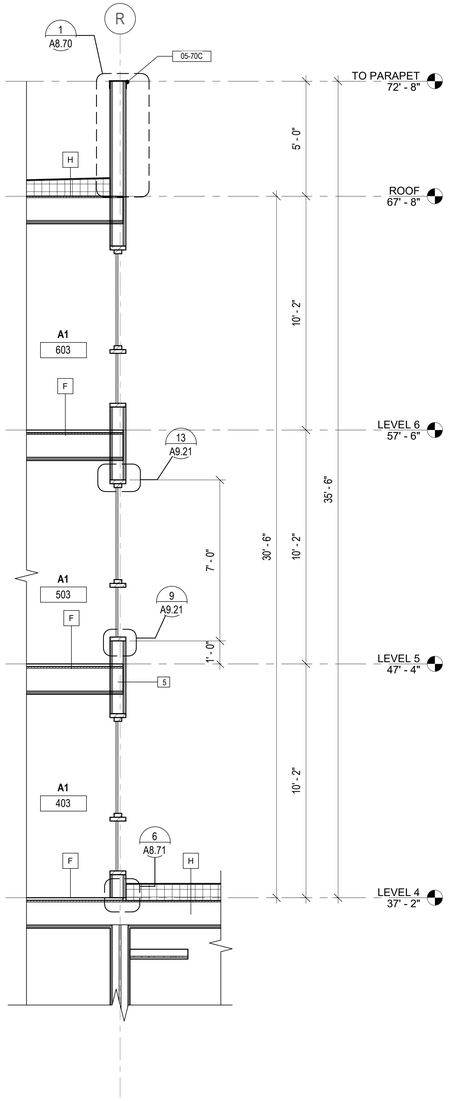

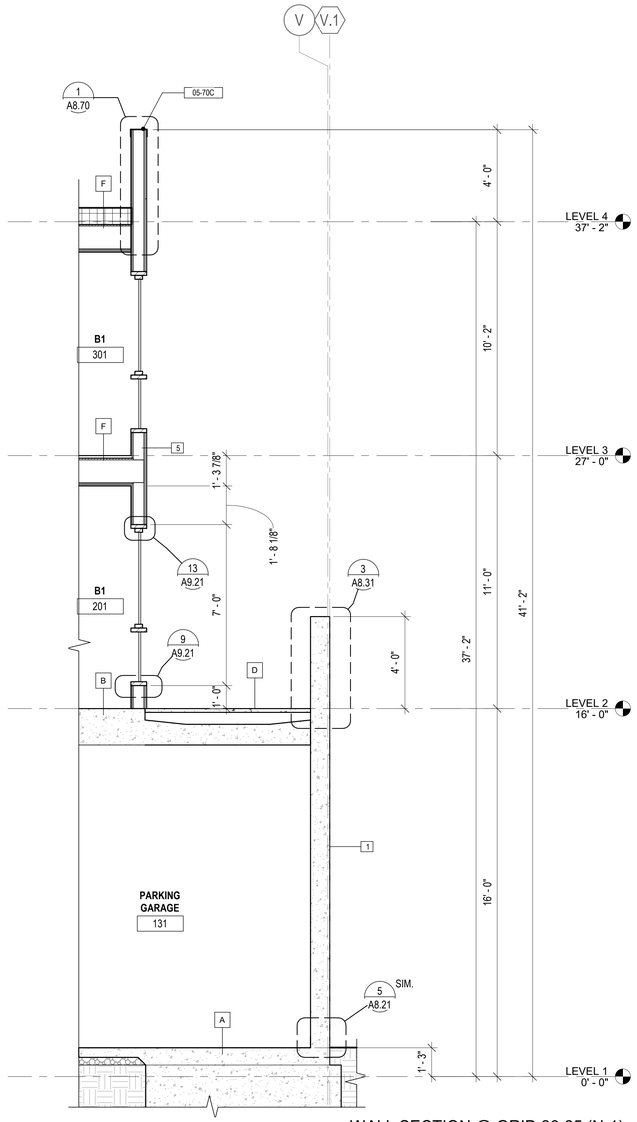

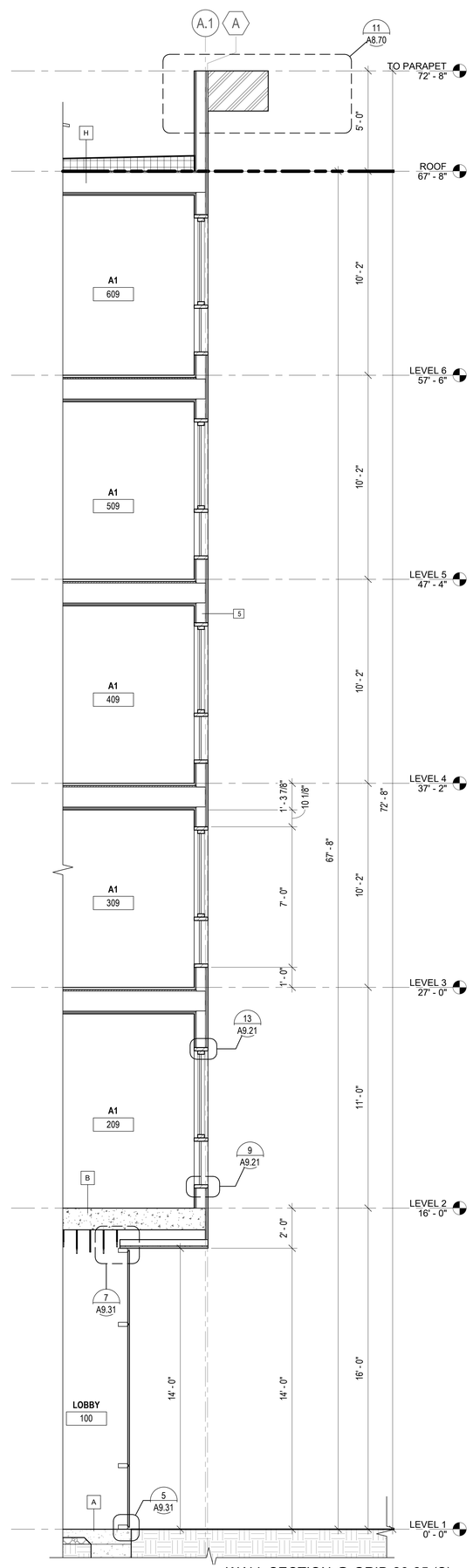

WALL SECTION GENERAL NOTES

1. FOR WALL ASSEMBLY LOCATIONS, SEE BUILDING AND UNIT FLOOR PLANS, SHEET SERIES A2.01-2.07 AND A4.01-4.11 RESPECTIVELY. FOR WALL ASSEMBLY TYPES, SEE SHEETS A9.00-9.01.
2. FOR FLOOR/CEILING ASSEMBLY LOCATIONS SEE BUILDING SECTIONS, SHEET SERIES A3.20-3.22 AND A8.01-8.04. FOR FLOOR/ASSEMBLY TYPES, SEE SHEET A9.05.
3. FOR ROOF/CEILING ASSEMBLY LOCATIONS, SEE BUILDING SECTIONS, SHEET SERIES A3.20-3.22 AND A8.01-8.04. FOR ROOF/CEILING ASSEMBLY TYPES, SEE SHEET A9.05.
4. SEE STRUCTURAL DRAWINGS FOR FOUNDATION INFORMATION AND RELATED STRUCTURAL INFORMATION.
5. SEE ROOF PLAN, SHEET A2.07, FOR PARAPET HEIGHTS, SLOPES, VENTILATION, ETC.

KEYNOTE LEGEND	
#	KEYNOTE
05-70C	METAL PANEL FASCIA

WALL SECTION @ GRID 26-25 (N-2) 3
3/8" = 1'-0"

WALL SECTION @ GRID 26-25 (N-1) 2
3/8" = 1'-0"

WALL SECTION @ GRID 26-25 (S) 1
3/8" = 1'-0"

0' 2' 4' 8' 16'
SCALE: 1/4" = 1'-0"

PYATOK
1611 TELEGRAPH AVE.
SUITE 200
OAKLAND, CA 94612
T. 510.465.7010 | F. 510.465.8575
www.pyatok.com

THE UNITY COUNCIL
1900 FRUITVALE AVE
#2A
OAKLAND, CA 94601

2700 INTERNATIONAL
OAKLAND, CA 94601

STAMP:
LICENSED ARCHITECT
PETER WALLER
C-23557
RENEWAL DATE
4/30/2023
STATE OF CALIFORNIA

ISSUE SCHEDULE

100 SD	5/11/22
50 DD	7/15/22
100 DD	9/16/22
50 CD	11/18/22
PERMIT SET	12/09/22

REVISION SCHEDULE

NO.	ISSUE	DATE

JOB NUMBER:	1937
DRAWN BY:	MA, DV, TN, MO, SP
CHECKED BY:	Checker
ISSUE DATE:	12/09/22
SCALE:	As indicated

TITLE:
WALL SECTIONS

SHEET:
A8.00

PRELIMINARY - Not for Construction -

© 2019 PYATOK ARCHITECTURE & URBAN DESIGN

12/8/2022 6:11:32 PM

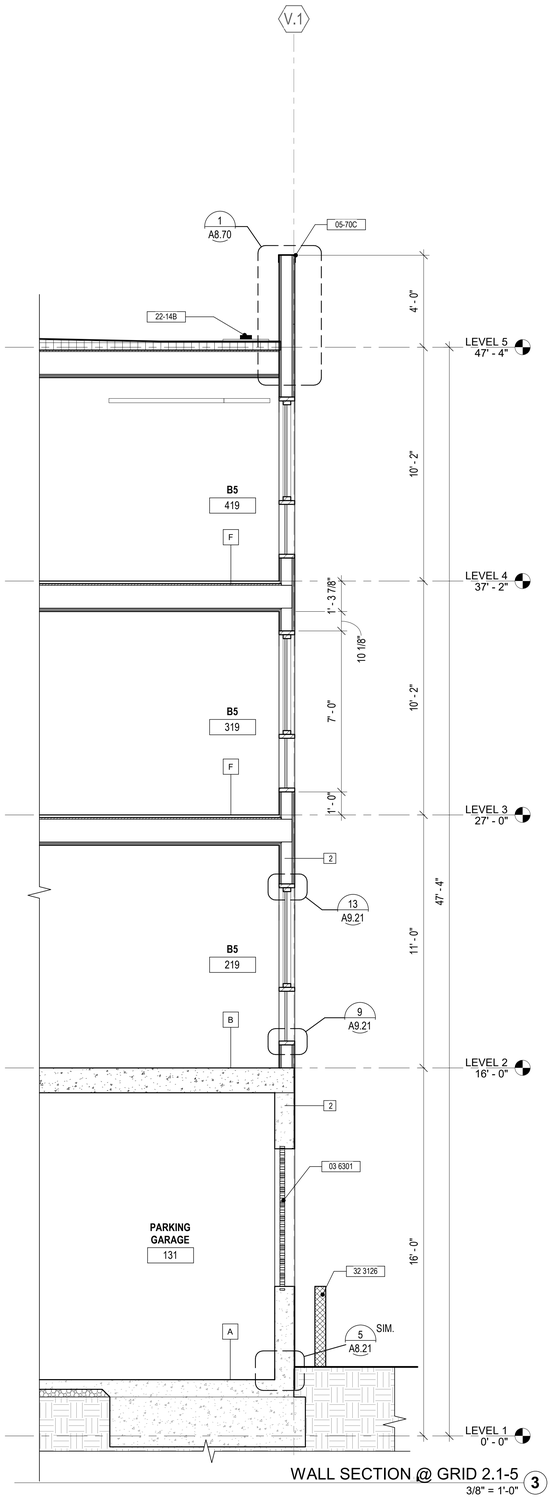

WALL SECTION @ GRID 2.1-5 (3)
3/8" = 1'-0"

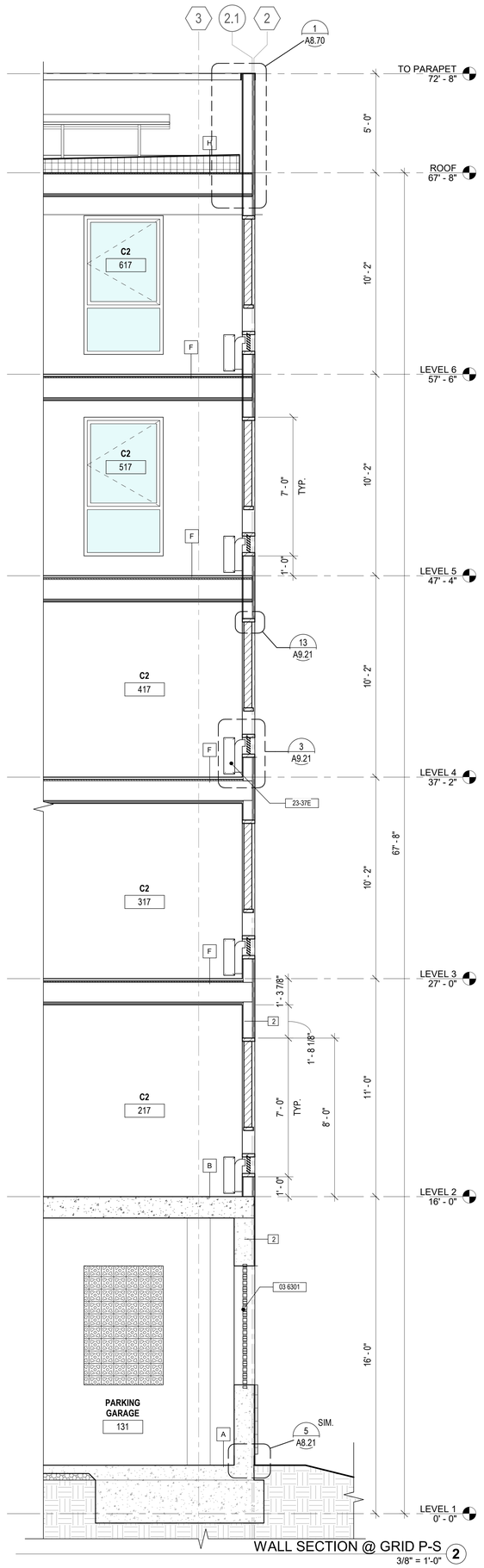

WALL SECTION @ GRID P-S (2)
3/8" = 1'-0"

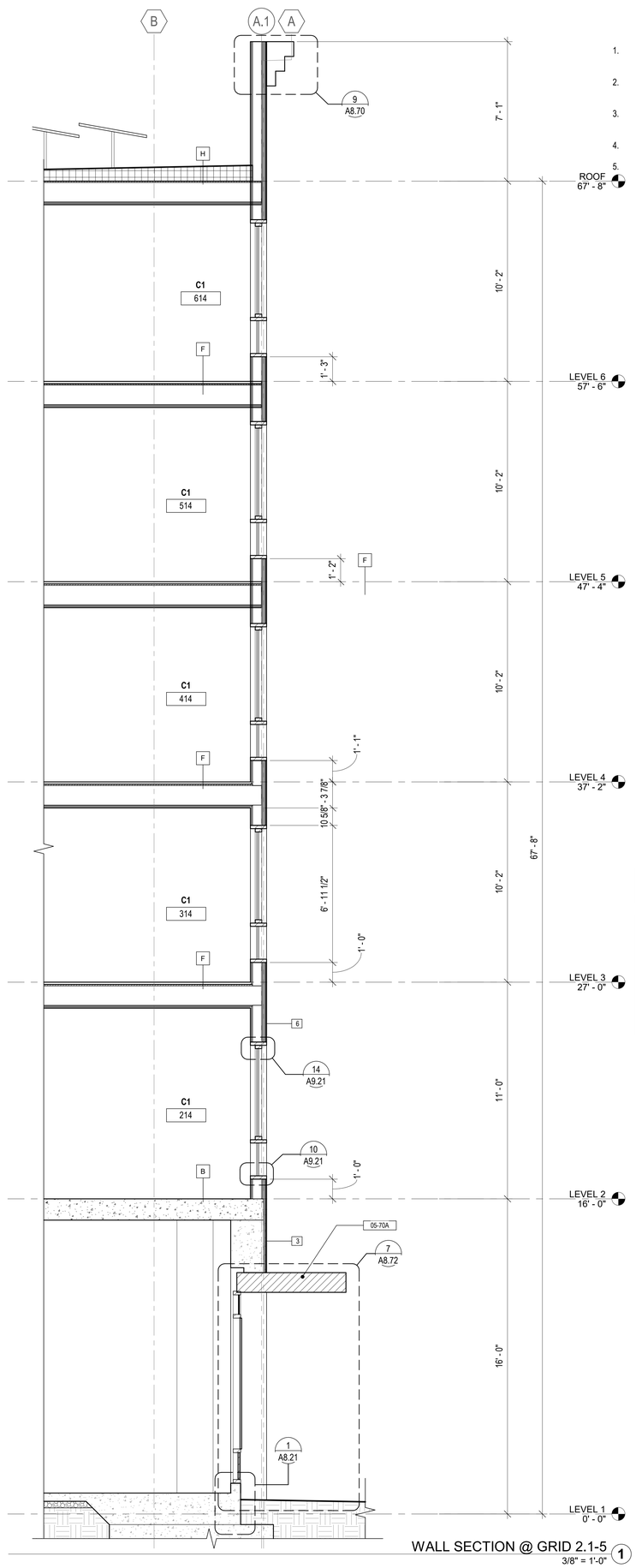

WALL SECTION @ GRID 2.1-5 (1)
3/8" = 1'-0"

WALL SECTION GENERAL NOTES

1. FOR WALL ASSEMBLY LOCATIONS, SEE BUILDING AND UNIT FLOOR PLANS, SHEET SERIES A2.01-2.07 AND A4.01-4.11 RESPECTIVELY. FOR WALL ASSEMBLY TYPES, SEE SHEETS A9.00-9.01.
2. FOR FLOOR/CEILING ASSEMBLY LOCATIONS SEE BUILDING SECTIONS, SHEET SERIES A3.20-3.22 AND A8.01-8.04. FOR FLOOR/ASSEMBLY TYPES, SEE SHEET A9.05.
3. FOR ROOF/CEILING ASSEMBLY LOCATIONS, SEE BUILDING SECTIONS, SHEET SERIES A3.20-3.22 AND A8.01-8.04. FOR ROOF/CEILING ASSEMBLY TYPES, SEE SHEET A9.05.
4. SEE STRUCTURAL DRAWINGS FOR FOUNDATION INFORMATION AND RELATED STRUCTURAL INFORMATION.
5. SEE ROOF PLAN, SHEET A2.07, FOR PARAPET HEIGHTS, SLOPES, VENTILATION, ETC.

KEYNOTE LEGEND

#	KEYNOTE
03 6301	CONCRETE BREEZE BLOCK, PAINTED TO MATCH ADJACENT CEMENT PLASTER
05-70A	AWNING, DARK METAL FASCIA
05-70C	METAL PANEL FASCIA
22-14B	ROOF DRAIN W/ OVERFLOW, S.P.D.
23-37E	THROUGH-WALL HEAT PUMP HEATING / COOLING UNIT W/ LOUVERED VENT HOLES TO EXTERIOR, OCCURS AT EACH RESIDENTIAL UNIT LIVING & BEDROOM, LOUVERED GRILLE WHERE SHOWN, S.M.D.
32 3126	CONCRETE PLANTER, S.L.D.

0' 2' 4' 8' 16'

SCALE: 1/4" = 1'-0"

PYATOK
1611 TELEGRAPH AVE.
SUITE 200
OAKLAND, CA 94612
T. 510.465.7010 | F. 510.465.8575
www.pyatok.com

THE UNITY COUNCIL
1900 FRUITVALE AVE
#2A
OAKLAND, CA 94601

2700 INTERNATIONAL
OAKLAND, CA 94601

STAMP:
LICENSED ARCHITECT
PETER WALLER
STATE OF CALIFORNIA

ISSUE SCHEDULE

100 SD	5/11/22
50 DD	7/15/22
100 DD	9/16/22
50 CD	11/18/22
PERMIT SET	12/09/22

REVISION SCHEDULE

NO.	ISSUE	DATE

JOB NUMBER:	1937
DRAWN BY:	MA, DV, TN, MO, SP
CHECKED BY:	Checker
ISSUE DATE:	12/09/22
SCALE:	As indicated

TITLE:
WALL SECTIONS

SHEET:
A8.01

PRELIMINARY - Not for Construction -

© 2019 PYATOK ARCHITECTURE & URBAN DESIGN

12/8/2022 6:11:37 PM

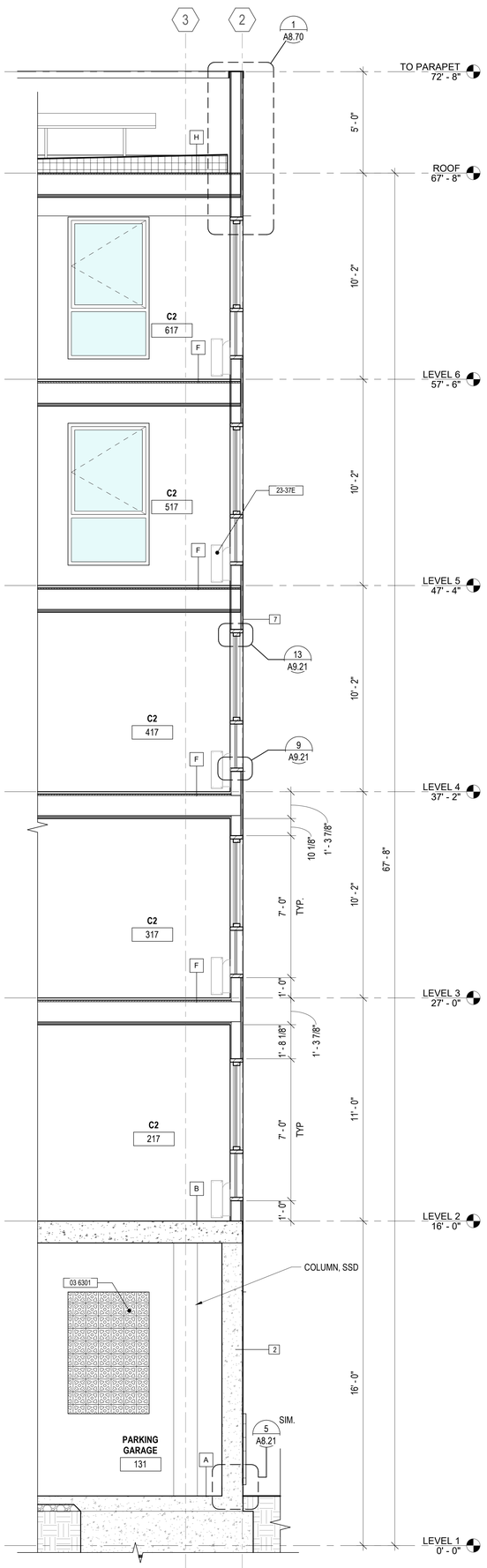

WALL SECTION @ GRID P-S (3)
3/8" = 1'-0"

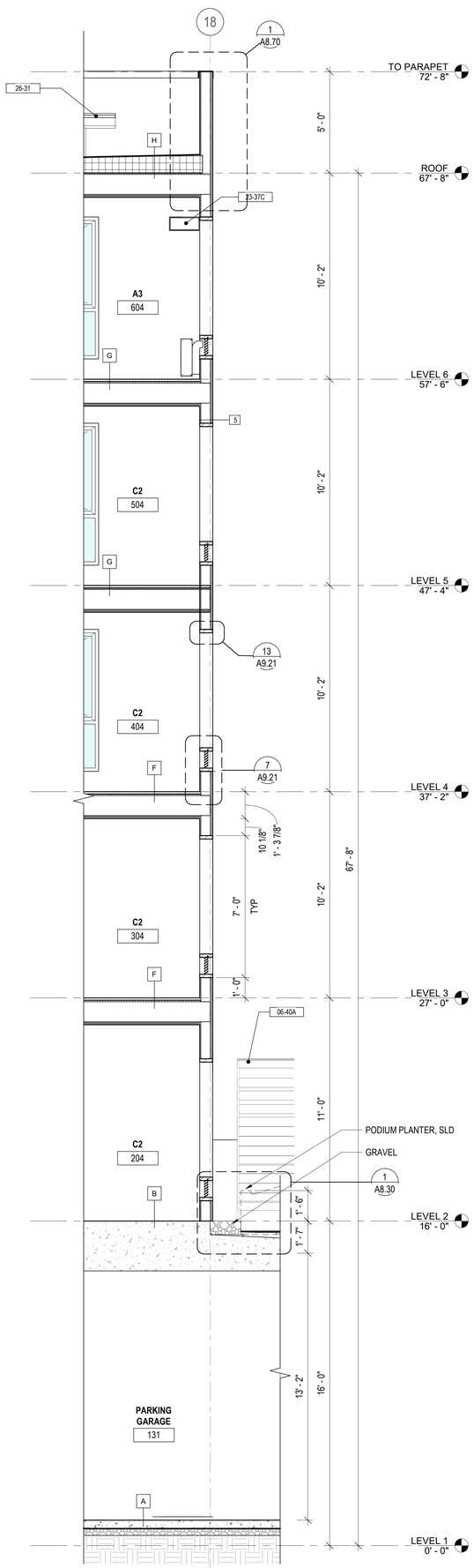

WALL SECTION @ GRID N-R (2)
3/8" = 1'-0"

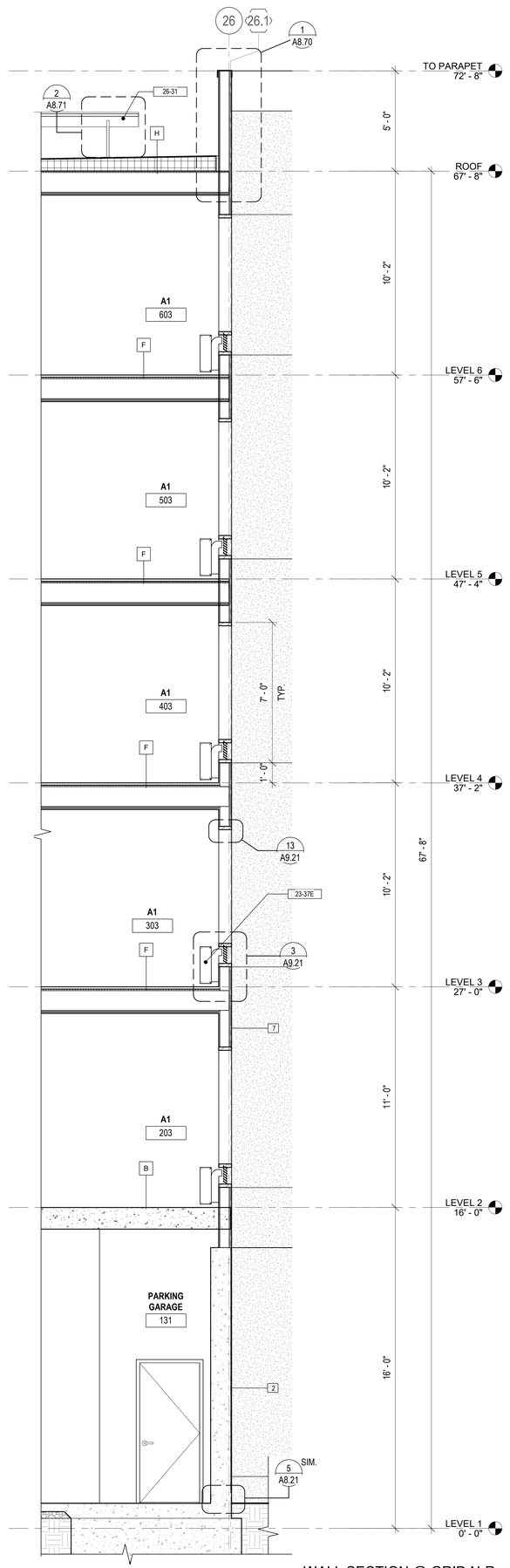

WALL SECTION @ GRID N-R (1)
3/8" = 1'-0"

WALL SECTION GENERAL NOTES

1. FOR WALL ASSEMBLY LOCATIONS, SEE BUILDING AND UNIT FLOOR PLANS, SHEET SERIES A2.01-2.07 AND A4.01-4.11 RESPECTIVELY. FOR WALL ASSEMBLY TYPES, SEE SHEETS A9.00-9.01.
2. FOR FLOOR/CEILING ASSEMBLY LOCATIONS SEE BUILDING SECTIONS, SHEET SERIES A3.20-3.22 AND A8.01-8.04. FOR FLOOR/ASSEMBLY TYPES, SEE SHEET A9.05.
3. FOR ROOF/CEILING ASSEMBLY LOCATIONS, SEE BUILDING SECTIONS, SHEET SERIES A3.20-3.22 AND A8.01-8.04. FOR ROOF/CEILING ASSEMBLY TYPES, SEE SHEET A9.05.
4. SEE STRUCTURAL DRAWINGS FOR FOUNDATION INFORMATION AND RELATED STRUCTURAL INFORMATION.
5. SEE ROOF PLAN, SHEET A2.07, FOR PARAPET HEIGHTS, SLOPES, VENTILATION, ETC.

KEYNOTE LEGEND

#	KEYNOTE
03 6301	CONCRETE BREEZE BLOCK, PAINTED TO MATCH ADJACENT CEMENT PLASTER
06-40A	TRELLIS, S.L.D.
23-37C	MECHANICAL LOUVER, S.M.D.
23-37E	THROUGH-WALL HEAT PUMP HEATING / COOLING UNIT W/ LOUVERED VENT HOLES TO EXTERIOR, OCCURS AT EACH RESIDENTIAL UNIT LIVING & BEDROOM, LOUVERED GRILLE WHERE SHOWN, S.M.D.
26-31	PHOTOVOLTAIC PANELS

0' 2' 4' 8' 16'
SCALE: 1/4" = 1'-0"

PYATOK
1611 TELEGRAPH AVE.
SUITE 200
OAKLAND, CA 94612
T. 510.465.7010 | F. 510.465.8575
www.pyatok.com

THE UNITY COUNCIL
1900 FRUITVALE AVE
#2A
OAKLAND, CA 94601

2700 INTERNATIONAL
OAKLAND, CA 94601

STAMP:
LICENSED ARCHITECT
PETER WALLER
C-23554
4/30/2023
STATE OF CALIFORNIA

ISSUE SCHEDULE

100 SD	5/11/22
50 DD	7/15/22
100 DD	9/16/22
50 CD	11/18/22
PERMIT SET	12/09/22

REVISION SCHEDULE

NO.	ISSUE	DATE

JOB NUMBER:	1937
DRAWN BY:	MA, DV, TN, MO, SP
CHECKED BY:	Checker
ISSUE DATE:	12/09/22
SCALE:	As indicated

TITLE:
WALL SECTIONS

SHEET:
A8.02

PRELIMINARY - Not for Construction -

© 2019 PYATOK ARCHITECTURE & URBAN DESIGN

12/8/2022 6:11:43 PM

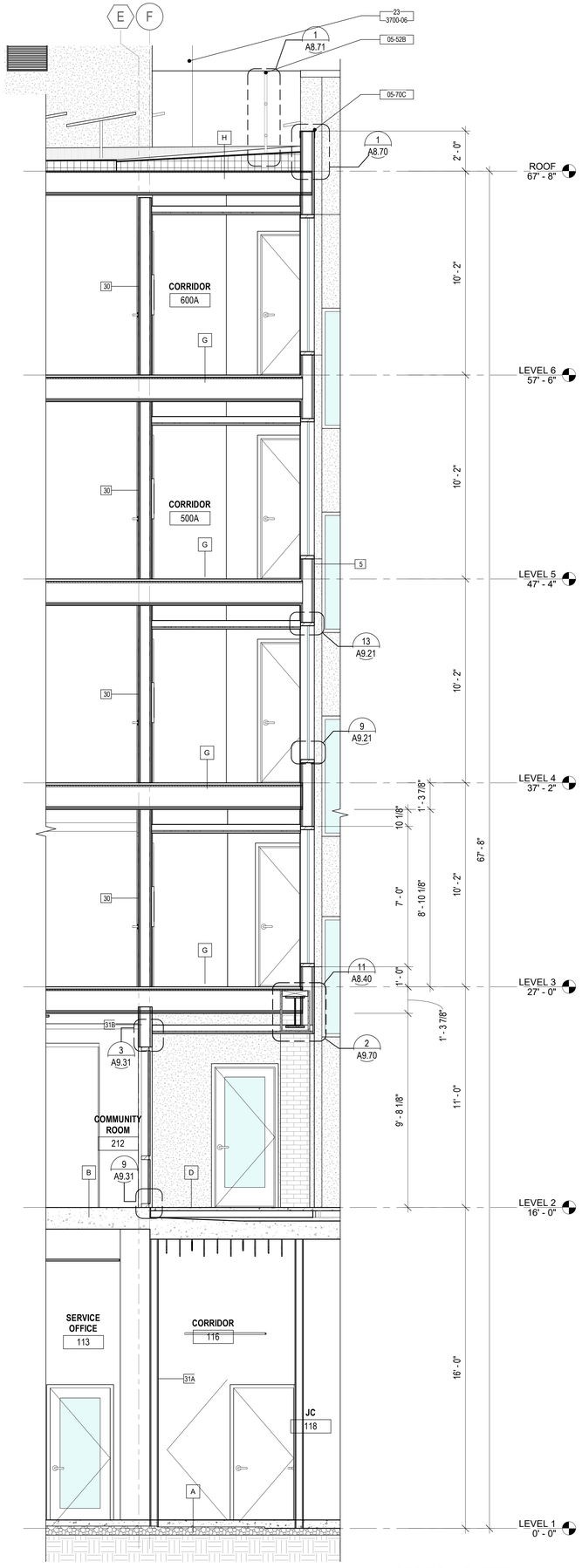

WALL SECTION @ GRID 14-17 (2)
3/8" = 1'-0"

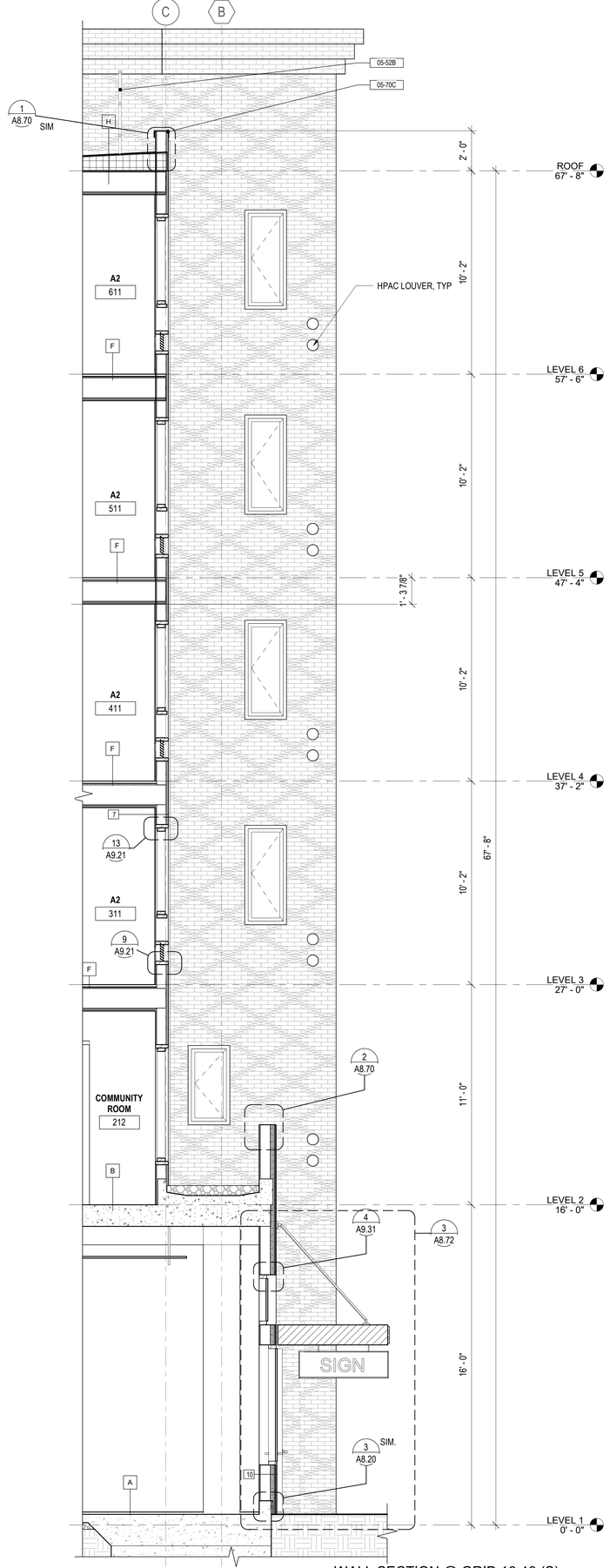

WALL SECTION @ GRID 16-13 (S) (1)
3/8" = 1'-0"

WALL SECTION GENERAL NOTES

1. FOR WALL ASSEMBLY LOCATIONS, SEE BUILDING AND UNIT FLOOR PLANS, SHEET SERIES A2.01-2.07 AND A4.01-4.11 RESPECTIVELY. FOR WALL ASSEMBLY TYPES, SEE SHEETS A9.00-9.01.
2. FOR FLOOR/CEILING ASSEMBLY LOCATIONS SEE BUILDING SECTIONS, SHEET SERIES A3.20-3.22 AND A8.01-8.04. FOR FLOOR/ASSEMBLY TYPES, SEE SHEET A9.05.
3. FOR ROOF/CEILING ASSEMBLY LOCATIONS, SEE BUILDING SECTIONS, SHEET SERIES A3.20-3.22 AND A8.01-8.04. FOR ROOF/CEILING ASSEMBLY TYPES, SEE SHEET A9.05.
4. SEE STRUCTURAL DRAWINGS FOR FOUNDATION INFORMATION AND RELATED STRUCTURAL INFORMATION.
5. SEE ROOF PLAN, SHEET A2.07, FOR PARAPET HEIGHTS, SLOPES, VENTILATION, ETC.

KEYNOTE LEGEND	
#	KEYNOTE
05-52B	STEEL OSHA RAILING
05-70C	METAL PANEL FASCIA
23 3700-06	MECHANICAL EQUIPMENT, S.M.D.

PYATOK
1611 TELEGRAPH AVE.
SUITE 200
OAKLAND, CA 94612
T. 510.465.7010 | F. 510.465.8575
www.pyatok.com

THE UNITY COUNCIL
1900 FRUITVALE AVE
#2A
OAKLAND, CA 94601

2700 INTERNATIONAL
OAKLAND, CA 94601

STAMP:
LICENSED ARCHITECT
PETER WALLER
C-23554
4/30/2023
STATE OF CALIFORNIA

ISSUE SCHEDULE

100 SD	5/11/22
50 DD	7/15/22
100 DD	9/16/22
50 CD	11/18/22
PERMIT SET	12/09/22

REVISION SCHEDULE

NO.	ISSUE	DATE

JOB NUMBER:	1937
DRAWN BY:	MA, DV, TN, MO, SP
CHECKED BY:	Checker
ISSUE DATE:	12/09/22
SCALE:	As indicated

TITLE:
WALL SECTIONS

SHEET:
A8.03

0' 2' 4' 8' 16'
SCALE: 1/4" = 1'-0"

PRELIMINARY - Not for Construction -

© 2019 PYATOK ARCHITECTURE & URBAN DESIGN

12/8/2022 6:11:48 PM

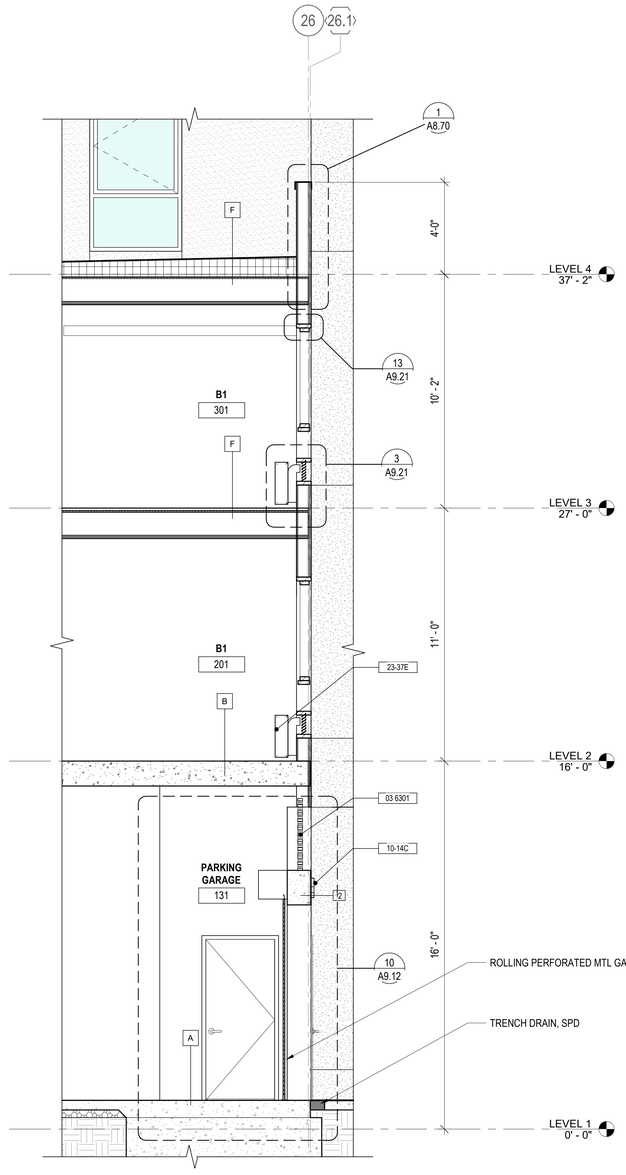

WALL SECTION @ GRID R-U (2)
3/8" = 1'-0"

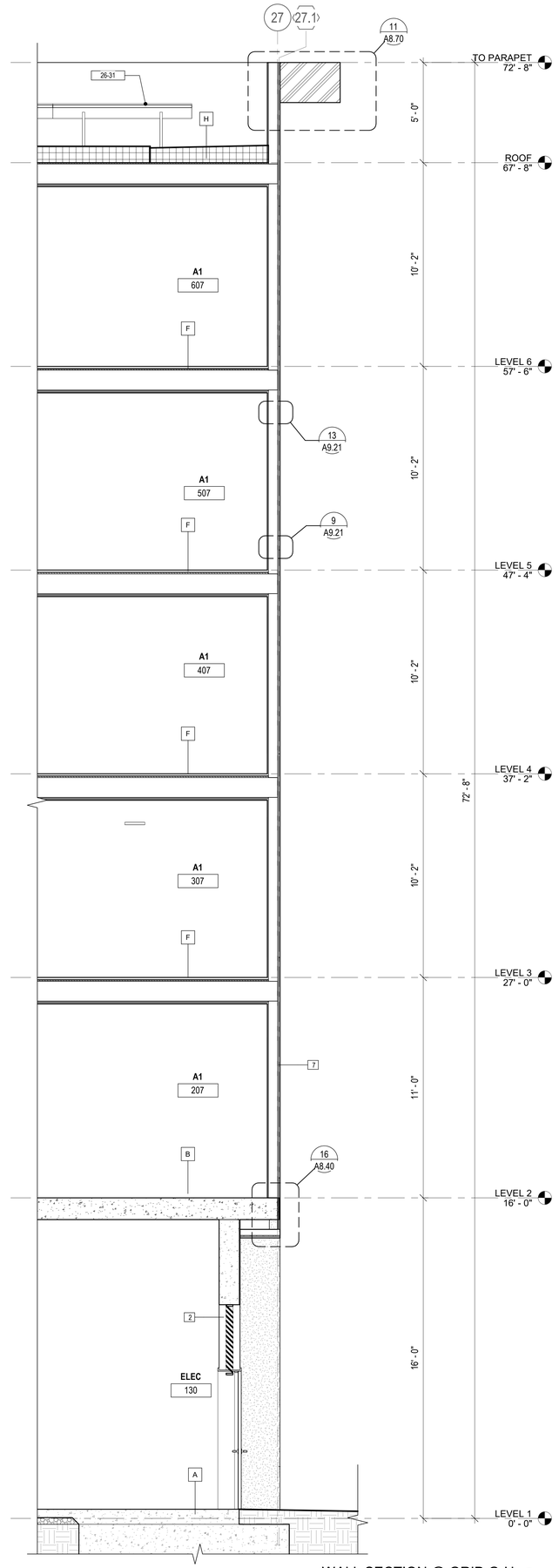

WALL SECTION @ GRID G-H (1)
3/8" = 1'-0"

WALL SECTION GENERAL NOTES

1. FOR WALL ASSEMBLY LOCATIONS, SEE BUILDING AND UNIT FLOOR PLANS, SHEET SERIES A2.01-2.07 AND A4.01-4.11 RESPECTIVELY. FOR WALL ASSEMBLY TYPES, SEE SHEETS A9.00-9.01.
2. FOR FLOOR/CEILING ASSEMBLY LOCATIONS SEE BUILDING SECTIONS, SHEET SERIES A3.20-3.22 AND A8.01-8.04. FOR FLOOR/ASSEMBLY TYPES, SEE SHEET A9.05.
3. FOR ROOF/CEILING ASSEMBLY LOCATIONS, SEE BUILDING SECTIONS, SHEET SERIES A3.20-3.22 AND A8.01-8.04. FOR ROOF/CEILING ASSEMBLY TYPES, SEE SHEET A9.05.
4. SEE STRUCTURAL DRAWINGS FOR FOUNDATION INFORMATION AND RELATED STRUCTURAL INFORMATION.
5. SEE ROOF PLAN, SHEET A2.07, FOR PARAPET HEIGHTS, SLOPES, VENTILATION, ETC.

KEYNOTE LEGEND	
#	KEYNOTE
03 6301	CONCRETE BREEZE BLOCK, PAINTED TO MATCH ADJACENT CEMENT PLASTER
10-14C	PIN MOUNTED ADDRESS
23-37E	THROUGH-WALL HEAT PUMP HEATING / COOLING UNIT W/ LOUVERED VENT HOLES TO EXTERIOR, OCCURS AT EACH RESIDENTIAL UNIT LIVING & BEDROOM, LOUVERED GRILLE WHERE SHOWN, S.M.D.
26-31	PHOTOVOLTAIC PANELS

PYATOK
1611 TELEGRAPH AVE.
SUITE 200
OAKLAND, CA 94612
T. 510.465.7010 | F. 510.465.8575
www.pyatok.com

THE UNITY COUNCIL
1900 FRUITVALE AVE
#2A
OAKLAND, CA 94601

2700 INTERNATIONAL
OAKLAND, CA 94601

STAMP:
LICENSED ARCHITECT
PETER WALLER
C-23551
4/30/2023
STATE OF CALIFORNIA

ISSUE SCHEDULE

100 SD	5/11/22
50 DD	7/15/22
100 DD	9/16/22
50 CD	11/18/22
PERMIT SET	12/09/22

REVISION SCHEDULE

NO.	ISSUE	DATE

JOB NUMBER:	1937
DRAWN BY:	MA, DV, TN, MO, SP
CHECKED BY:	Checker
ISSUE DATE:	12/09/22
SCALE:	As indicated

TITLE:
WALL SECTIONS

SHEET:
A8.04

PRELIMINARY - Not for Construction -

© 2019 PYATOK ARCHITECTURE & URBAN DESIGN

12/8/2022 6:11:52 PM

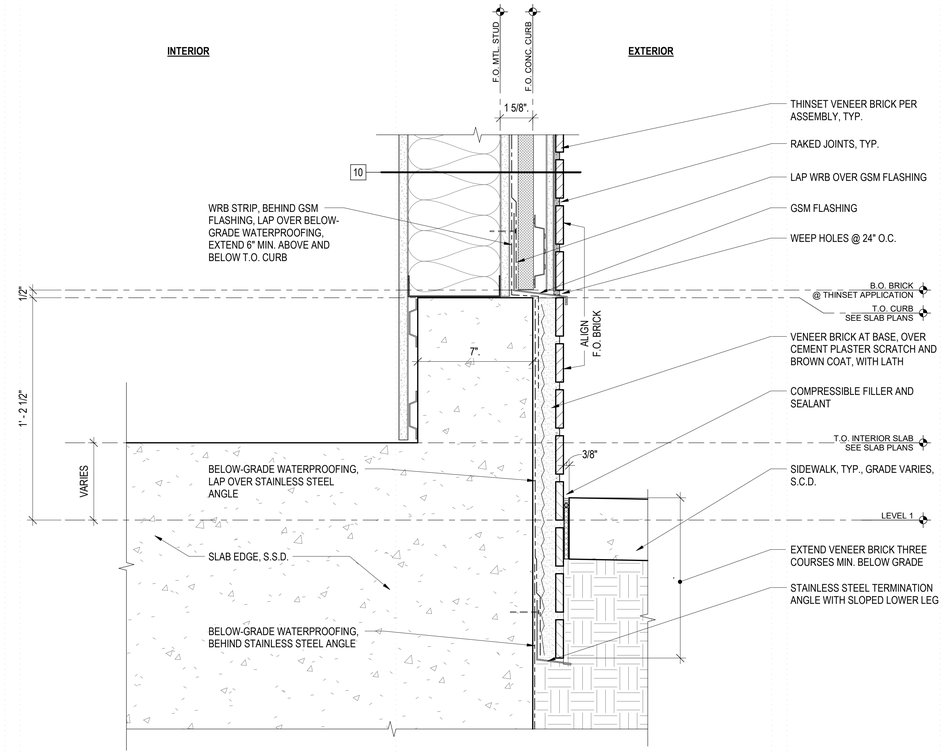

MTL. STUD WALL BASE AT BRICK VENEER (3)
3" = 1'-0"

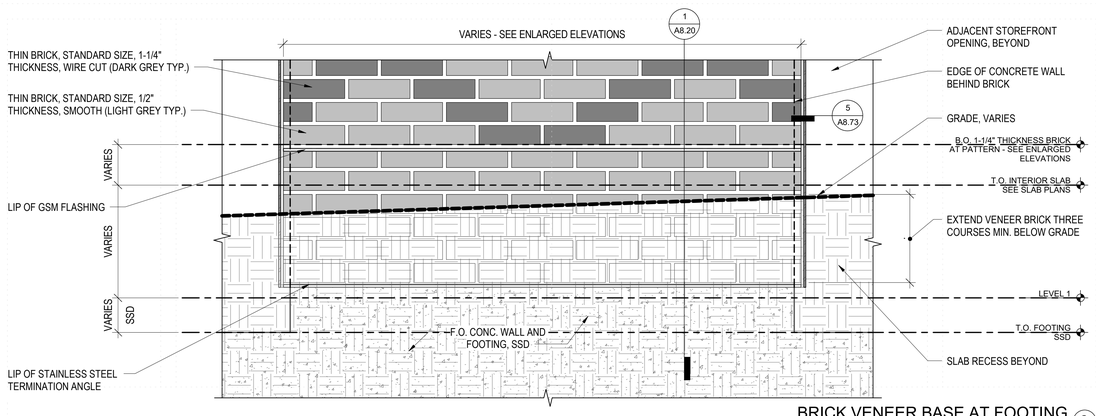

BRICK VENEER BASE AT FOOTING (9)
1 1/2" = 1'-0"

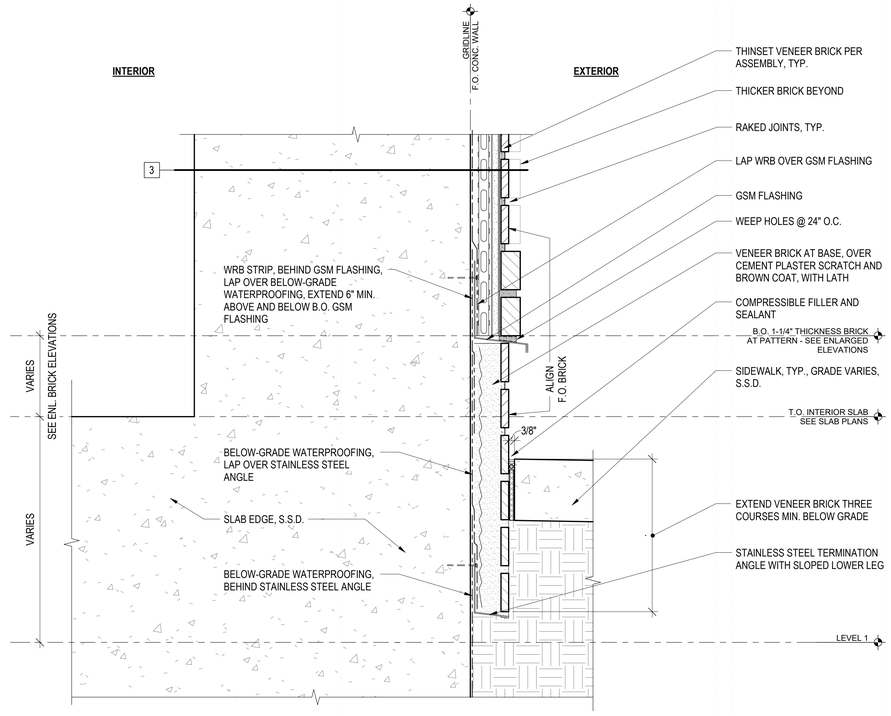

CONC. WALL BASE AT BRICK VENEER (1)
3" = 1'-0"

12/8/2022 6:11:55 PM

PYATOK
1611 TELEGRAPH AVE.
SUITE 200
OAKLAND, CA 94612
T. 510.465.7010 | F. 510.465.8575
www.pyatok.com

THE UNITY COUNCIL
1900 FRUITVALE AVE
#2A
OAKLAND, CA 94601

2700 INTERNATIONAL
OAKLAND, CA 94601

STAMP:
LICENSED ARCHITECT
PETER WALLER
C-33554
4/30/2023
STATE OF CALIFORNIA

ISSUE SCHEDULE

100 SD	5/11/22
50 DD	7/15/22
100 DD	9/16/22
50 CD	11/18/22
PERMIT SET	12/09/22

REVISION SCHEDULE

NO.	ISSUE	DATE

JOB NUMBER:	1937
DRAWN BY:	MA, DV, TN, MO, SP
CHECKED BY:	Checker
ISSUE DATE:	12/09/22
SCALE:	As indicated

TITLE:
AT-GRADE/SLAB DETAILS

SHEET:
A8.20

PRELIMINARY - Not for Construction -

© 2019 PYATOK ARCHITECTURE & URBAN DESIGN

PYATOK
1611 TELEGRAPH AVE.
SUITE 200
OAKLAND, CA 94612
T. 510.465.7010 | F. 510.465.8575
www.pyatok.com

THE UNITY COUNCIL
1900 FRUITVALE AVE
#2A
OAKLAND, CA 94601

2700 INTERNATIONAL

OAKLAND, CA 94601

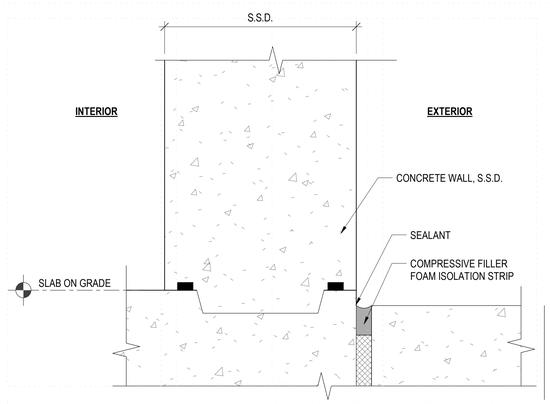

CONCRETE WALL AT GARAGE 5
3" = 1'-0"

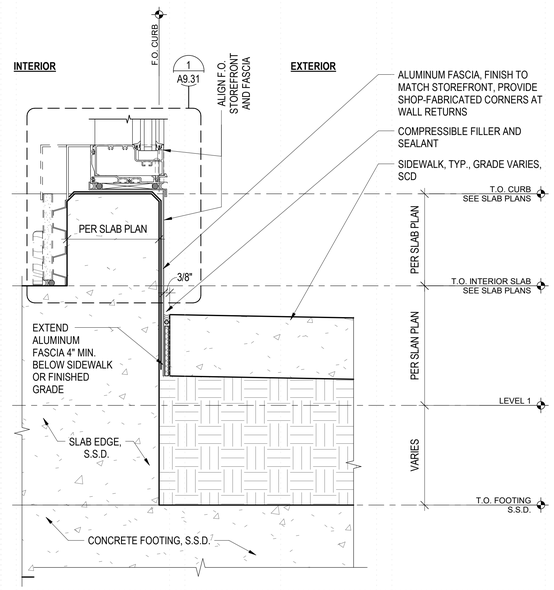

STOREFRONT BASE AT CURB 1
3" = 1'-0"

STAMP:

LICENSED ARCHITECT
PETER WALLER
C-23554
4/30/2023
STATE OF CALIFORNIA

ISSUE SCHEDULE

100 SD	5/11/22
50 DD	7/15/22
100 DD	9/16/22
50 CD	11/18/22
PERMIT SET	12/09/22

REVISION SCHEDULE

NO.	ISSUE	DATE

JOB NUMBER:	1937
DRAWN BY:	MA, DV, TN, MO, SP
CHECKED BY:	Checker
ISSUE DATE:	12/09/22
SCALE:	3" = 1'-0"

TITLE:

AT-GRADE/SLAB DETAILS

SHEET:

A8.21

PRELIMINARY - Not for Construction -

© 2019 PYATOK ARCHITECTURE & URBAN DESIGN

12/8/2022 6:11:57 PM

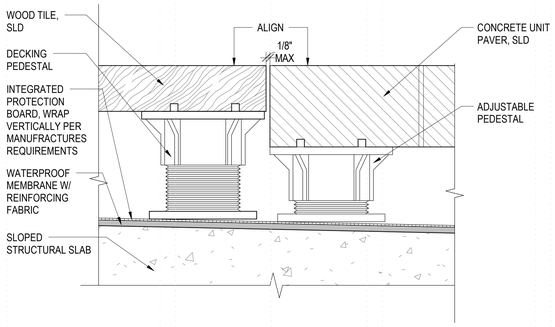

CONCRETE PAVER TRANSITION TO WOOD TILE DECKING 4
6" = 1'-0"

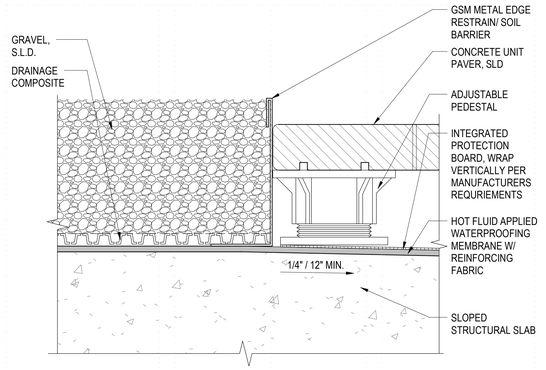

CONCRETE PAVER TRANSITION TO GRAVEL 3
6" = 1'-0"

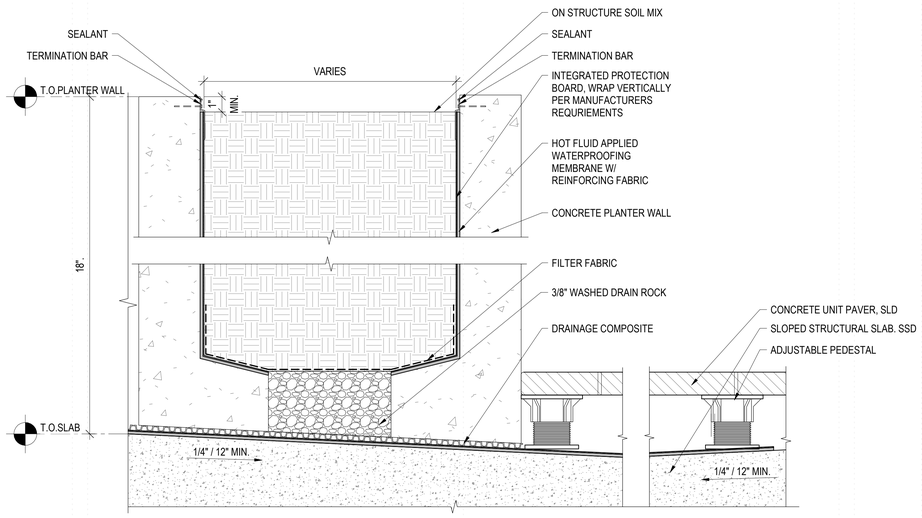

PLANTER WALL TRANSITION ON PODIUM LEVEL 9
3" = 1'-0"

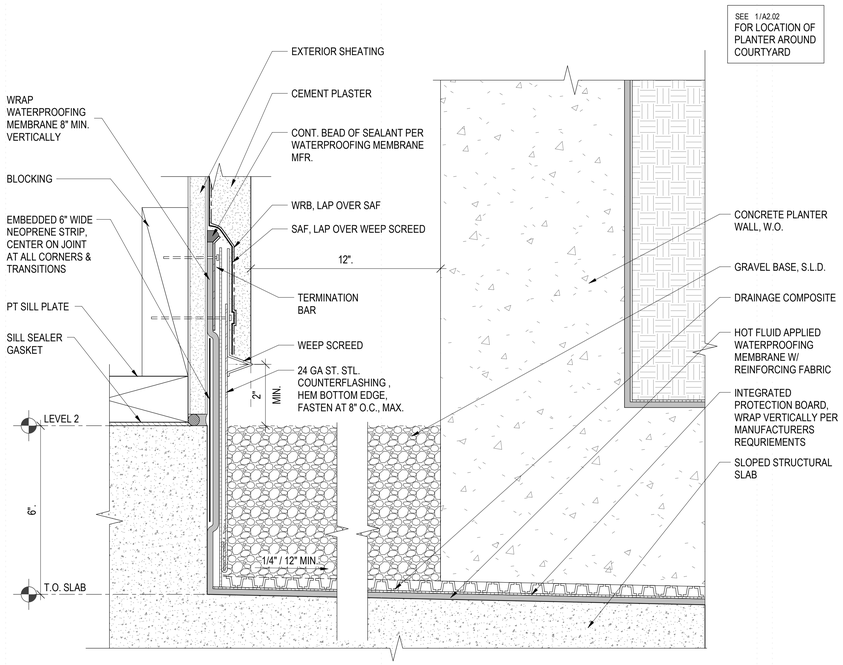

CEMENT PLASTER WALL BASE ON PODIUM 1
6" = 1'-0"

12/8/2022 6:12:00 PM

PYATOK
1611 TELEGRAPH AVE.
SUITE 200
OAKLAND, CA 94612
T. 510.465.7010 | F. 510.465.8575
www.pyatok.com

THE UNITY COUNCIL
1900 FRUITVALE AVE
#2A
OAKLAND, CA 94601

2700 INTERNATIONAL
OAKLAND, CA 94601

STAMP:
LICENSED ARCHITECT
PETER WALLER
C-23551
4/30/2023
STATE OF CALIFORNIA

ISSUE SCHEDULE

100 SD	5/11/22
50 DD	7/15/22
100 DD	9/16/22
50 CD	11/18/22
PERMIT SET	12/09/22

REVISION SCHEDULE

NO.	ISSUE	DATE

JOB NUMBER:	1937
DRAWN BY:	Author
CHECKED BY:	Checker
ISSUE DATE:	12/09/22
SCALE:	As indicated

TITLE:
PODIUM SLAB DETAILS

SHEET:
A8.30

PRELIMINARY - Not for Construction -

© 2019 PYATOK ARCHITECTURE & URBAN DESIGN

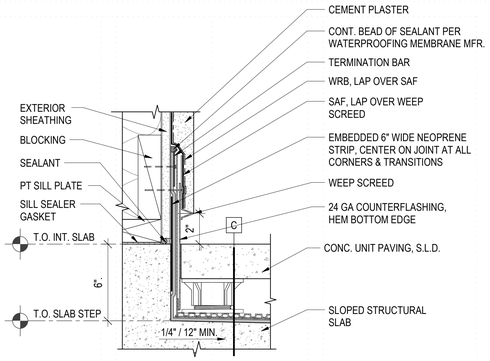

CEMENT PLASTER WALL BASE ON PODIUM - AT PAVER 4
3" = 1'-0"

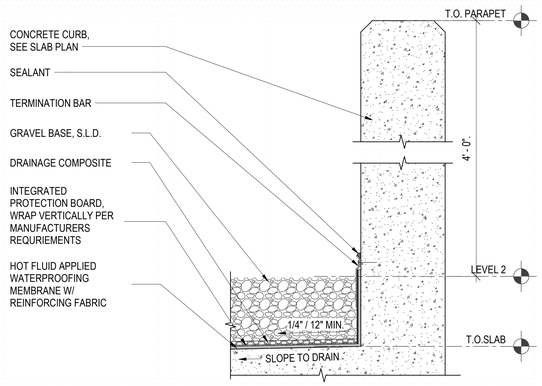

CONCRETE PARAPET AT LEVEL 2 3
3" = 1'-0"

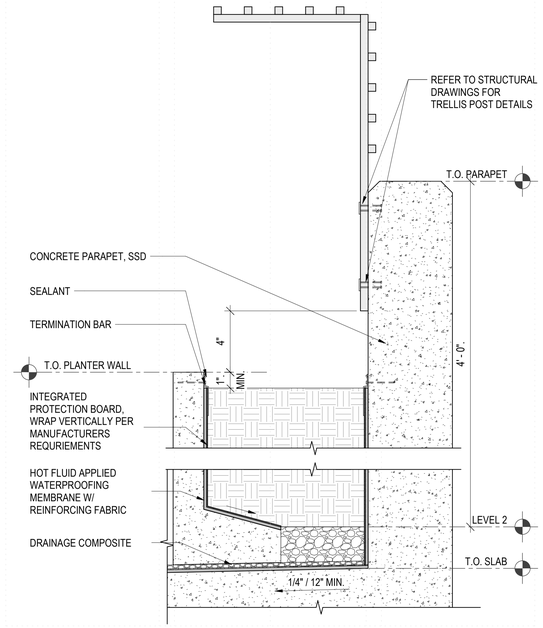

CONCRETE PARAPET AT PLANTER-LEVEL 2 1
3" = 1'-0"

PYATOK
1611 TELEGRAPH AVE.
SUITE 200
OAKLAND, CA 94612
T. 510.465.7010 | F. 510.465.8575
www.pyatok.com

THE UNITY COUNCIL
1900 FRUITVALE AVE
#2A
OAKLAND, CA 94601

2700 INTERNATIONAL
OAKLAND, CA 94601

STAMP:

LICENSED ARCHITECT
PETER WALLER
C-23551
4/30/2023
STATE OF CALIFORNIA

ISSUE SCHEDULE

100 SD	5/11/22
50 DD	7/15/22
100 DD	9/16/22
50 CD	11/18/22
PERMIT SET	12/09/22

REVISION SCHEDULE

NO.	ISSUE	DATE

JOB NUMBER:	1937
DRAWN BY:	Author
CHECKED BY:	Checker
ISSUE DATE:	12/09/22
SCALE:	3" = 1'-0"

TITLE:
PODIUM SLAB DETAILS

SHEET:
A8.31

PRELIMINARY - Not for Construction -

© 2019 PYATOK ARCHITECTURE & URBAN DESIGN

12/8/2022 6:12:02 PM

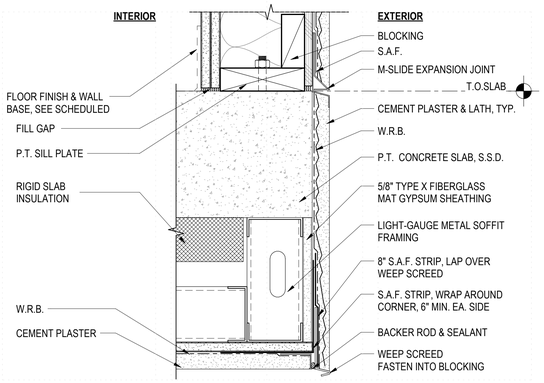

CEMENT PLASTER EXTERIOR SOFFIT BELOW PODIUM SLAB 16

3" = 1'-0"

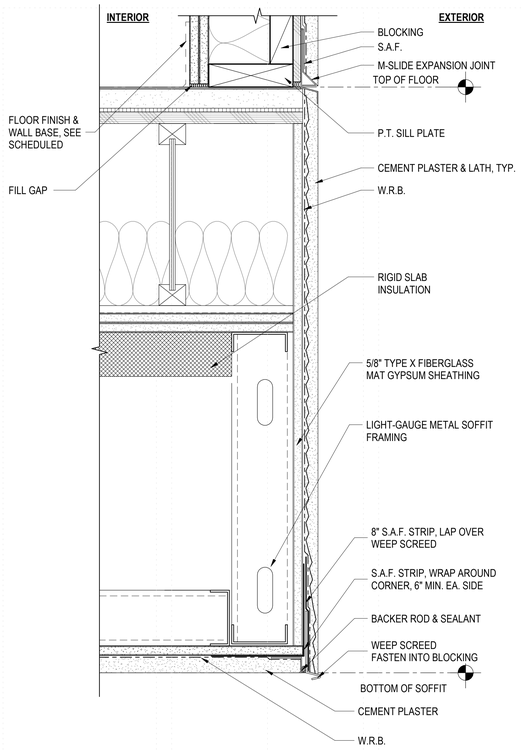

CEMENT PLASTER EXTERIOR SOFFIT BELOW WOOD FRAMING 11

3" = 1'-0"

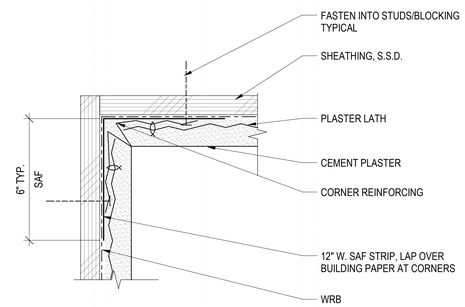

CEMENT PLASTER INSIDE CORNER 8

6" = 1'-0"

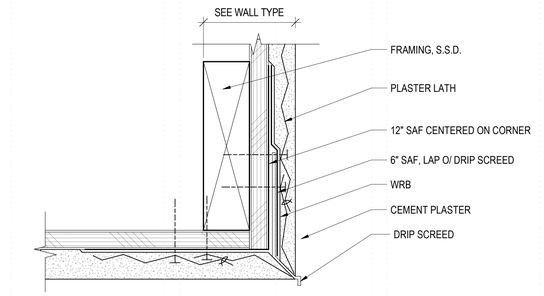

CEMENT PLASTER SOFFIT TRANSITION 4

6" = 1'-0"

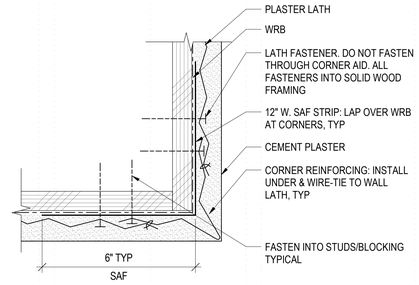

CEMENT PLASTER OUTSIDE CORNER 7

6" = 1'-0"

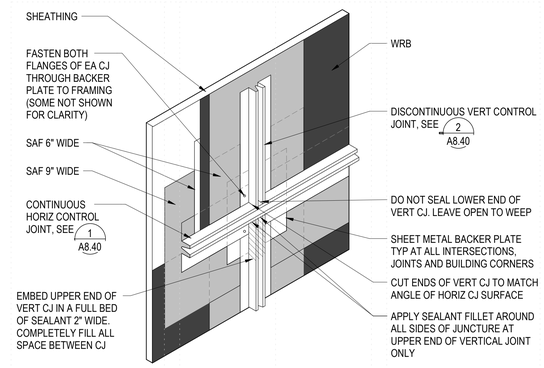

CEM PLAS CONTROL JOINT INTERSECTION 3

3" = 1'-0"

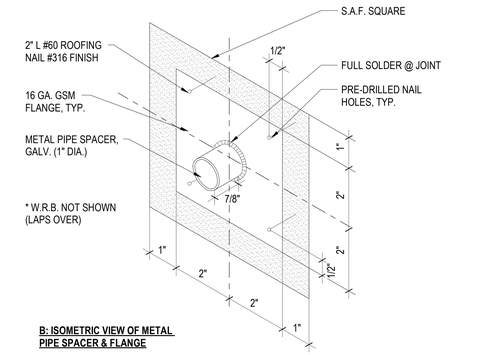

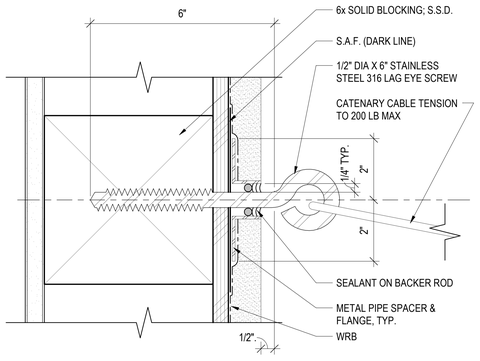

CATENARY CABLE ANCHORAGE 6

6" = 1'-0"

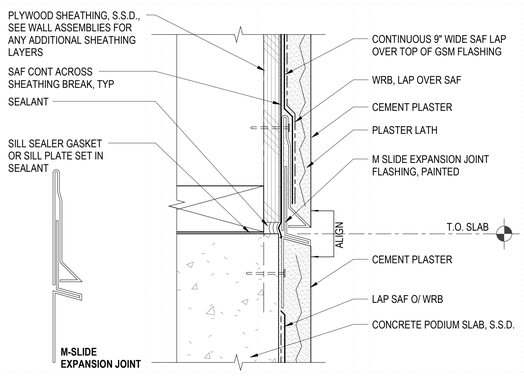

CEMENT PLASTER EXPANSION JOINT AT FLOOR 9

6" = 1'-0"

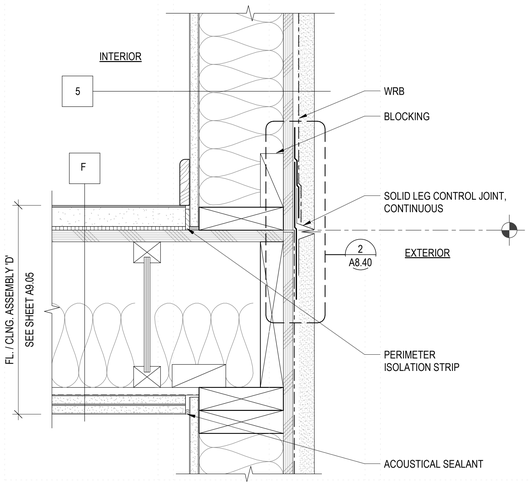

EXT CEM PLAS AT WOOD-FRAMED FLOOR 5

3" = 1'-0"

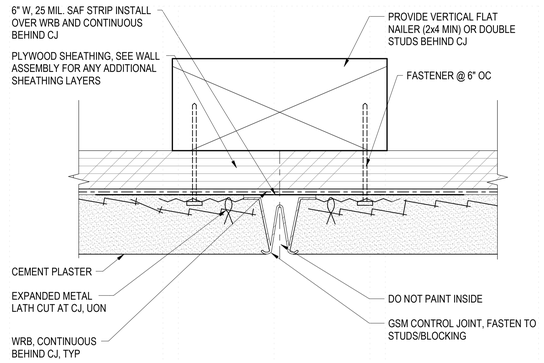

CEM PLAS CONTROL JOINT (VERT) 2

12" = 1'-0"

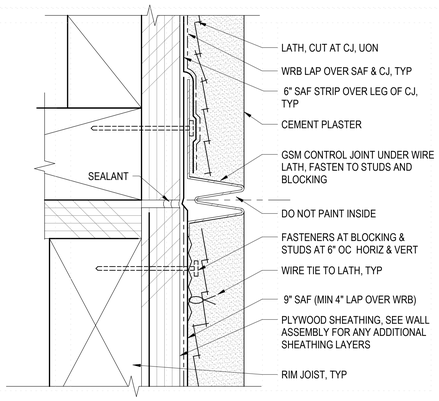

CEM PLAS CONTROL JOINT (HORIZ) 1

12" = 1'-0"

PYATOK
1611 TELEGRAPH AVE.
SUITE 200
OAKLAND, CA 94612
T. 510.465.7010 | F. 510.465.8575
www.pyatok.com

THE UNITY COUNCIL
1900 FRUITVALE AVE
#2A
OAKLAND, CA 94601

2700 INTERNATIONAL

OAKLAND, CA 94601

STAMP:

LICENSED ARCHITECT
PETER WALLER
C-23554
4/30/2023
STATE OF CALIFORNIA

ISSUE SCHEDULE

100 SD	5/11/22
50 DD	7/15/22
100 DD	9/16/22
50 CD	11/18/22
PERMIT SET	12/09/22

REVISION SCHEDULE

NO.	ISSUE	DATE

JOB NUMBER:	1937
DRAWN BY:	MA, DV, TN, MO, SP
CHECKED BY:	Checker
ISSUE DATE:	12/09/22
SCALE:	As indicated

TITLE:

ENVELOPE DETAILS

SHEET:

A8.40

PRELIMINARY - Not for Construction -

© 2019 PYATOK ARCHITECTURE & URBAN DESIGN

12/8/2022 6:12:06 PM

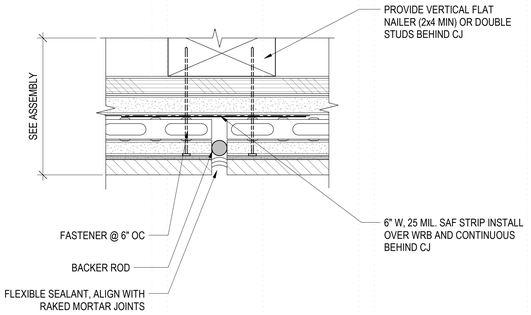

THIN BRICK CONTROL JOINT, VERTICAL (4)
6" = 1'-0"

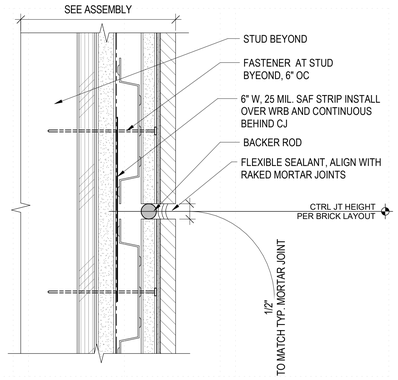

THIN BRICK CONTROL JOINT, HORIZONTAL (3)
6" = 1'-0"

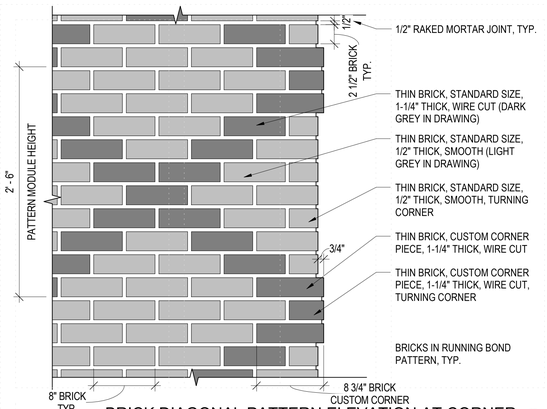

BRICK DIAGONAL PATTERN ELEVATION AT CORNER (6)
1 1/2" = 1'-0"

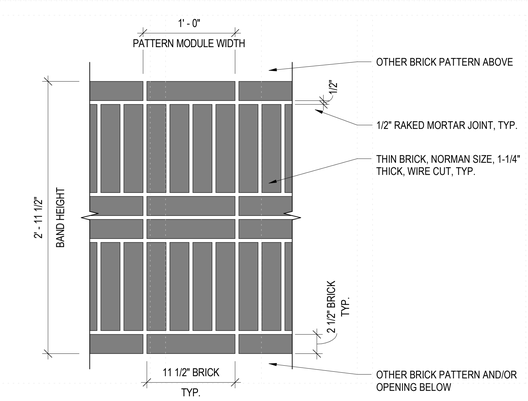

BRICK BAND ELEVATION (2)
1 1/2" = 1'-0"

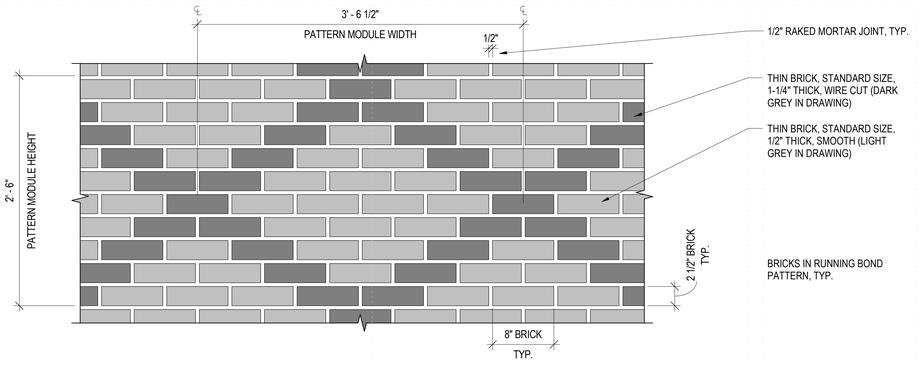

BRICK DIAGONAL PATTERN ELEVATION (1)
1 1/2" = 1'-0"

12/8/2022 6:12:08 PM

PYATOK
1611 TELEGRAPH AVE.
SUITE 200
OAKLAND, CA 94612
T. 510.465.7010 | F. 510.465.8575
www.pyatok.com

THE UNITY COUNCIL
1900 FRUITVALE AVE
#2A
OAKLAND, CA 94601

2700 INTERNATIONAL
OAKLAND, CA 94601

STAMP:

LICENSED ARCHITECT
PETER WALLER
C-23554
4/30/2023
STATE OF CALIFORNIA

ISSUE SCHEDULE

100 SD	5/11/22
50 DD	7/15/22
100 DD	9/16/22
50 CD	11/18/22
PERMIT SET	12/09/22

REVISION SCHEDULE

NO.	ISSUE	DATE

JOB NUMBER:	1937
DRAWN BY:	MA, DV, TN, MO, SP
CHECKED BY:	Checker
ISSUE DATE:	12/09/22
SCALE:	As indicated

TITLE:
ENVELOPE DETAILS - BRICK

SHEET:
A8.41

PRELIMINARY - Not for Construction -

© 2019 PYATOK ARCHITECTURE & URBAN DESIGN

PYATOK
1611 TELEGRAPH AVE.
SUITE 200
OAKLAND, CA 94612
T. 510.465.7010 | F. 510.465.8575
www.pyatok.com

THE UNITY COUNCIL
1900 FRUITVALE AVE
#2A
OAKLAND, CA 94601

2700 INTERNATIONAL

OAKLAND, CA 94601

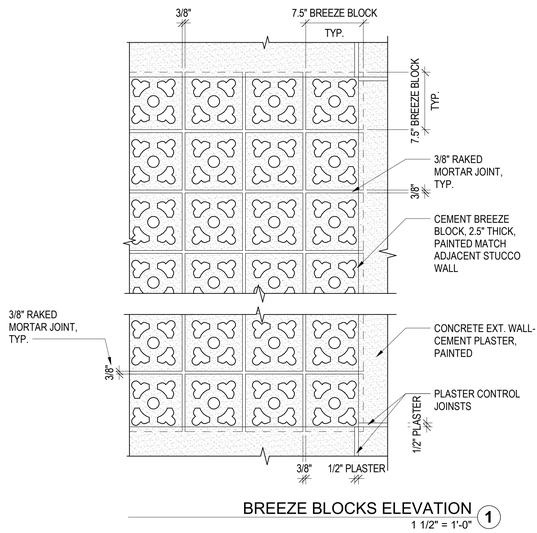

BREEZE BLOCKS ELEVATION (1)
1 1/2" = 1'-0"

STAMP:

ISSUE SCHEDULE

100 SD	5/11/22
50 DD	7/15/22
100 DD	9/16/22
50 CD	11/18/22
PERMIT SET	12/09/22

REVISION SCHEDULE

NO.	ISSUE	DATE

JOB NUMBER:	1937
DRAWN BY:	Author
CHECKED BY:	Checker
ISSUE DATE:	12/09/22
SCALE:	1 1/2" = 1'-0"

TITLE:

ENVELOPE DETAILS - BREEZE BLOCKS

SHEET:

A8.43

PRELIMINARY - Not for Construction -

© 2019 PYATOK ARCHITECTURE & URBAN DESIGN

12/8/2022 6:12:11 PM

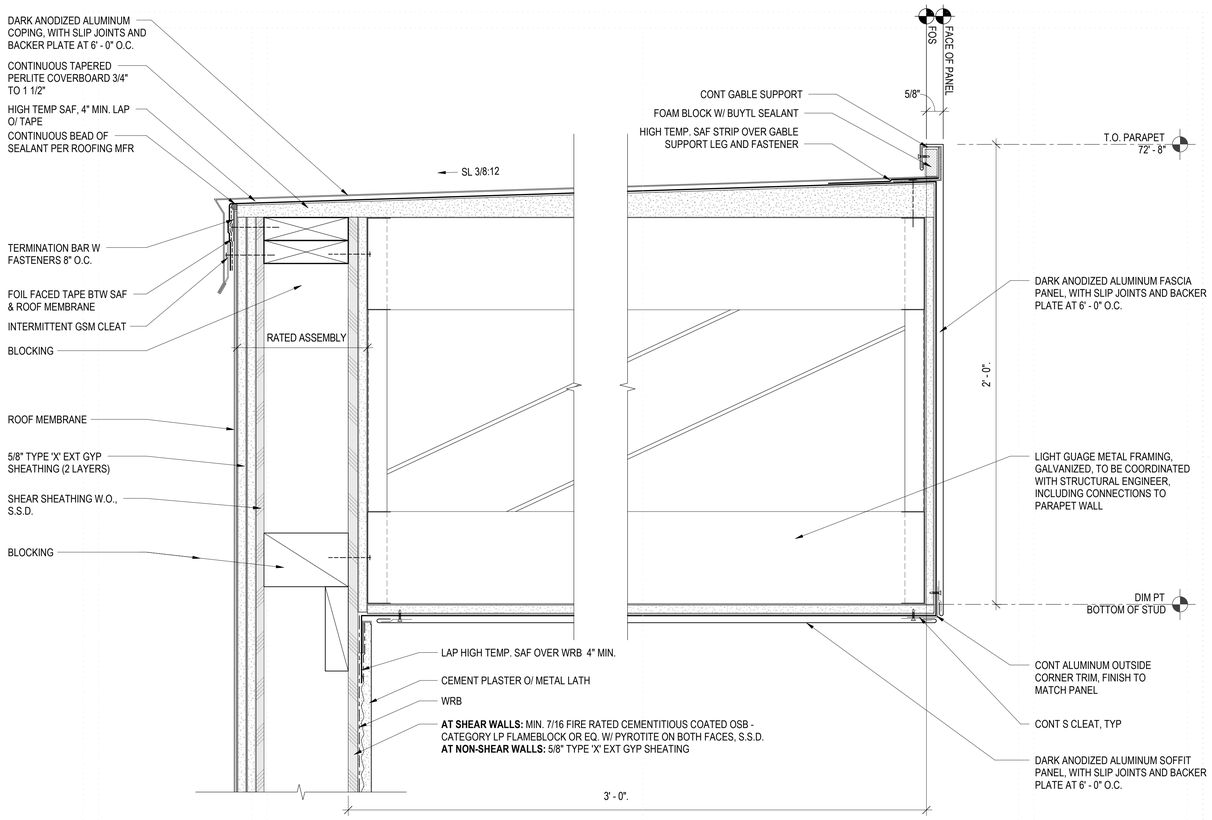

METAL PANEL CORNICE AT PARAPET (11)
3" = 1'-0"

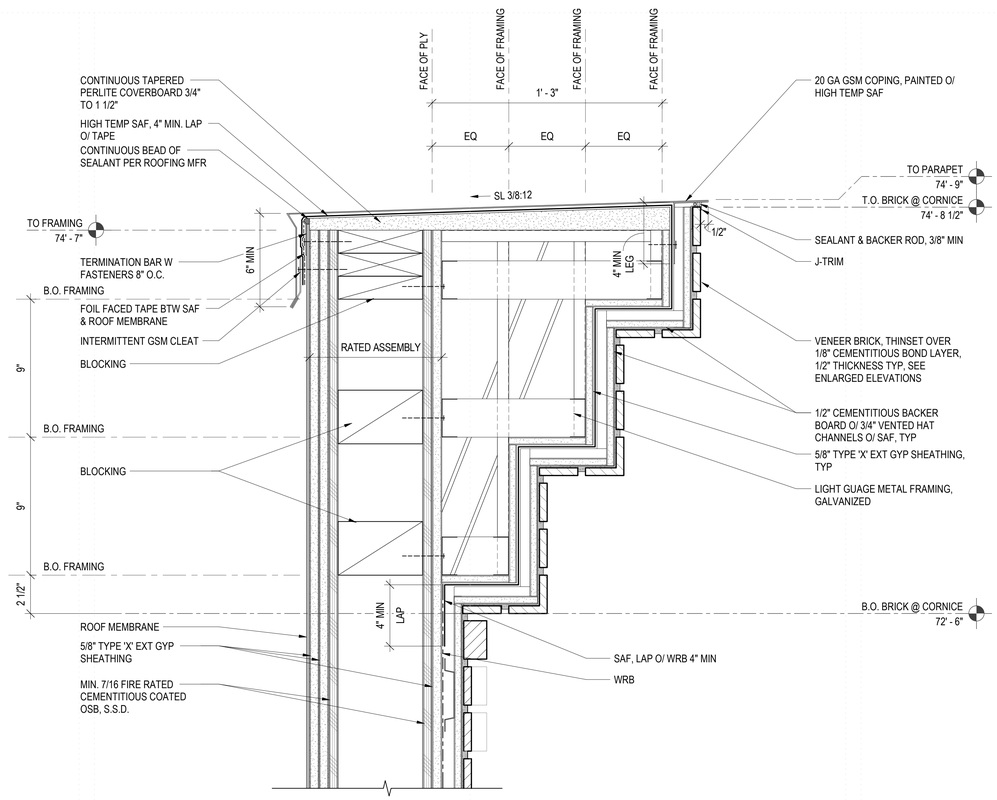

BRICK CORNICE AT PARAPET (9)
3" = 1'-0"

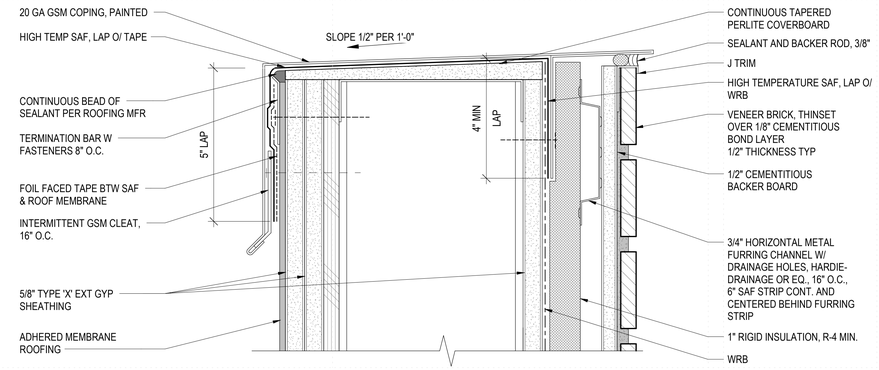

PARAPET CAP - LEVEL 2 BRICK (2)
6" = 1'-0"

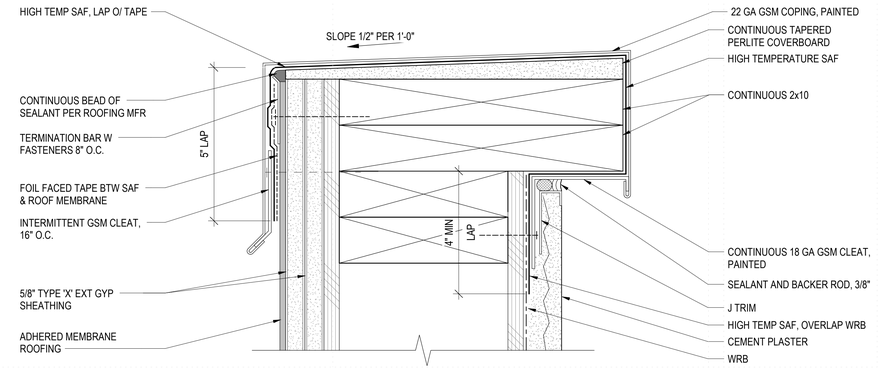

PARAPET CAP - TYPICAL (3)
6" = 1'-0"

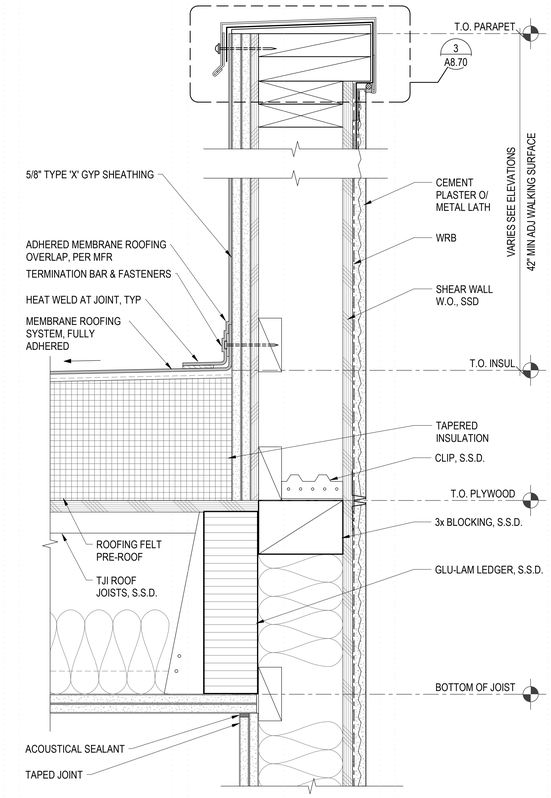

2 HR WALL PARAPET - CEMENT PLASTER (1)
3" = 1'-0"

PYATOK
1611 TELEGRAPH AVE.
SUITE 200
OAKLAND, CA 94612
T. 510.465.7010 | F. 510.465.8575
www.pyatok.com

THE UNITY COUNCIL
1900 FRUITVALE AVE
#2A
OAKLAND, CA 94601

2700 INTERNATIONAL

OAKLAND, CA 94601

STAMP:

LICENSED ARCHITECT — PETER WALLER — C-33554 — 4/30/2023 — STATE OF CALIFORNIA

ISSUE SCHEDULE

100 SD	5/11/22
50 DD	7/15/22
100 DD	9/16/22
50 CD	11/18/22
PERMIT SET	12/09/22

REVISION SCHEDULE

NO.	ISSUE	DATE

JOB NUMBER:	1937
DRAWN BY:	MA, DV, TN, MO, SP
CHECKED BY:	Checker
ISSUE DATE:	12/09/22
SCALE:	As indicated

TITLE:

ROOF DETAILS

SHEET:

A8.70

PRELIMINARY - Not for Construction -

© 2019 PYATOK ARCHITECTURE & URBAN DESIGN

12/8/2022 6:12:14 PM

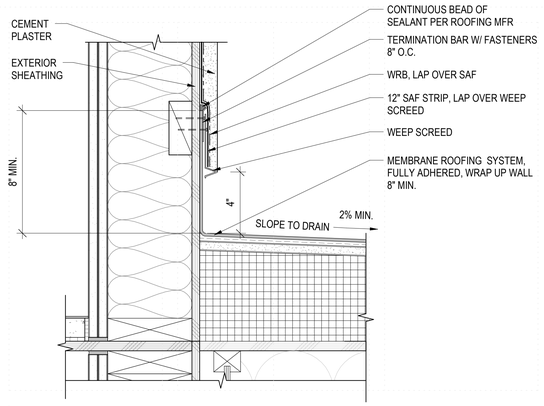

TOPPING SLAB AT WALL BASE (STUCCO) 6
3" = 1'-0"

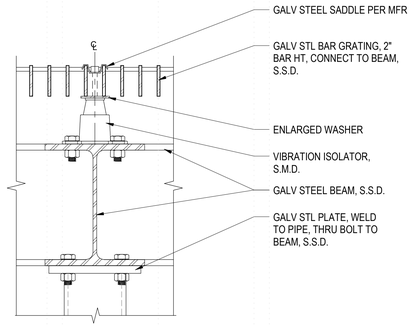

MECHANICAL PLATFORM ISOLATOR 5
3" = 1'-0"

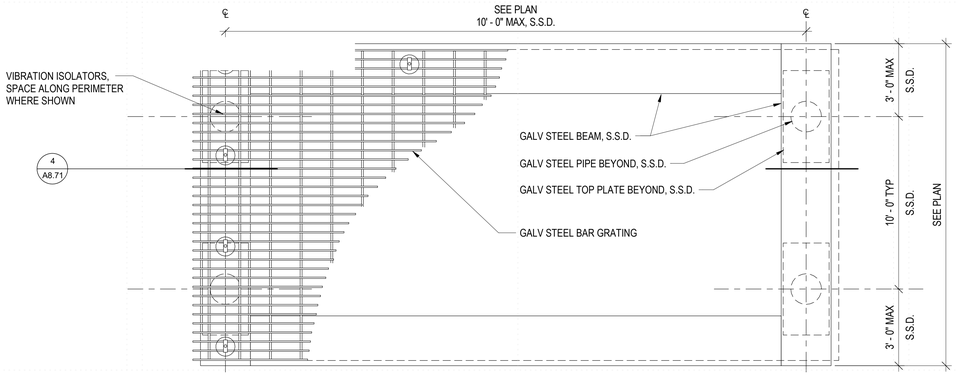

MECHANICAL PLATFORM - PLAN VIEW 3
1 1/2" = 1'-0"

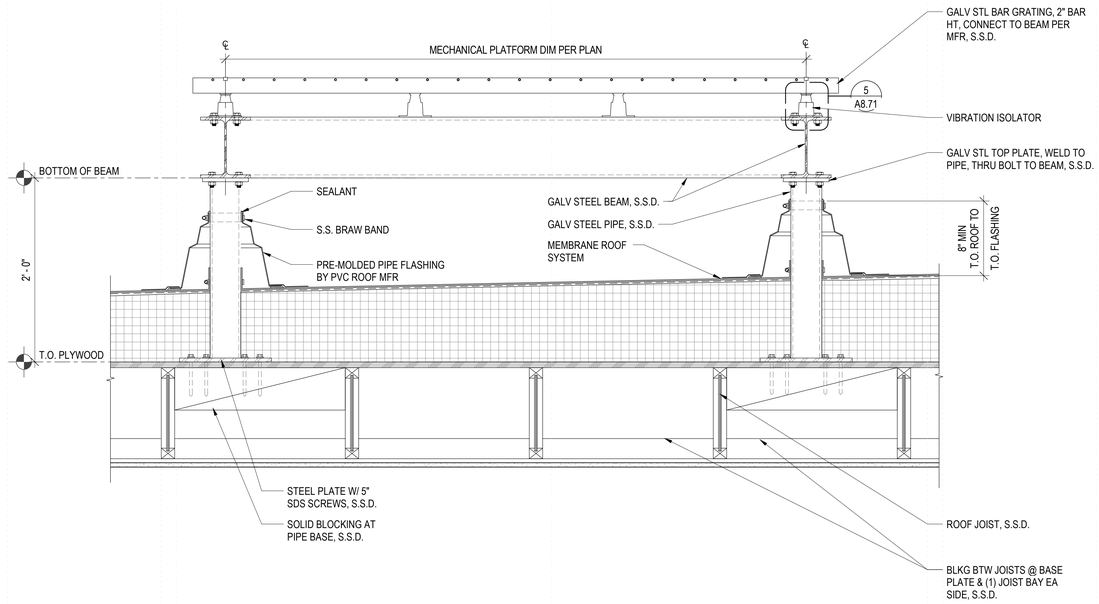

MECHANICAL PLATFORM - SECTION 4
1 1/2" = 1'-0"

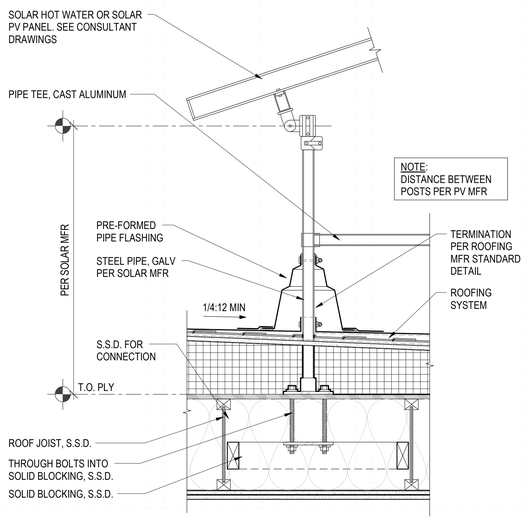

SOLAR PV PIPE SUPPORT SECT 2
1 1/2" = 1'-0"

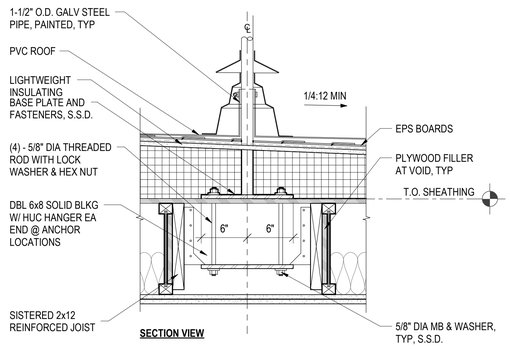

SECTION VIEW

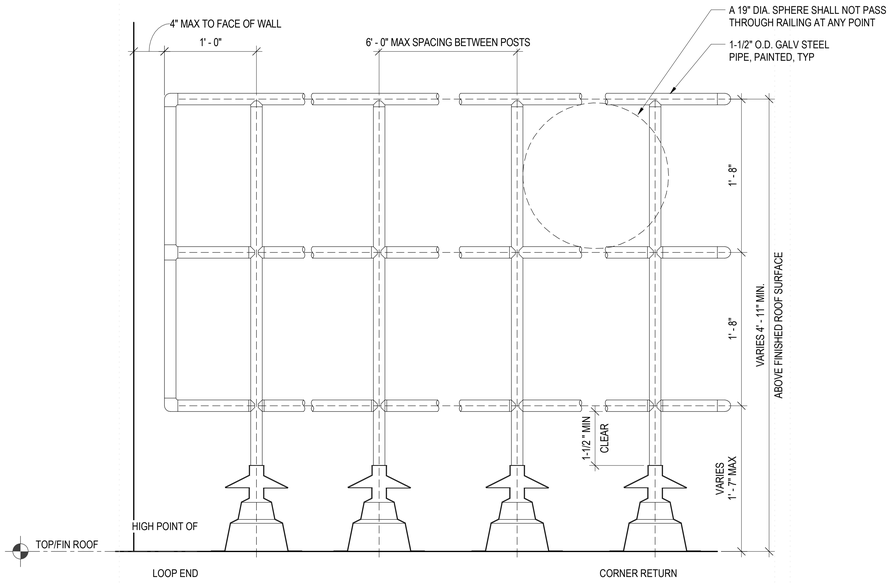

1. GUARDRAILS AND HANDRAILS SHALL BE DESIGNED TO WITHSTAND 250 LB CONCENTRATED LOAD APPLIED IN ANY DIRECTION AND AT ANY POINT ON THE TOP RAIL
2. POSTS SHALL NOT INTERRUPT THE CONTINUATION OF THE TOP RAIL AT ANY POINT ALONG THE RAILING, INCLUDING CORNERS AND END TERMINATIONS, THE TOP SURFACE OF THE TOP RAILING SHALL BE SMOOTH AND SHALL NOT BE INTERRUPTED BY PROJECTED FITTINGS.
3. RAILS SHALL BE LEVEL AND HORIZONTAL, PERPENDICULAR TO POSTS. PROVIDE INTERMEDIATE RAILS TO MAINTAIN 19" MAX. CLEARANCE BETWEEN REAILS PER OSHA 1910
4. POST SPACING TO BE EQUAL ALONG LENGTH OF RAILING, 6'-0" MAX. SPACING

ROOF GUARDRAIL 1
1 1/2" = 1'-0"

PYATOK
1611 TELEGRAPH AVE.
SUITE 200
OAKLAND, CA 94612
T. 510.465.7010 | F. 510.465.8575
www.pyatok.com

THE UNITY COUNCIL
1900 FRUITVALE AVE
#2A
OAKLAND, CA 94601

2700 INTERNATIONAL
OAKLAND, CA 94601

STAMP:

LICENSED ARCHITECT
PETER WALLER
C-33554
4/30/2023
STATE OF CALIFORNIA

ISSUE SCHEDULE

100 SD	5/11/22
50 DD	7/15/22
100 DD	9/16/22
50 CD	11/18/22
PERMIT SET	12/09/22

REVISION SCHEDULE

NO.	ISSUE	DATE

JOB NUMBER:	1937
DRAWN BY:	MA, DV, TN, MO, SP
CHECKED BY:	Checker
ISSUE DATE:	12/09/22
SCALE:	As indicated

TITLE:
ROOF DETAILS

SHEET:
A8.71

PRELIMINARY - Not for Construction -

© 2019 PYATOK ARCHITECTURE & URBAN DESIGN

12/8/2022 6:12:17 PM

AWNING ELEV. - MITCHELL STREET (15)
3/16" = 1'-0"

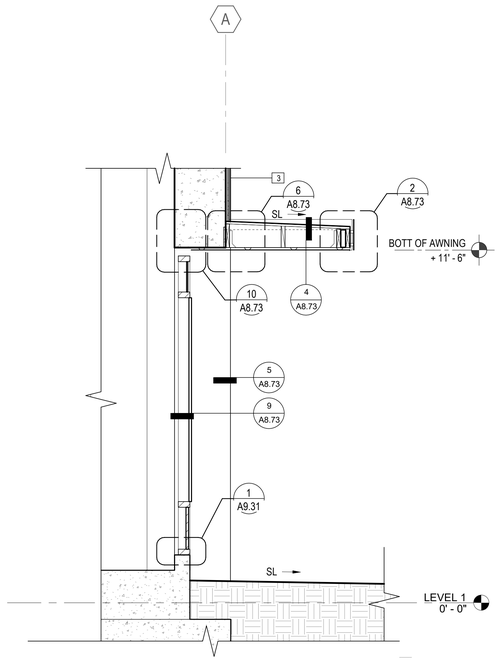

AWNING SECTION @ GRID 2.1-5 (7)
1/2" = 1'-0"

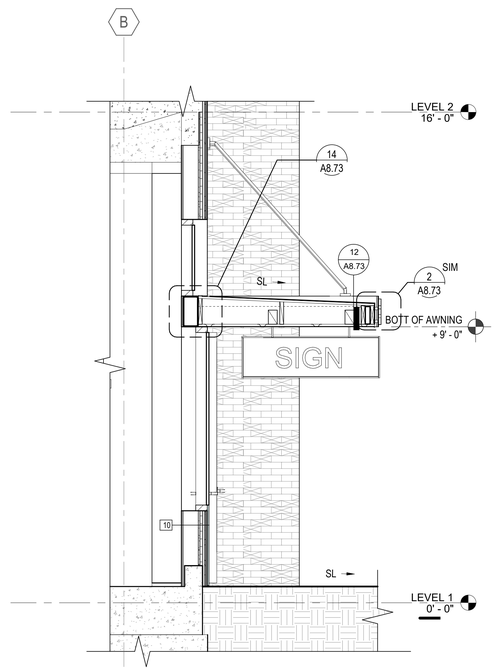

WALL SECTION @ GRID 16-13 (S) (3)
1/2" = 1'-0"

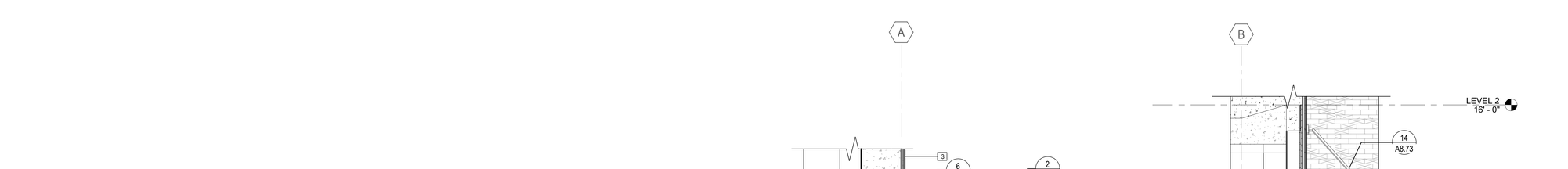

AWNING ELEV - INTERNATIONAL BOULEVARD (2)
3/16" = 1'-0"

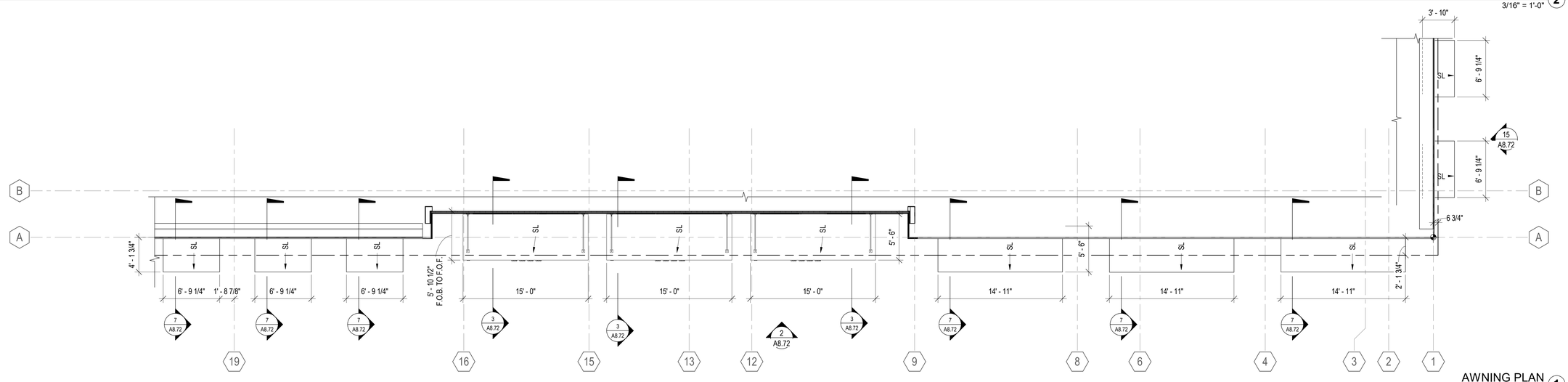

AWNING PLAN (1)
3/16" = 1'-0"

12/8/2022 6:12:22 PM

PYATOK
1611 TELEGRAPH AVE.
SUITE 200
OAKLAND, CA 94612
T. 510.465.7010 | F. 510.465.8575
www.pyatok.com

THE UNITY COUNCIL
1900 FRUITVALE AVE
#2A
OAKLAND, CA 94601

2700 INTERNATIONAL
OAKLAND, CA 94601

STAMP:
LICENSED ARCHITECT
PETER WALLER
C-23554
4/30/2023
STATE OF CALIFORNIA

ISSUE SCHEDULE

100 SD	5/11/22
50 DD	7/15/22
100 DD	9/16/22
50 CD	11/18/22
PERMIT SET	12/09/22

REVISION SCHEDULE

NO.	ISSUE	DATE

JOB NUMBER:	1937
DRAWN BY:	MA, DV, TN, MO, SP
CHECKED BY:	Checker
ISSUE DATE:	12/09/22
SCALE:	As indicated

TITLE:
AWNING DETAILS

SHEET:
A8.72

PRELIMINARY - Not for Construction -

© 2019 PYATOK ARCHITECTURE & URBAN DESIGN

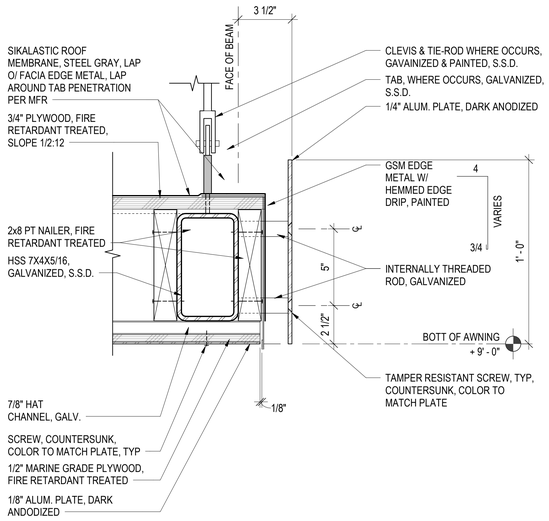

AWNING RAKE W/ TIE ROD **12**
3" = 1'-0"

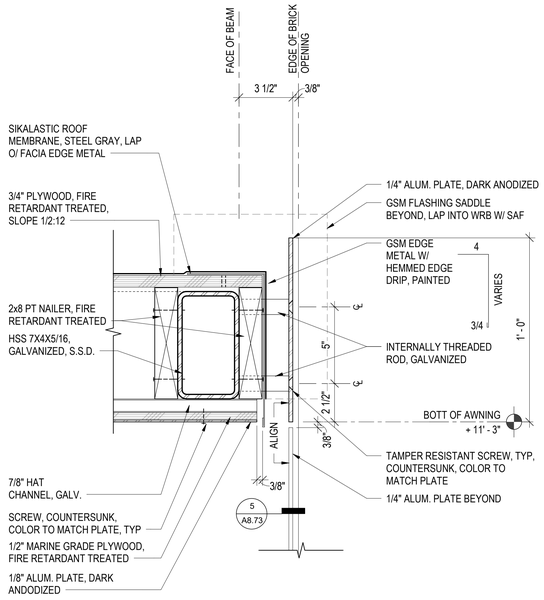

AWNING RAKE **4**
3" = 1'-0"

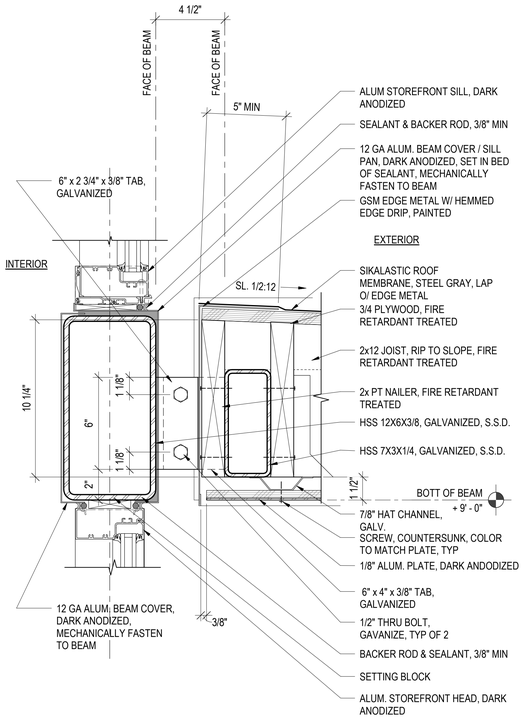

AWNING @ BEAM **14**
3" = 1'-0"

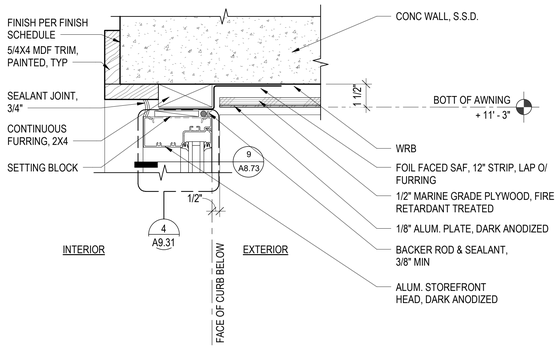

STOREFRONT HEAD @ AWNING **10**
3" = 1'-0"

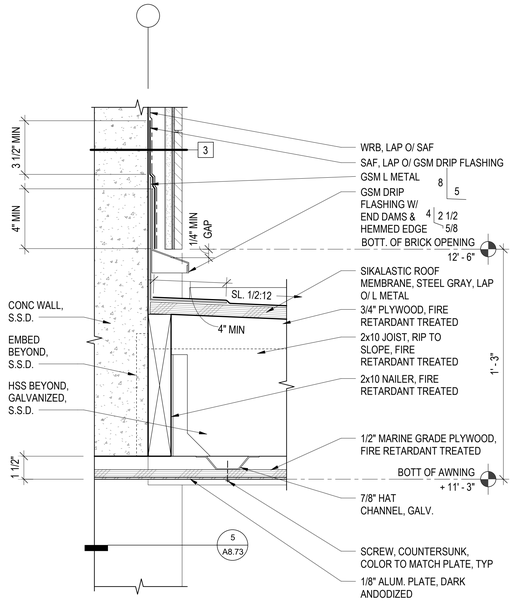

AWNING @ WALL **6**
3" = 1'-0"

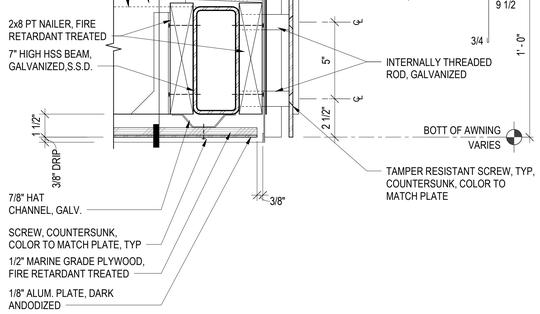

AWNING EAVE **2**
3" = 1'-0"

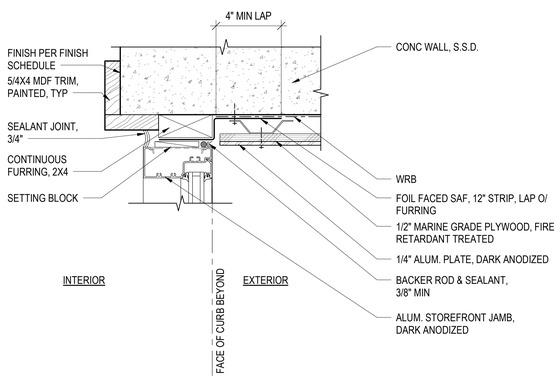

STOREFRONT JAMB @ MTL RETURN **9**
3" = 1'-0"

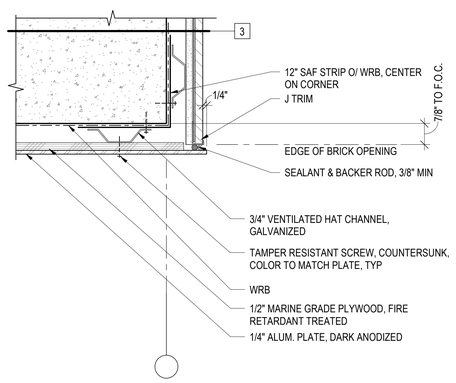

BRICK OUTSIDE CORNER AT MTL RETURN - PLAN DTL **5**
3" = 1'-0"

PYATOK
1611 TELEGRAPH AVE.
SUITE 200
OAKLAND, CA 94612
T. 510.465.7010 | F. 510.465.8575
www.pyatok.com

THE UNITY COUNCIL
1900 FRUITVALE AVE
#2A
OAKLAND, CA 94601

2700 INTERNATIONAL
OAKLAND, CA 94601

STAMP:
PETER WALLER
C-23591
4/30/2023
STATE OF CALIFORNIA
LICENSED ARCHITECT

ISSUE SCHEDULE

100 SD	5/11/22
50 DD	7/15/22
100 DD	9/16/22
50 CD	11/18/22
PERMIT SET	12/09/22

REVISION SCHEDULE

NO.	ISSUE	DATE

JOB NUMBER:	1937
DRAWN BY:	MA, DV, TN, MO, SP
CHECKED BY:	Checker
ISSUE DATE:	12/09/22
SCALE:	3" = 1'-0"

TITLE:
AWNING DETAILS

SHEET:
A8.73

PRELIMINARY - Not for Construction -

© 2019 PYATOK ARCHITECTURE & URBAN DESIGN

12/8/2022 6:12:25 PM

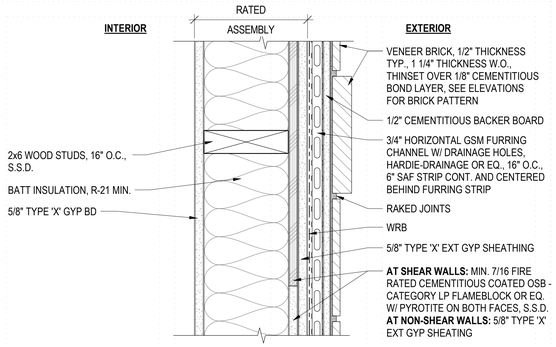

1 HR FR	GA (23RD ED.) #WP 8105

1 HR EXT WD STUD - VENEER BRICK 8

3" = 1'-0"

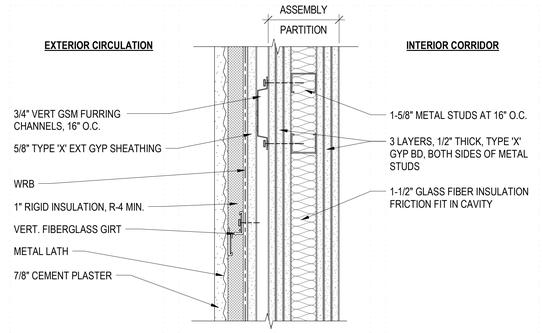

3 HR FR	GA (23RD ED.) #WP 2922 UL DESIGN No. U435 (PROPRIETARY)

3 HR FIRE WALL, CROSS CORRIDOR, EXT CONDITION 4

3" = 1'-0"

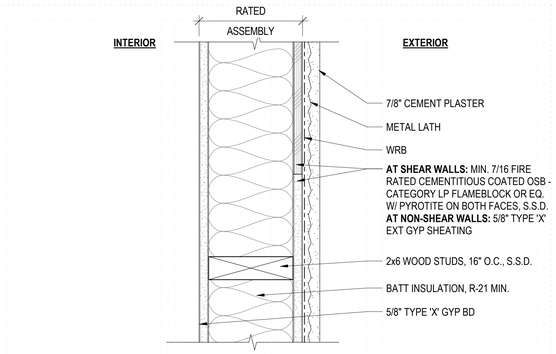

1 HR FR	**SHEAR WALL:** UL BXUV.V337 (CONSTRUCTION NO. 1) **NON-SHEAR WALL:** GA (23RD ED.) #WP 8105

1 HR EXT WD - CEM PLASTER 7

3" = 1'-0"

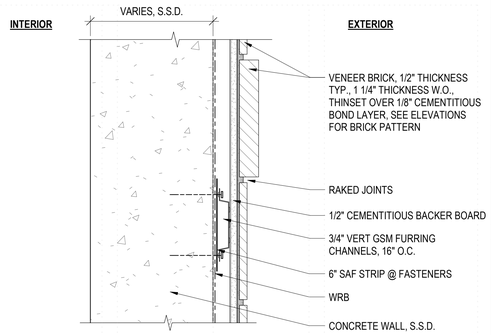

1-4 HR FR	CBC (2019) TABLE 721.1(2) ITEM 4-1.1

EXT CONC - VENEER BRICK 3

3" = 1'-0"

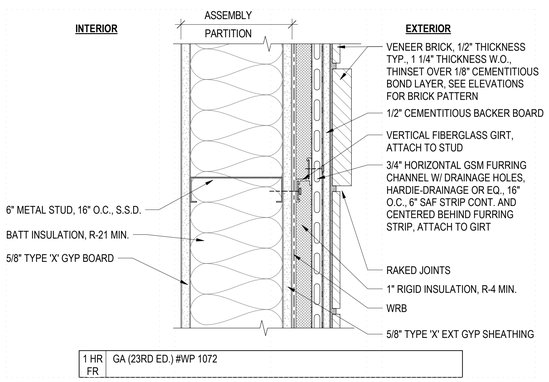

1 HR FR	GA (23RD ED.) #WP 1072

1 HR EXT MTL STUD - VENEER BRICK 10

3" = 1'-0"

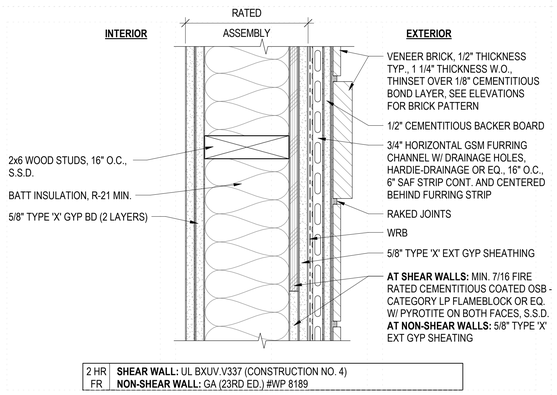

2 HR FR	**SHEAR WALL:** UL BXUV.V337 (CONSTRUCTION NO. 4) **NON-SHEAR WALL:** GA (23RD ED.) #WP 8189

2 HR EXT WD STUD - VENEER BRICK 6

3" = 1'-0"

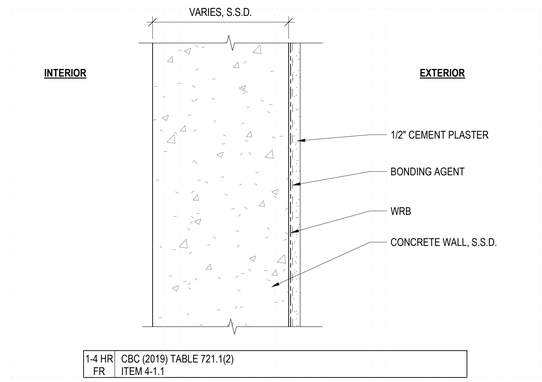

1-4 HR FR	CBC (2019) TABLE 721.1(2) ITEM 4-1.1

EXT CONC - CEM PLASTER 2

3" = 1'-0"

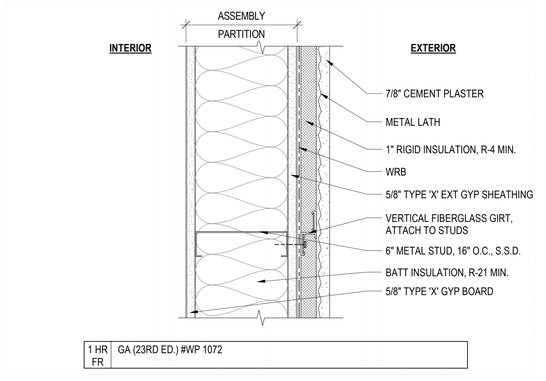

1 HR FR	GA (23RD ED.) #WP 1072

1 HR EXT MTL STUD - CEMENT PLASTER 9

3" = 1'-0"

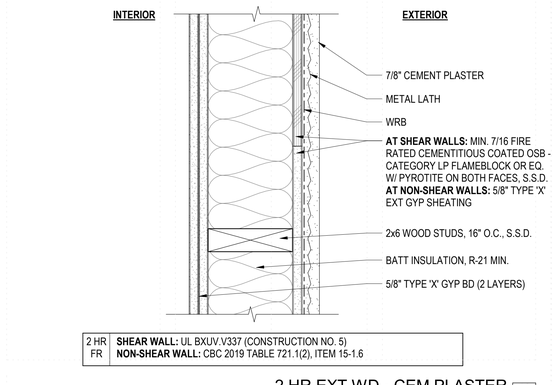

2 HR FR	**SHEAR WALL:** UL BXUV.V337 (CONSTRUCTION NO. 5) **NON-SHEAR WALL:** CBC 2019 TABLE 721.1(2), ITEM 15-1.6

2 HR EXT WD - CEM PLASTER 5

3" = 1'-0"

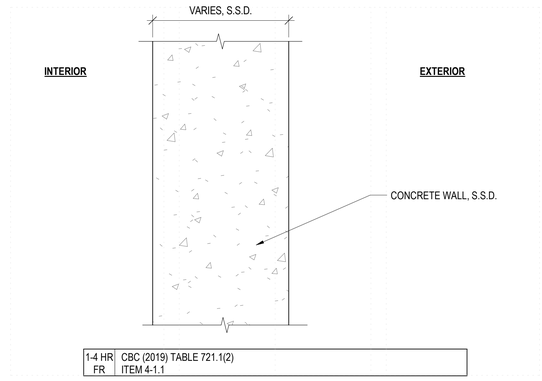

1-4 HR FR	CBC (2019) TABLE 721.1(2) ITEM 4-1.1

EXT CONC 1

3" = 1'-0"

WALL ASSEMBLY NOTES

1	WALL ASSEMBLIES ARE DIAGRAMMATIC AND NOT INTENDED AS CONSTRUCTION DETAILS. SEE ARCHITECTURAL BUILDING FLOOR PLANS AND UNIT PLANS FOR WALL ASSEMBLY LOCATIONS AND DESIGNATIONS.
2	ALL WALL FRAMING IS 16" O.C. - UNLESS OTHERWISE NOTED. REFER TO STRUCTURAL FRAMING PLANS, SHEAR WALL SCHEDULE AND DETAILS FOR DETAILED STRUCTURAL INFORMATION.
3	ADDITIONAL STRUCTURAL SHEATHING LAYERS MAY OCCUR AT INTERIOR AND EXTERIOR WALLS - SEE STRUCTURAL DRAWINGS FOR SIZE AND LOCATION OF STRL. SHEATHING. WHERE SHEATHING REQUIREMENTS FOR STRUCTURAL OR FIRE-RESISTANCE END MID-WALL, EXTEND LAYER TO NEAREST CORNER OR ADJACENT WALL.
4	FIRE-RATED WALLS AND PARTITIONS SHALL BE CONSTRUCTED IN ACCORDANCE WITH SYSTEM LISTING. CONSULT INDIVIDUAL LISTINGS FOR SPECIFIC REQUIREMENTS. STAGGER JOINTS OF GYPSUM BOARD WHERE MULTIPLE LAYERS OCCUR. DO NOT GLUE MULTIPLE LAYERS OF GYPSUM BOARD TOGETHER. REFER TO ASSEMBLY TEST REPORTS FOR ADDITIONAL DETAIL INSTALLATION REQUIREMENTS.
5	SEE SPECIFICATIONS SECTION 09 29 00 FOR ADDITIONAL REQUIREMENTS AT ACOUSTIC PARTITIONS.
6	WHERE THE WORD "PROPRIETARY" APPEARS IN THE SYSTEM DESCRIPTION, EACH PROPRIETARY SYSTEM SHALL BE CONSTRUCTED USING THE COMPONENTS SPECIFIED BY THE MANUFACTURER LISTED UNDER THE DETAILED DESCRIPTION FOR THAT SYSTEM.
7	EXTEND GYPSUM BOARD LAYERS ABOVE DROPPED CEILINGS TO STRUCTURE - UNLESS OTHERWISE NOTED.
8	SEE EXTERIOR DETAILS FOR DETAILED INFORMATION REGARDING EXTERIOR WALL WATERPROOFING LAYERS - BUILDING PAPER, FLEXIBLE FLASHING, ETC.
9	FIREBLOCKING NOT REQUIRED PER CBC 708.4. WALL, FLOOR/CEILING AND ROOF/CEILING ASSEMBLIES SHALL COMPLY AS REQUIRED WITH CBC CHAPTER 7: FIRE-RESISTANT MATERIALS AND CONSTRUCTION, AND ALL APPLICABLE LOCAL AND MUNICIPAL CODES.
10	ATYPICAL PARTITION TYPES ARE KEYED ON THE BUILDING AND UNIT FLOOR PLANS. FOR TYPICAL PARTITION TYPES, SEE LEGEND ON PLANS.
11	ALL ELECTRICAL BOXES AND RECESSED DEVICES IN ACOUSTIC WALL ASSEMBLIES ARE TO BE WRAPPED WITH LOWRY PADS AND SEALED WITH ACOUSTICAL SEALANT ALL AROUND AFTER GYPSUM BOARD INSTALLATION. SPACE MINIMUM 24" APART. GYPSUM BOARD AROUND ELECTRICAL BOXES TO BE HELD BACK 1/4" AND SEALED WITH ACOUSTICAL SEALANT. 24-INCH SPACING IS REQUIRED ONLY WHERE ELECTRICAL BOXES ARE ON OPPOSITE SIDES OF ACOUSTIC PARTITIONS.
12	ALL PENETRATIONS THROUGH FIRE-RATED ASSEMBLIES ARE TO RECEIVE FIRE CAULKING. FIRE CAULKING SHALL MEET ACOUSTICAL REQUIREMENTS AT PARTY WALLS AND FLOORS.
13	ACOUSTIC ASSEMBLIES ARE NOTED WITH MINIMUM STC RATING. PROVIDE ACOUSTICAL INSULATION AS DESCRIBED IN SPECIFICATIONS.
14	G.A. FILE NUMBERS REFER TO GYPSUM ASSOCIATION FIRE RESISTANCE DESIGN MANUAL, 21ST EDITION.
15	FRAMING CONTRACTOR TO REVIEW AND BE RESPONSIBILE FOR ALL NOTATIONS OF FINISH ALIGNMENTS IN DRAWINGS. MISALIGNED FRAMING TO BE CORRECTED AT CONTRACTOR'S EXPENSE.
16	PROVIDE MOISTURE-RESISTANT GYPSUM BOARD AT ALL WALLS TO RECEIVE TILE FINISH. FOR WALL ASSEMBLIES AT 1 HR. FIRE-RESISTIVE CONSTRUCTION AT TUBS AND SHOWERS, EXTEND TYPE 'X' GYPSUM BOARD TO BOTTOM OF BASE PLATE TO ACHIEVE FIRE RATING. USE WATER-RESISTANT GYPSUM BOARD OVER SUCH TYPE 'X' LAYER AS REQUIRED.
17	FOR INSULATION TYPE AND R-VALUE, SEE ENERGY COMPLIANCE DOCUMENT AND CALCULATIONS.
18	SEE ARCHITECTURAL ELEVATIONS FOR EXTERIOR FINISHES.
19	U.O.N. EXTERIOR FINISH SYSTEMS TO INCLUDE WEATHER-RESISTIVE BARRIER (I.E. BUILDING PAPER OR FELT, 15# MIN., TYP.)

FIRE RATED WALL ASSEMBLY NOTES

1	SHAFT ENCLOSURES: SHALL HAVE A FIRE-RESISTANCE RATING OF NOT LESS THAN 2 HOURS WHERE CONNECTING FOUR STORIES OR MORE, AND NOT LESS THAN 1 HOUR WHERE CONNECTING LESS THAN FOUR STORIES PER CBC 713.4
2	INTERIOR EXIT STAIRWAY ENCLOSURES: SHALL HAVE A FIRE-RESISTANCE RATING OF NOT LESS THAN 2 HOURS WHERE CONNECTING FOUR STORIES OR MORE AND NOT LESS THAN 1 HOUR WHERE CONNECTING LESS THAN FOUR STORIES. PER CBC 707.3.2 AND 1023.2
3	EXTERIOR WALLS (LOAD BEARING): 1-HR WHERE REQUIRED BASED ON FIRE SEPARATION DISTANCE PER CBC TABLE 602 FOR TYPE VA CONSTRUCTION.
4	EXTERIOR WALLS (NON-LOAD BEARING): 1-HR WHERE REQUIRED BASED ON FIRE SEPARATION DISTANCE PER CBC TABLE 602 FOR TYPE VA CONSTRUCTION.
5	DEMISING WALLS: PARTY WALLS SEPARATING DWELLING UNITS SHALL BE FIRE PARTITIONS CONSISTING OF 1-HR FIRE-RESISTIVE CONSTRUCTION AS REQUIRED BY 2016 CBC 420.2.
6	CORRIDOR WALLS: CORRIDOR WALLS SHALL BE OF 1-HR FIRE-RESISTIVE CONSTRUCTION AS REQUIRED BY 2016 CBC 1020.1.
7	FIRE WALLS: AT HORIZONTAL EXITS SHALL HAVE 2-HR FIRE-RESISTIVE CONSTRUCTION PER 2016 CBC SECTION 707.3.5
8	FIRE BARRIERS: AT OCCUPANCY SEPARATIONS SHALL HAVE 2-HR FIRE-RESISTIVE CONSTRUCTION PER 2016 CBC SECTION 707.3.9
9	PRIMARY STRUCTURAL FRAME MEMBERS CONSTRUCTED OF STEEL SHALL MEET REQUIRED FIRE PROTECTION RATINGS USING INTUMESCENT PAINT, PER ARCHITECTURAL DETAILS. REQUIRED RATINGS OF SUCH MEMBERS ARE 1 HOUR IN TYPE V CONSTRUCTION AND 3 HOURS IN TYPE I CONSTRUCTION.
10	FIRE BLOCKING / DRAFT STOPPING SHALL BE INSTALLED IN COMBUSTIBLE CONCEALED LOCATIONS IN ACCORDANCE WITH 2016 CBC SECTION 718. FIRE BLOCKING SHALL BE PROVIDED IN CONCEALED SPACES OF STUD WALLS AND PARTITIONS, INCLUDING FURRED SPACES; VERTICALLY AT THE CEILING AND FLOOR LEVELS AND HORIZONTALLY AT INTERVALS NOT EXCEEDING 10 FEET.
11	HORIZONTAL FIRE RESISTANCE RATED ASSEMBLIES SHALL BE CONTINUOUS IN ACCORDANCE WITH CBC SECTION 711.2 AND ALL GYPSUM BOARD WALL LAYERS SHALL EXTEND TO THE CEILING LAYERS OF HORIZONTAL ASSEMBLIES.

PYATOK
1611 TELEGRAPH AVE.
SUITE 200
OAKLAND, CA 94612
T. 510.465.7010 | F. 510.465.8575
www.pyatok.com

THE UNITY COUNCIL
1900 FRUITVALE AVE
#2A
OAKLAND, CA 94601

2700 INTERNATIONAL

OAKLAND, CA 94601

STAMP:

ISSUE SCHEDULE

100 SD	5/11/22
50 DD	7/15/22
100 DD	9/16/22
50 CD	11/18/22
PERMIT SET	12/09/22

REVISION SCHEDULE

NO.	ISSUE	DATE

JOB NUMBER:	1937
DRAWN BY:	MA, DV, TN, MO, SP
CHECKED BY:	Checker
ISSUE DATE:	12/09/22
SCALE:	3" = 1'-0"

TITLE:

WALL ASSEMBLIES - EXTERIOR

SHEET:

A9.00

PRELIMINARY - Not for Construction -

© 2019 PYATOK ARCHITECTURE & URBAN DESIGN

12/8/2022 6:12:31 PM

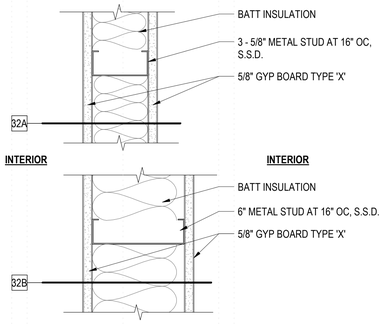

1 HR FR	GA (23RD ED.) #WP 1072	STC 40	NGC 2013004

1 HR INT MTL STUD **32**
3" = 1'-0"

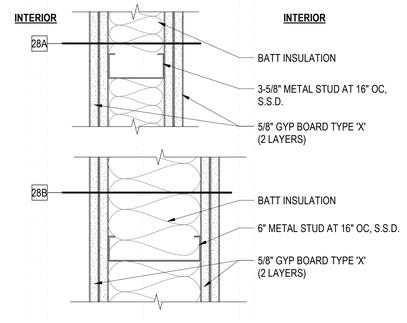

2 HR FR	GA (23RD ED.) #WP 1522	STC 55-59	NRCC TL-92-369

2 HR INT MTL STUD **28**
3" = 1'-0"

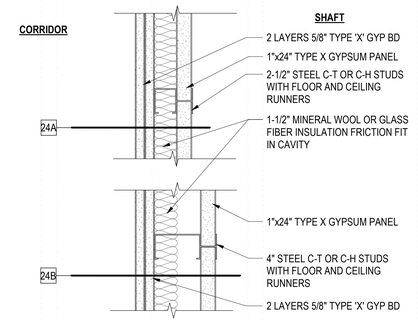

2 HR FR	GA (23RD ED.) #WP 7066.4 (PROPRIETARY)	STC 50-54	NOAL 19-0945, 9-25-19 (4B ONLY)

2 HR SHAFT CLOSURE WALL **24**
3" = 1'-0"

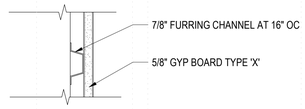

NR			

INT MTL CHANNEL FURRING WALL **35**
3" = 1'-0"

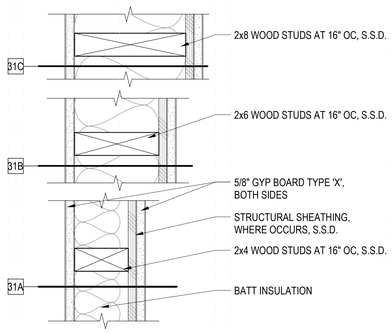

1 HR FR	GA (23RD ED.) #WP 3605		

1 HR INT WD STUD **31**
3" = 1'-0"

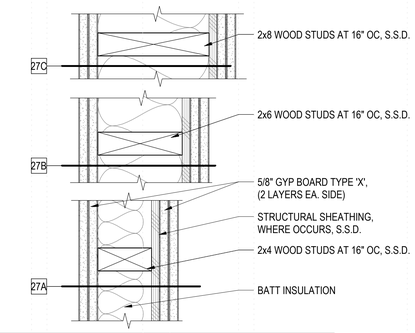

2 HR FR	GA (23RD ED.) #WP 4136		

2 HR INT WD STUD **27**
3" = 1'-0"

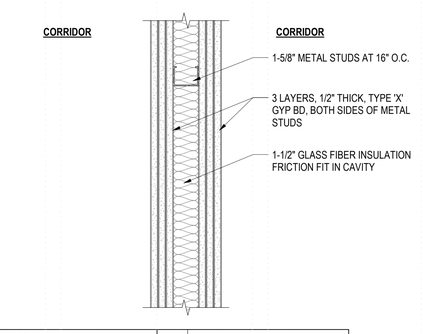

3 HR FR	GA (23RD ED.) #WP 2922 UL DESIGN No. U435 (PROPRIETARY)	STC 55-59	NOAL 20-0302, 3-30-20

3 HR FIRE WALL, CROSS CORRIDOR **23**
3" = 1'-0"

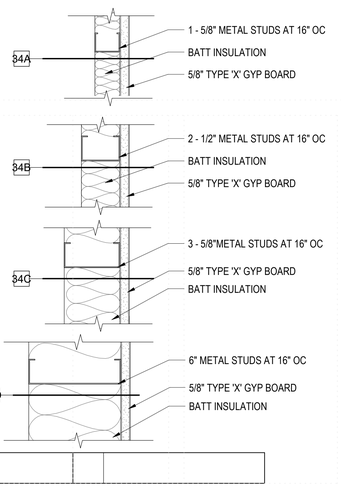

NR			

INT MTL STUD FURRING WALL **34**
3" = 1'-0"

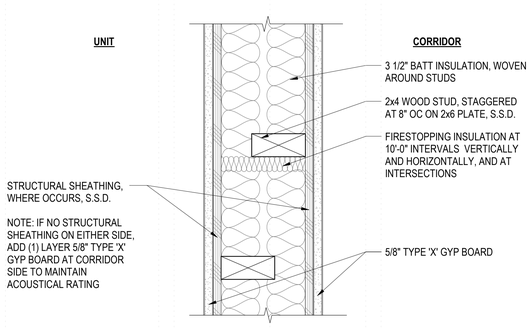

1 HR FR	GA (23RD ED.) #WP 3371	STC 52	NRC-CNRC TL-93-226

1 HR INT WD STAGGERED STUD AT CORRIDOR **30**
3" = 1'-0"

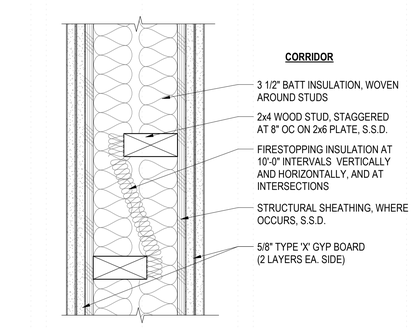

2 HR FR	GA (23RD ED.) #WP 3910	STC 56	NRC-CNRC TL-93-227

2 HR INT WD STAGGERED STUD AT CORRIDOR **26**
3" = 1'-0"

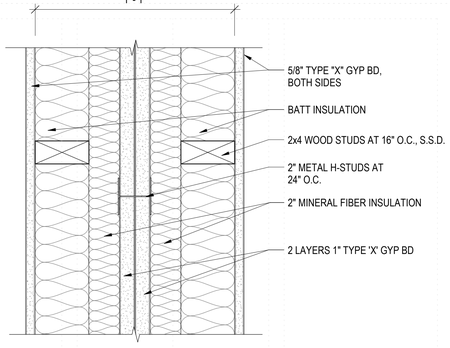

3 HR FR	GA FILE NO. ASW 2600 (PROPRIETARY)	STC 50 MIN.	

3 HR FIRE WALL, TYPICAL **22**
3" = 1'-0"

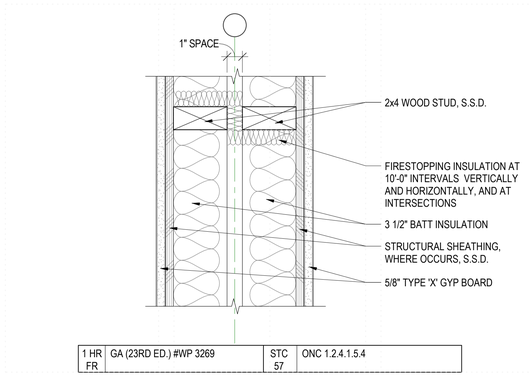

1 HR FR	GA (23RD ED.) #WP 3269	STC 57	ONC 1.2.4.1.5.4

1 HR INT WD DOUBLE STUD PARTY WALL **29**
3" = 1'-0"

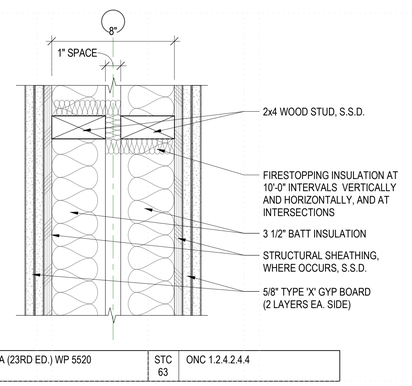

2 HR FR	GA (23RD ED.) WP 5520	STC 63	ONC 1.2.4.2.4.4

2 HR INT WD DOUBLE STUD PARTY WALL **25**
3" = 1'-0"

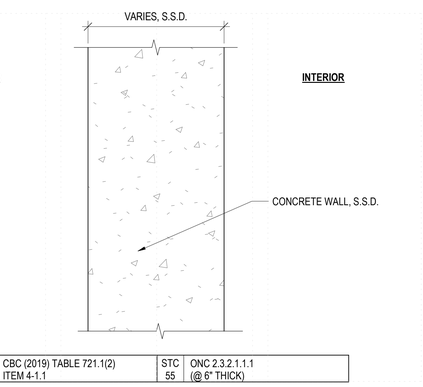

1-4 HR FR	CBC (2019) TABLE 721.1(2) ITEM 4-1.1	STC 55	ONC 2.3.2.1.1.1 (@ 6" THICK)

INT CONC **21**
3" = 1'-0"

PYATOK
1611 TELEGRAPH AVE.
SUITE 200
OAKLAND, CA 94612
T. 510.465.7010 | F. 510.465.8575
www.pyatok.com

THE UNITY COUNCIL
1900 FRUITVALE AVE
#2A
OAKLAND, CA 94601

2700 INTERNATIONAL

OAKLAND, CA 94601

STAMP:

LICENSED ARCHITECT
PETER WALLER
C-25554
REGISTERED
4/30/2023
STATE OF CALIFORNIA

ISSUE SCHEDULE

100 SD	5/11/22
50 DD	7/15/22
100 DD	9/16/22
50 CD	11/18/22
PERMIT SET	12/09/22

REVISION SCHEDULE

NO.	ISSUE	DATE

JOB NUMBER:	1937
DRAWN BY:	MA, DV, TN, MO, SP
CHECKED BY:	Checker
ISSUE DATE:	12/09/22
SCALE:	3" = 1'-0"

TITLE:

WALL ASSEMBLIES - INTERIOR

SHEET:

A9.01

PRELIMINARY - Not for Construction -

© 2019 PYATOK ARCHITECTURE & URBAN DESIGN

12/8/2022 6:12:35 PM

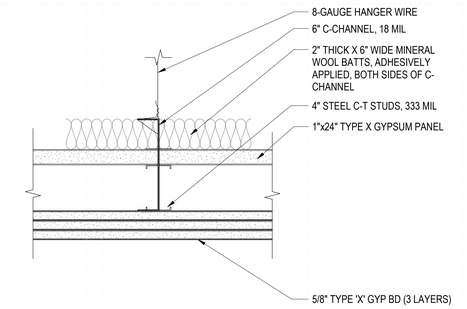

2 HR FR	GA (23RD ED.) #HM 7201 (PROPRIETARY)	

2 HR CEILING J
3" = 1'-0"

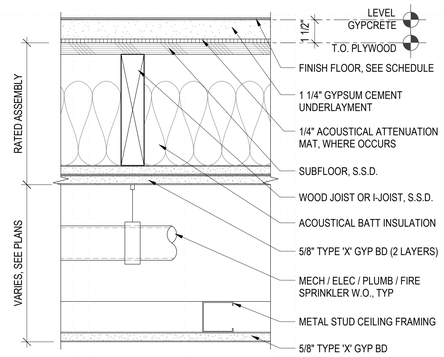

1 HR FR	GA (23RD ED.) #FC 5529	STC 50 MIN.	IIC 50 MIN.

1 HR WOOD FRAME FLOOR AT CORRIDOR G
3" = 1'-0"

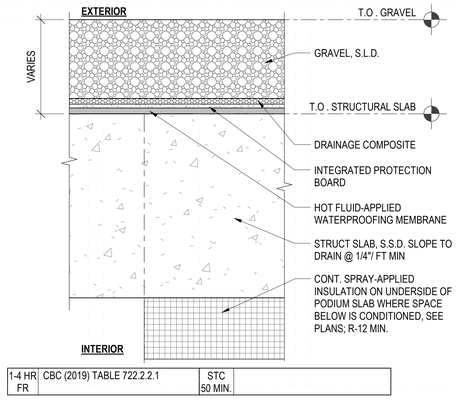

1-4 HR FR	CBC (2019) TABLE 722.2.2.1	STC 50 MIN.	

STRUCTURAL PT PODIUM SLAB W/ GRAVEL D
3" = 1'-0"

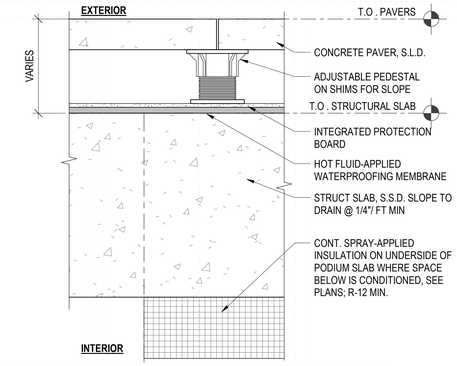

1-4 HR FR	CBC (2019) TABLE 722.2.2.1	STC 50 MIN.	

STRUCTURAL PT PODIUM SLAB W/ PAVERS C
3" = 1'-0"

FLOOR ASSEMBLY NOTES

1	FLOOR ASSEMBLIES ARE DIAGRAMMATIC AND NOT INTENDED AS CONSTRUCTION DETAILS. SEE BUILDING AND WALL SECTIONS FOR FLOOR/CEILING AND ROOF/CEILING ASSEMBLY LOCATIONS.
2	SEE STRUCTURAL DRAWINGS FOR ALL SPACING AND DETAILED STRUCTURAL INFORMATION.
3	FIRE-RATED ASSEMBLIES SHALL BE CONSTRUCTED IN ACCORDANCE WITH SYSTEM LISTING. CONSULT INDIVIDUAL LISTINGS FOR SPECIFIC REQUIREMENTS. REFER TO ASSEMBLY TEST REPORTS FOR ADDITIONAL DETAILED INSTALLATION REQUIREMENTS.
4	SEE EXTERIOR DETAILS FOR DETAILED INFORMATION REGARDING WATERPROOFING LAYERS.
5	ALL PENETRATIONS THROUGH FIRE-RATED ASSEMBLIES ARE TO RECEIVE FIRE CAULKING. FIRE CAULKING SHALL MEET ACOUSTICAL REQUIREMENTS AT PARTY WALLS AND FLOORS.
6	ACOUSTIC ASSEMBLIES ARE NOTED WITH MINIMUM STC RATING. PROVIDE ACOUSTICAL INSULATION AS DESCRIBED IN SPECIFICATIONS.
7	G.A. FILE NUMBERS REFER TO GYPSUM ASSOCIATION FIRE RESISTANCE DESIGN MANUAL.
8	FRAMING CONTRACTOR TO REVIEW AND BE RESPONSIBILE FOR ALL NOTATIONS OF FINISH ALIGNMENTS IN DRAWINGS. MISALIGNED FRAMING TO BE CORRECTED AT CONTRACTOR'S EXPENSE.
9	PROVIDE MOISTURE-RESISTANT GYPSUM BOARD AT ALL ASSEMBLIES TO RECEIVE TILE FINISH.
10	FOR INSULATION TYPE AND R-VALUE, SEE ENERGY COMPLIANCE DOCUMENTS AND CALCULATIONS.
11	WALL, FLOOR/CEILING AND ROOF/CEILING ASSEMBLIES SHALL COMPLY WITH THE CBC CHAPTER 7 AND ALL APPLICABLE LOCAL MUNICIPAL CODES.

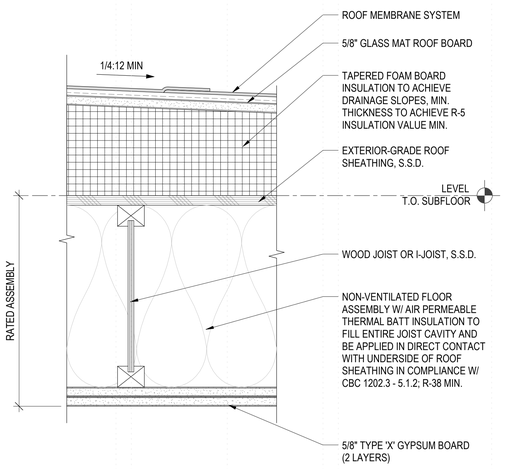

1 HR FR	CBC (2019) TABLE 721.1(3) ITEM 21-1.1	

ADHERED MEMBRANE ROOFING ASSEMBLY H
3" = 1'-0"

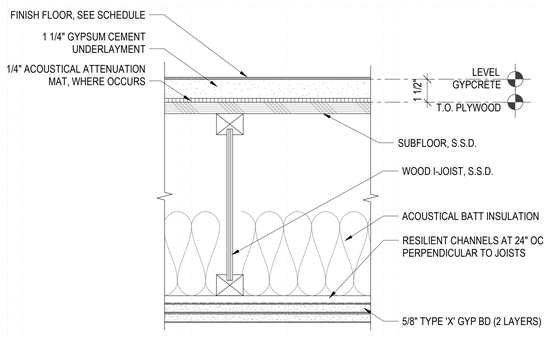

1 HR FR	GA (23RD ED.) #FC 5241	STC 50 MIN.	IIC 50 MIN.

TYPICAL 1 HR WOOD FRAME FLOOR F
3" = 1'-0"

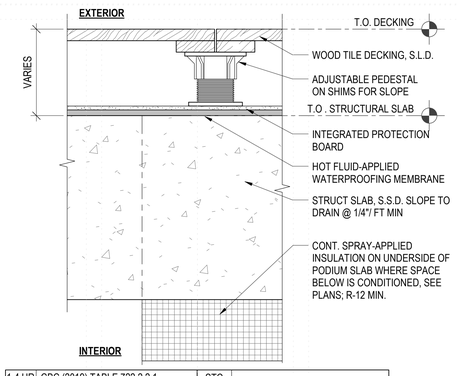

1-4 HR FR	CBC (2019) TABLE 722.2.2.1	STC 50 MIN.	

STRUCTURAL PT PODIUM SLAB W/ DECKING E
3" = 1'-0"

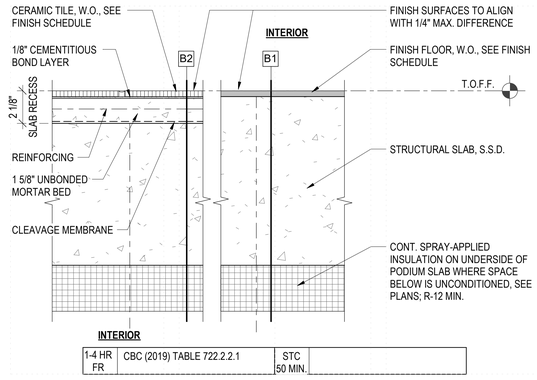

1-4 HR FR	CBC (2019) TABLE 722.2.2.1	STC 50 MIN.	

STRUCTURAL PT PODIUM SLAB B
3" = 1'-0"

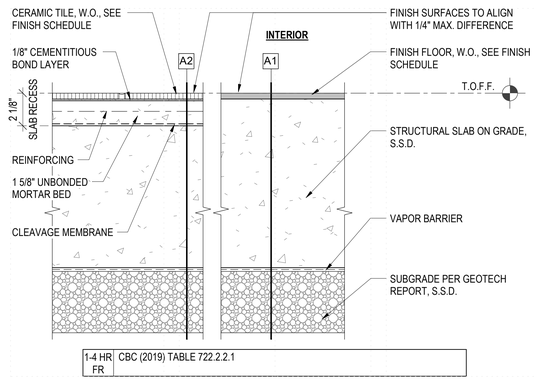

1-4 HR FR	CBC (2019) TABLE 722.2.2.1		

STRUCTURAL SLAB ON GRADE A
3" = 1'-0"

PYATOK
1611 TELEGRAPH AVE.
SUITE 200
OAKLAND, CA 94612
T. 510.465.7010 | F. 510.465.8575
www.pyatok.com

THE UNITY COUNCIL
1900 FRUITVALE AVE
#2A
OAKLAND, CA 94601

2700 INTERNATIONAL
OAKLAND, CA 94601

STAMP:

LICENSED ARCHITECT — PETER WALLER — C-23554 — 4/30/2023 — STATE OF CALIFORNIA

ISSUE SCHEDULE

100 SD	5/11/22
50 DD	7/15/22
100 DD	9/16/22
50 CD	11/18/22
PERMIT SET	12/09/22

REVISION SCHEDULE

NO.	ISSUE	DATE

JOB NUMBER:	1937
DRAWN BY:	MA, DV, TN, MO, SP
CHECKED BY:	Checker
ISSUE DATE:	12/09/22
SCALE:	3" = 1'-0"

TITLE:
FLOOR AND ROOF ASSEMBLIES

SHEET:
A9.05

PRELIMINARY - Not for Construction -

© 2019 PYATOK ARCHITECTURE & URBAN DESIGN

12/8/2022 6:12:39 PM

DOOR SCHEDULE - COMMON AREAS

MARK	LOCATION ROOM	DIMENSIONS WIDTH	HEIGHT	THICKNESS	LEAF TYPE	MATERIAL	FINISH	# OF LEAVES	FRAME TYPE	MATERIAL	FINISH	GLAZING TYPE	OITC	STC	SIDELIGHT TYPE	HEIGHT	WIDTH	DETAILS HEAD	SILL	JAMB	HARDWARE LATCH	CLOSER	CARD READER	EXIT DEVICE	HOLD OPEN	HARDWARE GROUP	FIRE RATING	COMMENTS
LEVEL 1																												
102	FIRE COMMAND CENTER	3' - 0"	7' - 0"	0' - 1 3/4"	F	HM	PTD	1	1	STL	PTD					0' - 0"	0' - 0"				●	●					90 MIN.	
104	PROPERTY MANAGEMENT	3' - 0"	8' - 0"	0' - 3 1/2"	FG	AL/G	FF/DB	1	8	AL	FF/DB	T									●	●					--	
105	PACKAGE ROOM	3' - 0"	8' - 0"	0' - 1 3/4"	FG	HM/G	PTD	1	1	STL	PTD	T				0' - 0"	0' - 0"				●	●					20 MIN.	
106	PROPERTY MANAGEMENT	3' - 0"	8' - 0"	0' - 1 3/4"	FG	HM/G	PTD	1	1	STL	PTD	T				0' - 0"	0' - 0"				●	●					-	
107	PACKAGE ROOM	3' - 0"	8' - 0"	0' - 1 3/4"	FG	HM/G	PTD	1	1	STL	PTD	T				0' - 0"	0' - 0"				●	●					20 MIN.	
108	SERVER	3' - 0"	7' - 0"	0' - 1 3/4"	F	HM	PTD	1	1	STL	PTD					0' - 0"	0' - 0"				●	●					-	
109	WATER CLOSET	3' - 0"	7' - 0"	0' - 1 3/4"	FG	HM/G	PTD	1	1	STL	PTD	T				0' - 0"	0' - 0"				●	●					-	
110	STORAGE/COPY	3' - 0"	8' - 0"	0' - 1 3/4"	FG	HM/G	PTD	1	1	STL	PTD	T				7' - 10"	1' - 10"				●	●	●	●			-	DOOR W/ SIDELITE
111B	BREAK ROOM	3' - 0"	8' - 0"	0' - 1 3/4"	FG	HM/G	PTD	1	1	STL	PTD	T				7' - 10"	1' - 10"				●	●	●	●			-	DOOR W/ SIDELITE
112	SERVICE OFFICE	3' - 0"	7' - 0"	0' - 1 3/4"	FG	HM/G	PTD	1	1	STL	PTD	T				0' - 0"	0' - 0"				●	●					-	
112B	ATORAGE	3' - 0"	8' - 0"	0' - 1 3/4"	FG	HM/G	PTD	1	1	STL	PTD	T				0' - 0"	0' - 0"				●	●					45 MIN.	
113	SERVICE OFFICE	3' - 0"	7' - 0"	0' - 1 3/4"	FG	HM/G	PTD	1	1	STL	PTD	T				0' - 0"	0' - 0"				●	●					-	
114	STORAGE	3' - 0"	7' - 0"	0' - 1 3/4"	FG	HM/G	PTD	1	1	STL	PTD	T				0' - 0"	0' - 0"				●	●					45 MIN.	
115	WATER CLOSET	3' - 0"	7' - 0"	0' - 1 3/4"	FG	HM/G	PTD	1	1	STL	PTD	T				0' - 0"	0' - 0"				●	●					20 MIN.	
116	LOBBY	3' - 0"	7' - 0"	0' - 1 3/4"	F	HM	PTD	1	1	STL	PTD					0' - 0"	0' - 0"				●	●	●				20 MIN.	
117	MAINTENANCE	3' - 0"	7' - 0"	0' - 1 3/4"	FG	HM/G	PTD	1	1	STL	PTD	T				0' - 0"	0' - 0"				●	●					-	
118	MAINTENANCE	3' - 0"	7' - 0"	0' - 1 3/4"	FG	HM/G	PTD	1	1	STL	PTD	T				0' - 0"	0' - 0"				●	●					-	
119	WATER CLOSET	3' - 0"	7' - 0"	0' - 1 3/4"	FG	HM/G	PTD	1	1	STL	PTD	T				0' - 0"	0' - 0"				●	●					20 MIN.	
120	WATER CLOSET	3' - 0"	7' - 0"	0' - 1 3/4"	FG	HM/G	PTD	1	1	STL	PTD	T				0' - 0"	0' - 0"				●	●					20 MIN.	
121	CORRIDOR	3' - 0"	7' - 0"	0' - 1 3/4"	F	HM	PTD	1	1	STL	PTD					0' - 0"	0' - 0"				●	●	●				20 MIN.	
122B	COMMERCIAL	3' - 0"	7' - 0"	0' - 1 3/4"	F	HM	PTD	1	1	STL	PTD					0' - 0"	0' - 0"				●	●	●	●			20 MIN.	
123B	COMMERCIAL	3' - 0"	7' - 0"	0' - 1 3/4"	F	HM	PTD	1	1	STL	PTD					0' - 0"	0' - 0"				●	●	●	●			20 MIN.	
125	WATER CLOSET	3' - 0"	7' - 0"	0' - 1 3/4"	F	HM	PTD	1	1	STL	PTD					0' - 0"	0' - 0"				●	●					-	
125B	COMMERCIAL	3' - 0"	7' - 0"	0' - 1 3/4"	F	HM	PTD	1	1	STL	PTD					0' - 0"	0' - 0"				●	●	●	●			20 MIN.	
126	MECHANICAL	6' - 0"	7' - 0"	0' - 1 3/4"	DF	HM	PTD	2	1	STL	PTD					0' - 0"	0' - 0"				●	●					20 MIN.	
127	BIKE ROOM	3' - 0"	7' - 0"	0' - 1 3/4"	F	HM	PTD	1	1	STL	PTD					0' - 0"	0' - 0"				●	●	●				-	
128	MAINTENANCE	6' - 0"	7' - 0"	0' - 1 3/4"	DF	HM	PTD	2	1	STL	PTD					0' - 0"	0' - 0"				●	●					-	
129	TRASH	3' - 6"	7' - 0"	0' - 1 3/4"	F	HM	PTD	1	1	STL	PTD					0' - 0"	0' - 0"				●	●	●				90 MIN.	
130	FIRE PUMP	6' - 0"	7' - 0"	0' - 1 3/4"	DF	HM	PTD	2	1	STL	PTD					0' - 0"	0' - 0"				●	●					-	
130A	ELECTRICAL	3' - 0"	7' - 0"	0' - 1 3/4"	F	HM	PTD	1	1	STL	PTD					0' - 0"	0' - 0"				●	●		●			-	
130B	ELECTRICAL	3' - 0"	7' - 0"	0' - 1 3/4"	F	HM	PTD	1	1	STL	PTD					0' - 0"	0' - 0"				●	●		●			90 MIN.	
131A	GARAGE	3' - 0"	7' - 0"	0' - 1 3/4"	F	HM	PTD	1	1	STL	PTD					0' - 0"	0' - 0"				●	●					45 MIN.	
EL1.1	ELEVATOR	3' - 6"	7' - 0"	0' - 1 3/4"	SG	STL	FF	1	1	STL	FF	--											●				90 MIN.	
EL1.2	ELEVATOR	3' - 6"	7' - 0"	0' - 1 3/4"	SG	STL	FF	1	1	STL	FF	--											●				90 MIN.	
S1	STAIR 2	3' - 6"	7' - 0"	0' - 1 3/4"	F	HM	PTD	1	1	STL	PTD					0' - 0"	0' - 0"				●	●	●	●			90 MIN.	
S2.1A	STAIR 2	3' - 0"	7' - 0"	0' - 1 3/4"	F	HM	PTD	1	1	STL	PTD					0' - 0"	0' - 0"				●	●	●	●			90 MIN.	
S2.1B	STAIR 2	3' - 0"	7' - 0"	0' - 1 3/4"	F	HM	PTD	1	1	STL	PTD					0' - 0"	0' - 0"				●	●		●			-	
LEVEL 2																												
200A	CORRIDOR	3' - 0"	7' - 0"	0' - 1 3/4"	FG	HM/G	PTD	1	1	STL	PTD	T				0' - 0"	0' - 0"				●	●	●	●			20 MIN.	
200B	CORRIDOR	3' - 0"	7' - 0"	0' - 1 3/4"	F	HM	PTD	1	1	STL	PTD					0' - 0"	0' - 0"				●	●	●	●			180 MIN.	
210A	LAUNDRY	3' - 0"	7' - 0"	0' - 1 3/4"	FG	HM/G	PTD	1	1	STL	PTD	T				0' - 0"	0' - 0"				●	●	●				20 MIN.	
211	WATER CLOSET	3' - 0"	7' - 0"	0' - 1 3/4"	F	HM	PTD	1	1	STL	PTD					0' - 0"	0' - 0"				●	●					20 MIN.	
212C	COMMUNITY ROOM	3' - 0"	8' - 0"	0' - 1 3/4"	FG	HM/G	PTD	1	1	STL	PTD	T				0' - 0"	0' - 0"				●	●					20 MIN.	
212D	COMMUNITY ROOM	3' - 0"	7' - 0"	0' - 1 3/4"	F	HM	PTD	1	1	STL	PTD					0' - 0"	0' - 0"				●						-	
212E	JANITOR'S CLOSET	3' - 0"	7' - 0"	0' - 1 3/4"	F	HM	PTD	1	1	STL	PTD					0' - 0"	0' - 0"				●	●					20 MIN.	
220	WASTE	3' - 0"	7' - 0"	0' - 1 3/4"	F	HM	PTD	1	1	STL	PTD					0' - 0"	0' - 0"				●	●					45 MIN.	
221	ELECTRICAL	6' - 0"	7' - 0"	0' - 1 3/4"	DF	HM	PTD	2	1	STL	PTD					0' - 0"	0' - 0"				●	●					90 MIN.	
222	ELECTRICAL	3' - 0"	7' - 0"	0' - 1 3/4"	F	HM	PTD	1	1	STL	PTD					0' - 0"	0' - 0"				●	●					90 MIN.	
EL2.1	ELEVATOR	3' - 6"	7' - 0"	0' - 1 3/4"	SG	STL	FF	1	1	STL	FF	--											●				90 MIN.	
EL2.2	ELEVATOR	3' - 6"	7' - 0"	0' - 1 3/4"	SG	STL	FF	1	1	STL	FF	--											●				90 MIN.	
S1.2	STAIR 1	3' - 0"	7' - 0"	0' - 1 3/4"	F	HM	PTD	1	1	STL	PTD					0' - 0"	0' - 0"				●	●		●			90 MIN.	
S2.2	STAIR 2	3' - 0"	7' - 0"	0' - 1 3/4"	F	HM	PTD	1	1	STL	PTD					0' - 0"	0' - 0"				●	●		●			90 MIN.	
LEVEL 3																												
300	CORRIDOR	6' - 0"	7' - 0"	0' - 1 3/4"	DF	HM	PTD	2	1	STL	PTD					0' - 0"	0' - 0"				●	●	●	●	●		180 MIN.	
320	WASTE	3' - 0"	7' - 0"	0' - 1 3/4"	F	HM	PTD	1	1	STL	PTD					0' - 0"	0' - 0"				●	●					45 MIN.	
321	ELECTRICAL	6' - 0"	7' - 0"	0' - 1 3/4"	DF	HM	PTD	2	1	STL	PTD					0' - 0"	0' - 0"				●	●					90 MIN.	
322	ELECTRICAL	3' - 0"	7' - 0"	0' - 1 3/4"	F	HM	PTD	1	1	STL	PTD					0' - 0"	0' - 0"				●	●					90 MIN.	
EL3.1	ELEVATOR	3' - 6"	7' - 0"	0' - 1 3/4"	SG	STL	FF	1	1	STL	FF	--											●				90 MIN.	
EL3.2	ELEVATOR	3' - 6"	7' - 0"	0' - 1 3/4"	SG	STL	FF	1	1	STL	FF	--											●				90 MIN.	
S1.3	STAIR 1	3' - 0"	7' - 0"	0' - 1 3/4"	F	HM	PTD	1	1	STL	PTD					0' - 0"	0' - 0"				●	●		●			90 MIN.	
S2.3	STAIR 2	3' - 0"	7' - 0"	0' - 1 3/4"	F	HM	PTD	1	1	STL	PTD					0' - 0"	0' - 0"				●	●		●			90 MIN.	
LEVEL 4																												
400	CORRIDOR	6' - 0"	7' - 0"	0' - 1 3/4"	DF	HM	PTD	2	1	STL	PTD					0' - 0"	0' - 0"				●	●	●	●	●		180 MIN.	
400B	CORRIDOR	3' - 0"	7' - 0"	0' - 1 3/4"	F	HM	PTD	1	1	STL	PTD					0' - 0"	0' - 0"				●	●					-	
420	WASTE	3' - 0"	7' - 0"	0' - 1 3/4"	F	HM	PTD	1	1	STL	PTD					0' - 0"	0' - 0"				●	●					45 MIN.	
421	ELECTRICAL	6' - 0"	7' - 0"	0' - 1 3/4"	DF	HM	PTD	2	1	STL	PTD					0' - 0"	0' - 0"				●	●					90 MIN.	
422	ELECTRICAL	3' - 0"	7' - 0"	0' - 1 3/4"	F	HM	PTD	1	1	STL	PTD					0' - 0"	0' - 0"				●	●					90 MIN.	
EL4.1	ELEVATOR	3' - 6"	7' - 0"	0' - 1 3/4"	SG	STL	FF	1	1	STL	FF	--											●				90 MIN.	
EL4.2	ELEVATOR	3' - 6"	7' - 0"	0' - 1 3/4"	SG	STL	FF	1	1	STL	FF	--											●				90 MIN.	
S1.4	STAIR 1	3' - 0"	7' - 0"	0' - 1 3/4"	F	HM	PTD	1	1	STL	PTD					0' - 0"	0' - 0"				●	●		●			90 MIN.	
S2.4	STAIR 2	3' - 0"	7' - 0"	0' - 1 3/4"	F	HM	PTD	1	1	STL	PTD					0' - 0"	0' - 0"				●	●		●			90 MIN.	
LEVEL 5																												
500A	CORRIDOR	6' - 0"	7' - 0"	0' - 1 3/4"	DF	HM	PTD	2	1	STL	PTD					0' - 0"	0' - 0"				●	●	●	●	●		180 MIN.	
500B	CORRIDOR	3' - 0"	7' - 0"	0' - 1 3/4"	F	HM	PTD	1	1	STL	PTD					0' - 0"	0' - 0"				●	●					-	
520	WASTE	3' - 0"	7' - 0"	0' - 1 3/4"	F	HM	PTD	1	1	STL	PTD					0' - 0"	0' - 0"				●	●					45 MIN.	
521	ELECTRICAL	6' - 0"	7' - 0"	0' - 1 3/4"	DF	HM	PTD	2	1	STL	PTD					0' - 0"	0' - 0"				●	●					90 MIN.	
522	ELECTRICAL	3' - 0"	7' - 0"	0' - 1 3/4"	F	HM	PTD	1	1	STL	PTD					0' - 0"	0' - 0"				●	●					90 MIN.	
EL5.1	ELEVATOR	3' - 6"	7' - 0"	0' - 1 3/4"	SG	STL	FF	1	1	STL	FF	--											●				90 MIN.	
EL5.2	ELEVATOR	3' - 6"	7' - 0"	0' - 1 3/4"	SG	STL	FF	1	1	STL	FF	--											●				90 MIN.	
S1.5	STAIR 1	3' - 0"	7' - 0"	0' - 1 3/4"	F	HM	PTD	1	1	STL	PTD					0' - 0"	0' - 0"				●	●		●			90 MIN.	
S2.5	STAIR 2	3' - 0"	7' - 0"	0' - 1 3/4"	F	HM	PTD	1	1	STL	PTD					0' - 0"	0' - 0"				●	●		●			90 MIN.	
LEVEL 6																												
600	CORRIDOR	6' - 0"	7' - 0"	0' - 1 3/4"	DF	HM	PTD	2	1	STL	PTD					0' - 0"	0' - 0"				●	●	●	●	●		180 MIN.	
620	WASTE	3' - 0"	7' - 0"	0' - 1 3/4"	F	HM	PTD	1	1	STL	PTD					0' - 0"	0' - 0"				●	●					45 MIN.	
621	ELECTRICAL	6' - 0"	7' - 0"	0' - 1 3/4"	DF	HM	PTD	2	1	STL	PTD					0' - 0"	0' - 0"				●	●					90 MIN.	
622	ELECTRICAL	3' - 0"	7' - 0"	0' - 1 3/4"	F	HM	PTD	1	1	STL	PTD					0' - 0"	0' - 0"				●	●					90 MIN.	
EL6.1	ELEVATOR	3' - 6"	7' - 0"	0' - 1 3/4"	SG	STL	FF	1	1	STL	FF	--											●				90 MIN.	
EL6.2	ELEVATOR	3' - 6"	7' - 0"	0' - 1 3/4"	SG	STL	FF	1	1	STL	FF	--											●				90 MIN.	
S1.6	STAIR 1	3' - 0"	7' - 0"	0' - 1 3/4"	F	HM	PTD	1	1	STL	PTD					0' - 0"	0' - 0"				●	●		●			90 MIN.	
S2.6	STAIR 2	3' - 0"	7' - 0"	0' - 1 3/4"	F	HM	PTD	1	1	STL	PTD					0' - 0"	0' - 0"				●	●		●			90 MIN.	
ROOF																												
S2.7	STAIR 2	3' - 0"	7' - 0"	0' - 1 3/4"	F	HM	PTD	1	1	STL	PTD					0' - 0"	0' - 0"				●	●					90 MIN.	

DOOR GENERAL NOTES

1. SEE ARCHITECTURAL FLOOR PLANS FOR DOOR LOCATIONS AND DESIGNATIONS. SEE DOOR SCHEDULE FOR DOOR & FRAME SIZE, TYPE, GLAZING, HARDWARE GROUPS, ETC.
2. INTERIOR UNIT DOOR HEIGHTS SHALL BE 6'-8" TYPICAL, UNLESS OTHERWISE NOTED.
3. MAXIMUM EFFORT TO OPERATE DOORS SHALL NOT EXCEED LIMITS SET FORTH IN CBC SECTION, 1010.1.3. EXIT DOOR HARDWARE SHALL BE OPERABLE FROM INSIDE WITHOUT THE USE OF A KEY OR ANY SPECIAL KNOWLEDGE OR EFFORT IN ACCORDANCE WITH CBC SECTION 1010.1.9. ALL DOORS MUST BE OPERABLE BY WRIST OR ARM PRESSURE. SEE CBC SECTION 1010 FOR MORE INFORMATION.
4. SEE PLANS FOR DOOR HANDING.
5. ALL DOORS REQUIRED TO BE ACCESSIBLE SHALL BE EQUIPED WITH HARDWARE THAT COMPLIES WITH BARRIER-FREE REQUIREMENTS PER CBC 1010.1.9.1.
6. ALL FIRE-RESISTIVE DOOR ASSEMBLIES SHALL BE LABELED ACCORDINGLY.
7. SEE SCHEDULE FOR PROTECTION OF DOOR OPENINGS, SMOKE/DRAFT CONTROL AND FIRE PROTECTION RATING. SEE CBC SECTION 716 FOR ADDITIONAL INFORMATION.
8. AT ALL HAND-ACTIVATED LATCHING DOORS, PROVIDE LEVER-TYPE HARDWARE MOUNTED 36" ABOVE THE FINISH FLOOR
9. SEE CBC SECTION 1010.1.10 FOR PANIC HARDWARE REQUIREMENTS
10. ALL BATHROOM AND RESTROOM LOCKS TO HAVE EMERGENCY RELEASE MECHANISM.
11. PROVIDE MAGNETIC HOLD-OPENS WHERE INDICATED ON PLANS, IN DOOR SCHEDULE AND ON ELECTRICAL DRAWINGS.
12. ALL FIRE-RATED DOORS TO HAVE GASKETING PER HARDWARE SCHEDULE AND FIRE-RATING REQUIREMENTS.
13. SEE SCHEDULE AND ELECTRICAL DRAWINGS FOR DOORS AND/OR GATES SCHEDULED TO RECEIVE AUTOMATIC OPERATORS.
14. CLEARANCES FOR FIRE-RATED SWINGING - DOORS SHALL BE AS FOLLOWS: WITH A MINUS 1/16 TOLERANCE: 1/8 INCH ALONG THE TOP, 1/8 INCH ALONG THE HINGE AND LATCH JAMBS, 1/8 INCH ALONG THE MEETING EDGE OF DOORS IN PAIRS, AND 3/8 INCH AT THE BOTTOM EDGE OF A SINGLE SWING DOOR, AND 1/4 INCH AT THE BOTTOM OF A PAIR OF DOORS, PER UBC STANDARDS 7.206.6.
15. SEE SIGNAGE SCHEDULE AND DETAILS FOR SIGNAGE INFORMATION.
16. CARD READERS TO BE PROVIDED AS INDICATED ON SECURITY PLANS AND/OR WHERE INDICATED IN STOREFRONT AND DOOR SCHEDULES.
17. SEE GLAZING GENERAL NOTES FOR GLAZING INFORMATION

BASIC ACCESSIBILITY ELEVATION

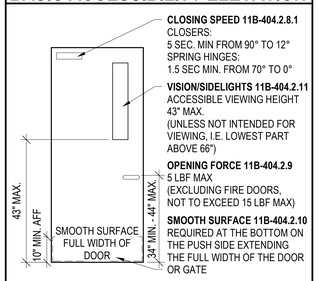

DOOR MATERIAL & FINISH KEY

MATERIALS

AL	ALUMINUM
AL/G	ALUMINUM / TEMPERED GLASS
FBG	FIBERGLASS
FBG/G	FIBERGLASS / TEMPERED GLASS
HC	HOLLOW CORE WOOD
HC/L	HOLLOW CORE WOOD / LOUVER
HC/G	HOLLOW CORE WOOD / TEMPERED GLASS
HM	HOLLOW METAL
HM/L	HOLLOW METAL / LOUVER
HM/G	HOLLOW METAL / TEMPERED GLASS
SC	SOLID CORE WOOD OR COMPOSITE
SC/L	SOLID CORE WOOD OR COMPOSITE / LOUVER
SC/G	SOLID CORE WOOD OR COMPOSITE / TEMPERED GLASS
STL	STEEL
WD	WOOD
VNL	VINYL

FINISHES

MFR	MANUFACTURER'S FINISH
FF	FACTORY FINISH, SEE FINISH SCHEDULE
PTD	PAINTED
FF/CLR	FACTORY FINISHED, CLEAR ANODIZED
FF/DB	FACTORY FINISHED, DARK BRONZE

PYATOK
1611 TELEGRAPH AVE.
SUITE 200
OAKLAND, CA 94612
T. 510.465.7010 | F. 510.465.8575
www.pyatok.com

THE UNITY COUNCIL
1900 FRUITVALE AVE
#2A
OAKLAND, CA 94601

2700 INTERNATIONAL

OAKLAND, CA 94601

STAMP:

ISSUE SCHEDULE

100 SD	5/11/22
50 DD	7/15/22
100 DD	9/16/22
50 CD	11/18/22
PERMIT SET	12/09/22

REVISION SCHEDULE

NO.	ISSUE	DATE

JOB NUMBER:	1937
DRAWN BY:	MA, DV, TN, MO, SP
CHECKED BY:	Checker
ISSUE DATE:	12/09/22
SCALE:	As indicated

TITLE:

DOOR SCHEDULE

SHEET:

A9.10

PRELIMINARY - Not for Construction -

© 2019 PYATOK ARCHITECTURE & URBAN DESIGN

12/8/2022 6:12:45 PM

DOOR SCHEDULE - UNITS

MARK	ROOM	DIMENSIONS			LEAF				FRAME			GLAZING			DETAILS			HARDWARE			FIRE RATING	COMMENTS
		WIDTH	HEIGHT	THICKNESS	TYPE	MATERIAL	FINISH	# OF LEAVES	TYPE	MATERIAL	FINISH	TYPE	OITC	STC	HEAD	SILL	JAMB	LATCH	CLOSER	HARDWARE GROUP		
Interior																						
U.01	UNIT ENTRY	3' - 0"	7' - 0"	0' - 1 3/4"	F	HM	PTD	1	1	STL	PTD							●	●		20 MIN.	
U.02	BEDROOM	3' - 0"	6' - 8"	0' - 1 3/8"	F	HC	PTD	1	1	WD	PTD							●				
U.04	BATHROOM	3' - 0"	6' - 8"	0' - 1 3/8"	F	HC	PTD	1	1	WD	PTD							●				
U.11	CLOSET	6' - 0"	6' - 8"	0' - 1 3/8"	B	HC	PTD	2	2	WD	PTD										--	
U.20	CLOSET	3' - 0"	6' - 8"	0' - 1 3/8"	F	HC	PTD	1	1	WD	PTD							●				
U.21	LINEN	2' - 6"	6' - 8"	0' - 1 3/8"	F	HC	PTD	1	1	WD	PTD							●				
U.22	LINEN	2' - 0"	6' - 8"	0' - 1 3/8"	F	HC	PTD	1	1	WD	PTD							●				
U.23	LINEN	1' - 6"	6' - 8"	0' - 1 3/8"	F	HC	PTD	1	1	WD	PTD							●				
U.30	CLOSET	7' - 0"	6' - 8"	0' - 1 3/8"	B	HC	PTD	2	2	WD	PTD								●		--	
U.31	CLOSET	6' - 0"	6' - 8"	0' - 1 3/8"	B	HC	PTD	2	2	WD	PTD											
U.32	CLOSET	5' - 0"	6' - 8"	0' - 1 3/8"	B	HC	PTD	2	2	WD	PTD											
U.33	CLOSET	4' - 0"	6' - 8"	0' - 1 3/8"	B	HC	PTD	2	2	WD	PTD											
U.34	CLOSET	3' - 0"	6' - 8"	0' - 1 3/8"	B	HC	PTD	2	2	WD	PTD										--	
U.35	CLOSET	4' - 0"	6' - 8"	0' - 1 3/8"	B	HC	PTD	2	2	WD	PTD										-	
U.40	CLOSET	3' - 0"	6' - 8"	0' - 1 3/8"	F	HC	PTD	1	1	WD	PTD							●			--	

DOOR SCHEDULE - COMMON AREAS STOREFRONT

MARK	LOCATION / ROOM	DIMENSIONS			LEAF				FRAME			GLAZING			SIDELIGHT			DETAILS			HARDWARE						FIRE RATING	COMMENTS
		WIDTH	HEIGHT	THICKNESS	TYPE	MATERIAL	FINISH	# OF LEAVES	TYPE	MATERIAL	FINISH	TYPE	OITC	STC	TYPE	HEIGHT	WIDTH	HEAD	SILL	JAMB	LATCH	CLOSER	CARD READER	EXIT DEVICE	HOLD OPEN	HARDWARE GROUP		
LEVEL 1																												
100	LOBBY	6' - 3"	9' - 0"	0' - 1 3/4"	FG	AL/G	FF/CLR	2	8	AL	FF/CLR	T									●	●	●	●			--	
103	PROPERTY MANAGEMENT	3' - 0"	8' - 0"	0' - 3 1/2"	FG	AL/G	FF/DB	1	8	AL	FF/DB	T									●	●	●				--	
111A	BREAK ROOM	3' - 0"	8' - 4"	0' - 3 1/2"	FG	AL/G	FF/DB	1	8	AL	FF/DB	T									●	●					--	
112A	COMMERCIAL	3' - 0"	8' - 3"	0' - 3 1/2"	FG	AL/G	FF/DB	1	8	AL	FF/DB	T									●	●					--	
122A	COMMERCIAL	3' - 0"	8' - 2"	0' - 3 1/2"	FG	AL/G	FF/DB	1	8	AL	FF/DB	T									●	●		●			--	
123A	COMMERCIAL	3' - 0"	8' - 9"	0' - 3 1/2"	FG	AL/G	FF/DB	1	8	AL	FF/DB	T									●	●		●			--	
124A	COMMERCIAL	3' - 0"	8' - 7"	0' - 3 1/2"	FG	AL/G	FF/DB	1	8	AL	FF/DB	T									●	●		●			--	
LEVEL 2																												
212A	COMMUNITY ROOM	3' - 6"	7' - 7 1/2"	0' - 3 1/2"	FG	AL/G	FF/DB	1	8	AL	FF/DB	T									●	●		●			--	
212B	COMMUNITY ROOM	3' - 6"	7' - 9 1/2"	0' - 3 1/2"	FG	AL/G	FF/DB	1	8	AL	FF/DB	T									●	●	●	●			--	

DOOR SCHEDULE - OVERHEAD DOORS

MARK	ROOM	DIMENSIONS			LEAF				FRAME			GLAZING			DETAILS			HARDWARE			FIRE RATING	COMMENTS
		WIDTH	HEIGHT	THICKNESS	TYPE	MATERIAL	FINISH	# OF LEAVES	TYPE	MATERIAL	FINISH	TYPE	OITC	STC	HEAD	SILL	JAMB	LATCH	CLOSER	HARDWARE GROUP		
Exterior																						
G.01	GARAGE	12' - 0"	8' - 6"	0' - 1 3/4"	OH1	MFR	MFR		9	MFR	MFR											
G.02	TRASH	6' - 0"	8' - 6"	0' - 1 3/4"	OH1	MFR	MFR		9	MFR	MFR											

FOLDING GLAZED WALL SCEDULE

MARK	ROOM	DIMENSIONS			LEAF				FRAME			GLAZING			DETAILS			HARDWARE			FIRE RATING	COMMENTS
		WIDTH	HEIGHT	THICKNESS	TYPE	MATERIAL	FINISH	# OF LEAVES	TYPE	MATERIAL	FINISH	TYPE	OITC	STC	HEAD	SILL	JAMB	LATCH	CLOSER	HARDWARE GROUP		
Interior																						
84	COMMUNITY ROOM	3' - 0"	7' - 0"	0' - 1 3/4"	F	HM	PTD	1	1	STL	PTD							●			-	

DOOR LEAF TYPES

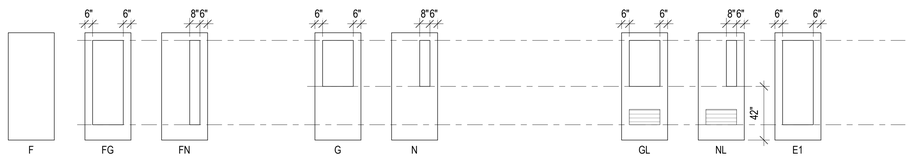

F - FLUSH
FG - FULL GLASS
FN - FULL NARROW LIGHT

G - HALF GLASS
N - NARROW LIGHT

GL - HALF GLASS AND LOUVERED

NL - NARROW LIGHT AND LOUVERED
E1 - 1 PANEL LEAF
E4 - 4 PANEL LEAF

OVERHEAD DOOR TYPES

OH1 - OVERHEAD ROLLING DOOR 1

FRAME TYPES

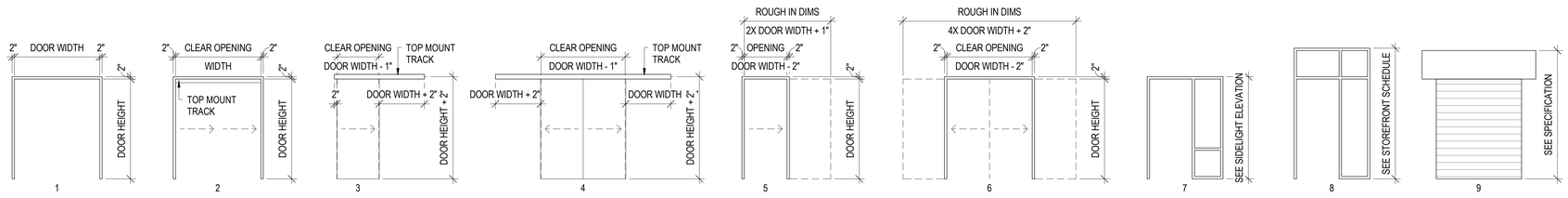

1 - SINGLE OR PAIR
2 - DOUBLE OR TRIPPLE BYPASS
3 - SINGLE BARN

4 - DOUBLE BARN
5 - SINGLE POCKET
6 - DOUBLE POCKET

7 - FRAME WITH SIDELIGHT
8 - STOREFRONT
9 - OVERHEAD COILING

12/8/2022 6:12:57 PM

PYATOK
1611 TELEGRAPH AVE.
SUITE 200
OAKLAND, CA 94612
T. 510.465.7010 | F. 510.465.8575
www.pyatok.com

THE UNITY COUNCIL
1900 FRUITVALE AVE
#2A
OAKLAND, CA 94601

2700 INTERNATIONAL
OAKLAND, CA 94601

STAMP:

ISSUE SCHEDULE

100 SD	5/11/22
50 DD	7/15/22
100 DD	9/16/22
50 CD	11/18/22
PERMIT SET	12/09/22

REVISION SCHEDULE

NO.	ISSUE	DATE

JOB NUMBER:	1937
DRAWN BY:	MA, DV, TN, MO, SP
CHECKED BY:	Checker
ISSUE DATE:	12/09/22
SCALE:	1/4" = 1'-0"

TITLE:
DOOR SCHEDULE

SHEET:
A9.11

PRELIMINARY - Not for Construction -

© 2019 PYATOK ARCHITECTURE & URBAN DESIGN

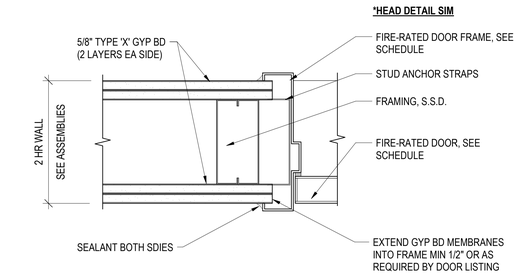

2 HR INTERIOR DOOR JAMB AT MTL STUD WALL **8**
3" = 1'-0"

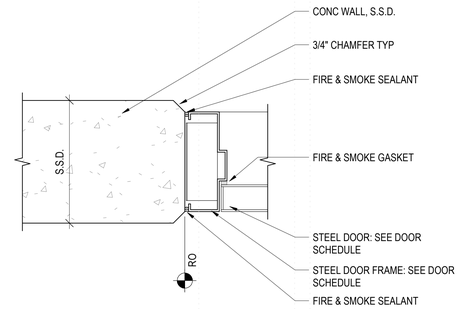

INTERIOR DOOR JAMB @ CONCRETE WALL **4**
3" = 1'-0"

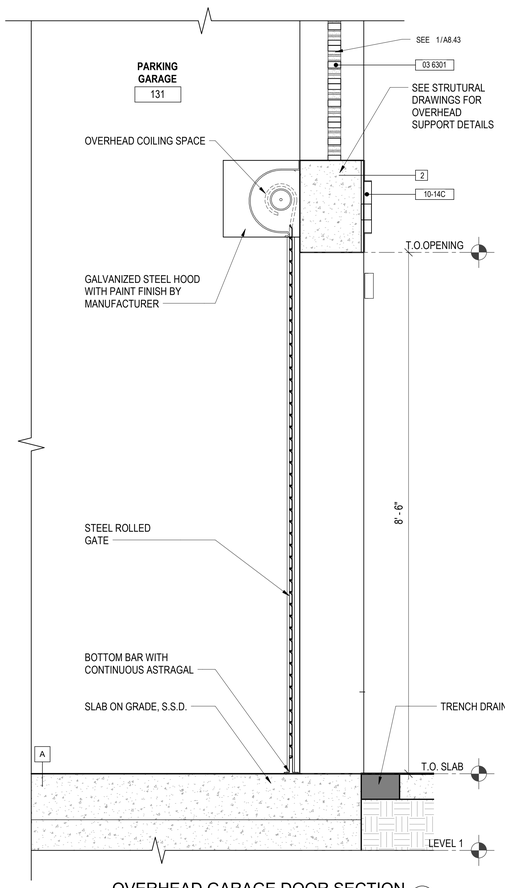

OVERHEAD GARAGE DOOR SECTION **10**
1" = 1'-0"

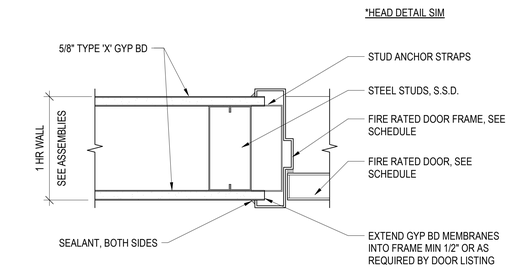

1 HR INTERIOR DOOR JAMB AT MTL STUD WALL **7**
3" = 1'-0"

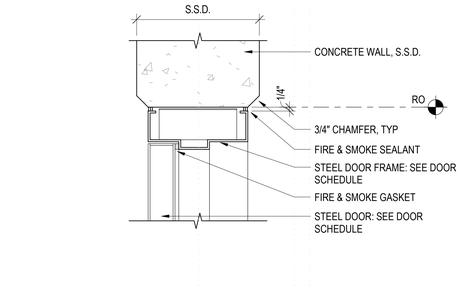

INTERIOR DOOR HEAD @ CONCRETE WALL **3**
3" = 1'-0"

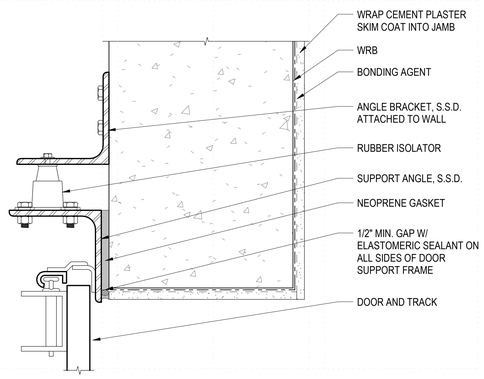

GARAGE DOOR JAMB WITH ISOLATOR **9**
3" = 1'-0"

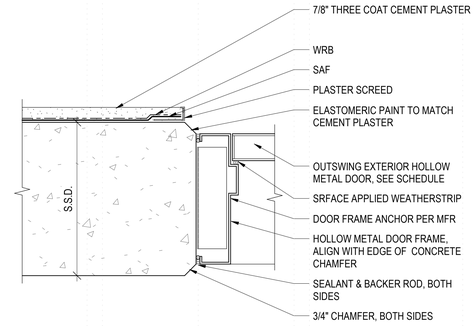

EXTERIOR DOOR JAMB @ CIP WALL W/ CEM PLAS **2**
3" = 1'-0"

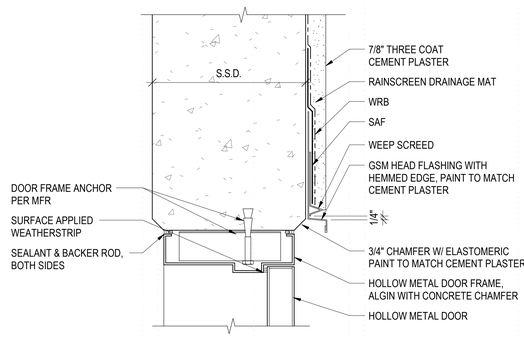

EXTERIOR DOOR HEAD @ CIP WALL W/ CEM PLAS **1**
3" = 1'-0"

12/8/2022 6:13:00 PM

PYATOK
1611 TELEGRAPH AVE.
SUITE 200
OAKLAND, CA 94612
T. 510.465.7010 | F. 510.465.8575
www.pyatok.com

THE UNITY COUNCIL
1900 FRUITVALE AVE
#2A
OAKLAND, CA 94601

2700 INTERNATIONAL
OAKLAND, CA 94601

STAMP:
LICENSED ARCHITECT
PETER WALLER
C-23551
4/30/2023
STATE OF CALIFORNIA

ISSUE SCHEDULE

100 SD	5/11/22
50 DD	7/15/22
100 DD	9/16/22
50 CD	11/18/22
PERMIT SET	12/09/22

REVISION SCHEDULE

NO.	ISSUE	DATE

JOB NUMBER:	1937
DRAWN BY:	Author
CHECKED BY:	Checker
ISSUE DATE:	12/09/22
SCALE:	As indicated

TITLE:
DOOR DETAILS

SHEET:
A9.12

PRELIMINARY - Not for Construction -

© 2019 PYATOK ARCHITECTURE & URBAN DESIGN

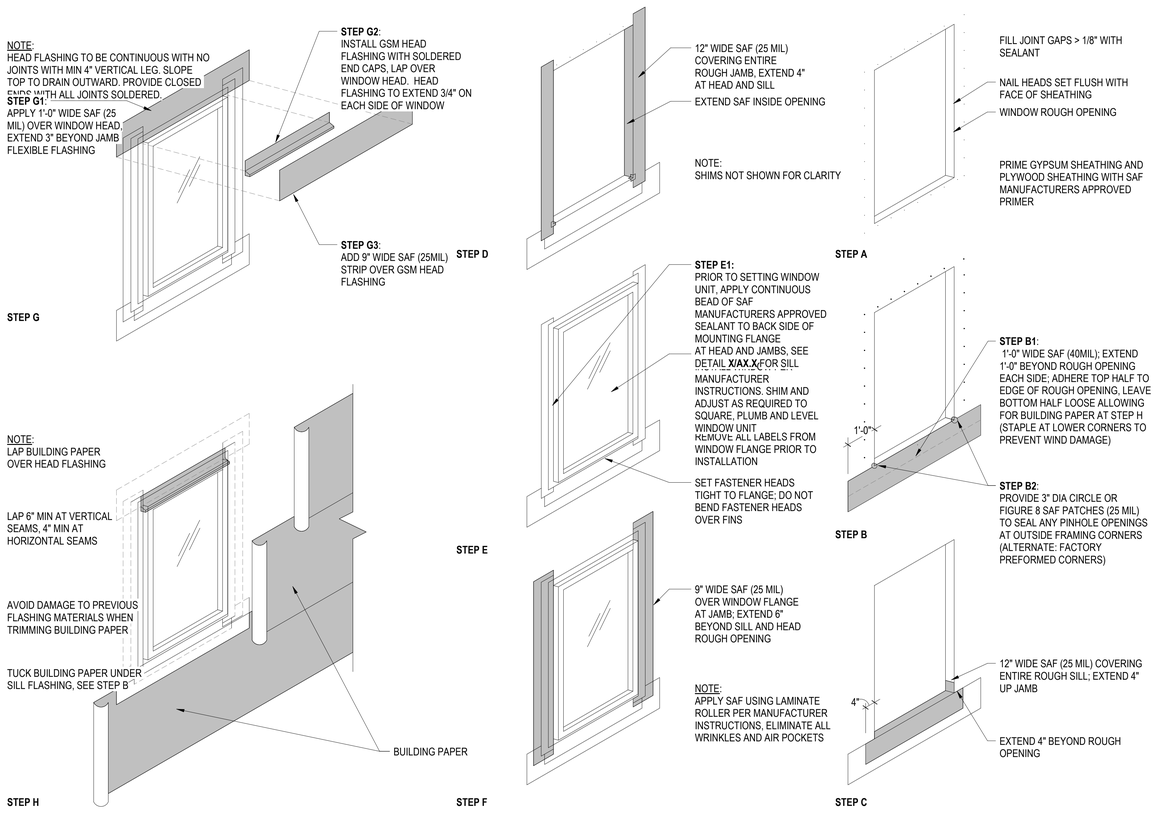

LIB 920 - STD - WINDOW FLASHING SEQUENCE DIAGRAM (1)
1/2" = 1'-0"

LOUVER SCHEDULE			
MARK	TYPE	HEIGHT	WIDTH
L1	6'-4" x 3'-6"	3' - 6"	6' - 4"
L2	3'-4" x 3'-6"	3' - 6"	3' - 4"
L3	3'-4" x 1'-4"	1' - 4"	3' - 4"
L4	37.75" x 35.5"	2' - 11 1/2"	3' - 1 3/4"

WINDOW SCHEDULE			
MARK	TYPE	HEIGHT	WIDTH
A1	A1 - MULTIPANE CASEMENT W/ FIXED BOTTOM AND LOUVER	7' - 0"	5' - 8"
A2	A2 - MULTIPANE CASEMENT W/ FIXED BOTTOM	6' - 0"	5' - 8"
A4	C3 - SINGLE CASEMENT	5' - 11 1/2"	2' - 1"
B1	B1 - SINGLE CASEMENT W/ FIXED BOTTOM	7' - 0"	4' - 0"
B2	B2 - SINGLE CASEMENT W/ FIXED BOTTOM	7' - 0"	3' - 3"
B3	B3 - SINGLE CASEMENT W/ FIXED BOTTOM	7' - 0"	3' - 0"
B4	B4 - SINGLE CASEMENT W/ FIXED BOTTOM	7' - 0"	2' - 10"
B5	B5 - SINGLE CASEMENT W/ FIXED BOTTOM	7' - 0"	2' - 6"
B7	B7 - SINGLE CASEMENT W/ FIXED BOTTOM	6' - 11 1/2"	3' - 6"
C1	C1 - SINGLE CASEMENT	4' - 11 1/2"	2' - 1"
C2	C2 - SINGLE CASEMENT	3' - 11 1/2"	2' - 1"
D1	D1 - SINGLE PANE AWNING WINDOW	2' - 0"	3' - 0"
F1	F1 - FIXED	7' - 0"	3' - 0"
F2	F2 - FIXED	2' - 0"	3' - 0"
F3	F3 - FIXED	6' - 0"	2' - 0"

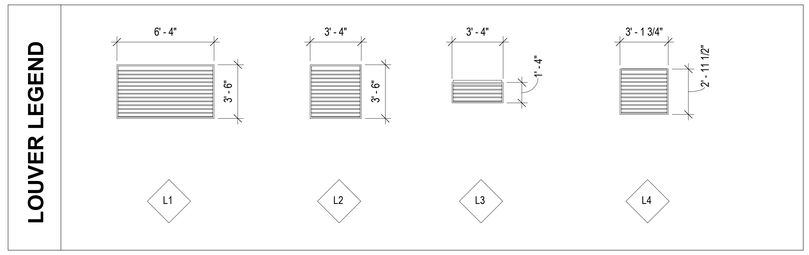

WINDOW GENERAL NOTES

1. SEE ARCHITECTURAL FLOOR PLANS, SHEET SERIES A2.X, FOR WINDOW LOCATIONS AND DESIGNATIONS.
2. ALL VINYL WINDOWS ARE BASED UPON VPI ENDURANCE SERIES, U-VALUE PER ENERGY COMPLIANCE REQUIREMENTS. SEE ENERGY MODEL FOR REQUIRED U-VALUE AND SHGC VALUES.
3. AIR INFILTRATION LABORATORY TEST IN ACCORDANCE WITH ASTM E 283 AT A TEST PRESSURE OF 1.57 PSF. FOR BOTH FIXED UNITS AND OPERABLE UNITS, THE AIR INFILTRATION RATE SHOULD NOT EXCEED 0.3 $FT^3/MIN/FT^2$.
4. WATER INFILTRATION LABORATORY TEST IN ACCORDANCE WITH ASTM E 331 AND ASTM E 547 AT A TEST PRESSURE OF 15% THE DESIGN PRESSURE AS WELL AS LOCAL WEATHER CONDITION OF 4.8 PSF. THE WINDOW SYSTEMS MUST HAVE NO LEAKAGE WHEN TESTED AT 4.8 PSF.
5. WINDOW SIZE, TYPE OF OPERATION (I.E. SLIDER, CASEMENT, ETC.) SHALL BE PER WINDOW SCHEDULE. ASYMMETRICAL WINDOW ASSEMBLIES, THE REVERSE CONDITION IS SHOWN IN LEGEND. SEE ELEVATIONS FOR OPERATION DIRECTION, ASYMMETRICAL WINDOW ASSEMBLY ORIENTATION, AND ADDITIONAL INFORMATION.
6. PROVIDE SAFETY GLAZING PER CBC 2406.4 AS REQUIRED
7. FOR PROTECTION OF WINDOW OPENINGS, SMOKE/DRAFT CONTROL AND FIRE PROTECTION RATING, SEE SCHEDULE AND SPECIFICATIONS.
8. CONTRACTOR IS RESPONSIBLE FOR FIELD VERIFYING ALL OPENING SIZES PRIOR TO FABRICATION.
9. DIMENSIONING IS BASED ON WINDOW SIZE DESIGNATION EQUAL TO ROUGH OPENING. IF CONDITIONS VARY, CONTRACTOR MUST NOTIFY ARCHITECT PRIOR TO FABRICATION.
10. WHERE "PARTIALLY OPERABLE" WINDOW OCCURS, LIMIT WINDOW OPERATION TO ALLOW MAXIMUM 4" OPENING. SEE BUILDING PLANS FOR LOCATIONS.
11. SEE GLAZING GENERAL NOTES FOR GLAZING INFORMATION

GLAZING GENERAL NOTES

1. GLAZING TO BE PER ENERGY COMPLIANCE REQUIREMENTS AND PER SPECIFICATIONS
2. ALL GLAZING IN HAZARDOUS LOCATIONS SHALL BE SAFETY GLAZING. SEE CBC SECTION 2406.4 FOR INFORMATION ON HAZARDOUS LOCATIONS
3. SEE DOOR, WINDOW, STOREFRONT, CURTAIN WALL SCHEDULES FOR FIRE RATING INFORMATION

EXTERIOR WINDOW LEGEND

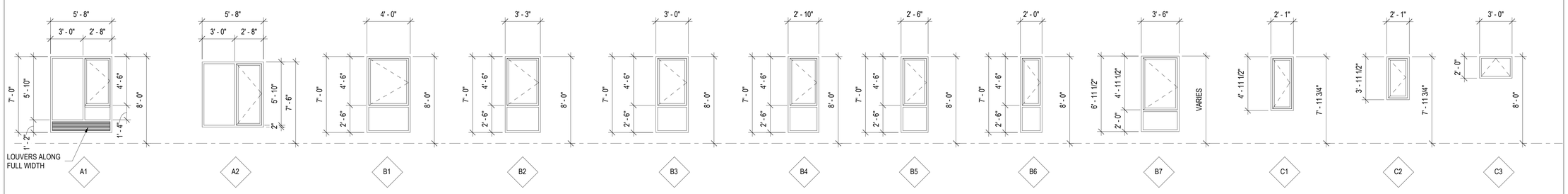

INTERIOR WINDOW LEGEND

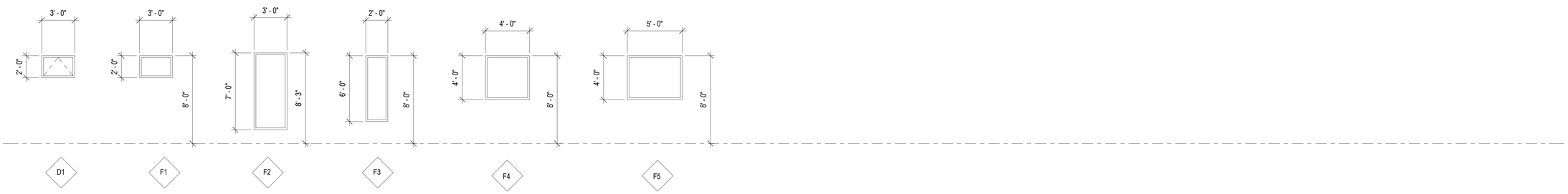

PYATOK
1611 TELEGRAPH AVE.
SUITE 200
OAKLAND, CA 94612
T. 510.465.7010 | F. 510.465.8575
www.pyatok.com

THE UNITY COUNCIL
1900 FRUITVALE AVE
#2A
OAKLAND, CA 94601

2700 INTERNATIONAL

OAKLAND, CA 94601

STAMP:

PETER WALLER
C-23554
4/30/2023

ISSUE SCHEDULE

100 SD	5/11/22
50 DD	7/15/22
100 DD	9/16/22
50 CD	11/18/22
PERMIT SET	12/09/22

REVISION SCHEDULE

NO.	ISSUE	DATE

JOB NUMBER:	1937
DRAWN BY:	MA, DV, TN, MO, SP
CHECKED BY:	Checker
ISSUE DATE:	12/09/22
SCALE:	As indicated

TITLE:
WINDOW & LOUVER SCHEDULES

SHEET:
A9.20

PRELIMINARY - Not for Construction -

© 2019 PYATOK ARCHITECTURE & URBAN DESIGN

12/8/2022 6:13:06 PM

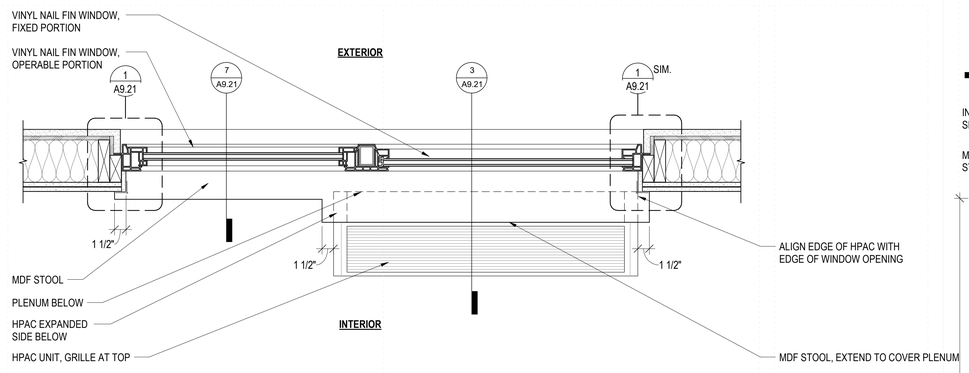

WINDOW SILL INTERIOR AT HPAC - PLAN (11)
1 1/2" = 1'-0"

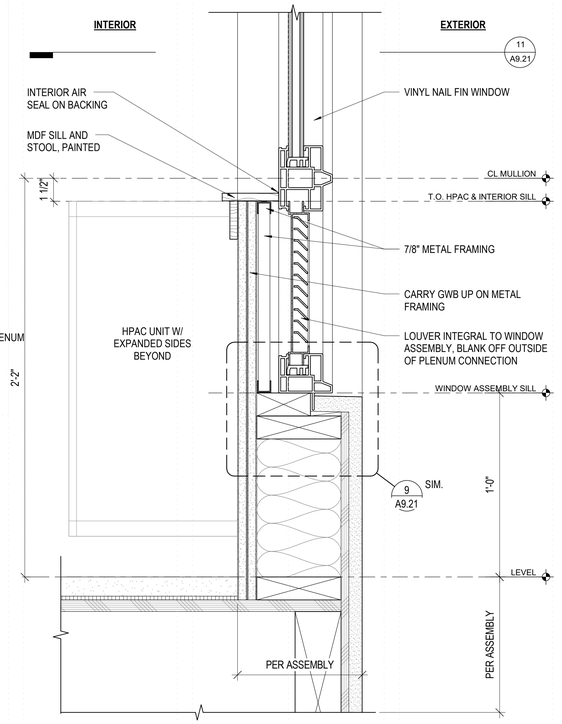

WINDOW SILL WITH LOUVER ADJACENT TO HPAC (7)
3" = 1'-0"

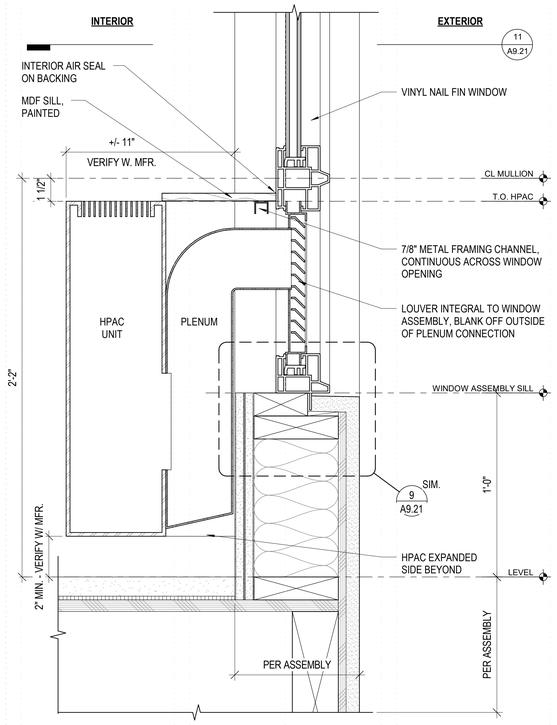

WINDOW SILL WITH LOUVER AT HPAC (3)
3" = 1'-0"

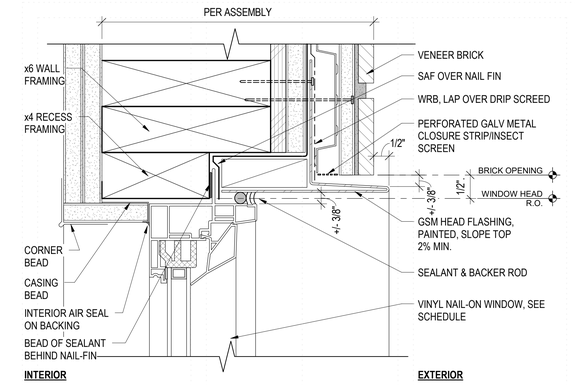

VINYL WINDOW HEAD AT VENEER BRICK (14)
6" = 1'-0"

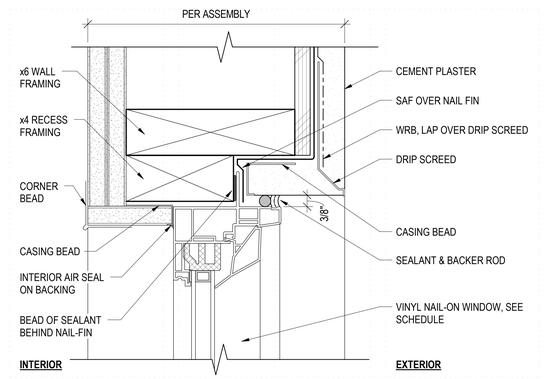

VINYL WINDOW HEAD AT CEMENT PLASTER (13)
6" = 1'-0"

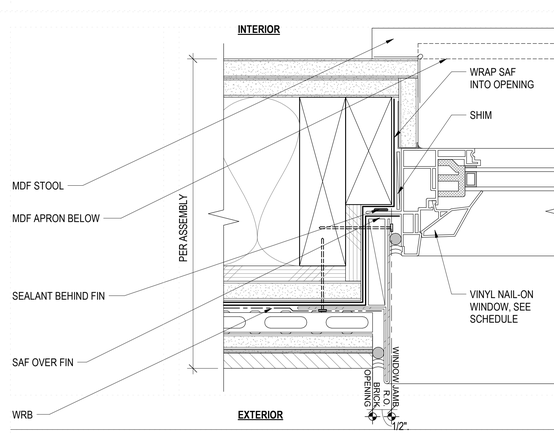

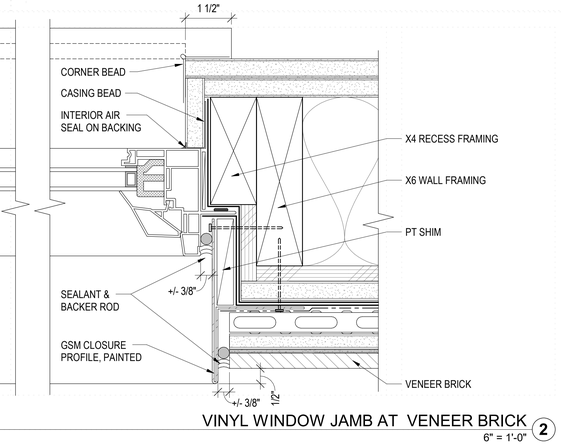

VINYL WINDOW JAMB AT VENEER BRICK (2)
6" = 1'-0"

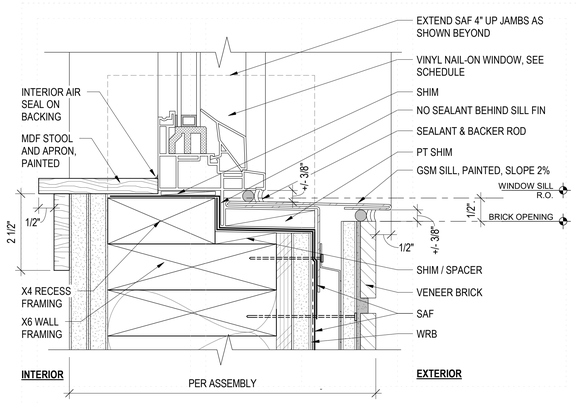

VINYL WINDOW SILL AT VENEER BRICK (10)
6" = 1'-0"

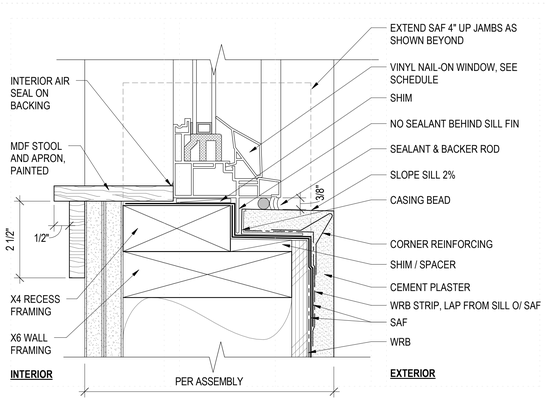

VINYL WINDOW SILL AT CEMENT PLASTER (9)
6" = 1'-0"

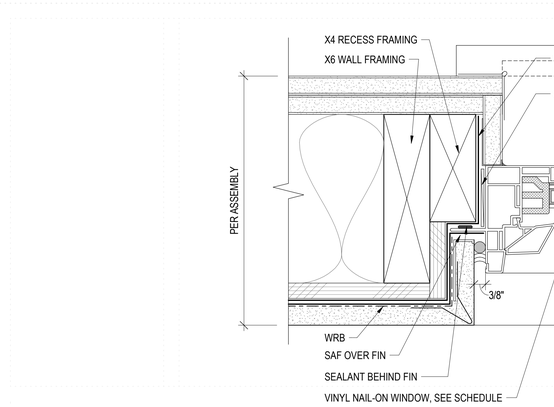

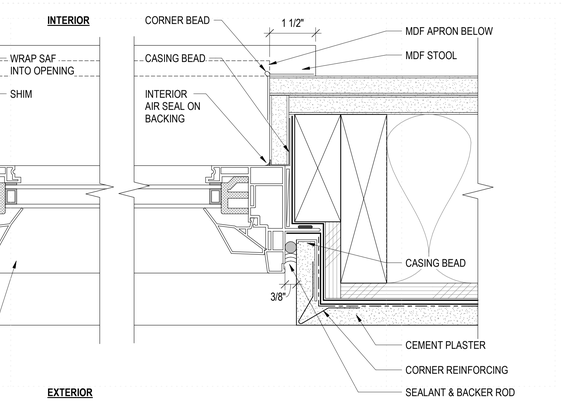

VINYL WINDOW JAMB AT CEMENT PLASTER (1)
6" = 1'-0"

PYATOK
1611 TELEGRAPH AVE.
SUITE 200
OAKLAND, CA 94612
T. 510.465.7010 | F. 510.465.8575
www.pyatok.com

THE UNITY COUNCIL
1900 FRUITVALE AVE
#2A
OAKLAND, CA 94601

2700 INTERNATIONAL

OAKLAND, CA 94601

STAMP:

LICENSED ARCHITECT — PETER WALLER — C-23554 — REN: 8/30/2023 — STATE OF CALIFORNIA

ISSUE SCHEDULE

100 SD	5/11/22
50 DD	7/15/22
100 DD	9/16/22
50 CD	11/18/22
PERMIT SET	12/09/22

REVISION SCHEDULE

NO.	ISSUE	DATE

JOB NUMBER:	1937
DRAWN BY:	MA, DV, TN, MO, SP
CHECKED BY:	Checker
ISSUE DATE:	12/09/22
SCALE:	As indicated

TITLE:

WINDOW DETAILS

SHEET:

A9.21

PRELIMINARY - Not for Construction -

© 2019 PYATOK ARCHITECTURE & URBAN DESIGN

12/8/2022 6:13:10 PM

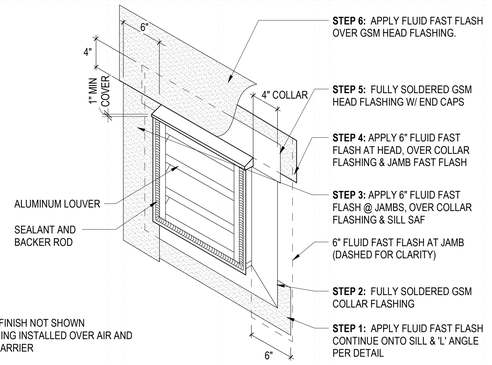

NOTES:
1. WALL FINISH NOT SHOWN
2. FLASHING INSTALLED OVER AIR AND WATER BARRIER

WALL LOUVER FLASHING SEQUENCE DIAGRAM 4
3" = 1'-0"

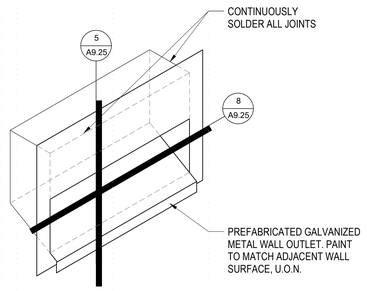

RECESSED VENT BOX - ISOMETRIC 6
1 1/2" = 1'-0"

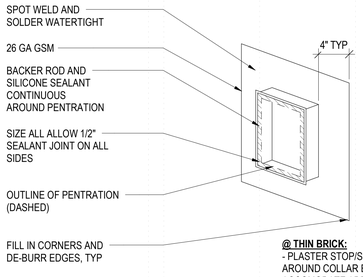

NOTES:
1. SHEET METAL J-MOLD RECEIVER
2. SOLDER TO FORM ONE CONTINUOUS WATERTIGHT PIECE
3. FIELD VERIFY DIMENSIONS AND CONDITIONS
4. SEE DETAIL 4/A9.40 FOR INSTALLATION

@ THIN BRICK:
- PLASTER STOP/STUCCO KEY DETAIL TO BE USED AROUND COLLAR EDGES. COLLAR DEPTH TO ACCOMODATE ADDITIONAL BUILD-UP AT DRAINAGE MAT

@ CEMENT LAP SIDING:
- FLAT HEMMED EDGE DETAIL TO BE USED AROUND COLLAR EDGES. COLLAR DEPTH TO ACCOMODATE ADDITIONAL DEPTH OF FURRING STRIPS UNDER CEMENT SIDING.

FLANGED PENETRATION FLASHING 3
1 1/2" = 1'-0"

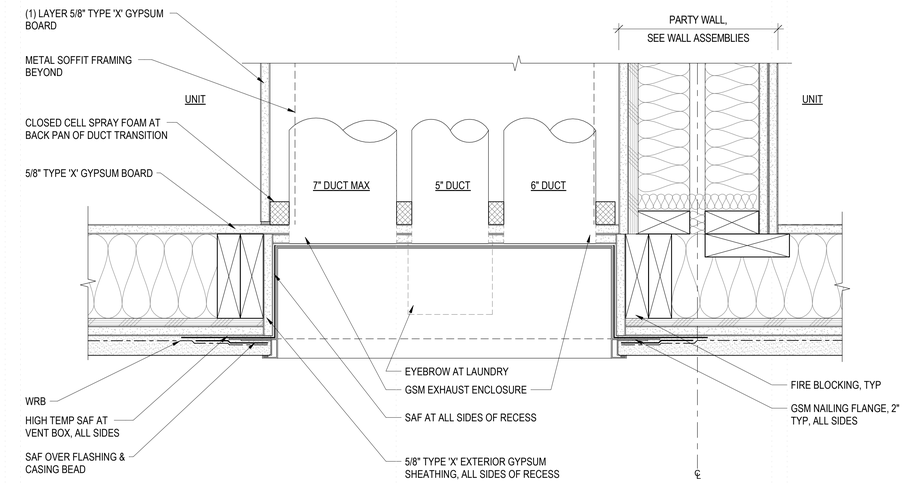

RECESSED EXHAUST VENT BOX AT STUCCO 8
3" = 1'-0"

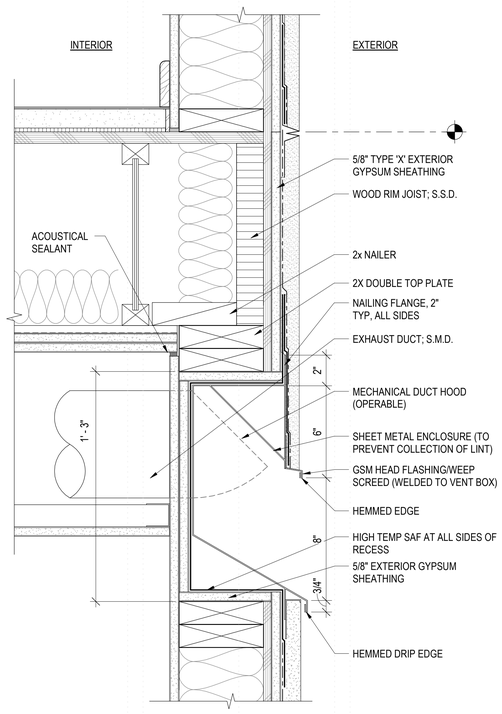

RECESSED VENT BOX AT CEM PLASTER 5
3" = 1'-0"

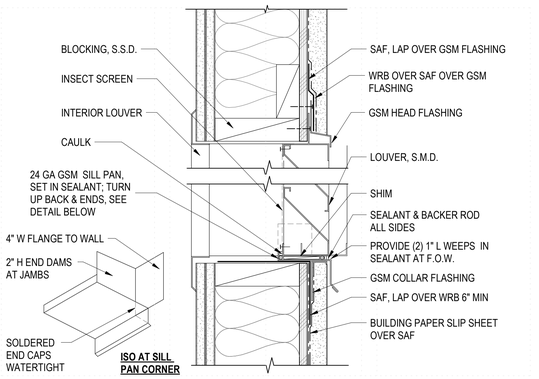

LOUVER DETAIL AT STUCCO 2
3" = 1'-0"

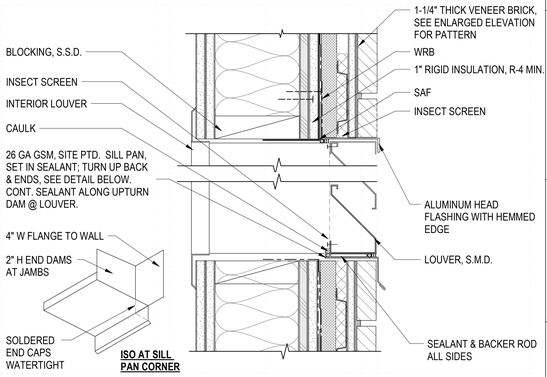

LOUVER DETAIL AT THIN BRICK 1
3" = 1'-0"

PYATOK
1611 TELEGRAPH AVE.
SUITE 200
OAKLAND, CA 94612
T. 510.465.7010 | F. 510.465.8575
www.pyatok.com

THE UNITY COUNCIL
1900 FRUITVALE AVE
#2A
OAKLAND, CA 94601

2700 INTERNATIONAL
OAKLAND, CA 94601

STAMP:
LICENSED ARCHITECT — PETER WALLER — C-33554 — 4/30/2023 — STATE OF CALIFORNIA

ISSUE SCHEDULE

100 SD	5/11/22
50 DD	7/15/22
100 DD	9/16/22
50 CD	11/18/22
PERMIT SET	12/09/22

REVISION SCHEDULE

NO.	ISSUE	DATE

JOB NUMBER:	1937
DRAWN BY:	MA, DV, TN, MO, SP
CHECKED BY:	Checker
ISSUE DATE:	12/09/22
SCALE:	As indicated

TITLE:
LOUVER DETAILS

SHEET:
A9.25

PRELIMINARY - Not for Construction -

© 2019 PYATOK ARCHITECTURE & URBAN DESIGN

12/8/2022 6:13:13 PM

STOREFRONT & CURTAIN WALL SCHEDULE									
Mark	Storefront Location	Frame Material	Frame Finish	Frame Type	Glass Type	Door	STC	Fire Rating	Count
EXTERIOR									
SF100A	LOBBY	AL	FF/DB	SSG CW	1" GLAZING	-			1
SF100B	LOBBY	AL	FF/DB	SSG CW	1" GLAZING	100A			1
SF103A	PROPERY MANAGEMENT	AL	FF/DB	CAP	1" GLAZING	-			1
SF103B	PROPERY MANAGEMENT	AL	FF/DB	CAP	1" GLAZING	-			1
SF106	PROPERY MANAGEMENT	AL	FF/DB	CAP	1" GLAZING	-			1
SF111	BREAK ROOM	AL	FF/DB	CAP	1" GLAZING	113A			1
SF112	SERVICE OFFICE	AL	FF/DB	CAP	1" GLAZING	115A			1
SF122	COMMERCIAL	AL	FF/DB	CAP	1" GLAZING	120			1
SF123	COMMERCIAL	AL	FF/DB	CAP	1" GLAZING	121			1
SF124A	COMMERCIAL	AL	FF/DB	CAP	1" GLAZING	-			1
SF124B	COMMERCIAL	AL	FF/DB	CAP	1" GLAZING	122			1
SF212B	COMMUNITY ROOM	AL	FF/DB	CAP	1" GLAZING	212B			1
INTERIOR									
SF111C	BREAK ROOM / COPY ROOM	AL	FF/DB	CAP	1" GLAZING	-			1

ALL STOREFRONT OPENINGS TO BE FIELD MEASURED.

STOREFRONT & CURTAIN WALL KEY	
AL	ALUMINUM
FF/DB	FACTORY FINISHED, DARK BRONZE

EXTERIOR STOREFRONT

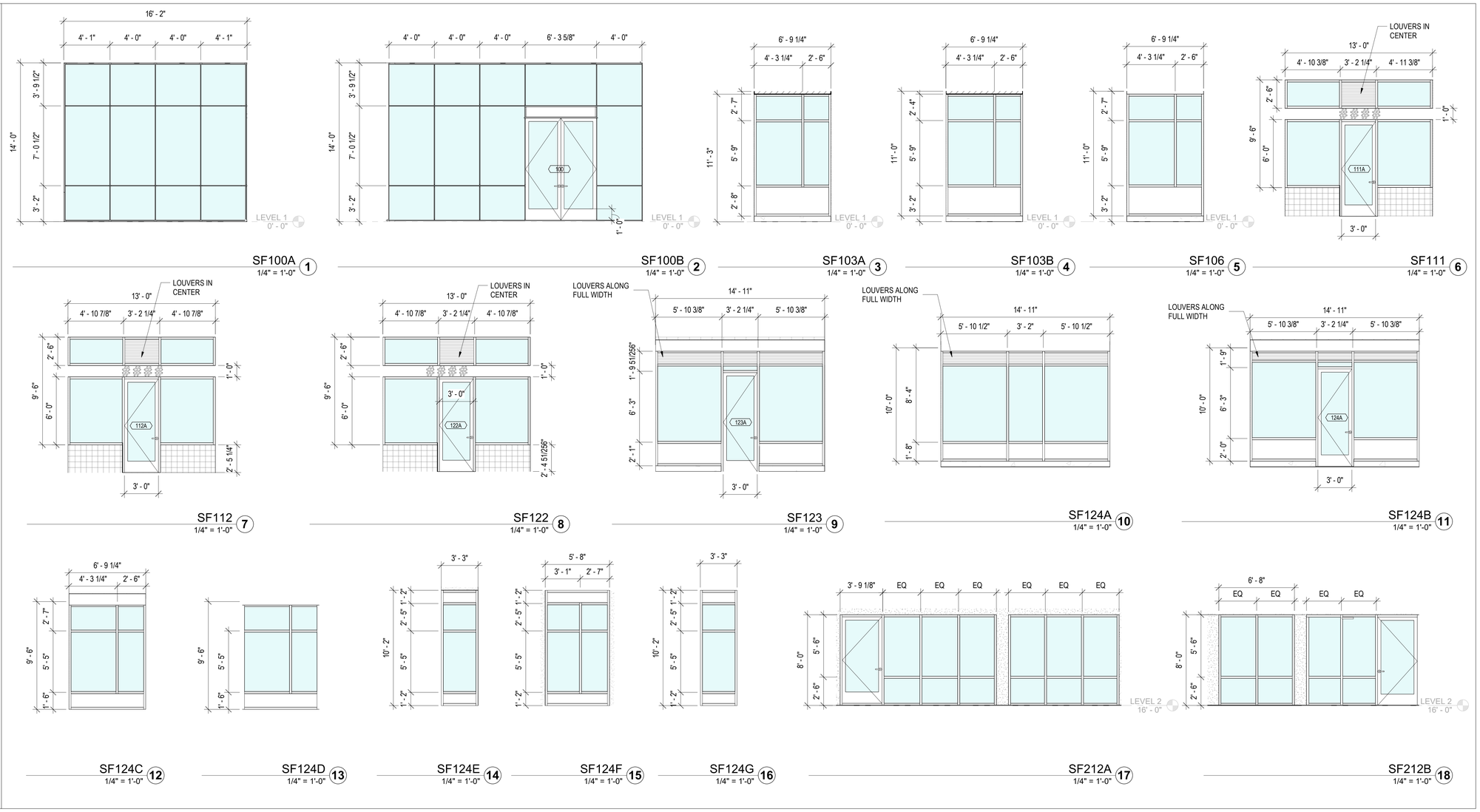

INTERIOR STOREFRONT

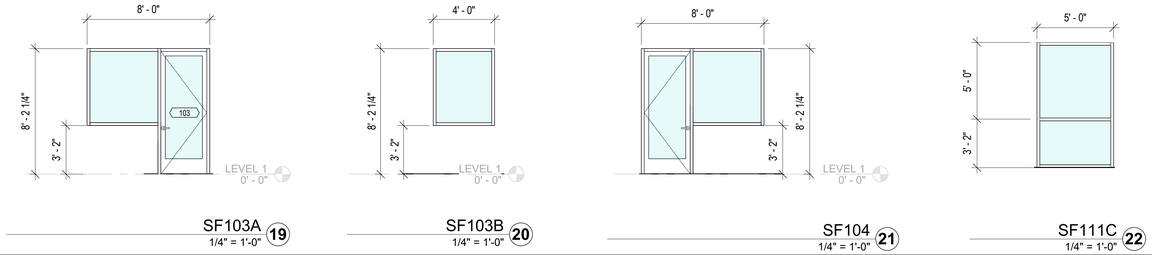

12/8/2022 6:13:22 PM

DOOR GENERAL NOTES

1. SEE ARCHITECTURAL FLOOR PLANS FOR DOOR LOCATIONS AND DESIGNATIONS. SEE DOOR SCHEDULE FOR DOOR & FRAME SIZE, TYPE, GLAZING, HARDWARE GROUPS, ETC.
2. INTERIOR UNIT DOOR HEIGHTS SHALL BE 6'-8" TYPICAL, UNLESS OTHERWISE NOTED.
3. MAXIMUM EFFORT TO OPERATE DOORS SHALL NOT EXCEED LIMITS SET FORTH IN CBC SECTION, 1010.1.3. EXIT DOOR HARDWARE SHALL BE OPERABLE FROM INSIDE WITHOUT THE USE OF A KEY OR ANY SPECIAL KNOWLEDGE OR EFFORT IN ACCORDANCE WITH CBC SECTION 1010.1.9. ALL DOORS MUST BE OPERABLE BY WRIST OR ARM PRESSURE. SEE CBC SECTION 1010 FOR MORE INFORMATION
4. SEE PLANS FOR DOOR HANDING.
5. ALL DOORS REQUIRED TO BE ACCESSIBLE SHALL BE EQUIPED WITH HARDWARE THAT COMPLIES WITH BARRIER-FREE REQUIREMENTS PER CBC 1010.1.9.1.
6. ALL FIRE-RESISTIVE DOOR ASSEMBLIES SHALL BE LABELED ACCORDINGLY.
7. SEE SCHEDULE FOR PROTECTION OF DOOR OPENINGS, SMOKE/DRAFT CONTROL AND FIRE PROTECTION RATING. SEE CBC SECTION 716 FOR ADDITIONAL INFORMATION.
8. AT ALL HAND-ACTIVATED LATCHING DOORS, PROVIDE LEVER-TYPE HARDWARE MOUNTED 36" ABOVE THE FINISH FLOOR
9. SEE CBC SECTION 1010.1.10 FOR PANIC HARDWARE REQUIREMENTS
10. ALL BATHROOM AND RESTROOM LOCKS TO HAVE EMERGENCY RELEASE MECHANISM.
11. PROVIDE MAGNETIC HOLD-OPENS WHERE INDICATED ON PLANS, IN DOOR SCHEDULE AND ON ELECTRICAL DRAWINGS.
12. ALL FIRE-RATED DOORS TO HAVE GASKETING PER HARDWARE SCHEDULE AND FIRE-RATING REQUIREMENTS.
13. SEE SCHEDULE AND ELECTRICAL DRAWINGS FOR DOORS AND/OR GATES SCHEDULED TO RECEIVE AUTOMATIC OPERATORS.
14. CLEARANCES FOR FIRE-RATED SWINGING - DOORS SHALL BE AS FOLLOWS: WITH A MINUS 1/16 TOLERANCE: 1/8 INCH ALONG THE TOP, 1/8 INCH ALONG THE HINGE AND LATCH JAMBS, 1/8 INCH ALONG THE MEETING EDGE OF DOORS IN PAIRS, AND 3/8 INCH AT THE BOTTOM EDGE OF A SINGLE SWING DOOR, AND 1/4 INCH AT THE BOTTOM OF A PAIR OF DOORS, PER UBC STANDARDS 7.206.6.
15. SEE SIGNAGE SCHEDULE AND DETAILS FOR SIGNAGE INFORMATION.
16. CARD READERS TO BE PROVIDED AS INDICATED ON SECURITY PLANS AND/OR WHERE INDICATED IN STOREFRONT AND DOOR SCHEDULES.
17. SEE GLAZING GENERAL NOTES FOR GLAZING INFORMATION

GLAZING GENERAL NOTES

1. GLAZING TO BE PER ENERGY COMPLIANCE REQUIREMENTS AND PER SPECIFICATIONS
2. ALL GLAZING IN HAZARDOUS LOCATIONS SHALL BE SAFETY GLAZING. SEE CBC SECTION 2406.4 FOR INFORMATION ON HAZARDOUS LOCATIONS
3. SEE DOOR, WINDOW, STOREFRONT, CURTAIN WALL SCHEDULES FOR FIRE RATING INFORMATION

STOREFRONT GENERAL NOTES

1. VERIFY ALL DIMENSIONS IN THE FIELD PRIOR TO FABRICATION OF ANY STOREFRONT
2. TOP OF CONCRETE CURB ELEVATION MAY VARIES. SEE SLAB PLANS FOR CURB ELEVATIONS.
3. COORDINATE WITH OTHER MANFUCTURED ITEMS FOR ATTACHMENT POINTS OF SIGNAGE, SUNSHADES, ETC.
4. SEE SIGNAGE SCHEDULE AND DETAILS FOR SIGNAGE INFORMATION.
5. CARD READERS TO BE PROVIDED AS INDICATED ON ELECTRICAL/SECURITY PLANS AND/OR WHERE INDICATED IN STOREFRONT AND DOOR SCHEDULES.
6. SEE STOREFRONT SCHEDULE FOR FIRE RATING INFORMATION.
7. DOORS IN STOREFRONT ASSEMBLIES TO COMPLY WITH ALL REQUIREMENTS NOTED IN THE DOOR GENERAL NOTES
8. DIMENSIONING IS BASED ON STOREFRONT WINDOW BEING EQUAL TO ROUGH OPENING.
9. SEE DETAILS FOR MORE INFORMATION.
10. SEE GLAZING GENERAL NOTES FOR GLAZING INFORMATION

PYATOK
1611 TELEGRAPH AVE.
SUITE 200
OAKLAND, CA 94612
T. 510.465.7010 | F. 510.465.8575
www.pyatok.com

THE UNITY COUNCIL
1900 FRUITVALE AVE
#2A
OAKLAND, CA 94601

2700 INTERNATIONAL

OAKLAND, CA 94601

STAMP:

LICENSED ARCHITECT
PETER WALLER
C-33554
4/30/2023
STATE OF CALIFORNIA

ISSUE SCHEDULE

100 SD	5/11/22
50 DD	7/15/22
100 DD	9/16/22
50 CD	11/18/22
PERMIT SET	12/09/22

REVISION SCHEDULE

NO.	ISSUE	DATE

JOB NUMBER:	1937
DRAWN BY:	MA, DV, TN, MO, SP
CHECKED BY:	Checker
ISSUE DATE:	12/09/22
SCALE:	As indicated

TITLE:

STOREFRONT SCHEDULE

SHEET:

A9.30

PRELIMINARY - Not for Construction -

© 2019 PYATOK ARCHITECTURE & URBAN DESIGN

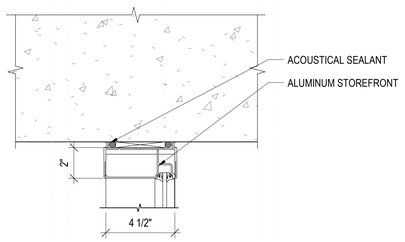

INTERIOR STOREFRONT SILL HEAD 15
3" = 1'-0"

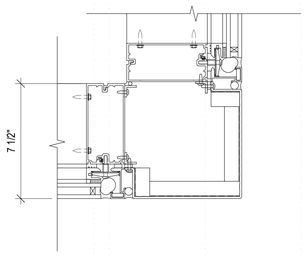

CORNER MULLION AT LOBBY 8
3" = 1'-0"

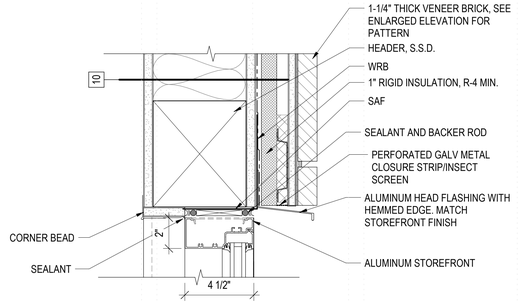

STOREFRONT AT BRICK (HEAD) 4
3" = 1'-0"

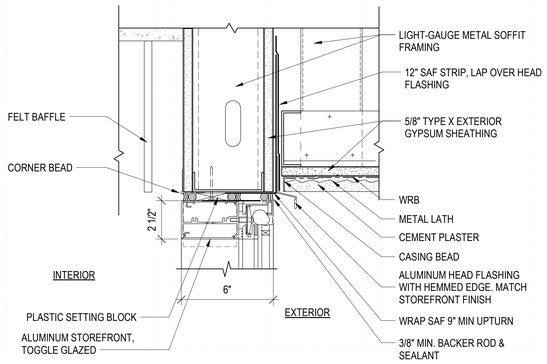

STOREFRONT HEAD AT SOFFIT LOBBY 7
3" = 1'-0"

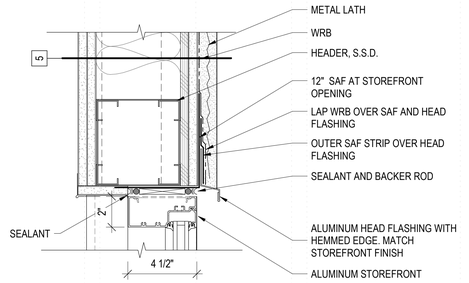

STOREFRONT AT CEMENT PLASTER (HEAD) 3
3" = 1'-0"

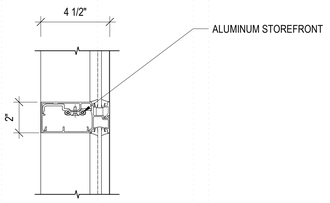

INTERIOR STOREFRONT HORIZONTAL MULLION 14
3" = 1'-0"

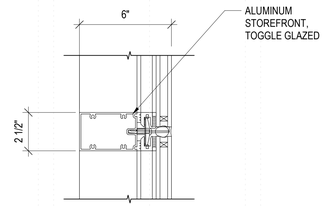

STOREFRONT AT LOBBY HORIZONTAL MULLION 6
3" = 1'-0"

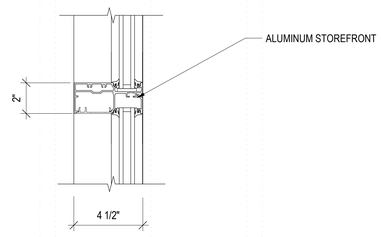

STOREFRONT HORIZONTAL MULLION 2
3" = 1'-0"

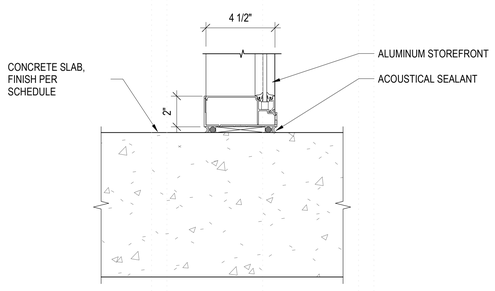

INTERIOR STOREFRONT SILL 13
3" = 1'-0"

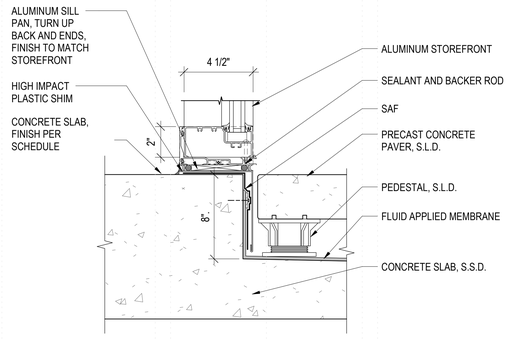

STOREFRONT SILL AT PAVERS 9
3" = 1'-0"

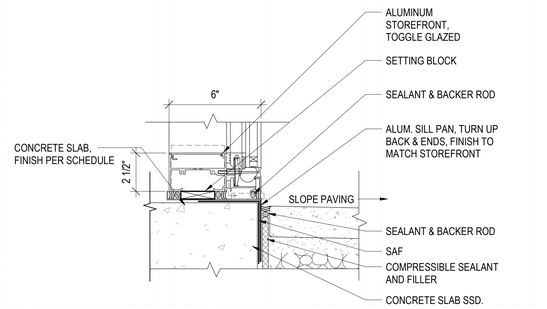

STOREFRONT SILL AT GRADE AT LOBBY 5
3" = 1'-0"

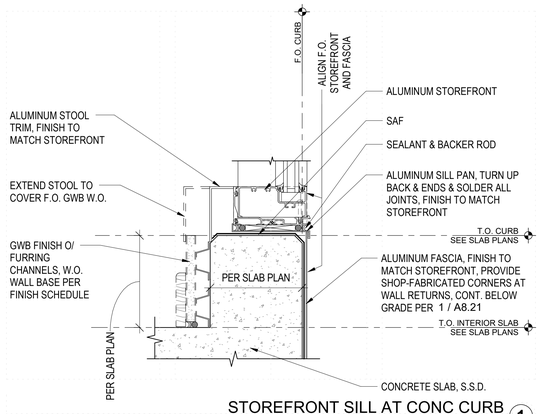

STOREFRONT SILL AT CONC CURB 1
3" = 1'-0"

12/8/2022 6:13:25 PM

PYATOK
1611 TELEGRAPH AVE.
SUITE 200
OAKLAND, CA 94612
T. 510.465.7010 | F. 510.465.8575
www.pyatok.com

THE UNITY COUNCIL
1900 FRUITVALE AVE
#2A
OAKLAND, CA 94601

2700 INTERNATIONAL
OAKLAND, CA 94601

STAMP:

LICENSED ARCHITECT
PETER WALLER
C-33554
4/30/2023
STATE OF CALIFORNIA

ISSUE SCHEDULE

100 SD	5/11/22
50 DD	7/15/22
100 DD	9/16/22
50 CD	11/18/22
PERMIT SET	12/09/22

REVISION SCHEDULE

NO.	ISSUE	DATE

JOB NUMBER:	1937
DRAWN BY:	MA, DV, TN, MO, SP
CHECKED BY:	Checker
ISSUE DATE:	12/09/22
SCALE:	3" = 1'-0"

TITLE:
STOREFRONT DETAILS

SHEET:
A9.31

PRELIMINARY - Not for Construction -

© 2019 PYATOK ARCHITECTURE & URBAN DESIGN

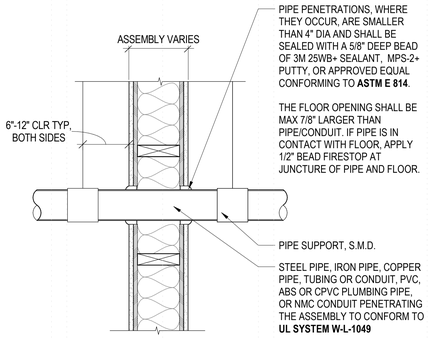

PENETRATION IN RATED INTERIOR WALL 3
1 1/2" = 1'-0"

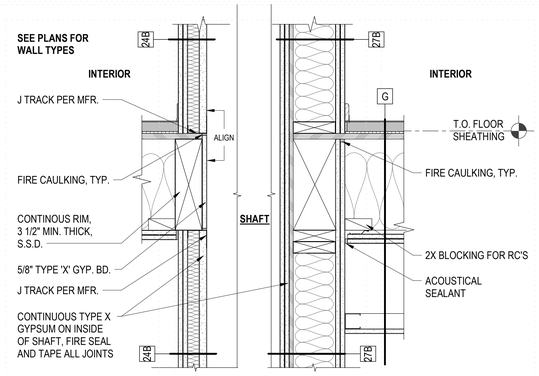

2HR RATED SHAFT AT FLOOR - TYP SECT 2
1 1/2" = 1'-0"

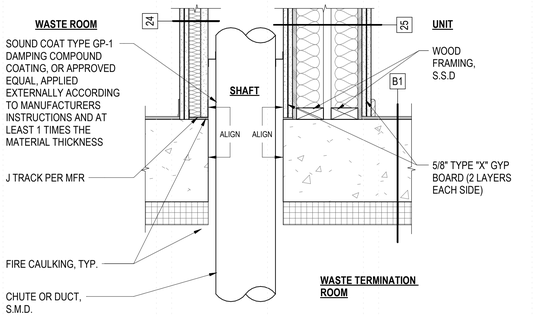

2-HR RATED SHAFT TERMINATION 1
1 1/2" = 1'-0"

12/8/2022 6:13:28 PM

PYATOK
1611 TELEGRAPH AVE.
SUITE 200
OAKLAND, CA 94612
T. 510.465.7010 | F. 510.465.8575
www.pyatok.com

THE UNITY COUNCIL
1900 FRUITVALE AVE
#2A
OAKLAND, CA 94601

2700 INTERNATIONAL
OAKLAND, CA 94601

STAMP:
LICENSED ARCHITECT
PETER WALLER
C-23551
4/30/2023
STATE OF CALIFORNIA

ISSUE SCHEDULE

100 SD	5/11/22
50 DD	7/15/22
100 DD	9/16/22
50 CD	11/18/22
PERMIT SET	12/09/22

REVISION SCHEDULE

NO.	ISSUE	DATE

JOB NUMBER:	1937
DRAWN BY:	Author
CHECKED BY:	Checker
ISSUE DATE:	12/09/22
SCALE:	1 1/2" = 1'-0"

TITLE:
FIRESTOPPING AND PENETRATION

SHEET:
A9.60

PRELIMINARY - Not for Construction -

© 2019 PYATOK ARCHITECTURE & URBAN DESIGN

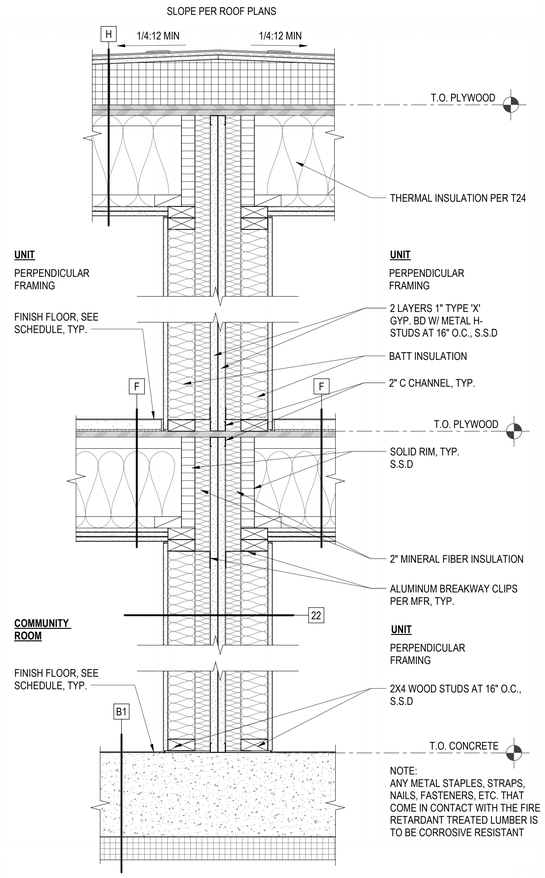

3 HR FIRE WALL - INTERIOR (2)
1 1/2" = 1'-0"

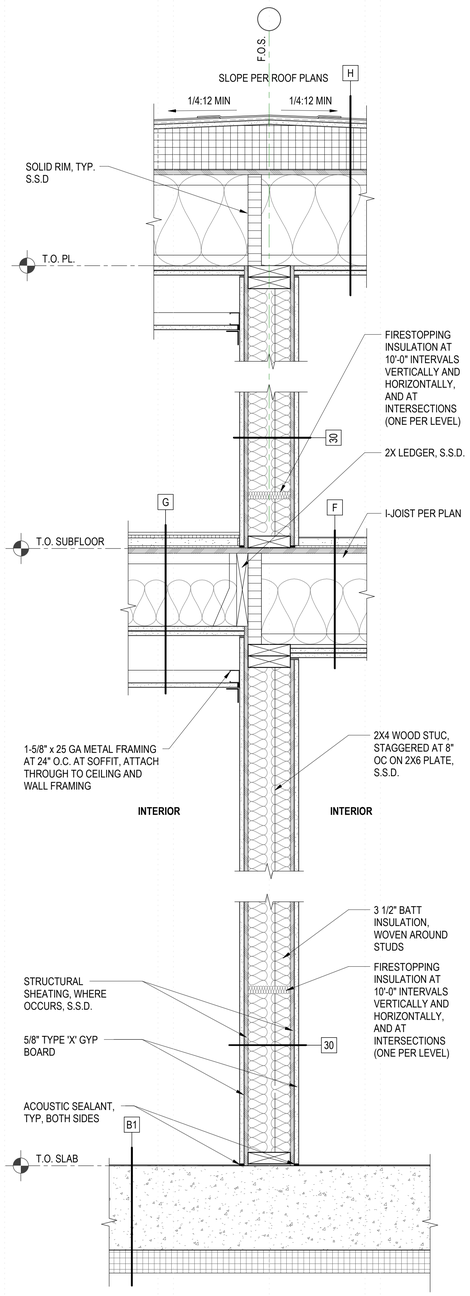

1 HR FIRE PARTITION CORRIDOR WALL (1)
1 1/2" = 1'-0"

CORRIDOR WALL NOTES:

1. ELECTRICAL BOXES SHALL BE OFFSET MIN HORIZONTAL DISTANCE OF 24 INCHES.
2. PROVIDE FIRESTOPPING AT ALL PLUMBING PENETRATIONS PER FIRE STOP MANUFACTURER INSTRUCTIONS. PROVIDE FIRE BLOCKING AT 10'-0" INTERVALS HORIZONTALLY AND VERTICALLY AT THE CEILING AND FLOOR LEVELS PER CBC 2019 SECTION 718.2.
3. PROVIDE ACOUSTICAL SEALANT AT PERIMETER OF ALL WALLS AND OPENINGS.
4. AT MEMBRANE PENETRATIONS INTO WALL CAVITY NOT LARGER THAN A 4" NOMINAL PIPE OR 16 SQ. INCHES IN OVERALL CROSS-SECTIONAL AREA, PROVIDE 3M 'CP 25' FIRE CAULK, OR EQUAL, AT PERIMETER OF PENETRATION TO FULL DEPTH OF GYPSUM WALL BOARD.
5. WHERE HVAC DUCTS LARGER THAN 16" IN CROSS SECTIONAL AREA, DUCT IS TO BE 26 GAUGE MIN. W/ 3M 'CP 25' FIRE CAULK, OR EQUAL, AT PERIMETER OF PENETRATION TO FULL DEPTH OF GYPSUM WALL BOARD.
6. ALL PENETRATIONS OF FIRE-RATED WALLS MUST COMPLY WITH CBC 2019 SECTION 712. IF THE PENETRATIONS CANNOT COMPLY WITH THE EXCEPTIONS, CONTRACTOR TO SUBMIT A LISTED PENETRATION DETAIL FOR REVIEW.

NOTE: FRAMING SHOWN DIAGRAMMATICALLY. SEE STRUCTURAL DRAWINGS FOR ACTUAL FRAMING DETAILS.

PYATOK
1611 TELEGRAPH AVE.
SUITE 200
OAKLAND, CA 94612
T. 510.465.7010 | F. 510.465.8575
www.pyatok.com

THE UNITY COUNCIL
1900 FRUITVALE AVE
#2A
OAKLAND, CA 94601

2700 INTERNATIONAL

OAKLAND, CA 94601

STAMP:

LICENSED ARCHITECT — PETER WALLER — C-23591 — 4/30/2023 — STATE OF CALIFORNIA

ISSUE SCHEDULE

100 SD	5/11/22
50 DD	7/15/22
100 DD	9/16/22
50 CD	11/18/22
PERMIT SET	12/09/22

REVISION SCHEDULE

NO.	ISSUE	DATE

JOB NUMBER:	1937
DRAWN BY:	Author
CHECKED BY:	Checker
ISSUE DATE:	12/09/22
SCALE:	1 1/2" = 1'-0"

TITLE:

CORRIDOR AND OCCUPANCY SEPERATION DETAILS

SHEET:

A9.61

PRELIMINARY - Not for Construction -

© 2019 PYATOK ARCHITECTURE & URBAN DESIGN

12/8/2022 6:13:31 PM

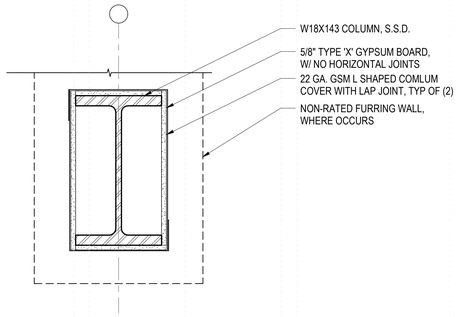

1 HR FR	GA FILE NO. CM 1000

1HR COLUMN PROTECTION @ W18X143 (7)
1 1/2" = 1'-0"

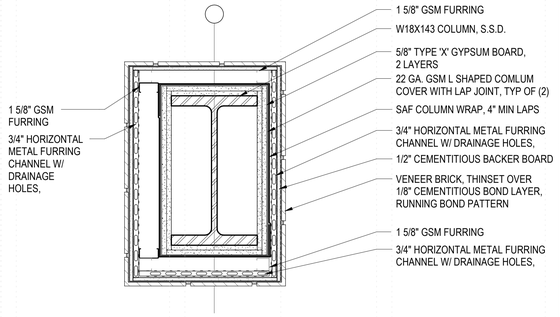

2 HR FR	GA FILE NO. CM 2015

2HR COLUMN PROTECTION @ W18X143 (3)
1 1/2" = 1'-0"

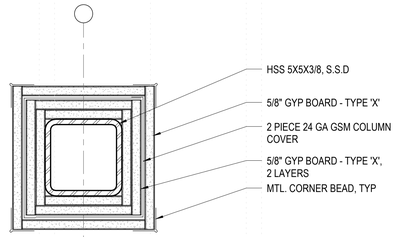

2 HR FR	GA FILE NO. CM 2454

2HR COLMUN PROTECTION @ HSS 5X5X3/8 (10)
3" = 1'-0"

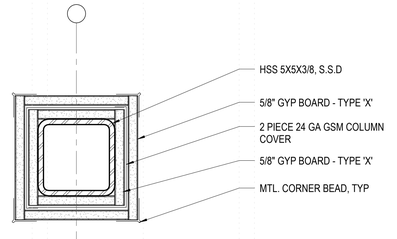

1 HR FR	GA FILE NO. CM 1451

1HR COLMUN PROTECTION @ HSS 5X5X3/8 (6)
3" = 1'-0"

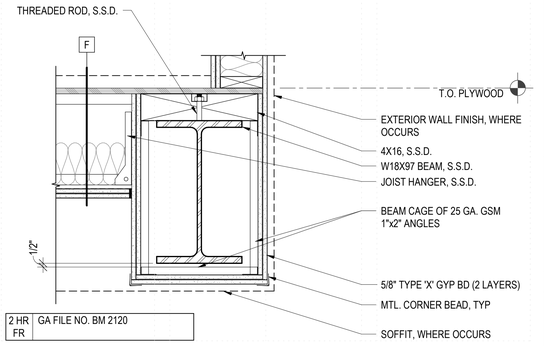

2 HR FR	GA FILE NO. BM 2120

2HR BEAM PROTECTION @ W18X97 (2)
1 1/2" = 1'-0"

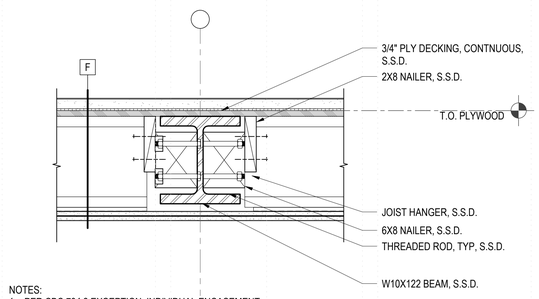

NOTES:
1. PER CBC 704.3 EXCEPTION, INDIVIDUAL ENCASEMENT PROTECTION IS REQUIRED ONLY AT EXPOSED SIDES OF THE BEAM.
2. PER CBC 722.6, 1HR RATING IS FROM CALCULATED MEMBRANE PROTECTION ON FIRE EXPOSED SIDE (BELOW). UPPER MEMBRANE TO CONSIST OF SUBFLOOR AND FINISHED FLOOR CONFORMING TO CBC TABLE 722.6.(1)

1HR BEAM PROTECTION @ W10X122 (9)
1 1/2" = 1'-0"

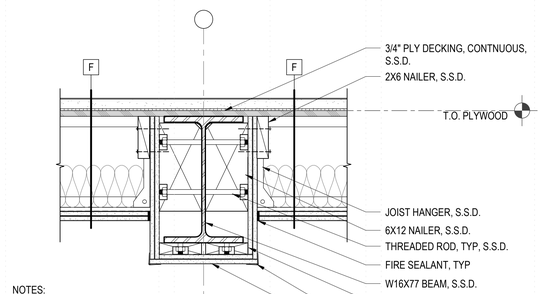

NOTES:
1. PER CBC 704.3 EXCEPTION, INDIVIDUAL ENCASEMENT PROTECTION IS REQUIRED ONLY AT EXPOSED SIDES OF THE BEAM.
2. PER CBC 722.6, 1HR RATING IS FROM CALCULATED MEMBRANE PROTECTION ON FIRE EXPOSED SIDE (BELOW). UPPER MEMBRANE TO CONSIST OF SUBFLOOR AND FINISHED FLOOR CONFORMING TO CBC TABLE 722.6.(1)

1HR BEAM PROTECTION @ W16X77 (5)
1 1/2" = 1'-0"

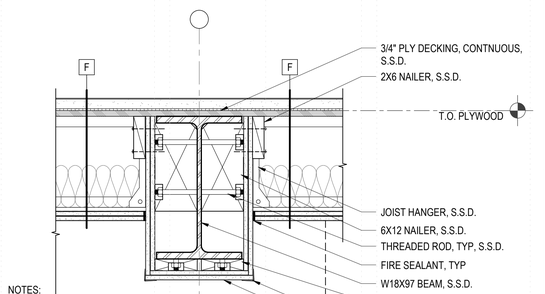

NOTES:
1. PER CBC 704.3 EXCEPTION, INDIVIDUAL ENCASEMENT PROTECTION IS REQUIRED ONLY AT EXPOSED SIDES OF THE BEAM.
2. PER CBC 722.6, 1HR RATING IS FROM CALCULATED MEMBRANE PROTECTION ON FIRE EXPOSED SIDE (BELOW). UPPER MEMBRANE TO CONSIST OF SUBFLOOR AND FINISHED FLOOR CONFORMING TO CBC TABLE 722.6.(1)

1HR BEAM PROTECTION @ W18X97 (1)
1 1/2" = 1'-0"

12/8/2022 6:13:34 PM

PYATOK
1611 TELEGRAPH AVE.
SUITE 200
OAKLAND, CA 94612
T. 510.465.7010 | F. 510.465.8575
www.pyatok.com

THE UNITY COUNCIL
1900 FRUITVALE AVE
#2A
OAKLAND, CA 94601

2700 INTERNATIONAL
OAKLAND, CA 94601

STAMP:
LICENSED ARCHITECT
PETER WALLER
C-33554
4/30/2023
STATE OF CALIFORNIA

ISSUE SCHEDULE

100 SD	5/11/22
50 DD	7/15/22
100 DD	9/16/22
50 CD	11/18/22
PERMIT SET	12/09/22

REVISION SCHEDULE

NO.	ISSUE	DATE

JOB NUMBER:	1937
DRAWN BY:	MA, DV, TN, MO, SP
CHECKED BY:	Checker
ISSUE DATE:	12/09/22
SCALE:	As indicated

TITLE:
PRIMARY STRUCTURE FIRE PROTECTION

SHEET:
A9.70

PRELIMINARY - Not for Construction -

© 2019 PYATOK ARCHITECTURE & URBAN DESIGN

UNIT FINISH SCHEDULE									
ROOM NAME	FLOOR		BASE FINISH	WAINSCOT FINISH	WALL		CEILING		COMMENTS
	MATERIAL	FINISH			MATERIAL	FINISH	MATERIAL	FINISH	
LEVEL 2									
ENTRY, LIVING ROOM	CON	LVP	WB	N/A	GWB	PES	GWB	PES	
KITCHEN	CON	LVP	WB	N/A	GWB	PES	GWB	PES	
BEDROOM	CON	LVP	WB	N/A	GWB	PES	GWB	PES	
BATHROOM	CON	LVP	RB-3	N/A	GWB	PSG	GWB	PSG	
LEVEL 3-6									
ENTRY, LIVING ROOM	CBU	LVP	WB	N/A	GWB	PES	GWB	PES	
KITCHEN	CBU	LVP	WB	N/A	GWB	PES	GWB	PES	
BEDROOM	CBU	LVP	WB	N/A	GWB	PES	GWB	PES	
BATHROOM	CBU	LVP	RB-3	N/A	GWB	PSG	GWB	PSG	

COMMON AREA FINISH SCHEDULE										
ROOM #	ROOM NAME	FLOOR		BASE FINISH	WAINSCOOT FINISH	WALL		CEILING		COMMENTS
		MATERIAL	FINISH			MATERIAL	FINISH	MATERIAL	FINISH	
LEVEL 1										
100	LOBBY	CON-1	CON-2	WB	-	CON/GWB	PES	CON	PES	
101	MAIL	CON-1	CT	WB	-	GWB	PES	GWB	PES	
102	FIRE COMMAND CENTER	CON-1	CON-4	-	-	CON/GWB	PSG	CON	PSG	
103	PROP MGMT	CON-1	LVP	RB-2	-	CON/GWB	PES	CON	PES	
104	PROP MGMT	CON-1	LVP	RB-2	-	CON/GWB	PES	CON	PES	
105	VESTIBULE	CON-1	LVP	RB-2	-	GWB	PES	CON	PES	
106	PROP MGMT	CON-1	LVP	RB-2	-	GWB	PES	CON	PES	
107	PACKAGE	CON-1	CON-3	RB-1	-	GWB	PES	CON	PES	
108	ELEV MACHINE ROOM	CON-1	CON-4	-	-	GWB	PSG	CON	PSG	
109	SERVER ROOM	CON-1	CON-2	RB-2	-	GWB	PES	CON	PES	
110	COPY	CON-1	CON-2	RB-2	-	GWB	PES	CON	PES	
111	BREAK RM	CON-1	CON-2	RB-2	-	GWB	PES	CON	PES	
112	SERVICE OFFICE	CON-1	LVP	RB-2	-	GWB	PES	CON	PES	
113	SERVICE OFFICE	CON-1	LVP	RB-2	-	GWB	PES	CON	PES	
114	STORAGE	CON-1	CON-2	RB-1	-	GWB	PES	CON	PES	
115	WC-1	CON-1	CT	CT	CT	GWB	PSG	GWB	PSG	
116	CORRIDOR	CON-1	CON-2	MDF	-	GWB	PES	CON	PES	
117	STORAGE	CON-1	CON-2	RB-1	-	GWB	PES	CON	PES	
118	JC	CON-1	CON-3	-	-	GWB	PSG	CON	PSG	
119	WC-2	CON-1	CON-2	-	-	GWB	-	GWB	-	COLD SHELL COMMERCIAL SUITES
120	WC-3	CON-1	CON-2	-	-	GWB	-	GWB	-	COLD SHELL COMMERCIAL SUITES
121	CORRIDOR	CON-1	CON-2	WB	-	CON/GWB	PES	CON	PES	
122	COMMERCIAL	CON-1	CON-2	-	-	GWB	-	CON	-	COLD SHELL COMMERCIAL SUITES
123	COMMERCIAL	CON-1	CON-2	-	-	GWB	-	CON	-	COLD SHELL COMMERCIAL SUITES
124	COMMERCIAL	CON-1	CON-2	-	-	GWB	-	CON	-	COLD SHELL COMMERCIAL SUITES
125	WC-4	CON-1	CON-2	RB-1	-	GWB	-	GWB	-	COLD SHELL COMMERCIAL SUITES
126	MECH	CON-1	CON-4	-	-	GWB	PSG	CON	PSG	
127	BIKE ROOM	CON-1	CON-4	RB-1	-	CON	PES	CON	PES	
128	MAINTENANCE	CON-1	CON-4	-	-	CON/GWB	PSG	CON	PSG	
129	TRASH TERMINATION ROOM	CON-1	CON-4	RB-1	-	CON	PSG	CON	PSG	
130	ELEC	CON-1	CON-4	-	-	CON/GWB	PSG	CON	PSG	
130	FIRE PUMP	CON-1	CON-4	-	-	CON/GWB	PSG	CON	PSG	
131	PARKING GARAGE	CON-1	CON-4	-	-	CON	-	CON	-	
S1-1	STAIR 1	CON-1	P-CON	WB	-	CON	PES	CON	PES	
S2-1	STAIR 2	CON-1	P-CON	WB	-	CON	PES	CON	PES	
LEVEL 2										
200A	CORRIDOR	CON-1	LVP	WB	-	GWB	PES	GWB	PES	
200B	CORRIDOR	CON-1	LVP	WB	-	GWB	PES	GWB	PES	
210	LAUNDRY	CON-1	CON-3	RB-1	-	GWB	PSG	GWB	PSG	
211	WC	CON-1	CT	CT	CT	GWB	PSG	GWB	PSG	
212	COMMUNITY ROOM	CON-1	CON-2	WB	-	GWB	PES	GWB	PES/AC/WC	
212D	STORAGE	CON-1	CON-3	WB	-	GWB	PES	GWB	PES	
212E	JC	CON-1	CON-4	RB-1	FRP	GWB	PSG	GWB	PSG	
220	WASTE ROOM	CON-1	CON-3	RB-1	FRP	GWB	PSG	GWB	PSG	
221	ELEC	CON-1	CON-4	RB-1	-	GWB	PSG	GWB	PSG	
222	ELEC	CON-1	CON-4	RB-1	-	GWB	PSG	GWB	PSG	
S1-2	STAIR 1	CON-1	LVP	WB	-	GWB	PES	GWB	PES	
S2-2	STAIR 2	CON-1	LVP	WB	-	GWB	PES	GWB	PES	
LEVEL 3										
114C	CORRIDOR									
300B	CORRIDOR	CBU	LVP	WB	-	GWB	PES	GWB	PES	
320	WASTE ROOM	CBU	CON-3	RB-1	FRP	GWB	PSG	GWB	PSG	
321	ELEC	CBU	CON-4	RB-1	-	GWB	PSG	GWB	PSG	
322	ELEC	CBU	CON-4	RB-1	-	GWB	PSG	GWB	PSG	
S1-3	STAIR 1	CBU	LVP	WB	-	GWB	PES	GWB	PES	
S2-3	STAIR 2	CBU	LVP	WB	-	GWB	PES	GWB	PES	
LEVEL 4										
114D	CORRIDOR									
400B	CORRIDOR	CBU	LVP	WB	-	GWB	PES	GWB	PES	
420	WASTE ROOM	CBU	CON-3	RB-1	FRP	GWB	PSG	GWB	PES	
421	ELEC	CBU	CON-4	RB-1	-	GWB	PSG	GWB	PSG	
422	ELEC	CBU	CON-4	RB-1	-	GWB	PSG	GWB	PSG	
S1-4	STAIR 1	CBU	LVP	WB	-	GWB	PES	GWB	PES	
S2-4	STAIR 2	CBU	LVP	WB	-	GWB	PES	GWB	PES	
LEVEL 5										
500A	CORRIDOR	CBU	LVP	WB	-	GWB	PES	GWB	PES	
500B	CORRIDOR	CBU	LVP	WB	-	GWB	PES	GWB	PES	
520	WASTE ROOM	CBU	CON-3	RB-1	FRP	GWB	PSG	GWB	PSG	
521	ELEC	CBU	CON-4	RB-1	-	GWB	PSG	GWB	PSG	
522	ELEC	CBU	CON-4	RB-1	-	GWB	PSG	GWB	PSG	
S1-5	STAIR 1	CBU	LVP	WB	-	GWB	PES	GWB	PES	
S2-5	STAIR 2	CBU	LVP	WB	-	GWB	PES	GWB	PES	
LEVEL 6										
600A	CORRIDOR	CBU	LVP	WB	-	GWB	PES	GWB	PES	
600B	CORRIDOR	CBU	LVP	WB	-	GWB	PES	GWB	PES	
620	WASTE ROOM	CBU	CON-3	RB-1	FRP	GWB	PSG	GWB	PSG	
621	ELEC	CBU	CON-4	RB-1	-	GWB	PSG	GWB	PSG	
622	ELEC	CBU	CON-4	RB-1	-	GWB	PSG	GWB	PSG	
S1-6	STAIR 1	CBU	LVP	WB	-	GWB	PES	GWB	PES	
S2-6	STAIR 2	CBU	LVP	WB	-	GWB	PES	GWB	PES	

FINISH SCHEDULE NOTES

1. DWELLING UNITS: MAXIMUM FLAME SPREAD CLASSIFICATION OF INTERIOR FINISHES AT DWELLING UNITS SHALL BE CLASS III.
2. STAIRWELLS, CORRIDORS AND PUBLIC SPACES: MAXIMUM CLASSIFICATION OF INTERIOR FINISHES ENCLOSED IN STAIR WELLS SHALL BE CLASS I. CORRIDORS AND PUBLIC SPACES SHALL BE CLASS II.
3. SEE A9.00, A9.01, & A9.05 FOR RATED WALL AND FLOOR ASSEMBLIES.
4. SEE INTERIOR ELEVATIONS FOR WAINSCOT LOCATION AND HEIGHT.
5. SEE SPECIFICATION SECTION 09 29 00. FOR REQUIRED GYP. BD. FINISH LEVELS.
6. ALL 'WET AREAS' TO HAVE WATER-RESISTANT (W.R.) GYP. BOARD AT WALLS
7. REFER TO UNIT PLANS AND ELEVATIONS FOR LIMIT OF FINISHES AT DWELLING UNITS.
8. ALL CEILING FINISHES ARE AT UNDERSIDE OF STRUCTURE, U.O.N.
9. CLOSETS AND STORAGE SHALL HAVE THE SAME FINISH AS ROOM TO WHICH THEY ARE ANCILLARY INCLUDING FLOORING, U.O.N.
10. SEE SPECS FOR SHEET VINYL ACOUSTIC ABSORPTION REQUIREMENTS
11. ALL CARPETING TO HAVE ADA-COMPLIANT FIRM CUSHION, A MAXIMUM PILE HEIGHT OF 1/2" MAX. AND SHALL BE SECURELY ATTACHED TO THE FLOOR
12. ALL CERAMIC TILE FLOORS IN PUBLIC RESTROOMS AND SHOWERS TO BE CONSTRUCTED OF GRIT-FACED, SLIP RESISTANT TILE, WITH MAXIMUM SLOPE TO ANY DRAIN OF 2%
13. STARTING POINT FOR FULL FLOOR TILES SHALL ALIGN WITH THE CENTERLINE OF DOOR OPENING AND TILE GROUT JOINT.
14. PAINT ALL EXPOSED GYPSUM BOARD SURFACES, INCLUDING SOFFITS AND FASCIA, TYP. U.O.N. TO MATCH ADJACENT SURFACES.
15. PAINT ALL INTERIOR GALVANIZED STEEL PIPE HANDRAILS AND BRACKETS, U.O.N.
16. PAINT ANY EXPOSED SPRINKLER PIPING, METAL DUCTWORK, OR ELECTRICAL CONDUIT (UNLESS FACTORY PRE-FINISHED) ON THE INTERIOR TO MATCH THE BASE COLOR OF THE ADJACENT SURFACE, U.O.N.
17. ALL FLOOR SURFACES ARE TO BE SLIP RESISTANT
18. CONTRASTING STRIPING TO BE PROVIDED AT EACH STEP AND LANDING ON ALL EXTERIOR STAIRS AND AT LOWEST STEP AND LANDING ON INTERIOR STAIRS PER 11B-504
19. SEE FLOORING TRANSITION DETAILS ON **A10.X**
20. SEE INTERIOR FINISH PLANS FOR ADDITIONAL INFORMATION ON FINISH MATERIALS WHERE NOTED.
21. SEE APPENDIX IN SPECIFICATIONS FOR INTERIOR FINISHES AT COMMON AREAS AND UNITS. FOR FLOORING EXTENTS SEE UNIT PLAN AND ENLARGED PLANS FOR COMMON AREAS ON SHEETS IN THE A4 AND A5 SERIES.
22. PROVIDE LEVEL **X** FINISH AT GYPSUM BOARD WALLS AND CEILINGS AREAS, AS IDENTIFIED PER SPECIFICATION SECTION 09 29 00.

FINISH MATERIAL KEY

AT	ACOUSTIC TILE
AC	ACOUSTICAL CLOUD
CBU	CONCRETE-BASED UNDERLAYMENT
CON-1	CONCRETE
CON-2	POLISHED CONCRETE
CON-3	SEALED CONCRETE
CON-4	BROOMED CONCRETE
CPT	CARPET TILE
CT	CERAMIC TILE
FRP	FIBER GLASS REINFORCED PLASTIC PANEL
GB	GYP BD. TAPED ONLY
GWB	GYPSUM WALL BOARD
LVP	LUXURY VINYL PLANKS
PSG	PAINT, SEMI-GLOSS
PG	PAINT, GLOSSY
PES	PAINT, EGGSHELL
MDF	MEDIUM DENSITY FIBERBOARD
RB-1	RUBBER BASE - COMMON AREAS
RB-2	RUBBER BASE - OFFICE
RB-3	RUBBER BASE - RESIDENTIAL
WB	WOOD BASE
WC	WOOD CEILING SYSTEM

PYATOK
1611 TELEGRAPH AVE.
SUITE 200
OAKLAND, CA 94612
T. 510.465.7010 | F. 510.465.8575
www.pyatok.com

THE UNITY COUNCIL
1900 FRUITVALE AVE
#2A
OAKLAND, CA 94601

2700 INTERNATIONAL
OAKLAND, CA 94601

STAMP:

ISSUE SCHEDULE

100 SD	5/11/22
50 DD	7/15/22
100 DD	9/16/22
50 CD	11/18/22
PERMIT SET	12/09/22

REVISION SCHEDULE

NO.	ISSUE	DATE

JOB NUMBER:	1937
DRAWN BY:	MA, DV, TN, MO, SP
CHECKED BY:	Checker
ISSUE DATE:	12/09/22
SCALE:	12" = 1'-0"

TITLE:

FINISH SCHEDULE

SHEET:

A10.00

PRELIMINARY - Not for Construction -

© 2019 PYATOK ARCHITECTURE & URBAN DESIGN

12/8/2022 6:13:39 PM

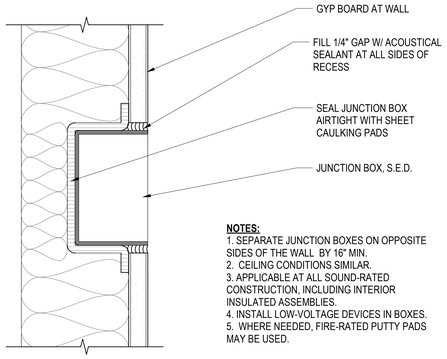

TYP. JUNCTION BOX AT SOUND-RATED CONSTRUCTION 8
6" = 1'-0"

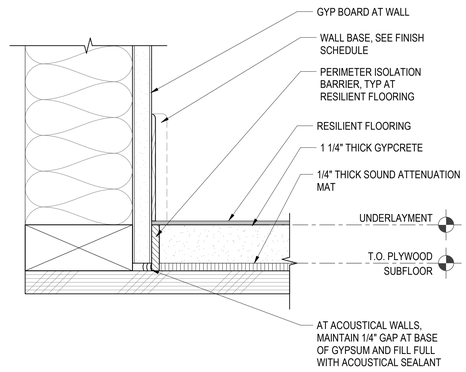

STD DTL - GYPCRETE ISOLATION AT RESIL FLOORING 5
6" = 1'-0"

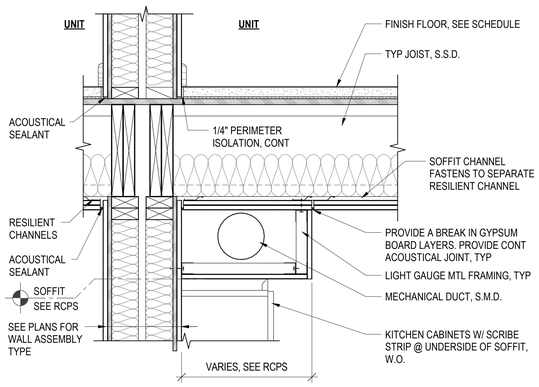

UNIT INTERIOR SOFFIT DETAIL 3
1 1/2" = 1'-0"

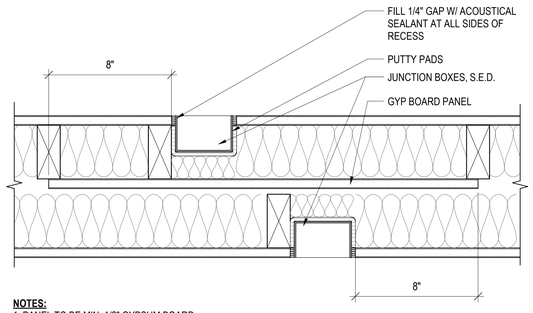

JUNCTION BOX ISOLATION WHERE LESS THAN 16" SEPARATION 7
3" = 1'-0"

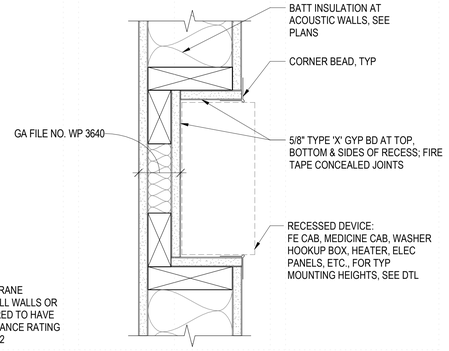

**APPLIES TO MEMBRANE PENETRATIONS IN ALL WALLS OR PARTITIONS REQUIRED TO HAVE A 1-HR. FIRE-RESISTANCE RATING PER 2019 CBC 714.4.2

INTERIOR WALL RECESS 4
3" = 1'-0"

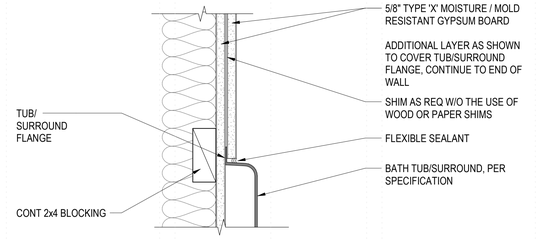

BATH TUB FLANGE AT WALL 2
3" = 1'-0"

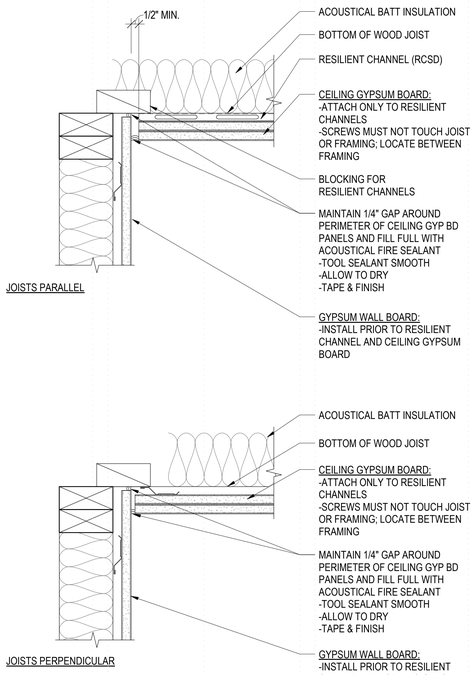

RESILIENT CHANNEL AT CLG & WALL INTERSECTION 9
3" = 1'-0"

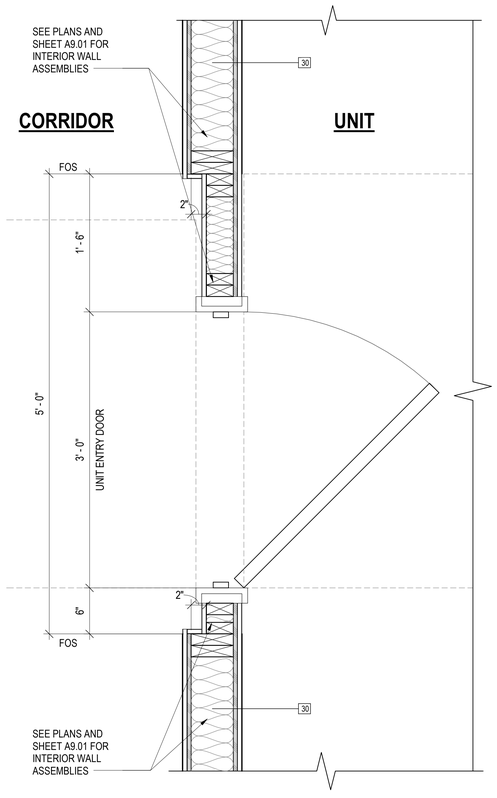

UNIT TYPE A3 - ADAPTABLE (CBC 11B) 6
1 1/2" = 1'-0"

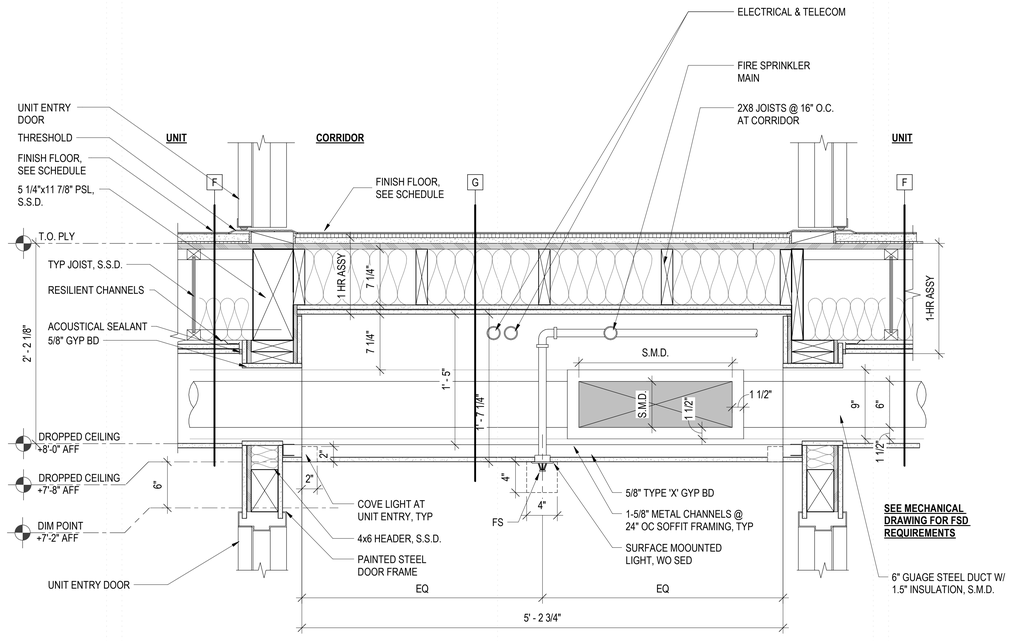

CORRIDOR SECTION AT UNIT ENTRY 1
1 1/2" = 1'-0"

PYATOK
1611 TELEGRAPH AVE.
SUITE 200
OAKLAND, CA 94612
T. 510.465.7010 | F. 510.465.8575
www.pyatok.com

THE UNITY COUNCIL
1900 FRUITVALE AVE
#2A
OAKLAND, CA 94601

2700 INTERNATIONAL
OAKLAND, CA 94601

STAMP:
LICENSED ARCHITECT
PETER WALLER
C-23554
4/30/2023
STATE OF CALIFORNIA

ISSUE SCHEDULE

100 SD	5/11/22
50 DD	7/15/22
100 DD	9/16/22
50 CD	11/18/22
PERMIT SET	12/09/22

REVISION SCHEDULE

NO.	ISSUE	DATE

JOB NUMBER:	1937
DRAWN BY:	MA, DV, TN, MO, SP
CHECKED BY:	Checker
ISSUE DATE:	12/09/22
SCALE:	As indicated

TITLE:
INTERIOR DETAILS

SHEET:
A10.10

PRELIMINARY - Not for Construction -

© 2019 PYATOK ARCHITECTURE & URBAN DESIGN

12/8/2022 6:13:43 PM

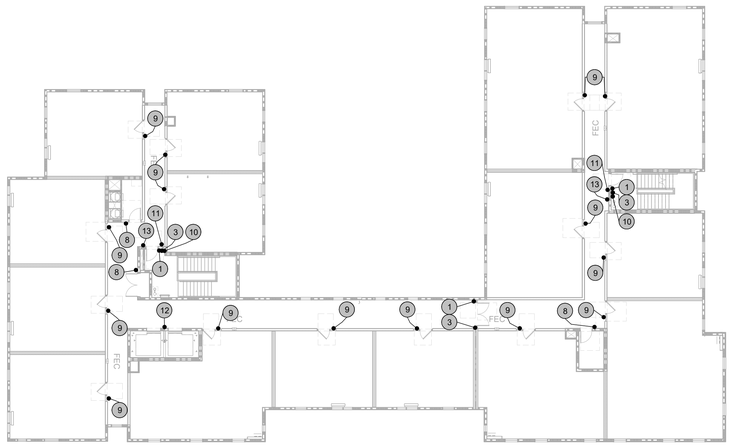

LEVEL 6 - SIGNAGE PLAN (6)
1/16" = 1'-0"

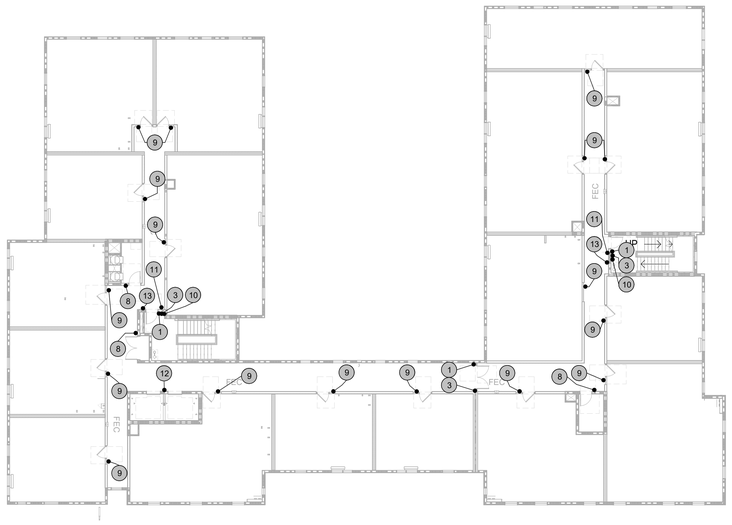

LEVEL 3 - SIGNAGE PLANS (3)
1/16" = 1'-0"

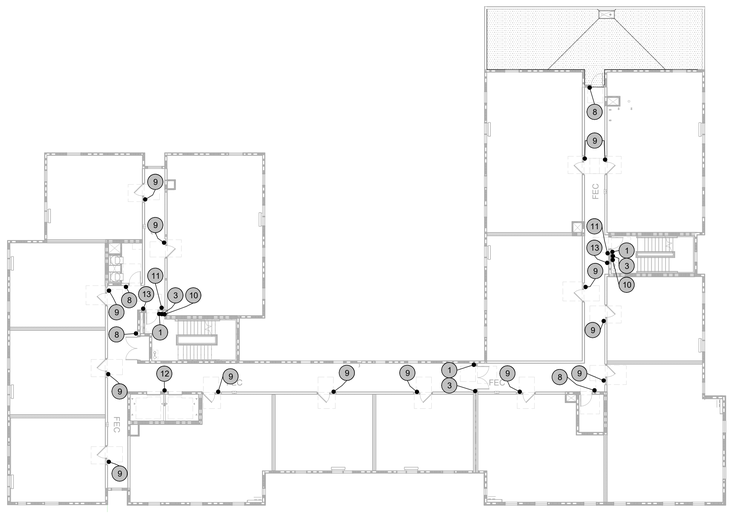

LEVEL 5 - SIGNAGE PLAN (5)
1/16" = 1'-0"

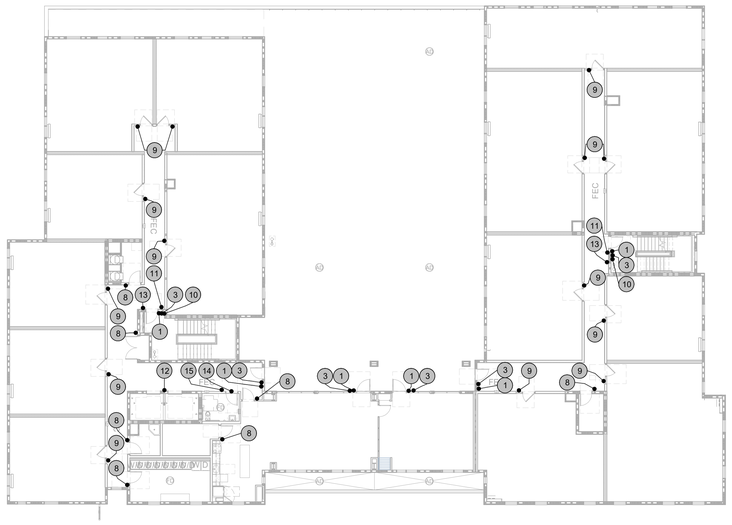

LEVEL 2 - SIGNAGE PLAN (2)
1/16" = 1'-0"

LEVEL 4 - SIGNAGE PLAN (4)
1/16" = 1'-0"

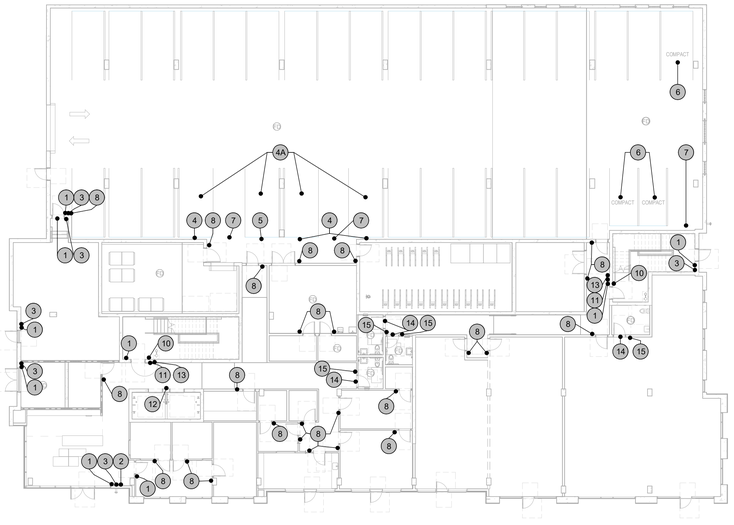

LEVEL 1 - SIGNAGE PLAN (1)
1/16" = 1'-0"

SIGNAGE GENERAL NOTES

1. CONTRACTOR TO PROVIDE SHOP DRAWINGS FOR ARCHITECT REVIEW. SIGNAGE TO CONFORM TO ALL APPLICABLE CODES AND JURISDICTIONS FOR TEXT AND GRAPHICS.
2. SEE DETAILS ON **G0.XX** FOR MOUNTING HEIGHTS, U.O.N.
3. CALIFORNIA GRADE 2 BRAILLE PER CBC **11B-703**
4. ALL TEXT PER CBC **11B-703**
5. ALL PICTOGRAMS PER CBC **11B-703**
6. SIGN POLES TO BE 2" INSIDE DIAMETER STANDARD PIPE POST WITH PIPE CAP. HARDWARE TO BE SINGLE CLAMP-ON U-BRACKET WITH THEFT-PROOF CAP SCREWS.
7. INSTALL SIGNAGE WITH TAMPER-RESISTANT FASTENERS. WHERE DOOR-MOUNTED, SIGNAGE TO BE MOUNTED WITH NON-STAINING ADHESIVE / DOUBLE-STICK TAPE.
8. UNIT NUMBERS ARE FOR CONSTRUCTION REFERENCE ONLY AND ARE SUBJECT TO CHANGE. VERIFY UNIT NUMBERING WITH ARCHITECT PRIOR TO FABRICATION.

SIGNAGE PLAN KEY

SYMBOL	SIGN
1	EXIT SIGN - DIRECTIONAL SIGNAGE LEADING TO THE EXIT
2	EXIT SIGN - GRADE LEVEL EXTERIOR EXIT DOOR
3	TACTILE EXIT SIGNAGE
4	ACCESSIBLE PARKING SPACE
4A	ACCESSIBLE PARKING SPACE SYMBOL
5	VAN ACCESSIBLE PARKING SPACE
6	COMPACT PARKING SPACE SYMBOL
7	NO PARKING SIGNAGE
8	ROOM ID
9	UNIT ID
10	STAIRWELL ID (STAIR SIDE)
11	STAIRWELL ID TACTILE
12	ELEVATOR SIGN
13	EVACUATION PLAN
14	ALL-GENDER RESTROOM DOOR SIGN
15	ALL-GENDER RESTROOM WALL SIGN

PYATOK
1611 TELEGRAPH AVE.
SUITE 200
OAKLAND, CA 94612
T. 510.465.7010 | F. 510.465.8575
www.pyatok.com

THE UNITY COUNCIL
1900 FRUITVALE AVE
#2A
OAKLAND, CA 94601

2700 INTERNATIONAL
OAKLAND, CA 94601

STAMP:
LICENSED ARCHITECT
PETER WALLER
C-23591
4/30/2023
STATE OF CALIFORNIA

ISSUE SCHEDULE

100 SD	5/11/22
50 DD	7/15/22
100 DD	9/16/22
50 CD	11/18/22
PERMIT SET	12/09/22

REVISION SCHEDULE

NO.	ISSUE	DATE

JOB NUMBER:	1937
DRAWN BY:	Author
CHECKED BY:	Checker
ISSUE DATE:	12/09/22
SCALE:	As indicated

TITLE:
SIGNAGE PLANS

SHEET:
A10.30

PRELIMINARY - Not for Construction -

© 2019 PYATOK ARCHITECTURE & URBAN DESIGN

12/9/2022 6:13:52 PM

GENERAL STRUCTURAL NOTES

GENERAL NOTES

1. THE INTENT OF THESE DRAWINGS IS TO SHOW ALL ITEMS NECESSARY TO COMPLETE THE STRUCTURE. FOR ITEMS, METHODS, AND/OR MATERIALS NOT SHOWN. THE MINIMUM REQUIREMENTS OF THE 2019 CBC SHALL GOVERN. ALL WORK AND CONSTRUCTION SHALL COMPLY WITH ALL OTHER APPLICABLE BUILDING CODES, SOIL REPORTS, REGULATIONS AND SAFETY REQUIREMENTS.
2. NOTES AND DETAILS ON DRAWINGS SHALL TAKE PRECEDENCE OVER GENERAL NOTES AND TYPICAL DETAILS. IF CERTAIN FEATURES ARE NOT FULLY SHOWN OR CALLED FOR ON THE DRAWINGS OR SPECIFICATIONS, THEIR CONSTRUCTION SHALL BE OF THE SAME CHARACTER AS FOR SIMILAR CONDITIONS THAT ARE CALLED FOR OR SHOWN.
3. THE CONTRACT STRUCTURAL DRAWINGS AND SPECIFICATIONS REPRESENT THE FINISHED STRUCTURE. THEY DO NOT INDICATE THE METHOD OF CONSTRUCTION. IT SHALL BE THE CONTRACTOR'S SOLE RESPONSIBILITY TO DESIGN AND PROVIDE ADEQUATE SHORING, TEMPORARY BRACING AND FORMWORK, ETC., AS REQUIRED FOR THE PROTECTION OF LIFE AND PROPERTY. DURING THE CONSTRUCTION OF THIS BUILDING SHOWING AND BRACING SHALL REMAIN IN PLACE UNTIL FLOORS, ROOF AND WALL SHEATHING HAVE BEEN ENTIRELY CONSTRUCTED. SHORING DRAWINGS AND CALCULATIONS SHALL BE SEALED BY REGISTERED ENGINEER AND SUBMITTED TO THE ARCHITECT AND OR ENGINEER FOR REVIEW. OBSERVATION VISITS TO THE SITE BY THE ARCHITECT, ENGINEER OR CONSTRUCTION MANAGER SHALL NOT RELIEVE THE CONTRACTOR OF SUCH RESPONSIBILITY.
4. THE CONTRACTOR SHALL CHECK AND VERIFY ALL DIMENSIONS WITH THE ARCHITECTURAL, ELECTRICAL, MECHANICAL, AND PLUMBING DRAWINGS BEFORE PREPARING SHOP DRAWINGS, FABRICATION OR CONSTRUCTION. SEE ARCHITECTURAL, ELECTRICAL AND MECHANICAL DRAWINGS FOR SIZE AND LOCATIONS OF PIPES, SLEEVES, PITS, VENTS, DUCTS, ETC. AND DETAILS NOT SHOWN ON THE STRUCTURAL DRAWINGS.
5. ALL DRAWINGS ARE CONSIDERED TO BE A PART OF THE CONTRACT DOCUMENTS. THE CONTRACTOR SHALL BE RESPONSIBLE FOR THE REVIEW AND COORDINATION OF ALL DRAWINGS AND SPECIFICATIONS PRIOR TO THE START OF CONSTRUCTION. ANY DISCREPANCIES THAT OCCUR SHALL BE BROUGHT TO THE ATTENTION OF THE ARCHITECT OR ENGINEER PRIOR TO START OF CONSTRUCTION SO THAT A CLARIFICATION CAN BE ISSUED. ANY WORK PERFORMED IN CONFLICT WITH THE CONTRACT DOCUMENTS OR ANY CODE REQUIREMENTS SHALL BE CORRECTED BY THE CONTRACTOR AT THEIR OWN EXPENSE AND AT NO EXPENSE TO THE OWNER OR ARCHITECT OR ENGINEER.
6. SEE DRAWINGS OTHER THAN STRUCTURAL FOR: TYPES OF FLOOR FINISH AND THEIR LOCATION, FOR DEPRESSIONS IN FLOOR SLABS, FOR OPENINGS IN WALLS AND FLOORS REQUIRED BY ARCHITECTURAL AND MECHANICAL FEATURES, FOR ROADWAY PAVING, WALKS, RAMPS, STAIRS, CURBS, ETC.
7. CONSTRUCTION MATERIAL SHALL BE SPREAD OUT IF PLACED ON FRAMED ROOF OR FLOOR. LOAD SHALL NOT EXCEED THE DESIGN LIVE LOAD PER SQUARE FOOT. PROVIDE ADEQUATE SHORING AND/OR BRACING WHERE STRUCTURE HAS NOT ATTAINED DESIGN STRENGTH.
8. HOLES AND OPENINGS THROUGH WALLS AND FLOORS FOR DUCTS, PIPING AND VENTILATION SHALL BE COORDINATED BY THE CONTRACTOR WHO SHALL VERIFY SIZES AND LOCATION OF SUCH HOLES OR OPENINGS WITH THE MECHANICAL, PLUMBING, AND ELECTRICAL DRAWINGS AND THEIR SUB-CONTRACTORS.
9. NO PIPES OR DUCTS SHALL BE EMBEDDED IN WALLS UNLESS SPECIFICALLY DETAILED OR APPROVED BY THE ENGINEER.
10. OMISSIONS OR CONFLICTS BETWEEN VARIOUS ELEMENTS OF THE DRAWINGS, NOTES, AND DETAILS SHALL BE BROUGHT TO THE ATTENTION OF THE ARCHITECT AND ENGINEER AND RESOLVED BEFORE PROCEEDING WITH THE WORK.
11. DO NOT USE SCALED DIMENSIONS; USE WRITTEN DIMENSIONS. WHERE NO DIMENSION IS PROVIDED, CONSULT THE ARCHITECT AND ENGINEER FOR CLARIFICATION BEFORE PROCEEDING WITH THE WORK.

DESIGN BASIS

APPLICABLE CODE:	2019 CALIFORNIA BUILDING CODE (CBC) WITH ADOPTION OF THE INTERNATIONAL BUILDING CODE (IBC), 2018 EDITION.	
VERTICAL DEAD LOAD:	ROOF	36 psf
	FLOOR	30 psf
	CONC. PODIUM	VARIES
VERTICAL LIVE LOAD:	ROOF	VARIES, 20 psf MAX.
	FLOOR - RESIDENTIAL	40 psf
	FLOOR - CORRIDOR & COURTYARD	100 psf
RAIN INTENSITY:	2019 CBC W/ ASCE 07-16 (CHAPTER 8):	
	RAIN INTENSITY: NOAA ATLAS 14 POINT PRECIPITATION FREQUENCY ESTIMATES: CA	i = 1.27 in/hr
WIND DESIGN:	ENVELOPE PROCEDURE, PART2-ASCE 07-16 (SECTION 28.5)	
	BASIC WIND SPEED	92 mph
	EXPOSURE	B
	IMPORTANCE FACTOR	1.0
	RISK CATEGORY	II
	HILL SHAPE	NO TOPOGRAPHIC OBSTRUCTIONS
	MEAN ROOF HEIGHT	67.5 ft
	NET DESIGN WIND PRESSURE P_S	VARIES
SEISMIC DESIGN:	2019 CBC W/ ASCE 07-16 REQUIREMENTS	
	SEISMIC DESIGN CATEGORY: (SECTION 12.5)	D
	SOIL SITE CLASS (ASSUMED)	D
	RISK CATEGORY (TABLE 1.5-1)	II
	LIGHT FRAMED WOOD SYSTEM (LFW):	
	RESPONSE MODIFICATION COEFFICIENT (TABLE 12.2-1)	R = 6.5
	SYSTEM OVERSTRENGTH FACTOR (TABLE 12.2-1)	Ω_o = 2.5
	DEFLECTION AMPLIFICATION FACTOR (TABLE 12.2-1)	Cd = 4
	IMPORTANCE FACTOR (TABLE 1.5-2)	Ie = 1.0
	STEEL SPECIAL MOMENT FRAME SYSTEMS (SSMF):	
	RESPONSE MODIFICATION COEFFICIENT (TABLE 12.2-1)	R = 6.5
	SYSTEM OVERSTRENGTH FACTOR (TABLE 12.2-1)	Ω_o = 3
	DEFLECTION AMPLIFICATION FACTOR (TABLE 12.2-1)	Cd = 4
	IMPORTANCE FACTOR (TABLE 12.2-1)	Ie = 1.0
	SPECIAL CONCRETE SHEARWALL SYSTEM (SRCS):	
	RESPONSE MODIFICATION COEFFICIENT (TABLE 12.2-1)	R = 5.0
	SYSTEM OVERSTRENGTH FACTOR (TABLE 12.2-1)	Ω_o = 2.5
	DEFLECTION AMPLIFICATION FACTOR (TABLE 12.2-1)	Cd = 5.0
	MAPPED SPECTRAL RESPONSE ACCELERATION:	
	MAPPED MCE SPECTRA RESPONSE (SECTION 11.4.1)	Ss = 1.92g
	MAPPED MCE SPECTRA RESPONSE (ONE SECOND) (SECTION 11.4.1)	S1 = 0.740g
	SPECTRAL RESPONSE COEFFICIENTS:	
	DESIGN SPECTRAL ACCELERATION (SECTION 11.4.3)	Sds = 1.280g
	DESIGN SPECTRAL ACCELERATION (ONE SECOND) (SECTION 11.4.4)	Sd1 = 0.830g
	SOIL FACTOR COEFFICIENTS:	
	SITE COEFFICIENT, Fa (SECTION 11.4-1)	Fa = 1.0
	SITE COEFFICIENT, Fv (SECTION 11.4-2)	Fv = 1.7
	SEISMIC COEFFICIENT: (ASD CONC. STRUCT.)	v = 0.0179 W
	SEISMIC COEFFICIENT: (ASD WOOD STRUCT.)	v = 0.138 W

GEOTECHNICAL CRITERIA:

BASED ON THE PROVISIONS SET FORTH IN THE GEOTECHNICAL REPORT PREPARED BY:	ROCKRIDGE GEOTECHNICAL
REPORT #	22-2216
DATED	JUNE 17, 2022
ALLOWABLE SOIL BEARING PRESSURE:	
DEAD + LIVE	4000 psf
DEAD + LIVE + WIND OR SEISMIC	5300 psf
COEFFICIENT OF FRICTION:	
ON HARD NATIVE MATERIALS	0.3
PASSIVE PRESSURE:	250 pcf
MODULES OF SUBGRADE REACTION:	25 pci
ALL ENGINEERED FILL SHALL HAVE A MINIMUM RELATIVE COMPACTION PER PROJECT GEOTECHNICAL REPORT	

WOOD

1. ALL STRUCTURAL WOOD WORK SHALL BE DONE IN ACCORDANCE WITH THE PROVISIONS OF THE 2019 CBC.
2. ALL STRUCTURAL LUMBER SHALL BE DOUGLAS FIR-LARCH OF THE GRADE INDICATED BELOW OR BETTER, UNLESS OTHERWISE NOTED ON PLANS. ALL WOOD WILL HAVE A MAXIMUM MOISTURE CONTENT OF 19% AT TIME OF USE AND SURFACE DRY-GREEN.

JOISTS AND RAFTERS	NO.1
POSTS, BEAMS AND HEADERS	NO.1
STUDS, BLOCKINGS, LIGHT FRAMING AND MISC.	NO.2
WALL PLATES	NO.2
WOOD SILL (P.T.)	NO.2
PRESSURE TREATED (P.T.) JOIST, BEAMS AND POSTS	NO.2

3. GLUE-LAMINATED BEAMS (GLB) SHALL BE IN ACCORDANCE WITH ANSI/AITC A190.1 AND ASTM D3737. CONTINUOUS IN-PLANT INSPECTION PER 2019 CBC REQUIREMENTS PERFORMED BY A CERTIFIED INSPECTOR IS REQUIRED FOR ALL NEW GLB LARGER THAN 5 1/8x18 OR FOR SPANS GREATER THAN 32 FEET. ALL GLB SHALL BE INDUSTRIAL GRADE TYPICAL, CAMBER TO RADIUS OF 3,500 FEET, AND FABRICATED WITH EXTERIOR GLUE UNLESS OTHERWISE NOTED ON PLAN

SIMPLE SPAN BEAM	24FV4
CANTILEVER AND CONTINUOUS BEAM	24FV8

A. AT EXPOSED GLUE-LAMINATED BEAMS, USE ROSBORO GLULAM.

SIMPLE SPAN BEAM - PORT ORFORD CEDAR	22F-V/POC2
CANTILEVER AND CONTINUOUS BEAM - PORT ORFORD CEDAR	22F-V/POC1
SIMPLE SPAN BEAM - ALASKA YELLOW CEDAR	20F-V13
CANTILEVER AND CONTINUOUS BEAM - ALASKA YELLOW CEDAR	20F-V12

4. ENGINEERED LUMBERS SHALL BE MANUFACTURED BY I LEVEL WEYERHAEUSER OR BOISE CASCADE EQUIVALENT APPROVED ICC MANUFACTURED PRODUCT.

WEYERHAEUSER:	
LVL MICRO-LAMS	2.2E
LSL TIMBER STRAND	1.55E
PSL PARALLEL STRAND LUMBER (BEAMS)	2.2E
PSL PARALLEL STRAND LUMBER (POSTS)	1.8E
I JOIST PER PLAN	U.O.N.
BOISE CASCADE:	
VERSA-LAM 2400	1.7E
VERSA-LAM 2650	1.7E
VERSA-LAM 2800	2.0E
VERSA-LAM 3100	2.0E
BCI PER PLAN	U.O.N.

5. PLYWOOD SHEATHING OR OSB SHEATHING:

ROOF	15/32" INCH APA RATED 24/0 EXPOSURE 1. (4 PLY MIN.) S.A.D. WHEN RADIANT BARRIER SHEATHINGS REQUIRED.
FLOOR	3/4 INCH APA RATED 48/24 EXPOSURE 1. 5 PLY MIN. WITH TONGUE AND GROOVE EDGES GLUED TO SUPPORT, U.O.N. MINIMUM SHEET DIMENSION FOR PANEL SHALL BE 24".
WALL	1/2 INCH APA STRUCT 1, INTERIOR WITH EXTERIOR GLUE. (4 PLY MIN.)

NOTE: LP FLAMEBLOCK STRUCTURAL 1 SHEATHING (ICC ESR-1365) MAY BE USED WHEN REQURIED FOR RATED ASSEMBLY, S.A.D. FOR ASSEMBLY INFORMATION.

6. PRESSURE TREATED LUMBER:
   A. PRESSURE TREATED D.F. SHALL BE AWPA STAMPED. AMMONIACAL COPPER QUAT (ACQ), COPPER BORON AZOLE (CBA), OR BORATE TREATED AWPA STANDARD U1, MINIMUM 0.40 INCH. PENETRATION INCISED.
   B. ALL PRESERVATIVE TREATED LUMBER SHALL BE FIELD-APPLIED WITH PRESERVATIVE WHERE CUT AND DRILLED ON SITE WITH COPPER NAPHTHENATE (2% COPPER AS METAL).
   C. USE HOT DIPPED GALVANIZED HARDWARE PER ASTM A153 OR STAINLESS STEEL OR SILICON BRONZ OR COPPER MATERIAL, IE. BOLTS, NAIL, ETC. FOR ALL ATTACHMENT TO ACQ OR CBA TREATED MEMBERS. (CBC 2304.10.5.1)
7. ALL NAILS SHALL BE COMMON STEEL WIRE NAILS SIZED AND SPACED AS SPECIFIED ON THE DRAWINGS, SCHEDULES AND IN TABLE 2304.10.1 OF THE CALIFORNIA BUILDING CODE. FASTENERS FOR P.T. WOOD SHALL BE HOT-DIPPED GALVANIZED. (CBC 2304.10.5.1)
8. ROUGH HARDWARE WHERE EXPOSED SHALL BE GALVANIZED AND CONFORM TO THE FOLLOWING:

BOLTS	ASTM 307
PLATE HARDWARE	SIMPSON OR EQUIVALENT
HANGERS	SIMPSON OR EQUIVALENT
OTHER ACCESSORIES	SIMPSON OR EQUIVALENT

FOR SIZE AND SPACING SEE PLANS.

9. PENETRATIONS IN WOOD SILLS OR PLATES OF BEARING OR SHEAR WALLS SHALL BE PLACED IN THE CENTER AND SHALL BE NO GREATER IN DIAMETER THAN 1/3 THE WIDTH OF THE LUMBER. HOLES LARGER THAN THOSE NOTED ABOVE MAY BE BORED "ONLY" IF PLATES ARE CONSIDERED.
10. CUTTING, BORING, OR NOTCHING OF GIRDERS, BEAMS, JOISTS AND OTHER STRUCTURAL ELEMENTS SHALL NOT BE PERMITTED WITHOUT THE APPROVAL OF THE ENGINEER UNLESS SPECIFICALLY DETAILED ON THESE DOCUMENTS.
11. HOLES FOR BOLTS IN WOOD SHALL BE DRILLED A MAXIMUM OF 1/16" LARGER THAN BOLT DIAMETER. METAL WASHERS SHALL BE PROVIDED FOR ALL HEAD AND NUTS OF BOLTS AND LAG SCREWS THAT BEAR ON WOOD. CUTS AND HOLES IN P.T. LUMBER SHALL BE SEALED AND TREATED.
12. ALL BOLTS AND SCREWS SHALL BE TIGHTENED AT THE TIME OF ERECTION AND RETIGHTENED BEFORE COMPLETION OF WORK OR INSTALLATIONS THAT WOULD MAKE THE BOLTS INACCESSIBLE.
13. USE DOUBLE FLOOR JOISTS AT NON-BEARING PARTITIONS WHEN PARALLEL TO FLOOR FRAMING. USE BLOCKING AT 4'-0" O.C. WHEN PERPENDICULAR TO FLOOR JOISTS.
14. PROVIDE 2x SOLID BLOCKING BETWEEN JOISTS OR RAFTERS OVER ALL SUPPORTS.
15. ALL WOOD MEMBERS IN CONTACT WITH CONCRETE, GROUT OR MASONRY SHALL BE PRESSURE-TREATED.
16. LIGHT GAUGE FRAMING HARDWARE AND HOLDOWN HARDWARE SHALL BE SIMPSON STRONG-TIE IN ACCORDANCE WITH CATALOGUE C-C-2019. SIMILAR PRODUCTS WITH ICC VALUES EXCEEDING THOSE PUBLISHED FOR SIMPSON STRONG-TIE (ESR-2549, ESR-2551, ESR-2552, AND ESR-2553) MAY BE CONSIDERED AS SUBSTITUTION. ALL SUBSTITUTIONS SHALL SHALL BE SUBMITTED TO THE ENGINEER ON RECORD FOR APPROVAL 10 WORKING DAY PRIOR TO INSTALLATION.
17. PROVIDE LATERAL SUPPORT FOR BEAMS, JOISTS AND RAFTERS AT ENDS AND POINTS OF BEARING.
18. LAG SCREWS PER ANSI/ ASME STANDARD B18.2.1 PROVIDE LEAD HOLE SAME DIAMETER AND DEPTH AS SHANK AND THEN DRILL HOLE 60% - 70% OF SHANK DIAMETER FOR THREADED PORTIONS.

CONCRETE:

1. CONCRETE SHALL BE SUPPLIED AND PLACED IN ACCORDANCE WITH ACI 318-14 AND CBC 2019.
2. CONCRETE SHALL BE AS FOLLOWS:

CONCRETE USE	STRENGTH AT 28 DAYS U.O.N.	W/C RATIO	AGGREGATE SIZE	WEIGHT	SHRINKAGE	FLY ASH (SEE NOTE 6)
SLAB ON GRADE	3000 psi	0.45 MAX.	3/4" (LS)	145pcf	.045%	25% MAX.
FOUNDATION	4000 psi	0.50 MAX.	3/4"	145pcf	-	30% MAX.
COLUMNS AND WALLS	4000 psi	0.45 MAX.	1/2"	145pcf	-	30% MAX.
ELEVATED POST-TENSIONED SLABS	5000 psi	0.45 MAX.	1" (LS)	145pcf	.050%	30% MAX.

(LS) CRUSHED LOW SHRINKAGE ROCK

3. STRENGTH: COMPRESSIVE STRENGTH IN PSI WHEN TESTED IN ACCORDANCE WITH ASTM C39.
4. PORTLAND CEMENT SHALL CONFORM TO ASTM C-150, TYPE II.
5. AGGREGATE FOR STONE CONCRETE SHALL CONFORM TO ASTM C-33. FOR LOW SHRINKAGE AGGREGATE; USE LIMESTONE OR GRANITE. AGGREGATE FOR LIGHTWEIGHT CONCRETE SHALL CONFORM TO ASTM C-330.
6. MAXIMUM SUPPLEMENTARY CEMENTING MATERIALS (SCM): (FLY ASH, SLAG, SILICA FUME) AS A PERCENTAGE OF TOTAL WEIGHT OF CEMENTITIOUS MATERIAL SHALL BE 50%. FLY ASH SHALL MEET ASTM C618 CLASS 'F' OR CLASS 'C' MAXIMUM RECOMMENDED FLY ASH CONTENT BY MASS OF CEMENTITIOUS MATERIAL SHALL FOLLOW SCHEDULE ON NOTE 2. MINIMUM TOTAL SCMS SHALL BE 30%. WATER/CEMENT RATIO SHALL BE BASED ON TOTAL CEMENTITIOUS MATERIAL INCLUDING COMPLEMENTARY CEMENTING MATERIALS.
7. ADMIXTURES: MIX SHALL CONTAIN POLYMER BASED, WATER REDUCING ADMIXTURE. THE FOLLOWING TYPES OF ADMIXTURES ARE ALLOWED AS PLASTICIZERS AND/ OR SET ACCELERATORS TO IMPROVE WORKABILITY.
   A. ASTM C494, TYPES A, C, E, G. HIGH RANGE WATER REDUCERS SHALL ALSO MEET REQUIREMENTS OF ASTM C 1017.
   B. THE INITIAL SLUMP OF THE CONCRETE BEFORE INTRODUCING ADMIXTURES SHOULD BE MINIMUM 2" INCHES. SHRINKAGE - CONTRACTOR TO PROVIDE CONCRETE MIX HISTORY DATA OR PROVIDE TESTING REPORT.
8. SHRINKAGE - CONTRACTOR TO PROVIDE CONCRETE MIX HISTORY DATA OR PROVIDE TEXTING REPORT.
9. MINIMUM REINF. COVER FOR CAST-IN-PLACE CONCRETE:

CONCRETE CAST AGAINST AND PERMANENTLY EXPOSED TO EARTH	3"
CONCRETE FORMED BELOW GRADE OR EXPOSED TO WEATHER:	
NO.6 AND GREATER	2"
NO.5 AND SMALLER	1 1/2"
CONCRETE NOT EXPOSED TO WEATHER NOR IN CONTACT WITH GROUND	
SLABS, WALLS, AND JOISTS: NO.11 AND SMALLER	1"
BEAMS AND COLUMNS: PRIMARY REINF., TIES, STIRRUPS, SPIRALS	1 1/2"

10. PLACEMENT
    A. ALL REINFORCING BARS, ANCHOR BOLTS, AND ALL OTHER CONCRETE INSERTS SHALL BE WELL SECURED IN POSITION PRIOR TO PLACING CONCRETE
    B. CHAMFER ALL CORNERS OF CONCRETE TO PREVENT DAMAGE.
    C. CONSTRUCTION TOLERANCE SHALL COMPLY TO ACI 117.
    D. CONCRETE SHALL BE PLACED IN A CONTINUOUS OPERATION BETWEEN PREDETERMINED CONSTRUCTION JOINTS.
    E. USE VIBRATORS TO CONSOLIDATE CONCRETE. DO NOT USE VIBRATORS TO MOVE CONCRETE.
    F. CONCRETE SHALL BE CONTINUOUSLY CURED FOR 7 DAYS AFTER PLACEMENT IN ANY APPROVED MANNER. FOOTINGS ARE EXEMPTED FROM THIS REQUIREMENT.
    G. PATCHING OF CONCRETE: ALL INSERT HOLES AND OTHER IMPERFECTIONS ON THE SURFACES OF THE CONCRETE SHALL BE FILLED WITH GROUT, BRUSHED AND SACKED TO A UNIFORM FINISH.
11. CONSTRUCTION JOINTS:
    A. CONSTRUCTION JOINTS SHOWN MAY BE PROVIDED AT CONTRACTORS OPTION. ANY PROPOSED CONSTRUCTION JOINTS NOT SHOWN MUST BE SUBMITTED TO THE DESIGN PROFESSIONAL OF RECORD FOR APPROVAL.
    B. ROUGHENED CONSTRUCTION JOINTS (R.C.J.): WHERE NOTED ON DRAWINGS R.C.J. ROUGHEN JOINT TO MINIMUM 1/4 INCH AMPLITUDE:
12. INTERIOR SLAB ON GRADE:
    A. DO NOT ALLOW WATER TO COLLECT ON OR AROUND BUILDING PAD
    B. INITIAL CURING: INITIAL CURING SHALL IMMEDIATELY FOLLOW THE FINISHING OPERATION. CONCRETE SHALL BE KEPT CONTINUOUSLY MOIST AT LEAST OVERNIGHT.
    C. FINAL CURING: IMMEDIATELY FOLLOWING THE INITIAL CURING AND BEFORE THE CONCRETE HAS DRIED. SLABS TO RECEIVE MOISTURE SENSITIVE FLOORING MATERIALS TO BE CONTINUOUSLY CURED FOR 7 DAYS BY WET COVERING OR MOISTURE RETAINING COVERING. LIQUID MEMBRANE CURING COMPOUNDS SHALL NOT BE PERMITTED
    D. S.A.D. AND SPECIFICATIONS FOR INTERIOR SLAB FINISH REQUIREMENTS
13. ALL CONCRETE TO BE REINFORCED UNLESS SPECIFICALLY MARKED "NOT REINFORCED"
14. VAPOR BARRIER: SEE DET. 8/S5.01 AND GEOTECHNICAL REPORT

REINFORCING STEEL

1. REINFORCING STEEL SHALL BE PLACED IN ACCORDANCE WITH ACI 315 AND ACI 318.
2. REINFORCING STEEL SHALL BE AS FOLLOWS:

BAR TYPE	GRADE
#4 BARS AND SMALLER	ASTM A615 GR. 60
#5 BARS AND LARGER	ASTM A615 GR. 60
WELDED BARS	ASTM A706
TIE WIRES AND SPIRALS	ASTM A82
WELDED WIRE FABRIC	ASTM A185
MECHANICAL BAR SPLICE	BAR LOCK OR APPROVED EQUAL

3. DO NOT FIELD BEND OR STRAIGHTEN IN ANY MANNER THAT WILL DAMAGE REINFORCING.
4. PROVIDE SPLICES IN REINFORCING ONLY WHERE SHOWN ON DRAWINGS OR APPROVED IN WRITING BY PROFESSIONAL OF RECORD.
5. WELDING TO CONFORM TO AWS D1.4.

SHOTCRETE: (SEE CONCRETE NOTES)

1. SHOTCRETE SHALL BE SUPPLIED AND PLACED PER ACI 506.
2. USE CONTINUOUS BARS WHERE PRACTICAL TO AVOID LAP AS MUCH AS POSSIBLE.
3. PROVIDE 2 INCH MINIMUM CLEARANCE BETWEEN REINFORCEMENT BARS, INCLUDING LAP SPLICES. CONTACT LAP SPLICES MAY BE USED, PROVIDED PRE-CONSTRUCTION TESTS SHOW THAT ADEQUATE ENCASEMENT OF THE BARS WILL BE ACHIEVED AND PROVIDED THAT THE SPLICE IS ORIENTED SO THAT A PLACE THROUGH THE CENTER OF THE SPLICED BARS IS PERPENDICULAR TO THE SURFACE OF THE SHOTCRETE. FINAL APPROVAL IS BY THE BUILDING OFFICIAL.
4. PLACEMENT.
   1. NOZZLEMAN SHALL HAVE AT LEAST 2 YEARS EXPERIENCE PLACING SHOTCRETE.
   2. DO NOT PLACE SHOTCRETE THROUGH MORE THAN ONE LAYER OF REINFORCING UNLESS PREQUALIFIED WITH TEST PANEL.
   3. MAX. REINF. BAR SIZE SHALL BE #5 UNLESS PRE QUALIFIED WITH TEST PANEL.
   4. KEEP CONTINUOUSLY MOIST FOR 24 HOURS AFTER PLACEMENT.

POST-TENSIONED (SEE CONCRETE NOTES)

1. MINIMUM REINF. COVER FOR CAST-IN-PLACE CONCRETE (PRESTRESSED):

CONCRETE CAST AGAINST AND PERMANENTLY EXPOSED TO EARTH	3"
CONCRETE EXPOSED TO EARTH OR WEATHER WALL PANELS, SLABS, JOISTS	1"
OTHER SHAPES AND PLATES	1 1/2"
CONCRETE NOT EXPOSED TO WEATHER NOR IN CONTACT WITH GROUND:	
SLABS, WALLS, JOISTS	3/4"
BEAMS AND COLUMNS: PRIMARY REINFORCEMENT	1 1/2"
TIES, STIRRUPS, SPIRALS	1"

2. REFERENCE STANDARDS - POST-TENSIONED CONCRETE SHALL CONFORM TO ALL REQUIREMENTS OF THE FOLLOWING DOCUMENTS, EXCEPT AS MODIFIED BELOW:

"STANDARD SPECIFICATION FOR STRUCTURAL CONCRETE"	ACI 301
"BUILDING CODE REQUIREMENTS FOR STRUCTURAL CONCRETE"	ACI 318
"POST TENSIONING MANUAL"	PTI
"SPECIFICATION FOR UNBONDED SINGLE STRAND TENDONS"	PTI
"FIELD PROCEDURES MANUAL FOR UNBOUNDED SINGLE STRAND TENDONS"	PTI

3. FIELD FOREMAN - THE FIELD FOREMAN RESPONSIBLE FOR THE PLACEMENT OF ALL POST-TENSIONING SHALL HAVE A MINIMUM OF THREE (3) YEARS EXPERIENCE I N THIS CAPACITY FOR THIS TYPE OF CONSTRUCTION.
4. P/T STRAND QUALITY - ONE SAMPLE OF EACH REEL OR HEAT SHALL BE TESTED BY AN APPROVED LABORATORY. TEST RESULTS OR MILL CERTIFICATES SHALL BE SUBMITTED TO THE ENGINEER BEFORE STRESSING OF TENDONS. POST-TENSIONING TENDONS SHALL BE LOW-RELAXATION QUALITY, AND SHALL CONFORM TO THE FOLLOWING:

SEVEN WIRE STAND ASTM DESIGNATION	A-416
1/2" DIAMETER STRAND AREA	0.153 N SQ.
ULTIMATE STRENGTH	270 ksi

5. P/T HARDWARE QUALITY - ALL ANCHORAGES, COUPLERS AND MISCELLANEOUS HARDWARE SHALL CONFORM TO THE REQUIREMENTS OF AN ENCAPSULATED SYSTEM PER THE PTI "SPECIFICATION."
6. P/T SHEATHING QUALITY - UNBONDED STRANDS SHALL BE ENCASED IN SLIPPAGE SHEATHING THAT SHALL CONSIST OF A 50 MIL. THICK WATERPROOF CONTINUOUSLY EXTRUDED SEAMLESS PLASTIC TUBING CAPABLE OF PREVENTING THE PENETRATION OF MOISTURE AND CEMENT PASTE, AND WILL CONTAIN A RUST-INHIBITING GREASE COATING. TEARS IN THE SHEATHING SHALL BE REPAIRED TO RESTORE THE WATER TIGHTNESS OF THE SHEATHING.
7. SHOP DRAWINGS - THE CONTRACTOR SHALL SUBMIT SHOP DRAWINGS STAMPED BY AN ENGINEER LICENSED IN THE STATE OF CALIFORNIA SHOWING TENDON LAYOUT, DEAD-END AND STRESS-END LOCATIONS AND TENDON SUPPORT LAYOUTS, WITH DETAILS NECESSARY FOR INSTALLATION FOR THE ENGINEER'S REVIEW.
8. TENDON PLACEMENT - CARE SHALL BE TAKEN THAT TENDONS ARE LOCATED AND HELD IN THEIR DESIGNED POSITIONS. TOLERANCES FOR THE LOCATION OF THE PRESTRESSING STEEL SHALL NOT BE MORE THAN ±1/4'' VERTICALLY, EXCEPT AS NOTED OR REVIEWED BY THE ENGINEER. ACCESS TO STRESSING ENDS SHALL BE MAINTAINED WHERE SHOWN.
9. TENDON ADJUSTMENTS - SLIGHT DEVIATIONS IN THE HORIZONTAL SPACING OF THE SLAB TENDONS WILL BE PERMITTED WHEN REQUIRED TO AVOID OPENINGS, INSERTS, AND DOWELS, WHICH ARE SPECIFICALLY LOCATED. WHERE LOCATIONS OF TENDONS SEEM TO INTERFERE WITH EACH OTHER, ONE TENDON MAY BE MOVED HORIZONTALLY IN ORDER TO AVOID THE INTERFERENCE.
10. TENDON BUNDLES - THE MAXIMUM ALLOWABLE NUMBER OF STRANDS PER BUNDLE IS FIVE (5).
11. TWISTING - TWISTING OR ENTWINING OF INDIVIDUAL TENDONS WITHIN A BUNDLE OR A BEAM SHALL NOT BE PERMITTED.
12. PROFILES - PROFILES SHALL CONFORM TO CONTROLLING POINTS SHOWN ON THE DRAWINGS AND SHOULD BE IN AN APPROXIMATE PARABOLIC DRAPE BETWEEN SUPPORTS, UNLESS OTHERWISE NOTED. LOW POINTS ARE AT MIDSPAN UNLESS OTHERWISE NOTED. ALL DIMENSIONS SHOWING THE VERTICAL LOCATION OF PRESTRESSING TENDONS ARE TO THE CENTER OF GRAVITY OF THE STRAND (CGS) UNLESS OTHERWISE NOTED.
13. MINIMUM CHAIRING - TENDONS SHALL BE SECURED TO A SUFFICIENT NUMBER OF POSITIONING DEVICES TO ENSURE CORRECT LOCATION DURING AND AFTER THE PLACING OF THE CONCRETE, AND SHALL BE SUPPORTED AT A MAXIMUM OF 4'-0'' ON CENTER. CHAIRS GREATER THAN 2.5'' IN SIZE SHALL BE STAPLED TO THE FORMWORK.
14. BLOCKOUTS - ALL POCKETS OR BLOCKOUTS REQUIRED FOR ANCHORAGE SHALL BE ADEQUATELY REINFORCED SO AS NOT TO DECREASE THE STRENGTH OF THE STRUCTURE. ALL POCKETS SHOULD BE WATERPROOFED TO ELIMINATE WATER LEAKAGE THROUGH OR INTO THE POCKET.
15. PIPES - PLASTIC OR METAL CONDUITS MAY BE EMBEDDED IN THE SLAB PROVIDING THAT THE FOLLOWING CRITERIA IS MET:
    A. PIPES OTHER THAN ELECTRICAL CONDUITS SHALL NOT BE EMBEDDED IN STRUCTURAL CONCRETE EXCEPT WHERE SPECIFICALLY APPROVED BY THE ENGINEER. MAXIMUM PIPE SIZE SHALL BE 1" DIAMETER AND LOCATED WITHIN THE MIDDLE THIRD OF THE SLAB. MINIMUM SPACING SHALL BE SIX (6) TIMES THE PIPE DIAMETER. PIPES SHALL NOT IMPAIR THE STRENGTH OF THE MEMBER. ELECTRICAL PIPES SHALL BE LIMITED TO SERVICE LIGHTING IN PARKING GARAGE ONLY.
    B. CONDUITS MUST NOT INTERRUPT THE POST-TENSIONING TENDONS.
    C. COLUMN AREAS SHOULD BE AVOIDED.
    D. IT IS UNDESIRABLE TO HAVE EXCESS AMOUNTS OF CONDUIT ENTERING THE SLAB FROM ONE LOCATION. IF THIS CONDITION MIGHT OCCUR, CONTACT THE ENGINEER FOR ASSISTANCE.
16. PENETRATIONS - PENETRATIONS SHALL NOT BE PERMITTED IN BEAMS OR DROP CAPS EXCEPT AS SHOWN IN P/T DRAWINGS OR TYPICAL DETAILS.
17. INSERTS - ALL INSERTS AND SLEEVES SHALL BE CAST IN PLACE WHENEVER POSSIBLE. DRILLED AND POWER-DRIVEN FASTENERS WILL BE PERMITTED ONLY WHEN IT CAN BE SHOWN THAT THE INSERTS WILL NOT SPALL THE CONCRETE AND ARE LOCATED TO AVOID THE TENDONS AND ANCHORAGES. THE CONTRACTOR MUST LOCATE TENDONS ON THE SURFACE SLAB.
18. CHLORIDES - GROUT OR CONCRETE CONTAINING CHLORIDES SHALL NOT BE USED.
19. PUMPED CONCRETE - IF CONCRETE IS PLACED BY THE PUMP METHOD, THEN HORSES SHALL BE PROVIDED TO SUPPORT THE HOSE. THE HOSE SHALL NOT BE ALLOWED TO RIDE ON THE TENDONS. CONCRETE CONSOLIDATION - THE CONTRACTOR SHALL TAKE PRECAUTIONS TO ASSURE COMPLETE CONSOLIDATION AND DENSIFICATION OF CONCRETE BEHIND ALL POST-TENSIONING ANCHORAGES.
20. CONCRETE STRENGTH AT STRESSING - AT TRANSFER OF PRESTRESS, CONCRETE SHALL BE 3,000 PSI MINIMUM FOR ANY GIVEN CYLINDER COMPRESSION TEST.
21. TENDON STRESSES SHALL CONFORM TO THE FOLLOWING:

JACKING STRESS	216 ksi
ANCHORAGE STRESS IMMEDIATELY AFTER PRESTRESS TRANSFER	189 ksi

22. EFFECTIVE FORCE - FINAL EFFECTIVE FORCE SHALL BE 26.8 KIPS PER LOW-RELAXATION TENDON, WHEN TENDON LENGTH IS LESS THAN 100 FEET, FOR VARIANCE FROM THIS VALUE, CONTRACTOR SHALL PROVIDE FRICTION AND LONG-TERM LOSS CALCULATIONS FOR THE ENGINEERS REVIEW.
23. TENDON STRESSING - TENSIONING SHALL BE DONE BY JACKING UNDER IMMEDIATE CONTROL OF A PERSON EXPERIENCED IN THIS TYPE OF WORK. CONTINUOUS INSPECTION AND RECORDING OF ELONGATIONS IS REQUIRED DURING ALL STRESSING OPERATIONS.
24. SCHEDULE - STRESSING SHALL BE PERFORMED WITHIN 4 DAYS OF CONCRETE PLACEMENT UNLESS PRIOR APPROVAL HAS BEEN RECEIVED FROM THE ENGINEER.
25. CALIBRATIONS - THE RAM AND ATTENDANT GAUGE USED SHALL HAVE BEEN CALIBRATED WITHIN SIXTY (60) DAYS OF THEIR USE.
26. STRESSING SEQUENCE - UNIFORMLY DISTRIBUTED TENDONS AND TEMPERATURE TENDONS SHALL BE STRESSED BEFORE CONCENTRATED BEAM STRIP (BANDED) TENDONS, AND SLAB TENDONS SHALL BE STRESSED BEFORE BEAM TENDONS.
27. ELONGATIONS - INDIVIDUAL TENDON FIELD READINGS OF ELONGATIONS AND/ OR STRESSING FORCES SHALL NOT VARY BY MORE THAN ±7% FROM CALCULATED REQUIRED VALUES SHOWN ON THE SHOP DRAWINGS. IF THE MEASURED ELONGATIONS VARY FROM CALCULATED VALUES BY MORE THAN ±7%, THE CONTRACTOR SHALL PROVIDE FRICTION CALCULATIONS AND/ OR OTHER JUSTIFICATION TO THE SATISFACTION OF THE ENGINEER.
28. MEMBER FORCES - THE POST-TENSIONED FORCE PROVIDED IN THE FIELD FOR EACH STRUCTURAL MEMBER SHALL NOT BE LESS THAN THE NOTED ON THE STRUCTURAL DRAWINGS. IN THIS CONTEXT, STRUCTURAL MEMBERS ARE BEAMS OR SLABS, SLABS, WHETHER WITH BANDED OR DISTRIBUTED TENDONS, EACH SERVING THEIR RESPECTIVE TRIBUTARY.
29. TENDON ENDS - DO NOT CUT OFF TENDON ENDS UNTIL THE ENTIRE FLOOR SYSTEM HAS BEEN SATISFACTORILY STRESSED AND THE ENGINEER'S REVIEW IS OBTAINED. TENDON LENGTH PROTRUDING BEYOND WEDGES AFTER CUTTING SHALL BE 3/4 INCH ±1/4 INCH. THE STRESSING END ANCHORS AND WEDGES SHALL BE SPRAY PAINTED WITH RUST-OLEUM OR A SIMILAR COATING FOR CORROSION PROTECTION. INSTALL LOCKING TRANSLUCENT GREASE CAPS WITHIN THE FOLLOWING 24-HOUR PERIOD.
30. GROUTING OF STRESSING POCKETS - STRESSING POCKETS SHALL BE FILLED WITH NON-SHRINK GROUT AFTER STRESSING, PAINTING & GREASE-CAPPING TO STOP MOISTURE PENETRATION. SUBMIT SPECIFICATION FOR PROPOSED BONDING AGENT AND GROUT TO ENGINEER FOR REVIEW PRIOR TO USE.
31. DE-SHORING - SLABS OR BEAMS MAY BE DE-SHORED WHEN ALL TENDONS HAVE BEEN SATISFACTORILY STRESSED AND THE ENGINEER'S REVIEW IS OBTAINED, UNLESS SHORING IS REQUIRED TO CARRY FLOORS ON ABOVE LEVELS, OR SHORING IS REQUIRED TO SUPPORT STRUCTURE AT CLOSURE POURS.
32. UNDER NORMAL CONDITIONS AND FOR CONVENTIONAL BUILDINGS SUCH AS THE SUBJECT MATTER, REINFORCED CONCRETE AS WELL AS POST-TENSIONED CONCRETE DEVELOP CRACKS. THE CRACKS ARE DUE TO INHERENT SHRINKAGE OF CONCRETE, CREEP AND RESTRAINING EFFECTS OF VERTICAL AND OTHER STRUCTURAL ELEMENTS TO WHICH THE BEAMS/SLABS ARE TIED.
33. THE CRACKS FORMED ARE NORMALLY COSMETIC. THE SLAB MAINTAINS ITS SERVICEABILITY AND STRENGTH REQUIREMENTS. DUE TO SPECIAL FEATURES OF UNBONDED POST-TENSIONING, IT IS POSSIBLE THAT A NUMBER OF HAIRLINE CRACKS, WHICH WOULD NORMALLY SPREAD OVER A WIDE AREA, WILL INTEGRATE INTO A SINGLE CRACK WITH A WIDTH EXCEEDING 0.01 INCH. IT IS EMPHASIZED THAT ALTHOUGH SPECIAL EFFORT IS MADE TO REDUCE THE POTENTIAL CAUSES AND NUMBER OF SUCH CRACKS, IT IS NOT PRACTICAL TO PROVIDE TOTAL ARTICULATION BETWEEN THE FLOOR SYSTEM AND ITS SUPPORTS AND THEREBY ACHIEVE COMPLETE INHIBITION OF ALL CRACKS.
34. MOST SUCH CRACKS DEVELOP OVER THE FIRST THREE YEARS OF THE LIFE OF THE FLOOR SYSTEM. CRACKS WHICH ARE WIDER THAN 0.01 INCH MAY NEED TO BE PRESSURE EPOXIED. REFER TO THE NOTES UNDER "ALLOWANCES".
35. THE OBJECT OF THE JOINTS PROVIDED IS TO ALLOW MOVEMENT. MOVEMENTS DUE TO CREEP AND SHRINKAGE MAY BE NOTICEABLE AT JOINTS UP TO TWO YEARS AFTER CONSTRUCTION, BEYOND WHICH MOVEMENTS DUE TO VARIATIONS IN TEMPERATURE WILL PERSIST.
36. ALLOWANCES (IN ADDITION TO STEEL SHOWN)
    a. PRESSURE EPOXY ALLOWANCE: THE OWNER SHALL ALLOW FOR 1800 FEET OF PRESSURE EPOXY INJECTION FOR CRACKS WHICH MAY DEVELOP IN THE STRUCTURE DURING THE FIRST THREE YEARS.
    b. REINFORCEMENT ALLOWANCES: THE CONTRACTOR SHALL PROVIDE 15,000 POUNDS OF REINFORCEMENT PER BUILDING FOR THE ENGINEER TO USE AT THE ENGINEER'S DISCRETION DURING CONSTRUCTION.

STEEL

1. STRUCTURAL STEEL TO BE SUPPLIED DETAILED, FABRICATED AND ERECTED IN ACCORDANCE WITH A.I.S.C. SPECIFICATIONS.
2. U.O.N. STEEL SHALL BE AS FOLLOWS:

SHAPE	GRADE
WIDE FLANGE SECTION (WF)	ASTM A992 GR. 50
HOLLOW STRUCTURAL SECTION (HSS)	ASTM A500B GR. 46
STANDARD PIPE	ASTM A53 GR. B
OTHER SHAPES AND PLATES	ASTM A572 GR. 50 , U.O.N.
BOLTS	ASTM A307
HIGH STRENGTH BOLTS	ASTM A325, U.O.N.
THREADED RODS	ASTM A36, U.O.N.
ANCHOR RODS	F1554 GR. 36 TYP., U.O.N.
WELDING ELECTRODES	E-70xx, U.O.N.
WELDED STUDS	FLUX FILLED HEADED STUDS ASTM A108 BY NELSON OR EQUAL.

3. WELDING TO CONFORM TO AWS AND TO BE PERFORMED BY CERTIFIED WELDERS.
4. BUTT WELDS ARE TO BE COMPLETE PENETRATION U.O.N. ALL FILLET WELDS SHOWN ARE MINIMUM REQUIRED BY STRESS. INCREASE WELDS TO A.I.S.C. MINIMUM SIZES BASED ON THICKNESS OF MATERIAL JOINED U.O.N.
5. STEEL BEAMS ARE EQUALLY SPACED BETWEEN DIMENSION POINTS OR GRID LINES, U.O.N.
6. STEEL NOT RECEIVING FIRE PROOFING SHALL BE SHOP PRIMED.
7. ALL STEEL EXPOSED TO WEATHER SHALL BE HOT DIP ZINC GALVANIZED U.O.N.
8. NON SHRINK GROUT: 7500 psi COMPRESSIVE STRENGTH, NON METALLIC CONFORMING TO ASTM 1107. MASTERFLOW 928 OR EQUAL.

LIGHT GAUGE STEEL

1. COLD FORM STEEL USED FOR STUDS, TRACK, BLOCKING, GUSSETS, BRACE STRAPS, ETC. SHALL MEET THE REQUIREMENTS OF THE STEEL STUD MANUFACTURERS ASSOCIATION SSMA (ESR3064P) SEE DETAIL SHEETS FOR SIZES AND THICKNESS REQUIREMENTS.
2. COLD FORM STEEL STUD FRAMING SHALL CONFORM TO THE FOLLOWING:
   54 MIL AND HEAVIER-ASTM A653 SS (50 ksi MINIMUM YIELD)
   43 MIL AND LIGHTER-ASTM A653 SS (33 ksi MINIMUM YIELD)
   EXTERIOR MEMBERS : GALVANIZED G60 MIN.
3. ALL STEEL STUDS, JOIST & TRACK SHALL HAVE A LEGIBLE LABEL, STAMP OR EMBOSSMENT, AT A MAXIMUM OF 48 " O.C., INDICATING THE MANUFACTURER'S NAME, LOGO OR INITIALS, EVALUATION SERVICE REPORT NUMBER, THE MATERIAL BASE METAL THICKNESS (UNCOATED) IN .001 In. AND THE YIELD STRENGTH IF DIFFERENT THAN 33 ksi.
4. MILL CERTIFICATES FROM THE COIL PRODUCER SHALL BE MADE AVAILABLE IF REQUESTED. MILL CERTIFICATE TO INCLUDE AS A MINIMUM THE CHEMICAL COMPOSITION, YIELD STRENGTH, TENSILE STRENGTH, ELONGATION, AND COATING THICKNESS.
5. ALL SECTIONS TO REMAIN UNPUNCHED EXCEPT WALL STUDS MAY BE PUNCHED IN ACCORDANCE WITH ICC HOLE SIZE AND SPACING LIMITATIONS.
6. LATERAL BRIDGING OF COLD FORM STEEL STUDS IS REQUIRED WHEN SHEATHING, INSTALLED DOES NOT CONTINUE FULL HEIGHT ON BOTH SIDES. FOR BRIDGING INSTALLATION SEE TYPICAL DETAIL SHEET.
7. COLD FORM STEEL STUDS SHALL HAVE FULL BEARING AGAINST INSIDE TRACK WEB PRIOR TO STUD AND TRACK ATTACHMENT. STUDS AND TRACKS SHALL BE ATTACHED BY WELDING OR 2-#8 SELF DRILLING SCREWS (ONE EA. FLANGE).
8. PRE-MANUFACTURED HANGERS, CLIPS, ETC. SHALL MEET THE REQUIREMENTS OF "SIMPSON" OR EQUIVALENT.
9. VERTICLIP SL/SLD BY THE STEEL NETWORK ICC ESR-1903.
10. SELF-DRILLING FASTENERS HAVE BEEN DESIGNED IN ACCORDANCE WITH AISI "SPECIFICATION PROVISIONS FOR SCREW CONNECTIONS". FASTENERS SHALL BE #8 SMS U.O.N. ALL SCREWS TO BE GALVANIZED OR CORROSION RESISTANT. SCREWS SHALL CONFORM TO S.A.E. J78.
11. WELDING SHALL BE PERFORMED BY CERTIFIED WELDERS IN A FABRICATION SHOP. ALL WELDING SHALL BE IN ACCORDANCE WITH THE REQUIREMENTS OF THE LATEST AWS D1.3 CODE.
    43 MIL AND LIGHTER SHEET TO SHEET - E60XX
    54 MIL AND HEAVIER SHEET TO SHEET - E70XX
12. BUTT WELDS ON SPLICES SHALL BE USED AT ALL JOINTS IN TRACK. SPLICES IN STUDS OR BRACES SHALL NOT BE PERMITTED. WHERE STUDS ARE BURNED THROUGH BY WELDING PROVIDE SUITABLE STITCH PLATE OF SAME THICKNESS.
13. SEE ADDITIONAL NOTES ON DET. 1/S9.01

STRUCTURAL SHEET INDEX

S1.00	STRUCTURAL TITLE SHEET
S1.01	GENERAL STRUCTURAL NOTES
S1.02	SPECIAL INSPECTION NOTES
S2.01	FOUNDATION PLAN
S2.02A	LEVEL 2 POST-TENSION PLAN
S2.02B	LEVEL 2 REINFORCEMENT PLAN
S2.02C	LEVEL 2 EMBEDMENT PLAN
S2.02D	LEVEL 2 BEARING WALL PLAN
S2.03	LEVEL 3 FLOOR FRAMING PLAN
S2.04	LEVEL 4 FLOOR FRAMING PLAN
S2.05	LEVEL 5 FLOOR FRAMING PLAN
S2.06	LEVEL 6 FLOOR FRAMING PLAN
S2.07	ROOF FRAMING PLAN
S3.01	ELEVATIONS
S3.02	ELEVATIONS
S3.03	MOMENT FRAME ELEVATIONS
S4.01	UNIT FLOOR FRAMING PLANS - UNIT A
S4.02	UNIT FLOOR FRAMING PLANS - UNIT B
S4.03	UNIT FLOOR FRAMING PLANS - UNIT C
S4.04	STAIR 1 FRAMING PLANS
S4.05	STAIR 2 FRAMING PLANS
S4.06	ELEVATOR FRAMING PLANS
S5.01	CONCRETE DETAILS
S5.02	CONCRETE DETAILS
S5.03	CONCRETE DETAILS
S5.04	CONCRETE DETAILS
S5.05	CONCRETE DETAILS
S5.06	CONCRETE DETAILS
S5.07	CONCRETE DETAILS
S5.08	CONCRETE DETAILS
S5.09	CONCRETE DETAILS
S5.10	CONCRETE DETAILS
S5.11	EARTHBOUND DETAILS
S5.12	EARTHBOUND DETAILS
S5.13	EARTHBOUND DETAILS
S5.14	EARTHBOUND DETAILS
S5.15	EARTHBOUND DETAILS
S5.16	EARTHBOUND DETAILS
S5.17	EARTHBOUND DETAILS
S7.01	STEEL DETAILS
S7.02	STEEL DETAILS
S7.03	STEEL DETAILS
S7.04	SIMPSON YIELD-LINK DETAILS
S8.01	WOOD DETAILS
S8.02	WOOD DETAILS
S8.03	WOOD DETAILS
S8.04	WOOD DETAILS
S8.05	WOOD DETAILS
S8.06	WOOD DETAILS
S8.07	WOOD DETAILS
S8.08	CFS HARDY PICTURE FRAME DETAILS
S8.09	CFS HARDY PICTURE FRAME DETAILS
S9.01	LIGHT GAUGE METAL DETAILS
S9.02	LIGHT GAUGE METAL DETAILS

STRUCTURAL OBSERVATION

OBSERVATION BY ELEMENT STRUCTURAL ENGINEERS, INC. OR THEIR DESIGNATED REPRESENTATIVE IS REQUIRED AT THE PROJECT MILESTONES GIVEN BELOW. IT IS THE CONTRACTOR'S RESPONSIBILITY TO NOTIFY ELEMENT STRUCTURAL ENGINEERS, INC. AT LEAST 4 DAYS IN ADVANCE OF COMPLETING MILESTONES THAT REQUIRE OBSERVATION AND ALLOW SUITABLE TIME TO MAKE ANY REQUIRED CORRECTIONS TO THE WORK PRIOR TO ENGAGING IN THE NEXT PHASE OF THE PROJECT.

CONCRETE: FOUNDATION AND WALLS AND MEMBERS
PRIOR TO PLACING CONCRETE IT IS REQUIRED THAT ELEMENT STRUCTURAL ENGINEERS, INC. OBSERVE THE FOLLOWING:
FOUNDATIONS
CONCRETE SHEAR WALL REINFORCING
P.T. SLAB REINFORCING AND TENDON LAYOUT
STEEL: FRAMING
PRIOR TO WOOD FRAMING BEING INSTALLED IT IS REQUIRED THAT ELEMENT STRUCTURAL ENGINEERS, INC. OBSERVE THE FOLLOWING:
STEEL ELEMENTS AND CONNECTIONS
STEEL MOMENT FRAME
WOOD: ROOF
PRIOR TO ROOF FINISHES BEING INSTALLED IT IS REQUIRED THAT ELEMENT STRUCTURAL ENGINEERS, INC. OBSERVE THE FOLLOWING:
ROOF HORIZONTAL STRAPS
ROOF DIAPHRAGM EDGE NAILING
WOOD: SHEAR WALLS AND DIAPHRAGM
PRIOR TO WALL AND FLOOR FINISHES BEING INSTALLED IT IS REQUIRED THAT ELEMENT STRUCTURAL ENGINEERS, INC. OBSERVE THE FOLLOWING:
SHEAR WALL NAILING
SHEAR WALL FRAMING HARDWARE
SHEAR WALL HOLD-DOWNS
VERTICAL STRAPS
FLOOR HORIZONTAL STRAPS

PYATOK
1611 TELEGRAPH AVE.
SUITE 200
OAKLAND, CA 94612
T. 510.465.7010 | F. 510.465.8575
www.pyatok.com

element structural engineers, inc.
39675 Cedar Blvd., Suite 295C
Newark, California 94560
Tel: 510.573.1557
eFax: 973.924.0663
www.elementse.com

Owner

2700 INTERNATIONAL
OAKLAND, CA 94601

STAMP: REGISTERED PROFESSIONAL ENGINEER THUY N. FONTELERA S5536 STRUCTURAL STATE OF CALIFORNIA

SIGNED DATE: 12/09/2022

ISSUE SCHEDULE

NO.	ISSUE	DATE
	100% SD	5/11/2022
	50% DD	7/15/2022
	100% DD	9/16/2022
	50% CD	11/18/2022
	PERMIT SET	12/09/2022

REVISION SCHEDULE

NO.	ISSUE	DATE

JOB NUMBER: ESE# 3395
DRAWN BY: YL/BDT
CHECKED BY: JTE
ISSUE DATE: 12/09/2022
SCALE: 12" = 1'-0"
TITLE: **STRUCTURAL TITLE SHEET**

SHEET:
S1.00

PRELIMINARY - Not for Construction -

© 2019 PYATOK ARCHITECTURE & URBAN DESIGN

12/7/2022 5:03:20 PM

GENERAL STRUCTURAL NOTES

SPECIAL INSPECTIONS

SPECIAL INSPECTIONS AND TESTING WILL BE PERFORMED IN ACCORDANCE WITH THE APPROVED PLANS AND SPECIFICATIONS, THE ATTACHED "STATEMENT OF SPECIAL INSPECTION" AND CBC SECTIONS 1704, 1705, 1707 AND 1708

REQUIRED INSPECTIONS (SEE ATTACHED SCHEDULE)	
SECTION 1705.2	STEEL
SECTION 1705.3	CONCRETE
SECTION 1705.4	LEVEL 1 MASONRY
SECTION 1705.4	LEVEL 2 MASONRY
SECTION 1705.5	WOOD
TABLE 1705.6	SOIL
SECTION 1705.14	SPRAYER FIRE-RESISTANT MATERIALS
SIMPSON TITEN-HD (ESR-2713)	PERIODIC INSPECTION
SIMPSON SET-XP EPOXY (ESR-2508)	PERIODIC INSPECTION BY E.O.R. PER CITY APPROVAL
HILTI EXPANSION BOLT (ESR-1917)	PERIODIC INSPECTION
SIMPSON EXPANSION BOLT (ESR-3037)	PERIODIC INSPECTION

WHERE FABRICATATION OF STRUCTURAL LOAD BEARING MEMBERS AND ASSEMBLIES IS BEING PERFORMED ON THE PREMISES OF A FABRICATOR'S SHOP THAT IS EXEMPT TO SPECIAL INSPECTION PER CBC SECTION 1704.2.5, THE FABRICATOR SHALL SUBMIT DOCUMENTATION THAT THEY MEET THE REQUIREMENTS OF THIS SECTION TO THE STRUCTURAL ENGINEER OF RECORD AND THE GOVERNING JURISDICTION PRIOR TO THE START OF FABRICATION EACH CONTRACTOR RESPONSIBLE FOR THE CONSTRUCTION OF A SEISMIC FORCE RESISTING SYSTEM, DESIGNATED SEISMIC SYSTEM OR A SEISMIC RESISTING COMPONENT LISTED IN THE STATEMENT OF SPECIAL INSPECTIONS SHALL SUBMIT A WRITTEN STATEMENT OF RESPONSIBILITY TO THE BUILDING OFFICIAL AND THE OWNER PRIOR TO THE COMMENCEMENT OF THE WORK ON THE SYSTEM OR COMPONENT. THE CONTRACTOR'S STATEMENT OF RESPONSIBILITY SHALL CONTAIN THE FOLLOWING:

1. ACKNOWLEDGEMENT OF AWARENESS OF THE SPECIAL REQUIREMENTS CONTAINED IN THE STATEMENT OF SPECIAL INSPECTIONS.
2. ACKNOWLEDGEMENT THAT CONTROL WILL BE EXERCISED TO OBTAIN CONFORMANCE WITH THE CONSTRUCTION DOCUMENTS APPROVED BY THE BUILDING OFFICIAL.
3. PROCEDURES FOR EXERCISING CONTROL WITHIN THE CONTRACTOR'S ORGANIZATION, THE METHOD AND FREQUENCY OF REPORTING AND THE DISTRIBUTION OF THE REPORTS.
4. IDENTIFICATION AND QUALIFICATION OF THE PERSON(S) EXERCISING SUCH CONTROL AND THEIR POSITION(S) IN THE ORGANIZATION.

DEFERRED SUBMITTALS

DEFERRED SUBMITTALS SHALL FIRST BE SUBMITTED TO THE PROJECT ARCHITECT AND/OR ENGINEER FOR REVIEW AND COORDINATION. A SUBMITTAL TO THE CITY OF OAKLAND SHALL BE MADE FOR ITS APPROVAL. THIS SUBMITTAL SHALL INCLUDE A LETTER STATING THAT THE PROJECT ARCHITECT/ ENGINEER REVIEW AND COORDINATION HAS BEEN COMPLETED AND THAT THE PLANS AND CALCULATIONS FOR THE DEFERRED ITEMS COMPLY WITH THE CALIFORNIA BUILDING CODE.

SUBMITTAL	CERTIFICATE	SHOP DRAWINGS	CALCS W/ ENG. STAMP
STEEL STAIRS		●	●
ELEVATOR		●	
SIMPSON ATS SYSTEM		●	●
GUARDRAIL SYSTEM*		●	

*GUARDRAILS SHALL RESIST A LOAD OF 50 POUNDS PER LINEAL FOOT IN ANY DIRECTION AND SHALL RESIST A SINGLE CONCENTRATED LOAD OF 200 POUNDS APPLIED IN ANY DIRECTION AT ANY POINT. SUBMIT CALCS TO THE CITY FOR APPROVAL.

CONTRACTOR SUBMITTALS

THE FOLLOWING IS A LISTING OF REQUIRED ITEMS TO BE SUBMITTED TO THE STRUCTURAL ENGINEER OF RECORD AND/OR ARCHITECT FOR REVIEW AND COORDINATION PRIOR TO FABRICATION AND INSTALLATION. (TO BE PROVIDED IF MARKED):

SUBMITTAL	CERTIFICATE	SHOP DRAWINGS	CALCS W/ ENG. STAMP
CONCRETE REINF. STEEL	●	●	
CONCRETE MIX DESIGN		●	
UNBONDED P/T CONCRETE			
PLANS, ELEVATIONS, SECTIONS		●	
TENDON LAYOUT AND SUPPORT REINF.	●	●	
STRESSING REPORTS	●		
ELONGATION REPORTS	●		
STRUCTURAL STEEL	●	●	
COLD FORMED METAL FRAMING	●	●	
PRE-FABRICATED WOOD I-JOISTS		●	●

ABBREVIATIONS

&	AND	J.H.	JOIST HANGER
@	AT		
A.B.	ANCHOR BOLT	K.D.D.F.	KILN DRIED DOUGLAS FIR
A.O.R.	ARCHITECT OF RECORD	LONG.	LONGITUDINAL
ARCH.	ARCHITECTURAL	L.V.F.	LOW-VELOCITY FASTENER
B.F.E.	BASE FLOOD ELEVATION	MAX.	MAXIMUM
BLDG.	BUILDING	M.B.	MACHINE BOLTS (UNFINISHED)
BLK'G.	BLOCKING	MIN.	MINIMUM
BM.	BEAM		
B.N.	BOUNDARY NAIL	(N)	NEW
B.O.C.	BOTTOM OF CONCRETE	N/A	NOT APPLICABLE
BOT.	BOTTOM	N.S.	NEAR SIDE
BTW.	BETWEEN	NTS.	NOT TO SCALE
℄	CENTER LINE	O/	OVER
C.B.	CEILING BEAM	O.C.	ON CENTER
C.G.S.	CENTER OF GRAVITY OF POST-TENSIONING STRAND	OPP.	OPPOSITE
		P.	PLATE
C.J.	CONTROL JOINT	P.A.D.	POWER ACTUATED DEVICE
CLR.	CLEAR COVER	PLY.	PLYWOOD
COL.	COLUMN	P.T.	PRESSURE TREATED
CONC.	CONCRETE	P/T	POST TENSIONING
CONT.	CONTINUOUS	R.C.J.	ROUGHENED CONSTRUCTION JOINT
DBL.	DOUBLE		
DBO.	DRAWING BY OTHER	REINF.	REINFORCEMENT
DET.	DETAIL	REQ'D.	REQUIRED
D.C.	DEMAND CRITICAL	RTU	ROOF TOP UNIT
D.F.	DOUGLAS FIR		
DWG.	DRAWING	S.A.D.	SEE ARCHITECTURAL DRAWINGS
		S.C.D.	SEE CIVIL DRAWINGS
(E)	EXISTING	SCHED.	SCHEDULE
EA.	EACH	S.D.B.O.	SEE DRAWINGS BY OTHERS
EL.	ELEVATION	SIM.	SIMILAR
E.N.	EDGE NAIL	S.J.	SEISMIC JOINT
E.O.R.	ENGINEER OF RECORD	S.L.R.S.	SEISMIC LOAD RESISTING SYSYEM
E.Q.	EQUAL		
E.S.	EDGE SCREW	S.L.D.	SEE LANDSCAPE DRAWINGS
E.W.	EACH WAY	S.M.D.	SEE MECHANICAL DRAWINGS
EXT.	EXTERIOR	SPEC.	SPECIFICATION
		SQ.	SQUARE
FDN.	FOUNDATION	SYM.	SYMMETRICAL
FIN.	FINISH		
FL.	FLOOR	T&B	TOP AND BOTTOM
F.O.C.	FACE OF CONCRETE	T&G	TONGUE AND GROOVE
F.O.S.	FACE OF STUD	T.D.	TIE DOWN
F.S.	FAR SIDE	T.O.C.	TOP OF CONCRETE
FTG.	FOOTING	T.O.F.	TOP OF FINISH
G.C.	GENERAL CONTRACTOR	T.O.S.	TOP OF STEEL FRAMING
G.C.T.	GIRDER COLLECTOR	T.P.	TOP OF PLATE
	TRUSS	TRAN.	TRANSVERSE
G.E.C.T.	GABLE END COLLECTOR TRUSS	TYP.	TYPICAL
G.E.T.	GABLE END TRUSS	U.O.N.	UNLESS OTHERWISE NOTED
G.T.	GIRDER TRUSS	VERT.	VERTICAL
GEOTECH.	GEOTECHNICAL	V.I.F.	VERIFY IN FIELD
GLB.	GLULAM BEAM		
		W/	WITH
H.D.	HOLD DOWN	W/O	WITHOUT
HDR.	HEADER	WF	WIDE FLANGE
HORIZ.	HORIZONTAL	WPSL	WOLMANIZED PSL
HSS	HOLLOW STEEL SECTION		

NAILING SCHEDULE (CBC TABLE 2304.10.1)

DESCRIPTION OF ELEMENTS	NUMBER AND TYPE OF FASTENER	SPACING AND LOCATION
ROOF		
1. Blocking between ceiling joists, rafters or trusses to top plate or other framing below	3-8d common (2 1/2"x0.131"); or 3-10d box (3"x0.128")	Each end, toenail
Blocking between rafters or truss not at the wall top plate, to rafter or truss	2-8d common (2 1/2"x0.131")	Each end, toenail
	2-16d common (3 1/2"x0.162")	End nail
Flat blocking to truss and web filler	16d common (3 1/2"x0.162")	Face nail
2. Ceiling joist to top plate	3-8d common (2 1/2"x0.131"); or 3-10d box (3"x0.128")	Each joist, toenail
3. Ceiling joist not attached to parallel rafter, laps over partitions (no thrust) (see Section 2308.7.3.1, Table 2308.7.3.1)	3-16d common (3 1/2"x0.162"); or 4-10d box (3"x0.128")	Face nail
5. Collar tie to rafter	3-10d common (3"x0.148"); or 4-10d box (3"x0.128")	Face nail
6. Rafter or roof truss to top plate (See Section 2308.7.5., Table 2308.7.5)	3-10d common (3"x0.148"); or 3-16d box (3 1/2"x0.135"); or 4-10d box (3"x0.128"	Toenail[1]
7. Roof rafters to ridge valley or hip rafters; or roof rafter to 2-inch ridge beam	2-16d common (3 1/2"x0.162"); or 3-10d box (3"x0.128")	End nail
	3-10d common (3"x0.148"); or 3-16d box (3 1/2"x0.135"); or 4-10d box (3"x0.128")	Toenail
WALL		
8. Stud to stud (not at braced wall panels)	16d common (3 1/2"x0.162");	24" o.c. face nail
	10d box (3"x0.128")	16" o.c. face nail
9. Stud to stud and abutting studs at intersecting wall corners (at braced wall panels)	16d common (3 1/2"x0.162"); or	16" o.c. face nail
	16d box (3 1/2"x0.135"); or	12" o.c. face nail
11. Continuous header to stud	4-8d common (2 1/2"x0.131"); or 4-10d box (3"x0.128")	Toenail
12. Top plate to top plate	16d common (3 1/2"x0.162"); or	16" o.c. face nail
	10d box (3"x0.128")	12" o.c. face nail
13. Top plate to top plate, at end joints	8-16d common (3 1/2"x0.162"); or 12-10d box (3"x0.128")	Each side of end joint, face nail (min. 24" lap splice length ea. side of end joint
14. Bottom plate to joist, rim joist, band joist or blocking (not at all braced wall panels)	16d common (3 1/2"x0.162"); or	16" o.c. face nail
	16d box (3 1/2"x0.135")	12" o.c. face nail
15. Bottom plate to joist, rim joist, band joist or blocking at braced wall panels	2-16d common (3 1/2"x0.162"); or 3-16d box (3 1/2"x0.135")	16" o.c. face nail
16. Stud to top or bottom plate	4-8d common (2 1/2"x0.131"); or 4-10d box (3"x0.128")	Toenail
	2-16d common (3 1/2"x0.162"); or 3-10d box (3"x0.128")	End nail
17. Top plates, laps at corners and intersections	2-16d common (3 1/2"x0.162"); or 3-10d box (3"x0.128")	Face nail
FLOOR		
21. Joist to sill, top plate, or girder	3-8d common (2 1/2"x0.131"); or 3-10d box (3"x0.128")	Toenail
22. Rim joist, band joist, or blocking to top plate, sill or other framing below	8d common (2 1/2"x0.131"); or 10d box (3"x0.128")	6" o.c., toenail
23. 1"x6" subfloor or less to each joist	2-8d common (2 1/2"x0.131"); or 2-10d box (3"x0.128")	Face nail
24. 2" subfloor to joist or girder	2-16d common (3 1/2"x0.162")	Face nail
25. 2" planks (plank & beam - floor & roof)	2-16d common (3 1/2"x0.162")	ea. bearing, face nail
	20d common (4"x0.192")	32" o.c., face nail at top and bottom staggered on opposite sides
26. Built-up girders and beams, 2" lumber layers	10d box (3"x0.128"); or 3"x0.131" nails; or 3" 14 gage staples, 7/16" crown	24" o.c., face nail at top and bottom staggered on opposite sides
	And: 20d common (4"x0.192") 10d box (3"x0.128")	Ends and at each splice, face nail
27. Ledger strip supporting joists or rafters	3-16d common (3 1/2"x0.162"); or 4-10d box (3"x0.128")	Each joist or rafter, face nail
28. Joist to band joist or rim joist	3-16d common (3 1/2"x0.162"); or 4-10d box (3"x0.128"	End nail
29. Joist to band joist or rim joist	2-8d common (2 1/2"x0.131"); or 2-10d box (3"x0.128")	Each end, toe nail

NOTES:

1. NAILING PER SCHEDULE ABOVE IS TO BE USED WHERE NAILING IS NOT SPECIFIED ON PLANS OR DETAILS. NAILING PER PLANS AND DETAILS SUPERCEDE NAILING SCHEDULE UNLESS APPROVED BY ENGINEER.
2. NAIL SPECIFIED ARE COMMMON: 8d= 2 1/2"x0.131" 10d= 3"x0.148" 16d= 3 1/2"x0.162" 20d= 4"x0.192"
3. FOR ALTERNATE NAILING AND INFORMATION NOT SHOWN, SEE COMPLETE TABLE CBC 2304.10.1

HANGER SCHEDULE

MEMBER	SIMPSON DESIGNATION FACE MOUNT	TOP FLANGE
2x4	U24	HU24TF
2x6	U26	JB26
3x8	U36	W38
2x8	LU28	JB28
2x10	U210	JB210A
2x12	U210	JB212A
4x6	HU46 MAX.	W46
4x8	HU48 MAX.	B48
4x10	HU410 MAX.	B410
4x12	HU412 MAX.	HU412TF
6x6	U66	WNP66
6x8	HU68	WNP68
6x10	U610	B610
6x12	HU612	HU612TF
9 1/2" TJI	IUS	ITS
11 7/8" TJI	IUS	ITS
14" TJI	IUS	ITS
16" & 20" TJI	MIU	MIT
LVL 1 3/4x9 1/2	HU9 MAX	ITS1.81/9.5
LVL 1 3/4x11 7/8	HU11 MAX	MIT11.88
LVL 1 3/4x14	U14	LBV1.81/14
PSL 3 1/2	HGUS	GLTV
PSL 5 1/4	HGUS	GLTV
PSL 7	HGUS	HGLTV
GLB 3 1/8	HGUS	LEG3
GLB 5 1/8	HGUS	EG5
GLB 6 3/4	HGUS	EG7
GLB 8 3/4	HHGU	EG9

NOTES:

1. INSTALL PER MANUFACTURER'S INSTRUCTIONS. FILL ALL HOLES WITH FASTENERS SPECIFIED.
2. USE SKEWED AND/OR SLOPED HANGERS AS REQD.
3. HANGERS ARE TYP. U.O.N. IN DRAWINGS.
4. SCHEDULE ABOVE BASED ON SIMPSON STRONG TIE WOOD CONSTRUCTION CONNECTORS C-C-2019

STUD WALL SCHEDULE

WALL TYPE	STUD WALL SCHEDULE LEVEL	5TH & 6TH FLOOR	3RD & 4TH FLOOR	2ND FLOOR
	MAX. HEIGHT	9'-3"	9'-3"	10'-0"
EXTERIOR WALL		2x6 AT 16" O.C.	2x6 AT 16" O.C.	2x6 AT 12" O.C.
INTERIOR SINGLE WALL		2x4 AT 16" O.C.	4x4 AT 16" O.C.	4x4 AT 12" O.C.
INTERIOR PARTY WALL		2x4 AT 16" O.C.	3x4 AT 16" O.C.	3x4 AT 12" O.C.
CORRIDOR STAGGERED WALL		2x4 AT 16" O.C.	4x4 AT 16" O.C.	4x4 AT 12" O.C.
INTERIOR NON-BEARING SINGLE WALL		2x4 AT 16" O.C.	2x4 AT 16" O.C.	2x4 AT 12" O.C.
STUD GRADE		DF NO. 2	DF NO. 2	DF NO. 2

BALLOON FRAMED STUD WALL SCHEDULE		
HEIGHT	EXTERIOR	INTERIOR
9'	2x6 AT 16" O.C.	2x4 AT 16" O.C.
10'	2x6 AT 16" O.C.	2x4 AT 16" O.C.
11'	2x6 AT 16" O.C.	2x4 AT 16" O.C.
12'	2x6 AT 16" O.C.	2x4 AT 12" O.C.
13'	2x6 AT 16" O.C.	2x4 AT 12" O.C.
14'	2x6, DF NO.1 AT 16" O.C.	2x4, DF NO.1, AT 8" O.C. OR 2x6, DF NO.1, AT 16" O.C.
15'	2x6, DF NO.1 AT 16" O.C.	2x4, DF NO.1, AT 8" O.C. OR 2x6, DF NO.1, AT 16" O.C.

SYMBOLS

- SPREAD FOOTING SEE SCHEDULE, SEE DETAIL XXX
- STRESSING AND OF POST-TENSIONING TENDON. SEE DETAIL XXXX AND XXXX
- DEAD END ANCHOR OF POST-TENSIONING. SEE DETAIL XXXX AND XXXX
- VERTICAL LOCATION C.G.S. OF POST-TENSIONING TENDON ABOVE SLAB OR BEAM SOFFIT.
- SLAB TOP REINFORCING BARS SEE DET. XXX
- SLAB BOTTOM REINFORCING BARS
- SLAB TOP AND BOTTOM REINFORCING BARS
- TOP REINF. OVER COL. AND WALLS: X= NUMBER OF REINF. BARS Y= REINF. SIZE Z= LENGTH OF REINF.
- #5 TOPx6'-0" AT 1'-0" O.C. TYP. U.O.N., SEE DET. XXX
- BANDED TENDONS
- X DISTRIBUTE TENDONS AT Y' O.C.
- TENDONS AT NEUTRAL AXIS OF SLAB W/ NO DRAPE
- CHANGE IN BOTTOM OF SOFFIT SLOPE
- CONCRETE CURB OR HIGH STEM
- STEP IN FOOTING, SEE DETAIL 10/S5.1
- CMU WALL, SEE DETAIL XXX
- STRUCTURAL STEEL COLUMN, SEE SHEET S7.1
- SEISMIC MOMENT CONNECTION, SEE DETAIL XXX

SYMBOLS

- DETAIL NUMBER / SHEET NUMBER
- DROP IN FLOOR ELEVATION
- SLOPED FINISH SEE ARCHITECTURAL DRAWING
- DEPRESSED FLOOR
- BUILT-UP FLOOR AT FLOOR FRAMING PLAN AND CALIFORNIA FRAMING AT ROOF FRAMING PLAN
- UNDER FLOOR VENT, 8"x16" MIN.
- HOLD DOWN, SEE DETAIL 10/SS.3 FOR HDU AT FOUNDATION AND SEE DETAIL 9/S8.3 FOR HOLD DOWN AT FLOOR
- HOLD DOWN IN EPOXY AT EXISTING CONCRETE SEE DETAIL 10/SS.3
- CONTINUOUS ROD/ SYSTEM TIE-DOWN, SEE SHEET S-.-- AND S-.--
- CONTINUOUS WOOD MEMBER IN SECTION
- WOOD BLOCKING MEMBER IN SECTION
- POST ABOVE FRAMING
- POST BELOW FRAMING
- POST ABOVE AND BELOW FRAMING
- WALLS ABOVE FOR ANCHOR BOLT REQUIREMENTS SEE DETAIL 9/S8.02
- WALLS BELOW FLOOR/ ROOF FRAMING SEE DETAIL 1/S8.01
- SHEAR WALL ABOVE SEE SHEARWALL SCHEDULE ON DETAIL 4/S8.2. "#" DENOTES EDGE NAILING. IN ADDITION TO THE SPECIFIC LOCATIONS SHOWN ON THE PLANS, ALL THE EXTERIOR WALLS SHALL BE SHEATHED WITH PLYWOOD INCLUDING ABOVE AND BELOW ALL WALL OPENINGS, AND INCLUDING GABLE WALLS. NAIL PER MARK " 6 " ON SCHEDULE. X'-X" = MIN. CALCULATED SHEAR WALL LENGTH, S.A.D. FOR ACTUAL WALL DIMENSIONS.
- SHEAR WALL ABOVE AND BELOW "#" DENOTES EDGE NAILING FOR SHEAR WALL ABOVE. X'-X" = MIN. CALCULATED SHEAR WALL LENGTH, S.A.D. FOR ACTUAL WALL DIMENSIONS.
- STRAPPED SHEAR WALL ABOVE SEE DETAIL 4/S8.02 AND 5/S8.02 FOR NAILING SCHEDULE AND OTHER REQUIREMENTS. X'-X" = MIN. CALCULATED SHEAR WALL LENGTH, LEFT TO RIGHT, S.A.D. FOR ACTUAL WALL DIMENSIONS
- SHEAR WALL BELOW SEE FLOOR PLAN BELOW FOR NAILING INFORMATION
- FRAMING MEMBER / DIAGRAMMATIC EXTENT OF FRAMING
- DBL — DOUBLE JOISTS OR RAFTER
- HANGER SEE SCHEDULE ON THIS SHEET
- HDR — HEADER BELOW FRAMING USE TYP. HEADER PER SCHED. 10/S8.01, U.O.N. ON PLAN
- BEARING WALL / INDICATES JOIST SPLICE / BEAM/GIRDER
- CEILING BEAM OR DROPPED BEAM BELOW FRAMING
- CEILING JOIST FRAMING DIRECTION S.A.D., SEE 13/S8.01 FOR SCHEDULE
- X — VERTICAL TIE DOWN STRAP
- CMSTXX (X,Y) — X=LENGTH TO LEFT Y=LENGTH TO RIGHT BOTH IN FEET; HORIZONTAL COLLECTOR STRAP, SEE DETAIL 13/S8.02. CENTER OF STRAP
  NOTE: FOR CLARITY STRAP ARE SHOWN OFFSET FROM WALL, SEE SPECIFIED DETAILS FOR ACTUAL STRAP LOCATION.
- ROOF BRACE PER PLAN AND DETAIL XXX
- CONCRETE WALL ABOVE
- LOAD BEARING CONCRETE WALLS BELOW W/ NO SHEAR TRASFER
- CX — INDICATES CONCRETE COLUMN, SEE PLANS AND DET. 15/S5.01
- X'-X" / # — X'-X" MIN. CALCULATED SHEAR WALL LENGTH, S.A.D FOR ACTUAL WALL DIMENSIONS. "W#" DENOTES CONCRETE WALL TYPE PER SCHED. ON DET. 1/S5.02
- INDICATES CONCRETE SHEARWALL BELOW, SEE PLANS AND DET. 1/S5.03
- C.J. — CONTROL JOINT, SEE DET. XXX AND XXX
- NEW CONTINUOUS FOUNDATION UNDER STRUCTURAL WALL

PYATOK
1611 TELEGRAPH AVE.
SUITE 200
OAKLAND, CA 94612
T. 510.465.7010 | F. 510.465.8575
www.pyatok.com

element structural engineers, inc.
39675 Cedar Blvd., Suite 295C
Newark, California 94560
Tel: 510.573.1557
eFax: 973.924.0663
www.elementse.com

Owner

2700 INTERNATIONAL
OAKLAND, CA 94601

STAMP: REGISTERED PROFESSIONAL ENGINEER TIMOTHY N. FONTELERA S 5536 STRUCTURAL
SIGNED DATE: 12/09/2022

ISSUE SCHEDULE

NO.	ISSUE	DATE
	100% SD	5/11/2022
	50% DD	7/15/2022
	100% DD	9/16/2022
	50% CD	11/18/2022
	PERMIT SET	12/09/2022

REVISION SCHEDULE

NO.	ISSUE	DATE

JOB NUMBER:	ESE# 3395
DRAWN BY:	YL/BDT
CHECKED BY:	JTE
ISSUE DATE:	12/09/2022
SCALE:	12" = 1'-0"

TITLE: **GENERAL STRUCTURAL NOTES**

SHEET: **S1.01**

PRELIMINARY - Not for Construction -

© 2019 PYATOK ARCHITECTURE & URBAN DESIGN

12/7/2022 5:03:22 PM

STATEMENT OF SPECIAL INSPECTIONS, 2019 CBC

This "STATEMENT OF SPECIAL INSPECTIONS" is submitted in fulfillment of the requirements of CBC Sections 1704 and 1705. This form is structured after and used by permission from the Structural Engineer Association of Northern California's (SEAONC) model statement of Special Inspections.

☐ The Schedule of Special Inspections summarizes the Special Inspections and tests required. Special Inspectors will refer to the approved plans and specifications for detailed special inspection requirements. Any additional tests and inspections required by the approved plans and specifications shall also be performed.

Special Inspections and Testing will be performed in accordance with the approved plans and specifications, this statement and CBC Sections 1704, 1705, 1706, 1707, and 1708. Interim reports will be submitted to the Building Official and the Registered Design Professional in Responsible Charge in accordance with CBC Section 1704A.2.4.

A Final Report of Special Inspections documenting required Special Inspections, testing and correction of any discrepancies noted in the inspections shall be submitted prior to issuance of a Certificate of Use and Occupancy (Section 1704.2.4). The Final Report will document:

- Required special inspections.
- Correction of discrepancies noted in inspections.

The Owner recognizes his or her obligation to ensure that the construction complies with the approved permit documents and to implement this program of special inspections. In partial fulfillment of these obligations, the Owner will retain and directly pay for the Special Inspections as required in CBC Section 1705.

This plan has been developed with the understanding that the Building Official will:

- Review and approve the qualifications of the Special Inspectors who will perform the inspections.
- Monitor special inspection activities on the job site to assure that the Special Inspectors are qualified and are performing their duties as called for in this Statement of Special Inspection.
- Review submitted inspection reports.
- Perform inspections as required by the local building code.

CONTRACTORS RESPONSIBILITIES (Section 1704.4): Each contractor responsible for the construction of a main wind – or seismic-force-resisting system, designated seismic system or a wind –or seismic-resisting component listed in the statement of special inspections acknowledges:

1) Awareness of the special requirements contained in the statement of special inspections;
2) Control will be exercised to obtain conformance with the construction documents approved by the Chief Building Official;
3) Procedures for exercising control within the contractor's organization, the method and frequency of reporting and the distribution of the reports.

SEISMIC REQUIREMENTS (Section 1705.12)

Description of seismic-force-resisting system and designated seismic systems subject to special inspections as per Section 1705.12:

Wood Shearwalls, Special Steel Moment Frames, and Special Concrete Shearwalls

The extent of the seismic-force-resisting system is defined in more detail in the construction documents.

WIND REQUIREMENTS (Section 1705.11)

Description of main wind-force-resisting system and designated wind resisting components subject to special inspections in accordance with Section 1705.11:

Wood Shearwalls, Special Steel Moment Frames, and Special Concrete Shearwalls

The extent of the main wind-force-resisting system and wind resisting components is defined in more detail in the construction documents.

SCHEDULE OF SPECIAL INSPECTION

Notation Used in Table:

Column headers:
C — Indicates continuous inspection is required.
P — Indicates periodic inspections are required. The notes and/or contract documents should clarify.

Box entries:
X — Is placed in the appropriate column to denote either "C" continuous or "P" periodic inspections.
— — Denotes an activity that is either a one-time activity or one whose frequency is defined in some other manner.

Additional detail regarding inspections and tests are provided in the project specifications or notes on the drawings.

VERIFICATION AND INSPECTION	C	P	REFERENCED STANDARD	CBC REFERENCE
INSPECTION OF FABRICATORS				
1. ☒ Inspect fabricator's fabrication and quality control procedures.	—	—	—	1704.2.5

INSPECTION OF STEEL				
1. Material verification of high-strength bolts, nuts and washers:				
☒ Identification marking to conform to ASTM stds specified in the approved construction documents.	—	X	AISC 360, Section A3.3 and applicable ASTM material standards	—
☒ Inspect fabricator's fabrication and quality control procedures.	—	X	—	—
2. Inspection of high-strength bolting:				
☒ Snug-tight joints.	—	X	AISC 360, Section M2.5	—
☐ Pretensioned and slip-critical joints using turn-of-nut with matchmarking, twist-off bolt or direct tension indicator methods of installation.	—	X		
☐ Pretensioned and slip-critical joints using turn-of-nut without matchmarking or calibrated wrench methods of installation.	X	—		
3. Material verification of structural steel and cold-formed steel deck:				
☒ For structural steel, identification markings to conform to AISC 360.	—	X	AISC 360, Section A3.1	2202.1
☒ For other steel, identification markings to conform to ASTM standards specified in the approved construction documents.	—	X	Applicable ASTM material standards	—
☒ Manufacturer's certified test reports.	—	X	—	—

VERIFICATION AND INSPECTION	C	P	REFERENCED STANDARD	CBC REFERENCE
4. Material verification of weld filler materials:				
☒ Identification marking to conform to AWS specification in the approved construction documents.	—	X	AISC 360, Section A3.5 and applicable AWS A5 documents	—
☒ Manufacturer's certificate of compliance required.	—	X	—	—
5. Inspection of welding:				
a. Structural steel and cold-formed steel deck:				
☒ Complete and partial joint penetration groove welds.	X	—	AWS D1.1 AWS D1.3	1705.2.1
☐ Multipass fillet welds.	X	—		
☐ Single-pass fillet welds > 5/16"	X	—		
☐ Plug and slot welds.	X	—		
☒ Single-pass fillet welds <= 5/16"	—	X		
☐ Floor and roof deck welds.	—	X	AWS D1.3	
b. Reinforcing steel:				
☐ Verification of weldability of reinforcing steel other than ASTM A 706.	—	X	AWS D1.4 ACI 318: Sections 26.6.4.1, 18.2.8, 25.5.7.4	—
☐ Reinforcing steel resisting flexural and axial forces in intermediate and special moment frames, and boundary elements of special structural walls of concrete and shear reinforcement.	X	—		
☐ Shear reinforcement.	X	—		
☐ Other reinforcing steel.	—	X		
6. Inspection of steel frame joints details for compliance:				
☒ Details such as bracing and stiffening.	—	X	—	1705A2.1
☒ Member locations.	—	X		
☒ Application of joint details at each connection.	—	X		

VERIFICATION AND INSPECTION	C	P	REFERENCED STANDARD	CBC REFERENCE
INSPECTION OF WELDING				
1. ☒ Welded studs when used for structural diaphragms.	—	X	—	1705.2.5
2. ☐ Welding of cold-formed steel framing members.	—	X		
3. ☒ Welding of stairs and railing systems.	—	X		

VERIFICATION AND INSPECTION	C	P	REFERENCED STANDARD	CBC REFERENCE
INSPECTION OF CONCRETE				
1. ☒ Inspection of reinforcing steel, including prestressing tendons and placement.	—	X	ACI 318: Ch. 20, 25.2, 25.3, 26.6.1-26.6.3	1705.3
2. ☒ Inspection of reinforcing steel welding in accordance with Table 1705.3 Item 2.	—	—	AWS D1.4 ACI 318: 26.5.4	—
3. ☒ Inspection of bolts to be installed in concrete prior to and during placement of concrete where allowable loads have been increased or where strength design is used.	X	—	ACI 318: 17.8.2	—
4. ☒ Inspection of anchors installed in hardened concrete.	—	X	ACI 318: 17.8.2.4, 17.8.2	—
5. ☒ Verifying use of required design mix.	—	X	ACI 318: Ch. 19, 26.4.3, 26.4.4	1904.1, 1904.2, 1908.2, 1908.3
6. ☒ At time fresh concrete is sampled to fabricate specimens for strength tests, perform slump and air content tests and determine the temperature of the concrete.	X	—	ASTM C 172 ASTM C 31 ACI 318: 26.4.5, 26.12	1908.10.1
7. ☒ Inspection of concrete and shotcrete placement for proper application techniques.	X	—	ACI 318: 26.4.5	1908.6, 1908.7, 1908.8
8. ☒ Inspection for maintenance of specified curing temperature and techniques.	—	X	ACI 318: 26.4.7-26.4.9	1908.9
9. Inspection of prestressed concrete:				
☒ Application of prestressing forces.	X	—	ACI 318: 26.9.2.1	—
☐ Grouting of bonded prestressing tendons in the seismic force-resisting system.	X	—	ACI 318: 26.9.2.3	
10. ☐ Erection of precast concrete members.	—	X	ACI 318: Ch. 26.8	—
11. ☒ Verification of in-situ concrete strength, prior to stressing of tendons in posttensioned concrete and prior to removal of shores and forms from beams and structural slabs.	—	X	ACI 318: 26.10.2	—
12. ☒ Inspect formwork for shape, location, and dimensions of the concrete member being formed.	—	X	ACI 318: 6.6.1	—
13. ☐ Bolts Installed in Existing Masonry or Concrete				
☐ Direct tension testing of existing anchors.	—	X	See ICC ES Reports form special inspection requirements for proprietary products	
☐ Direct tension testing of new bolts.	—	X		
☐ Torque testing of new bolts.	—	X		
☐ Prequalification test for bolts and other types of anchors.	—	X		
14. ☐ Other:				

VERIFICATION AND INSPECTION	C	P	REFERENCED STANDARD	CBC REFERENCE
INSPECTION OF WOOD				
1. ☐ Inspect prefabricated wood structural elements and assemblies in accordance with Section 1704.2.5.	—	—		1705.5
2. ☐ Inspect site built assemblies.	—	—		
3. Inspect high-load diaphragms:				
☐ Verify grade and thickness of sheathing.	—	—		1705a.5.3
☐ Verify nominal size of framing members at adjoining panel edges.	—	—		
☐ Verify nail or staple diameter and length.	—	—		
☐ Verify number of fastener lines.	—	—		
☐ Verify spacing between fasteners in each line and at edge margins.	—	—		
4. ☐ Metal-plate-connected wood trusses spanning 60 feet or greater: Verify temporary installation restraint/bracing and the permanent individual truss member bracing are installed in accordance with the approved truss submittal package.	—	X		1705a.5.2
REQUIRED VERIFICATION AND INSPECTION OF SOIL				
1. ☒ Verify materials below footings are adequate to achieve the desired bearing capacity.	—	X		Table 1705a.6
2. ☒ Verify excavations are extended to proper depth and have reached proper material.	—	X		
3. ☒ Perform classification and testing of compacted fill materials.	—	X		
4. ☒ Verify use of proper materials, densities and lift thicknesses during placement and compaction of compacted fill.	X	—		
5. ☒ Prior to placement of compacted fill, observe subgrade and verify that site has been prepared properly.	—	X		
REQUIRED VERIFICATION AND INSPECTION OF DEEP DRIVEN FOUNDATION ELEMENTS				
1. ☐ Verify element materials, sizes and lengths comply with the requirements.	X	—		Table 1705a.7
2. ☐ Determine capacities of test elements and conduct additional load tests, as required.	X	—		
3. ☐ Observe driving operations and maintain complete and accurate records for each element.	X	—		
4. ☐ Verify locations of piles and their plumbness, confirm type and size of hammer, record number of blows per foot of penetration, determine required penetrations to achieve design capacity, record tip and butt elevations and document any damage to foundation element.	X	—		
5. ☐ For steel elements, perform additional inspections in accordance with Section 1705.2	—	—		
6. ☐ For concrete elements and concrete filled elements, perform additional inspections in accordance with Section 1705.3	—	—		

VERIFICATION AND INSPECTION	C	P	REFERENCED STANDARD	CBC REFERENCE
SPECIAL INSPECTION FOR WIND REQUIREMENTS				
1. Structural Wood				
☐ Inspect field gluing operations of elements of the main wind force-resisting system.	X	—		1705.11
☐ Inspect nailing, bolting, anchoring, and other fastening of components within the main windforce-resisting system, including wood shear walls, wood diaphragms, drag struts, braces and hold-downs.	—	X		
2. Cold-Formed Steel Framing				
☐ Welding of elements of the main wind-force-resisting system.	—	X		1705.11.2
☐ Inspection of screw attachments, bolting, anchoring, and other fastening of components within the main wind-force-resisting system including shear walls, braces, diaphragms, collectors (drag struts) and hold- downs.	—	X		
3. Wind-resisting components				
☐ Roof cladding.	—	X		1705.11.3
☐ Wall cladding.	—	X		
SPECIAL INSPECTIONS FOR SEISMIC RESISTANCE				
1. ☐ Special inspection for welding in accordance with the quality assurance plan requirements of AISC 341.	X	—		1705.12
2. Structural Wood				
☐ Inspect field gluing operations of elements of the seismic-force-resisting system.	X	—		1705.12.2
☒ Inspect nailing, bolting, anchoring, and other fastening of components within the seismic-force-resisting system, including wood shear walls, wood diaphragms, drag struts, braces, shear panels and hold-downs.	—	X		
3. Cold-Formed steel light-frame construction				
☐ Welding of elements of the seismic-force-resisting system.	—	X		1705.12.3
☐ Inspection of screw attachments, bolting, anchoring, and other fastening of components within the seismic- force-resisting system including shear walls, braces, diaphragms, collectors (drag struts) and hold-downs.	—	X		
5. Architectural components				
☐ Inspect erection and fastening of exterior cladding, interior and exterior nonbearing walls and interior and exterior veneer greater than 30 feet in high above grade or walking surface.	—	X		1705.12.5
☐ Inspect erection and fastening of exterior cladding and interior and exterior veneer weighing greater than 5 psf.	—	X		
☐ Inspect erection and fastening of all interior nonbearing walls weighing greater than 15 psf.	—	X		

VERIFICATION AND INSPECTION	C	P	REFERENCED STANDARD	CBC REFERENCE
☐ Inspection of anchorage for success floors.	—	X		1705.12.5.1
6. Mechanical and Electrical Components				
☐ Inspect anchorage of electrical equipment for emergency or stand-by power systems.	—	X		1705.12.6
☐ Inspect anchorage of non-emergency electrical equipment.	—	X		
☐ Inspect installation of piping systems and associated mechanical units carrying flammable, combustible, or highly toxic contents.	—	X		
☐ Inspect installation of HVAC ductwork that contains hazardous materials.	—	X		
☐ Inspect installation of vibration isolation systems where required by Section 1705.12.6	—	X		
7. ☐ Inspection of storage rack anchorage that are 8 feet or greater in height.	—	X		1705.12.7
8. ☐ Seismic isolation system: Inspection of isolation during fabrication and installation of isolator units and energy dissipation devices.	—	X		1705.12.8
9. ☐ Inspection for installation of cold-formed steel special bolted moment frames.	—	X		1705.12.9

PYATOK
1611 TELEGRAPH AVE.
SUITE 200
OAKLAND, CA 94612
T. 510.465.7010 | F. 510.465.8575
www.pyatok.com

element structural engineers, inc.
39675 Cedar Blvd., Suite 295C
Newark, California 94560
Tel: 510.573.1557
eFax: 973.924.0663
www.elementse.com

Owner

2700 INTERNATIONAL
OAKLAND, CA 94601

STAMP:
REGISTERED PROFESSIONAL ENGINEER TROY N. FONTELERA S 5536 STRUCTURAL STATE OF CALIFORNIA
SIGNED DATE: 12/09/2022

ISSUE SCHEDULE

NO.	ISSUE	DATE
	100% SD	5/11/2022
	50% DD	7/15/2022
	100% DD	9/16/2022
	50% CD	11/18/2022
	PERMIT SET	12/09/2022

REVISION SCHEDULE

NO.	ISSUE	DATE

JOB NUMBER:	ESE# 3395
DRAWN BY:	YL/BDT
CHECKED BY:	JTE
ISSUE DATE:	12/09/2022
SCALE:	
TITLE:	**SPECIAL INSPECTION NOTES**

SHEET:
S1.02

PRELIMINARY - Not for Construction -

© 2019 PYATOK ARCHITECTURE & URBAN DESIGN

12/7/2022 5:03:23 PM

FOUNDATION NOTES

1. SEE GENERAL NOTES AND SYMBOLS ON SHEET S1.00 AND S1.01.
2. SEE ARCHITECTURAL PLANS FOR ACTUAL FINISH FLOOR AND PAD ELEVATIONS. FOR TOP OF SLAB ELEVATIONS SEE A2.21.
3. EXCAVATION SHALL BE MADE AS NEAR AS POSSIBLE TO THE LINES REQUIRED BY THE FOOTING. NO MATERIAL IS TO BE OVER EXCAVATED UNNECESSARILY. EXCAVATION SHALL BE MADE IN COMPLIANCE WITH CAL/OSHA REGULATIONS.
4. VERIFY LOCATION OF UNDERGROUND UTILITIES BEFORE EXCAVATION. NOTIFY ARCHITECT PRIOR TO EXCAVATION IN THE EVENT SUCH UTILITIES ARE ENCOUNTERED.
5. FOR DRAINAGE DETAILS, SUMPS, PITS, DAMPROOFING, TRENCHES, CURBS, EXTERIOR WALKS, UTILITIES EQUIPMENT DETAILS, STEPS, DIMENSIONS NOT SHOWN, ETC., SEE DRAWINGS OTHER THAN STRUCTURAL.
6. COORDINATE UNDERGROUND CONDUIT AND FOUNDATION PRIOR TO CONCRETE POUR.
7. SETBACK CONDITIONS SHALL BE VERIFIED IN THE FIELD PRIOR TO TRENCHING AND FORMING FOUNDATION. THE FOUNDATION SUBCONTRACTOR SHALL COORDINATE WITH THE GENERAL CONTRACTOR, SURVEYOR AND THE ARCHITECT.
8. CONTRACTOR TO DETERMINE REQUIRED HEIGHT OF CONCRETE CURB TO MAINTAIN REQUIRED 8" MIN. SEPARATION FROM FINISH GRADE TO WOOD AND 6" SEPARATION FROM FINISHED FLATWORK TO WOOD. PROVIDE CONCRETE CURB AS REQUIRED AND SHOWN IN DETAILS. STEP CURBS AS NEEDED, TYPICAL AT ALL PERIMETER WALLS.
9. SEE DETAIL 1,2,3,4, ON SHEET S5.01 FOR TYPICAL CONCRETE REINFORCING REQUIREMENTS.
10. SEE DETAIL 9/S5.01 FOR PIPE PENETRATIONS UNDER CONCRETE FOOTINGS.
11. ALL HOLD DOWN CONNECTIONS SHALL BE RE-TIGHTENED JUST PRIOR TO CLOSURE.
12. HOLD DOWN ANCHORS TO BE SET AND POSITIONED IN PLACE PRIOR TO CALLING FOR FOUNDATION INSPECTION.
13. THE FASTENERS EMBEDDED INTO CONCRETE SHALL BE ATTACHED TO OR HOOKED AROUND REINFORCING STEEL OR OTHERWISE TERMINATED TO EFFECTIVELY TRANSFER FORCES TO THE REINFORCING STEEL.
14. FASTENERS IN PRESERVATIVE-TREATED WOOD (ANCHOR BOLTS, NAILS, SCREWS, ETC. AT ALL EXTERIOR WALL CONSTRUCTION) SHALL BE APPROVED SILICON BRONZE OR COPPER, STAINLESS STEEL OR HOT-DIPPED ZINC-COATED STEEL. (CBC SECTION 2304.10.5.1)
15. PROJECT SOIL ENGINEER MUST REVIEW FINAL GRADING. DO NOT POUR FOUNDATION CONCRETE UNTIL OBTAINING SOIL ENGINEER'S WRITTEN APPROVAL. IN NO CIRCUMSTANCES SHALL CHANGES BE MADE TO THE BOTTOM OF FOOTING ELEVATIONS SHOWN EXCEPT AS DIRECTED BY THE ENGINEER.
16. ALL EARTHWORK AND SITE DRAINAGE, INCLUDNG BUILDING PAD PREPARATION, SPREAD FOOTING EXCAVATIONS, PREPARATION OF SUBGRADE BENEATH HARDSCAPE, PLACEMENT AND COMPACTION OF ENGINEERED FILL BENEATH HARDSCAPE, UTILITY TRENCH BACKFILL, AND INSTALLATION OF SURFACE DRAINAGE SHOULD BE PERFORMED IN ACCORDANCE WITH THE GEOTECHNICAL REPORT PREPARED BY ROCKRIDGE GEOTECHNICAL SERVICES DATED JUNE 17, 2022 SHOULD BE PROVIDED AT LEAST 48 HOURS ADVANCE NOTIFICATION OF ANY EARTHWORK OPERATIONS AND SHOULD BE PRESENT TO OBSERVE AND TEST, AS NECESSARY, THE EARTHWORK AND FOUNDATION INSTALLATION PHASES OF THE PROJECT.

1 FOUNDATION PLAN

1/8" = 1'-0"

PYATOK
1611 TELEGRAPH AVE.
SUITE 200
OAKLAND, CA 94612
T. 510.465.7010 | F. 510.465.8575
www.pyatok.com

element structural engineers, inc.
39675 Cedar Blvd., Suite 295C
Newark, California 94560
Tel: 510.573.1557
eFax: 973.924.0663
www.elementse.com

Owner

2700 INTERNATIONAL
OAKLAND, CA 94601

STAMP: REGISTERED PROFESSIONAL ENGINEER THUY N. FONTELERA S 5536 STRUCTURAL

SIGNED DATE: 12/09/2022

ISSUE SCHEDULE

NO.	ISSUE	DATE
	100% SD	5/11/2022
	50% DD	7/15/2022
	100% DD	9/16/2022
	50% CD	11/18/2022
	PERMIT SET	12/09/2022

REVISION SCHEDULE

NO.	ISSUE	DATE

JOB NUMBER: ESE# 3395
DRAWN BY: YL/BDT
CHECKED BY: JTE
ISSUE DATE: 12/09/2022
SCALE: 1/8" = 1'-0"
TITLE: **FOUNDATION PLAN**

SHEET: **S2.01**

PRELIMINARY - Not for Construction -

© 2019 PYATOK ARCHITECTURE & URBAN DESIGN

12/7/2022 5:03:28 PM

POST-TENSION PODIUM NOTES

1. SEE GENERAL NOTES AND SYMBOLS ON SHEET S1.00 AND S1.01.
2. SEE DRAWINGS OTHER THAN STRUCTURAL FOR FLOOR DEPRESSIONS, MECHANICAL, SEE DRAWINGS OTHER THAN STRUCTURAL FOR FLOOR DEPRESSIONS, MECHANICAL,
3. VERIFY ALL DIMENSIONS, ELEVATIONS, FINISH SURFACES, SLOPES, DRAINS, SLAB DEPRESSIONS, ETC., WITH ARCHITECTURAL DRAWINGS, PRIOR TO START OF CONSTRUCTION.
4. FOR LOCATION, SIZE, AND EXTENT OF CURBS, S.A.D.
5. VERIFY ELEVATOR OPENING WITH ELEVATOR MANUFACTUER PRIOR TO CONSTRUCTION.
6. FOR TYPICAL POST-TENSION PODIUM SECTIONS AND DETAILS SEE S5.04 THROUGH S5.09.
7. FOR EXTERIOR CONCRETE WALL ELEVATIONS SEE S3.01 AND S3.02.

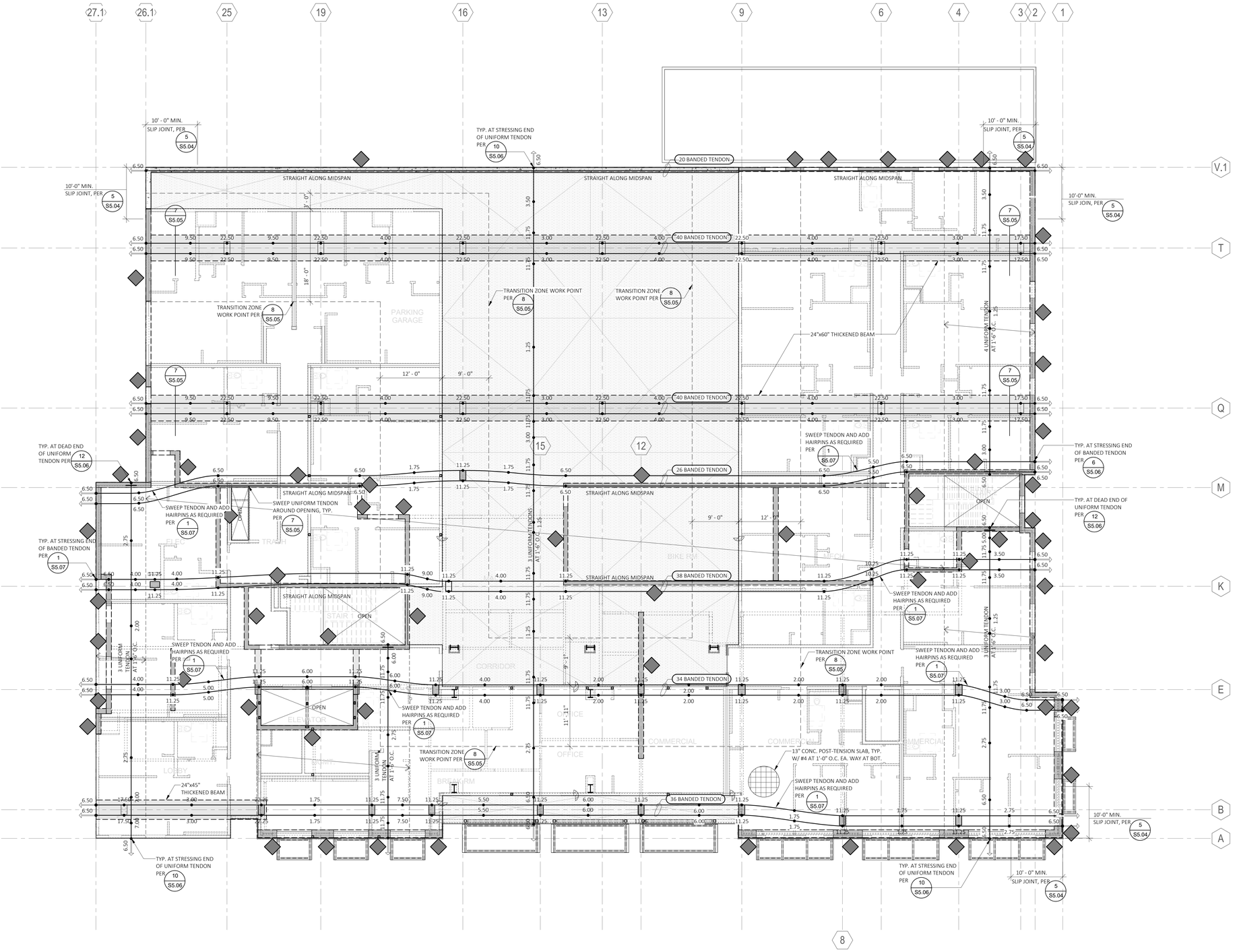

1 LEVEL 2/PODIUM POST-TENSION PLAN

1/8" = 1'-0"

PYATOK
1611 TELEGRAPH AVE.
SUITE 200
OAKLAND, CA 94612
T. 510.465.7010 | F. 510.465.8575
www.pyatok.com

element structural engineers, inc.
39675 Cedar Blvd., Suite 295C
Newark, California 94560
Tel: 510.573.1557
eFax: 973.924.0663
www.elementse.com

Owner

2700 INTERNATIONAL
OAKLAND, CA 94601

STAMP:

REGISTERED PROFESSIONAL ENGINEER THUY N. FONTELERA S 5536 STRUCTURAL STATE OF CALIFORNIA

SIGNED DATE: 12/09/2022

ISSUE SCHEDULE

NO.	ISSUE	DATE
	100% SD	5/11/2022
	50% DD	7/15/2022
	100% DD	9/16/2022
	50% CD	11/18/2022
	PERMIT SET	12/09/2022

REVISION SCHEDULE

NO.	ISSUE	DATE

JOB NUMBER:	ESE# 3395
DRAWN BY:	YL/BDT
CHECKED BY:	JTE
ISSUE DATE:	12/09/2022
SCALE:	1/8" = 1'-0"

TITLE:

LEVEL 2 POST-TENSION PLAN

SHEET:

S2.02A

PRELIMINARY - Not for Construction -

© 2019 PYATOK ARCHITECTURE & URBAN DESIGN

12/7/2022 5:03:35 PM

POST-TENSION PODIUM NOTES

1. SEE GENERAL NOTES AND SYMBOLS ON SHEET S1.00 AND S1.01.
2. SEE DRAWINGS OTHER THAN STRUCTURAL FOR FLOOR DEPRESSIONS, MECHANICAL, SEE DRAWINGS OTHER THAN STRUCTURAL FOR FLOOR DEPRESSIONS, MECHANICAL,
3. VERIFY ALL DIMENSIONS, ELEVATIONS, FINISH SURFACES, SLOPES, DRAINS, SLAB DEPRESSIONS, ETC., WITH ARCHITECTURAL DRAWINGS, PRIOR TO START OF CONSTRUCTION.
4. FOR LOCATION, SIZE, AND EXTENT OF CURBS, S.A.D.
5. VERIFY ELEVATOR OPENING WITH ELEVATOR MANUFACTUER PRIOR TO CONSTRUCTION.
6. FOR TYPICAL POST-TENSION PODIUM SECTIONS AND DETAILS SEE S5.04 THROUGH S5.09.
7. FOR EXTERIOR CONCRETE WALL ELEVATIONS SEE S3.01 AND S3.02.

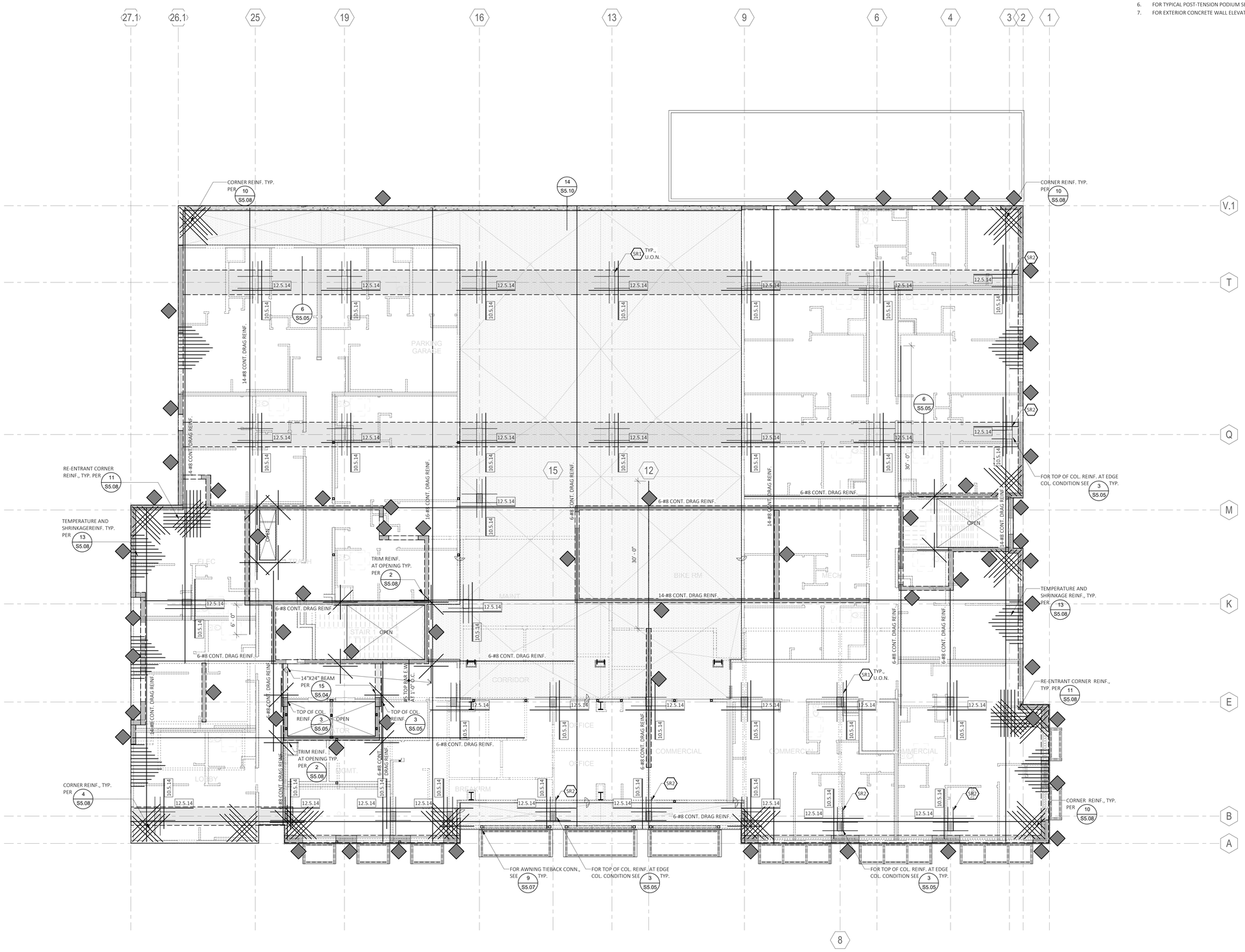

1 LEVEL 2/PODIUM REINFORCEMENT PLAN

1/8" = 1'-0"

PYATOK
1611 TELEGRAPH AVE.
SUITE 200
OAKLAND, CA 94612
T. 510.465.7010 | F. 510.465.8575
www.pyatok.com

element structural engineers, inc.
39675 Cedar Blvd., Suite 295C
Newark, California 94560
Tel: 510.573.1557
eFax: 973.924.0663
www.elementse.com

Owner

2700 INTERNATIONAL

OAKLAND, CA 94601

STAMP:

REGISTERED PROFESSIONAL ENGINEER — THUY N. FONTELERA — S 5536 — STRUCTURAL — STATE OF CALIFORNIA

SIGNED DATE: 12/09/2022

ISSUE SCHEDULE

NO.	ISSUE	DATE
	100% SD	5/11/2022
	50% DD	7/15/2022
	100% DD	9/16/2022
	50% CD	11/18/2022
	PERMIT SET	12/09/2022

REVISION SCHEDULE

NO.	ISSUE	DATE

JOB NUMBER:	ESE# 3395
DRAWN BY:	YL/BDT
CHECKED BY:	JTE
ISSUE DATE:	12/09/2022
SCALE:	1/8" = 1'-0"

TITLE:

LEVEL 2 REINFORCEMENT PLAN

SHEET:

S2.02B

PRELIMINARY - Not for Construction -

© 2019 PYATOK ARCHITECTURE & URBAN DESIGN

12/7/2022 5:03:40 PM

HARDY CFS PICTURE FRAME SCHEDULE				
MARK	SIZE	LOCATED ON	INSTALLATION AT BOTTOM	INSTALLATION AT TOP
H1	HFXPIC 2112 8x10 W/ COL. POST	S2.02C	PER PLAN	PER PLAN
H2	HFXPIC 1812 8x9 W/ COL. POST	S2.03, S2.04	PER PLAN	PER PLAN

FLOOR FRAMING NOTES

1. SEE GENERAL NOTES AND SYMBOLS ON SHEET S1.00 AND S1.01.
2. SEE DRAWINGS OTHER THAN STRUCTURAL FOR FLOOR DEPRESSIONS, MECHANICAL, ELECTRICAL AND SHAFT OPENINGS, ETC.
3. SEE DETAIL 12/S8.01 FOR ALLOWABLE HOLES AND NOTCHES AT FRAMING MEMBERS.
4. SAWN LUMBER BEAMS SPECIFIED MAY BE SUBSTITUTED WITH PREFABRICATED BEAMS (ie. LSL) AS A CONTRACTOR OPTION. THIS SUBSTITUTION SHALL BE SUBMITTED AND APPROVED BY THE ENGINEER OF RECORD.
5. ALL WOOD BEAMS SHOWN ON PLANS SHALL BE SUPPORTED ON WOOD POSTS PER SCHEDULE ON DETAIL 11/S8.01 UNLESS OTHERWISE NOTED.
6. SEE DETAIL 1/S8.01 FOR TYPICAL STUD WALL SIZE AND SPACING.
7. SEE DETAIL 3/S8.02 AND 6/S8.02 FOR FLOOR PLYWOOD NAILING.
8. ALL LUMBER EXPOSED TO WEATHER SHALL BE P.T. OR WOLMANIZED.
9. FOR INTERIOR NON-BEARING WALL OPENING SEE DETAIL 5/S8.01.
10. TYPICAL NON-STRUCTURAL WALL FRAMING SHALL BE 2x4 AT 1'-4" O.C. MINIMUM.
11. IN ADDITION TO THE SPECIFIC LOCATIONS SHOWN ON THE PLANS, ALL THE NEW EXTERIOR WALLS SHALL BE SHEATHED WITH PLYWOOD INCLUDING ABOVE AND BELOW ALL WALL OPENINGS, AND GABLE WALLS. NAIL PER MARK "6" PER SHEARWALL SCHEDULE ON DETAIL 4/S8.02.
12. PROVIDE BLOCKING OR DOUBLE JOIST FOR INTERIOR NON-BEARING WALL.
13. FOR STUD WALL SCHEDULE, SEE S1.01.
14. REFER TO DETAIL 3/S8.01 FOR REQUIRED TOP PLATE SPLICE INFORMATION.

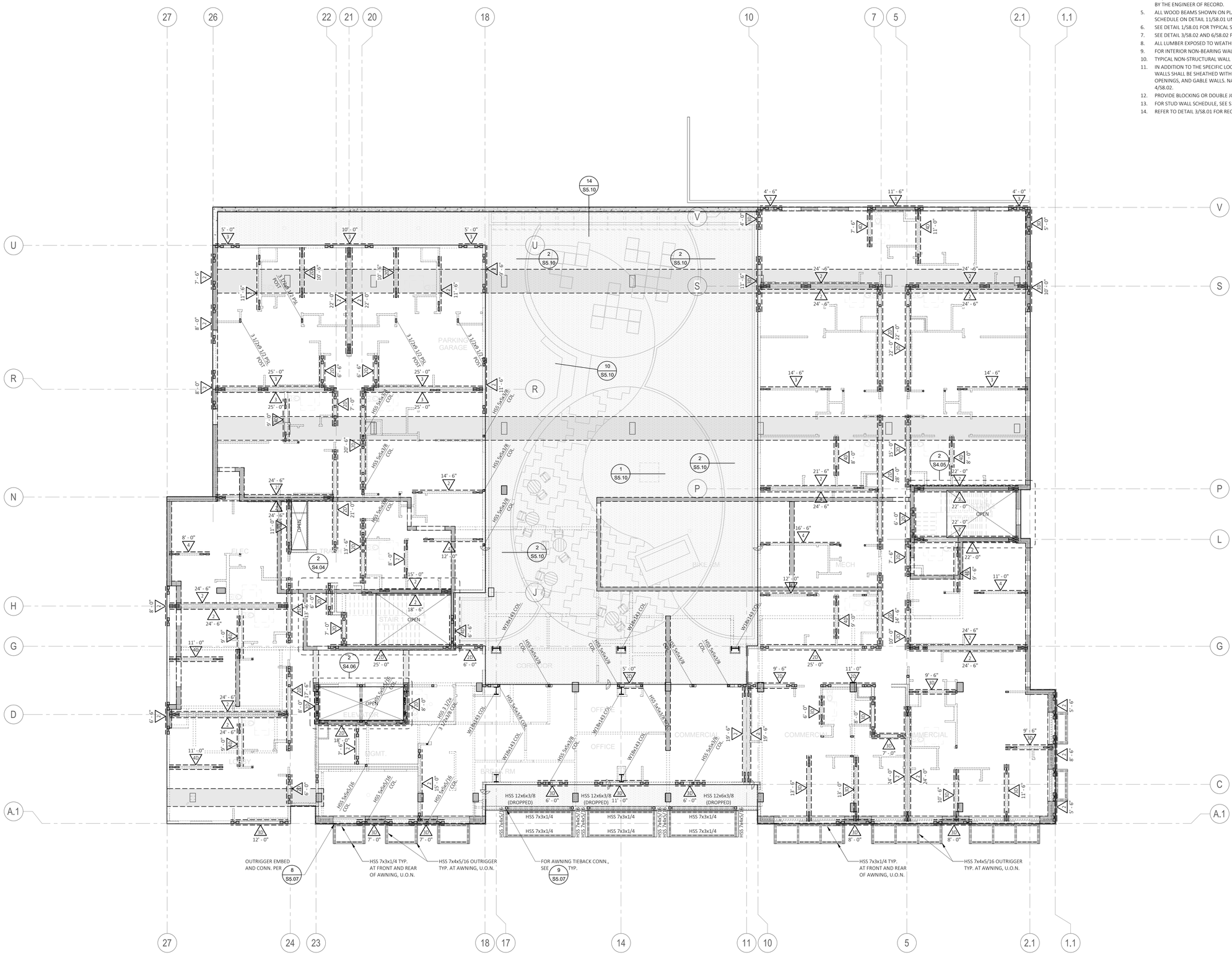

1 LEVEL 2/PODIUM EMBEDMENT PLAN

1/8" = 1'-0"

PYATOK
1611 TELEGRAPH AVE.
SUITE 200
OAKLAND, CA 94612
T. 510.465.7010 | F. 510.465.8575
www.pyatok.com

element structural engineers, inc.
39675 Cedar Blvd., Suite 295C
Newark, California 94560
Tel: 510.573.1557
eFax: 973.924.0663
www.elementse.com

Owner

2700 INTERNATIONAL

OAKLAND, CA 94601

STAMP:

REGISTERED PROFESSIONAL ENGINEER — THUC N. FONTELERA — S 5536 — STRUCTURAL — STATE OF CALIFORNIA

SIGNED DATE: 12/09/2022

ISSUE SCHEDULE

NO.	ISSUE	DATE
	100% SD	5/11/2022
	50% DD	7/15/2022
	100% DD	9/16/2022
	50% CD	11/18/2022
	PERMIT SET	12/09/2022

REVISION SCHEDULE

NO.	ISSUE	DATE

JOB NUMBER:	ESE# 3395
DRAWN BY:	YL/BDT
CHECKED BY:	JTE
ISSUE DATE:	12/09/2022
SCALE:	As indicated

TITLE: **LEVEL 2 EMBEDMENT PLAN**

SHEET: **S2.02C**

PRELIMINARY - Not for Construction -

© 2019 PYATOK ARCHITECTURE & URBAN DESIGN

12/7/2022 5:03:45 PM

NOTE:
THIS PLAN INDICATES BEARING WALL LOCATIONS ONLY.
SEE OTHER SHEETS FOR DETAIL CUTS AND STRUCTURAL SIZES.

HATCH TO LEFT NOTES BEARING WALL LOCATIONS, PROVIDE A.B. PER DETAIL 4/S8.02, AT NON SHEAR WALL USE TYPE 6 SPACING. SEE SHEET S2.02C FOR SHEARWALL MARK AND DETAIL CUTS.

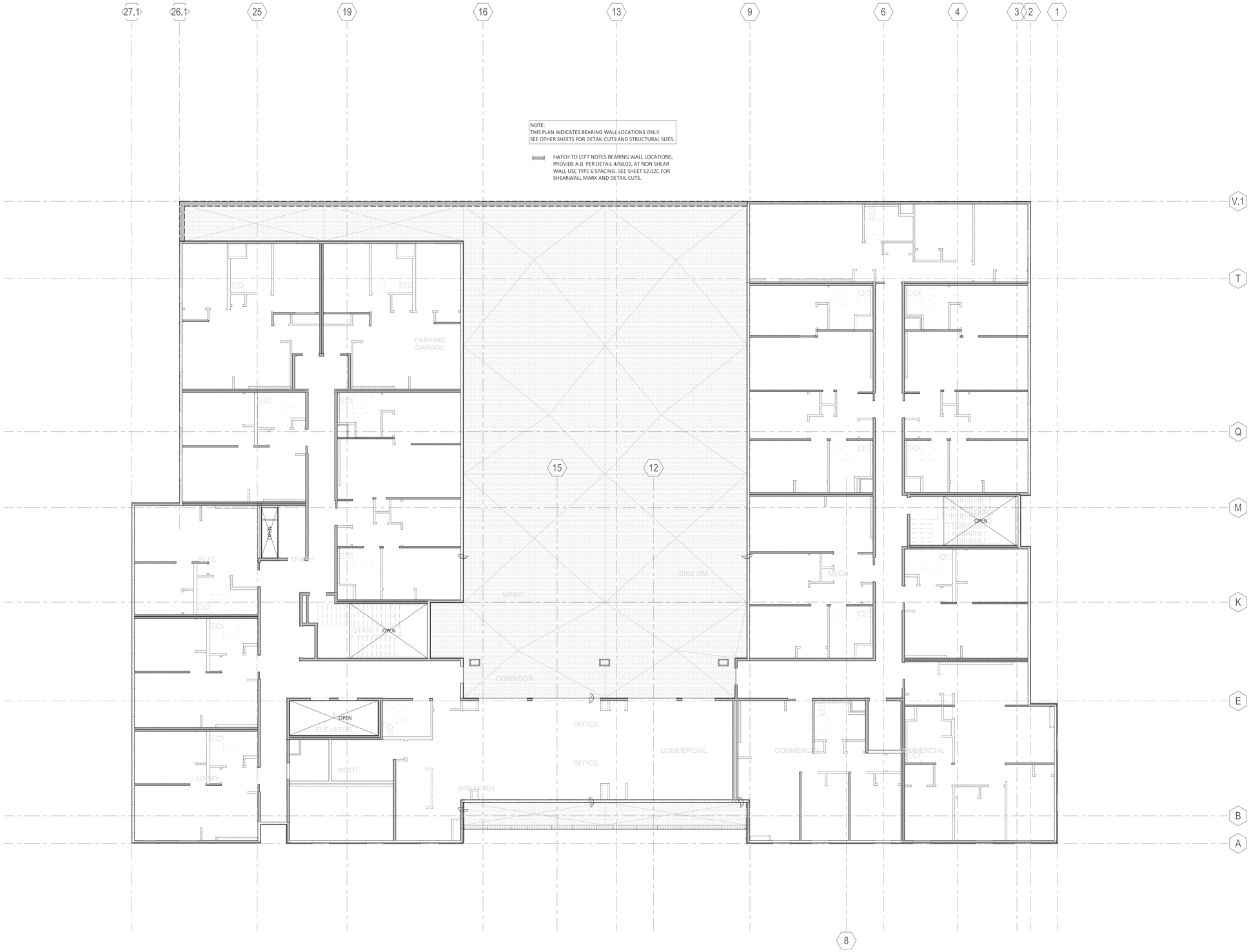

1 LEVEL 2 BEARING WALL PLAN

1/8" = 1'-0"

PYATOK
1611 TELEGRAPH AVE.
SUITE 200
OAKLAND, CA 94612
T. 510.465.7010 | F. 510.465.8575
www.pyatok.com

element
structural engineers, inc.
39675 Cedar Blvd., Suite 295C
Newark, California 94560
Tel: 510.573.1557
eFax: 973.924.0663
www.elementse.com

Owner

2700 INTERNATIONAL

OAKLAND, CA 94601

STAMP:

REGISTERED PROFESSIONAL ENGINEER
TROY N. FONTELERA
S 5536
STRUCTURAL
STATE OF CALIFORNIA

SIGNED DATE: 12/09/2022

ISSUE SCHEDULE

NO.	ISSUE	DATE
	100% SD	5/11/2022
	50% DD	7/15/2022
	100% DD	9/16/2022
	50% CD	11/18/2022
	PERMIT SET	12/09/2022

REVISION SCHEDULE

NO.	ISSUE	DATE

JOB NUMBER:	ESE# 3395
DRAWN BY:	YL/BDT
CHECKED BY:	JTE
ISSUE DATE:	12/09/2022
SCALE:	1/8" = 1'-0"

TITLE:
LEVEL 2 BEARING WALL PLAN

SHEET:
S2.02D

PRELIMINARY - Not for Construction -

© 2019 PYATOK ARCHITECTURE & URBAN DESIGN

12/7/2022 5:03:48 PM

HARDY CFS PICTURE FRAME SCHEDULE				
MARK	SIZE	LOCATED ON	INSTALLATION AT BOTTOM	INSTALLATION AT TOP
H1	HFXPIC 2112 8x10 W/ COL. POST	S2.02C	PER PLAN	PER PLAN
H2	HFXPIC 1812 8x9 W/ COL. POST	S2.03, S2.04	PER PLAN	PER PLAN

FLOOR FRAMING NOTES

1. SEE GENERAL NOTES AND SYMBOLS ON SHEET S1.00 AND S1.01.
2. SEE DRAWINGS OTHER THAN STRUCTURAL FOR FLOOR DEPRESSIONS, MECHANICAL, ELECTRICAL AND SHAFT OPENINGS, ETC.
3. SEE DETAIL 12/S8.01 FOR ALLOWABLE HOLES AND NOTCHES AT FRAMING MEMBERS.
4. SAWN LUMBER BEAMS SPECIFIED MAY BE SUBSTITUTED WITH PREFABRICATED BEAMS (ie. LSL) AS A CONTRACTOR OPTION. THIS SUBSTITUTION SHALL BE SUBMITTED AND APPROVED BY THE ENGINEER OF RECORD.
5. ALL WOOD BEAMS SHOWN ON PLANS SHALL BE SUPPORTED ON WOOD POSTS PER SCHEDULE ON DETAIL 11/S8.01 UNLESS OTHERWISE NOTED.
6. SEE DETAIL 1/S8.01 FOR TYPICAL STUD WALL SIZE AND SPACING.
7. SEE DETAIL 3/S8.02 AND 6/S8.02 FOR FLOOR PLYWOOD NAILING.
8. ALL LUMBER EXPOSED TO WEATHER SHALL BE P.T. OR WOLMANIZED.
9. FOR INTERIOR NON-BEARING WALL OPENING SEE DETAIL 5/S8.01.
10. TYPICAL NON-STRUCTURAL WALL FRAMING SHALL BE 2x4 AT 1'-4" O.C. MINIMUM.
11. IN ADDITION TO THE SPECIFIC LOCATIONS SHOWN ON THE PLANS, ALL THE NEW EXTERIOR WALLS SHALL BE SHEATHED WITH PLYWOOD INCLUDING ABOVE AND BELOW ALL WALL OPENINGS, AND GABLE WALLS. NAIL PER MARK "6" PER SHEARWALL SCHEDULE ON DETAIL 4/S8.02.
12. PROVIDE BLOCKING OR DOUBLE JOIST FOR INTERIOR NON-BEARING WALL.
13. FOR STUD WALL SCHEDULE, SEE S1.01.
14. REFER TO DETAIL 3/S8.01 FOR REQUIRED TOP PLATE SPLICE INFORMATION.

UNIT PLAN SCHEDULE		
Unit	Sheet	Plan Number
UNIT A1	S4.01	1
UNIT A2	S4.01	2
UNIT A2.1	S4.01	3
UNIT A3	S4.01	4
UNIT B1	S4.02	1
UNIT B2	S4.02	2
UNIT B3	S4.02	3
UNIT B4	S4.02	4
UNIT B5	S4.02	1
UNIT C1	S4.03	2
UNIT C2	S4.03	3

SEE UNIT FRAMING AT SHEET S4.01, S4.02, AND S4.03, TYP.

1 LEVEL 3 FLOOR FRAMING PLAN

1/8" = 1'-0"

PYATOK
1611 TELEGRAPH AVE.
SUITE 200
OAKLAND, CA 94612
T. 510.465.7010 | F. 510.465.8575
www.pyatok.com

element structural engineers, inc.
39675 Cedar Blvd., Suite 295C
Newark, California 94560
Tel: 510.573.1557
eFax: 973.924.0663
www.elementse.com

Owner

2700 INTERNATIONAL
OAKLAND, CA 94601

STAMP: REGISTERED PROFESSIONAL ENGINEER THUY N. FONTENEAU S 5536 STRUCTURAL
SIGNED DATE: 12/09/2022

ISSUE SCHEDULE		
NO.	ISSUE	DATE
	100% SD	5/11/2022
	50% DD	7/15/2022
	100% DD	9/16/2022
	50% CD	11/18/2022
	PERMIT SET	12/09/2022

REVISION SCHEDULE		
NO.	ISSUE	DATE

JOB NUMBER:	ESE# 3395
DRAWN BY:	YL/BDT
CHECKED BY:	JTE
ISSUE DATE:	12/09/2022
SCALE:	As indicated

TITLE:
LEVEL 3 FLOOR FRAMING PLAN

SHEET:
S2.03

PRELIMINARY - Not for Construction -

© 2019 PYATOK ARCHITECTURE & URBAN DESIGN

12/7/2022 5:03:53 PM

HARDY CFS PICTURE FRAME SCHEDULE				
MARK	SIZE	LOCATED ON	INSTALLATION AT BOTTOM	INSTALLATION AT TOP
H1	HFXPIC 2112 8x10 W/ COL. POST	S2.02C	PER PLAN	PER PLAN
H2	HFXPIC 1812 8x9 W/ COL. POST	S2.03, S2.04	PER PLAN	PER PLAN

FLOOR FRAMING NOTES

1. SEE GENERAL NOTES AND SYMBOLS ON SHEET S1.00 AND S1.01.
2. SEE DRAWINGS OTHER THAN STRUCTURAL FOR FLOOR DEPRESSIONS, MECHANICAL, ELECTRICAL AND SHAFT OPENINGS, ETC.
3. SEE DETAIL 12/S8.01 FOR ALLOWABLE HOLES AND NOTCHES AT FRAMING MEMBERS.
4. SAWN LUMBER BEAMS SPECIFIED MAY BE SUBSTITUTED WITH PREFABRICATED BEAMS (ie. LSL) AS A CONTRACTOR OPTION. THIS SUBSTITUTION SHALL BE SUBMITTED AND APPROVED BY THE ENGINEER OF RECORD.
5. ALL WOOD BEAMS SHOWN ON PLANS SHALL BE SUPPORTED ON WOOD POSTS PER SCHEDULE ON DETAIL 11/S8.01 UNLESS OTHERWISE NOTED.
6. SEE DETAIL 1/S8.01 FOR TYPICAL STUD WALL SIZE AND SPACING.
7. SEE DETAIL 3/S8.02 AND 6/S8.02 FOR FLOOR PLYWOOD NAILING.
8. ALL LUMBER EXPOSED TO WEATHER SHALL BE P.T. OR WOLMANIZED.
9. FOR INTERIOR NON-BEARING WALL OPENING SEE DETAIL 5/S8.01.
10. TYPICAL NON-STRUCTURAL WALL FRAMING SHALL BE 2x4 AT 1'-4" O.C. MINIMUM.
11. IN ADDITION TO THE SPECIFIC LOCATIONS SHOWN ON THE PLANS, ALL THE NEW EXTERIOR WALLS SHALL BE SHEATHED WITH PLYWOOD INCLUDING ABOVE AND BELOW ALL WALL OPENINGS, AND GABLE WALLS. NAIL PER MARK "6" PER SHEARWALL SCHEDULE ON DETAIL 4/S8.02.
12. PROVIDE BLOCKING OR DOUBLE JOIST FOR INTERIOR NON-BEARING WALL.
13. FOR STUD WALL SCHEDULE, SEE S1.01.
14. REFER TO DETAIL 3/S8.01 FOR REQUIRED TOP PLATE SPLICE INFORMATION.

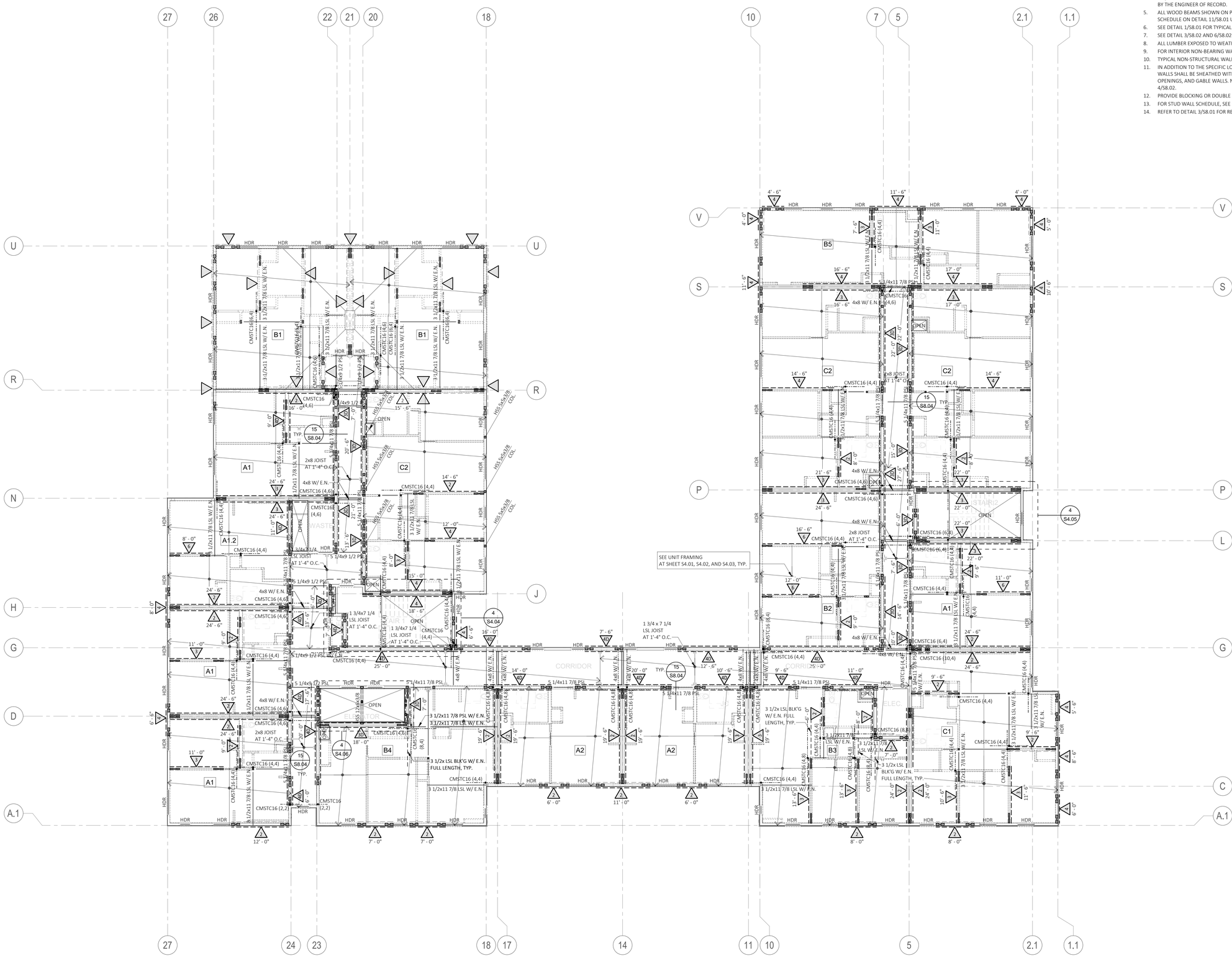

1 LEVEL 4 FLOOR FRAMING PLAN

1/8" = 1'-0"

UNIT PLAN SCHEDULE		
Unit	Sheet	Plan Number
UNIT A1	S4.01	1
UNIT A2	S4.01	2
UNIT A2.1	S4.01	3
UNIT A3	S4.01	4
UNIT B1	S4.02	1
UNIT B2	S4.02	2
UNIT B3	S4.02	3
UNIT B4	S4.02	4
UNIT B5	S4.02	1
UNIT C1	S4.03	2
UNIT C2	S4.03	3

PYATOK
1611 TELEGRAPH AVE.
SUITE 200
OAKLAND, CA 94612
T. 510.465.7010 | F. 510.465.8575
www.pyatok.com

element structural engineers, inc.
39675 Cedar Blvd., Suite 295C
Newark, California 94560
Tel: 510.573.1557
eFax: 973.924.0663
www.elementse.com

Owner

2700 INTERNATIONAL
OAKLAND, CA 94601

STAMP: REGISTERED PROFESSIONAL ENGINEER TROY N. FONTENEAU S 5536 STRUCTURAL
SIGNED DATE: 12/09/2022

ISSUE SCHEDULE

NO.	ISSUE	DATE
	100% SD	5/11/2022
	50% DD	7/15/2022
	100% DD	9/16/2022
	50% CD	11/18/2022
	PERMIT SET	12/09/2022

REVISION SCHEDULE

NO.	ISSUE	DATE

JOB NUMBER:	ESE# 3395
DRAWN BY:	YL/BDT
CHECKED BY:	JTE
ISSUE DATE:	12/09/2022
SCALE:	As indicated

TITLE:
LEVEL 4 FLOOR FRAMING PLAN

SHEET:
S2.04

PRELIMINARY - Not for Construction -

© 2019 PYATOK ARCHITECTURE & URBAN DESIGN

12/7/2022 5:03:58 PM

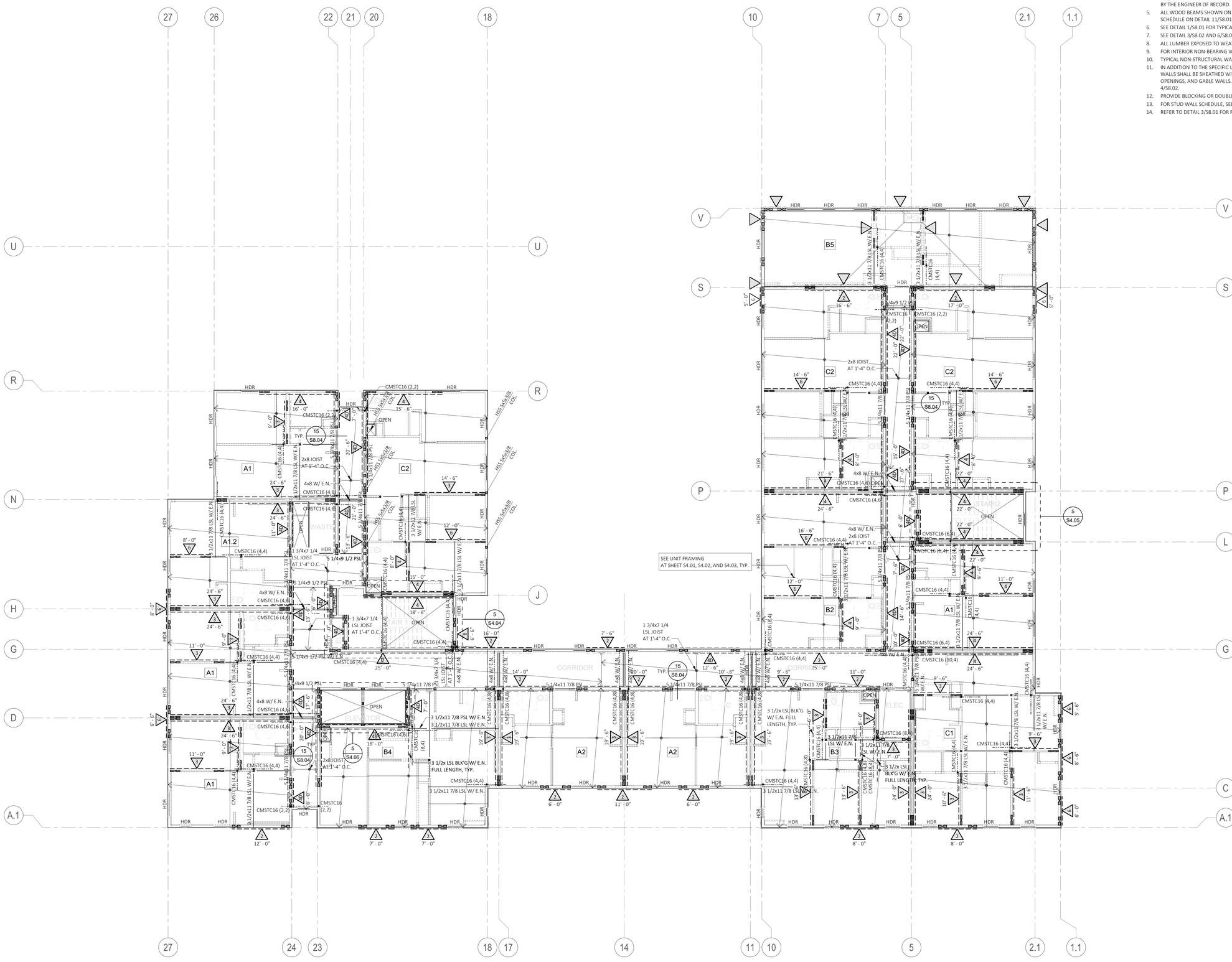

1 LEVEL 5 FLOOR FRAMING PLAN

1/8" = 1'-0"

FLOOR FRAMING NOTES

1. SEE GENERAL NOTES AND SYMBOLS ON SHEET S1.00 AND S1.01.
2. SEE DRAWINGS OTHER THAN STRUCTURAL FOR FLOOR DEPRESSIONS, MECHANICAL, ELECTRICAL AND SHAFT OPENINGS, ETC.
3. SEE DETAIL 12/S8.01 FOR ALLOWABLE HOLES AND NOTCHES AT FRAMING MEMBERS.
4. SAWN LUMBER BEAMS SPECIFIED MAY BE SUBSTITUTED WITH PREFABRICATED BEAMS (ie. LSL) AS A CONTRACTOR OPTION. THIS SUBSTITUTION SHALL BE SUBMITTED AND APPROVED BY THE ENGINEER OF RECORD.
5. ALL WOOD BEAMS SHOWN ON PLANS SHALL BE SUPPORTED ON WOOD POSTS PER SCHEDULE ON DETAIL 11/S8.01 UNLESS OTHERWISE NOTED.
6. SEE DETAIL 1/S8.01 FOR TYPICAL STUD WALL SIZE AND SPACING.
7. SEE DETAIL 3/S8.02 AND 6/S8.02 FOR FLOOR PLYWOOD NAILING.
8. ALL LUMBER EXPOSED TO WEATHER SHALL BE P.T. OR WOLMANIZED.
9. FOR INTERIOR NON-BEARING WALL OPENING SEE DETAIL 5/S8.01.
10. TYPICAL NON-STRUCTURAL WALL FRAMING SHALL BE 2x4 AT 1'-4" O.C. MINIMUM.
11. IN ADDITION TO THE SPECIFIC LOCATIONS SHOWN ON THE PLANS, ALL THE NEW EXTERIOR WALLS SHALL BE SHEATHED WITH PLYWOOD INCLUDING ABOVE AND BELOW ALL WALL OPENINGS, AND GABLE WALLS. NAIL PER MARK "6" PER SHEARWALL SCHEDULE ON DETAIL 4/S8.02.
12. PROVIDE BLOCKING OR DOUBLE JOIST FOR INTERIOR NON-BEARING WALL.
13. FOR STUD WALL SCHEDULE, SEE S1.01.
14. REFER TO DETAIL 3/S8.01 FOR REQUIRED TOP PLATE SPLICE INFORMATION.

UNIT PLAN SCHEDULE		
Unit	Sheet	Plan Number
UNIT A1	S4.01	1
UNIT A2	S4.01	2
UNIT A2.1	S4.01	3
UNIT A3	S4.01	4
UNIT B1	S4.02	1
UNIT B2	S4.02	2
UNIT B3	S4.02	3
UNIT B4	S4.02	4
UNIT B5	S4.02	1
UNIT C1	S4.03	2
UNIT C2	S4.03	3

PYATOK
1611 TELEGRAPH AVE.
SUITE 200
OAKLAND, CA 94612
T. 510.465.7010 | F. 510.465.8575
www.pyatok.com

element structural engineers, inc.
39675 Cedar Blvd., Suite 295C
Newark, California 94560
Tel: 510.573.1557
eFax: 973.924.0663
www.elementse.com

Owner

2700 INTERNATIONAL
OAKLAND, CA 94601

STAMP:
REGISTERED PROFESSIONAL ENGINEER TROY N. FONTENEAU S 5536 STRUCTURAL
SIGNED DATE: 12/09/2022

ISSUE SCHEDULE

NO.	ISSUE	DATE
	100% SD	5/11/2022
	50% DD	7/15/2022
	100% DD	9/16/2022
	50% CD	11/18/2022
	PERMIT SET	12/09/2022

REVISION SCHEDULE

NO.	ISSUE	DATE

JOB NUMBER:	ESE# 3395
DRAWN BY:	YL/BDT
CHECKED BY:	JTE
ISSUE DATE:	12/09/2022
SCALE:	1/8" = 1'-0"

TITLE:
LEVEL 5 FLOOR FRAMING PLAN

SHEET:
S2.05

PRELIMINARY - Not for Construction -

© 2019 PYATOK ARCHITECTURE & URBAN DESIGN

12/7/2022 5:04:03 PM

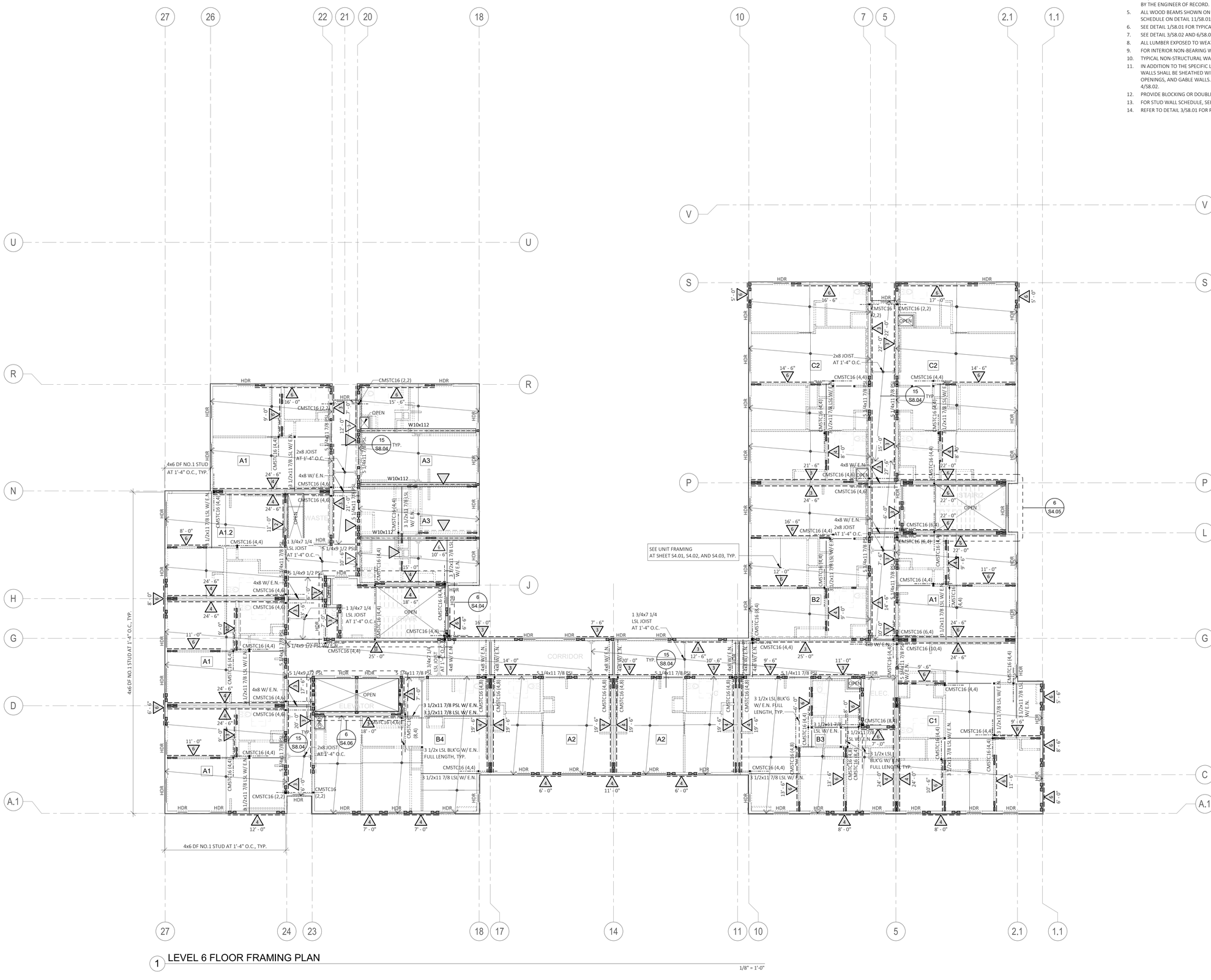

1 LEVEL 6 FLOOR FRAMING PLAN

1/8" = 1'-0"

FLOOR FRAMING NOTES

1. SEE GENERAL NOTES AND SYMBOLS ON SHEET S1.00 AND S1.01.
2. SEE DRAWINGS OTHER THAN STRUCTURAL FOR FLOOR DEPRESSIONS, MECHANICAL, ELECTRICAL AND SHAFT OPENINGS, ETC.
3. SEE DETAIL 12/S8.01 FOR ALLOWABLE HOLES AND NOTCHES AT FRAMING MEMBERS.
4. SAWN LUMBER BEAMS SPECIFIED MAY BE SUBSTITUTED WITH PREFABRICATED BEAMS (ie. LSL) AS A CONTRACTOR OPTION. THIS SUBSTITUTION SHALL BE SUBMITTED AND APPROVED BY THE ENGINEER OF RECORD.
5. ALL WOOD BEAMS SHOWN ON PLANS SHALL BE SUPPORTED ON WOOD POSTS PER SCHEDULE ON DETAIL 11/S8.01 UNLESS OTHERWISE NOTED.
6. SEE DETAIL 1/S8.01 FOR TYPICAL STUD WALL SIZE AND SPACING.
7. SEE DETAIL 3/S8.02 AND 6/S8.02 FOR FLOOR PLYWOOD NAILING.
8. ALL LUMBER EXPOSED TO WEATHER SHALL BE P.T. OR WOLMANIZED.
9. FOR INTERIOR NON-BEARING WALL OPENING SEE DETAIL 5/S8.01.
10. TYPICAL NON-STRUCTURAL WALL FRAMING SHALL BE 2x4 AT 1'-4" O.C. MINIMUM.
11. IN ADDITION TO THE SPECIFIC LOCATIONS SHOWN ON THE PLANS, ALL THE NEW EXTERIOR WALLS SHALL BE SHEATHED WITH PLYWOOD INCLUDING ABOVE AND BELOW ALL WALL OPENINGS, AND GABLE WALLS. NAIL PER MARK "6" PER SHEARWALL SCHEDULE ON DETAIL 4/S8.02.
12. PROVIDE BLOCKING OR DOUBLE JOIST FOR INTERIOR NON-BEARING WALL.
13. FOR STUD WALL SCHEDULE, SEE S1.01.
14. REFER TO DETAIL 3/S8.01 FOR REQUIRED TOP PLATE SPLICE INFORMATION.

UNIT PLAN SCHEDULE		
Unit	Sheet	Plan Number
UNIT A1	S4.01	1
UNIT A2	S4.01	2
UNIT A2.1	S4.01	3
UNIT A3	S4.01	4
UNIT B1	S4.02	1
UNIT B2	S4.02	2
UNIT B3	S4.02	3
UNIT B4	S4.02	4
UNIT B5	S4.02	1
UNIT C1	S4.03	2
UNIT C2	S4.03	3

PYATOK
1611 TELEGRAPH AVE.
SUITE 200
OAKLAND, CA 94612
T. 510.465.7010 | F. 510.465.8575
www.pyatok.com

element structural engineers, inc.
39675 Cedar Blvd., Suite 295C
Newark, California 94560
Tel: 510.573.1557
eFax: 973.924.0663
www.elementse.com

Owner

2700 INTERNATIONAL
OAKLAND, CA 94601

STAMP:
REGISTERED PROFESSIONAL ENGINEER TROY N. FONTELERA S 5536 STRUCTURAL
SIGNED DATE 12/09/2022

ISSUE SCHEDULE

NO.	ISSUE	DATE
	100% SD	5/11/2022
	50% DD	7/15/2022
	100% DD	9/16/2022
	50% CD	11/18/2022
	PERMIT SET	12/09/2022

REVISION SCHEDULE

NO.	ISSUE	DATE

JOB NUMBER:	ESE# 3395
DRAWN BY:	YL/BDT
CHECKED BY:	JTE
ISSUE DATE:	12/09/2022
SCALE:	1/8" = 1'-0"

TITLE:
LEVEL 6 FLOOR FRAMING PLAN

SHEET:
S2.06

PRELIMINARY - Not for Construction -

© 2019 PYATOK ARCHITECTURE & URBAN DESIGN

12/7/2022 5:04:07 PM

ROOF FRAMING NOTES

1. SEE GENERAL NOTES AND SYMBOLS ON SHEET S1.00 AND S1.01.
2. SEE DETAIL 12/S8.01 FOR ALLOWABLE HOLES AND NOTCHES AT FRAMING MEMBERS.
3. SEE DRAWINGS OTHER THAN STRUCTURAL FOR FLOOR DEPRESSIONS, MECHANICAL, ELECTRICAL AND SHAFT OPENINGS, ETC.
4. SAWN LUMBER BEAMS SPECIFIED MAY BE SUBSTITUTED WITH PREFABRICATED BEAMS (ie. LSL) AS A CONTRACTOR OPTION. THIS SUBSTITUTION SHALL BE SUBMITTED TO AND APPROVED BY THE ENGINEER OF RECORD.
5. ALL WOOD BEAMS SHOWN ON PLAN SHALL BE SUPPORTED ON WOOD POSTS PER SCHEDULE ON DETAIL 11/S8.01, U.O.N.
6. SEE DETAIL 3/S8.02 FOR ROOF PLYWOOD NAILING.
7. ALL LUMBER EXPOSED TO WEATHER SHALL BE P.T. OR WOLMANIZED.
8. FOR CEILING JOIST, SEE DET. 10/S8.04.
9. REFER TO DETAIL 3/S8.01 FOR REQUIRED TOP PLATE SPLICE INFORMATION.
10. FRAMING SUBCONTRACTORS SHALL VERIFY THAT THE MAXIMUM RIDGE HEIGHT (MAX BUILDING HEIGHT) IS AT LEAST 6" BELOW THE MAXIMUM ALLOWABLE. THE SUBCONTRACTOR TO CONTACT GENERAL CONTRACTOR AND ARCHITECT PRIOR TO SETTING THIS RIDGE.

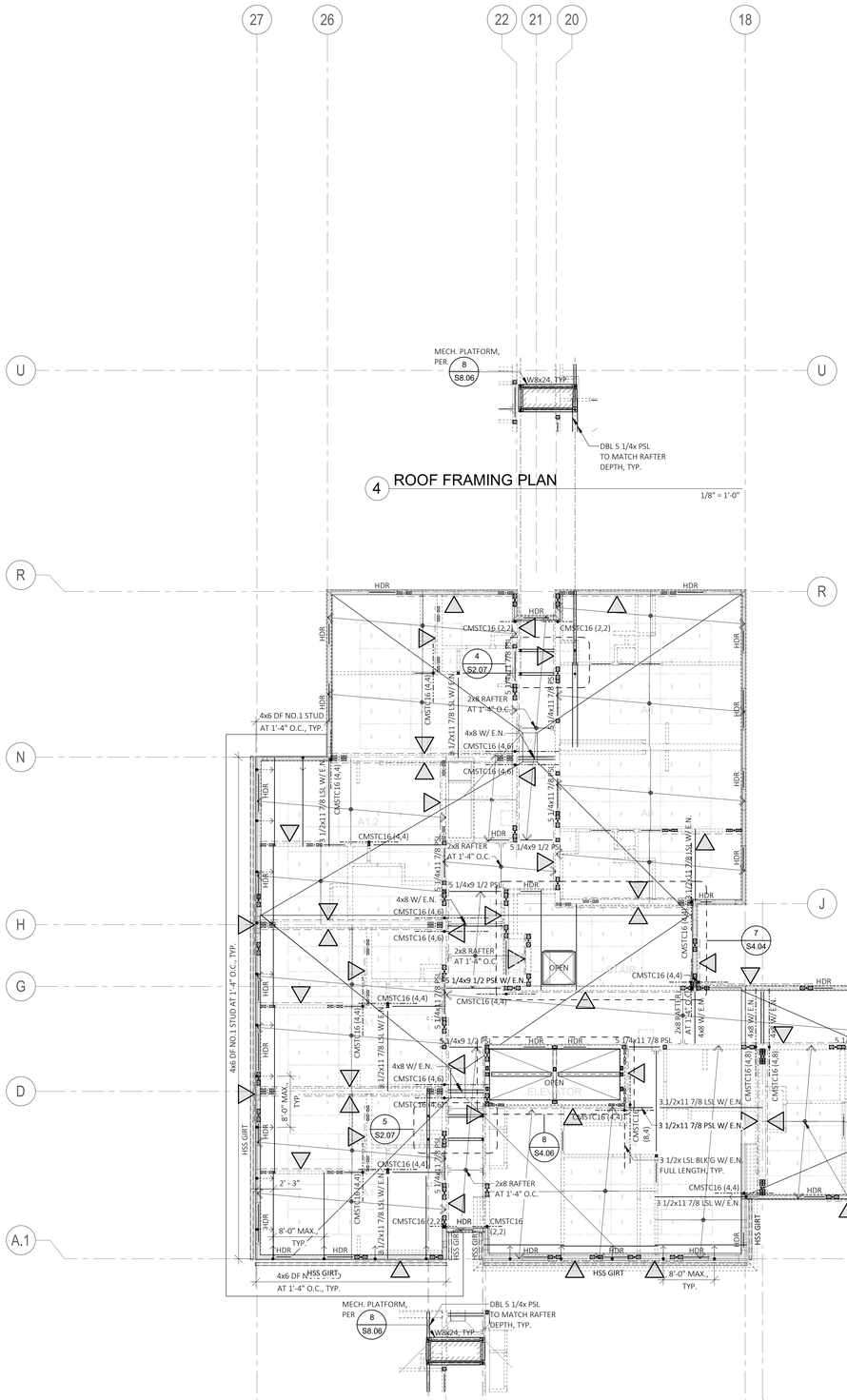

UNIT PLAN SCHEDULE		
Unit	Sheet	Plan Number
UNIT A1	S4.01	1
UNIT A2	S4.01	2
UNIT A2.1	S4.01	3
UNIT A3	S4.01	4
UNIT B1	S4.02	1
UNIT B2	S4.02	2
UNIT B3	S4.02	3
UNIT B4	S4.02	4
UNIT B5	S4.02	1
UNIT C1	S4.03	2
UNIT C2	S4.03	3

PYATOK
1611 TELEGRAPH AVE.
SUITE 200
OAKLAND, CA 94612
T. 510.465.7010 | F. 510.465.8575
www.pyatok.com

element structural engineers, inc.
39675 Cedar Blvd., Suite 295C
Newark, California 94560
Tel: 510.573.1557
eFax: 973.924.0663
www.elementse.com

Owner

2700 INTERNATIONAL
OAKLAND, CA 94601

STAMP:
REGISTERED PROFESSIONAL ENGINEER TROY N. FONTENEAU S 5536 STRUCTURAL STATE OF CALIFORNIA
SIGNED DATE: 12/09/2022

ISSUE SCHEDULE

NO.	ISSUE	DATE
	100% SD	5/11/2022
	50% DD	7/15/2022
	100% DD	9/16/2022
	50% CD	11/18/2022
	PERMIT SET	12/09/2022

REVISION SCHEDULE

NO.	ISSUE	DATE

JOB NUMBER:	ESE# 3395
DRAWN BY:	YL/BDT
CHECKED BY:	JTE
ISSUE DATE:	12/09/2022
SCALE:	1/8" = 1'-0"

TITLE:
ROOF FRAMING PLAN

SHEET:
S2.07

PRELIMINARY - Not for Construction -

© 2019 PYATOK ARCHITECTURE & URBAN DESIGN

12/7/2022 5:04:09 PM

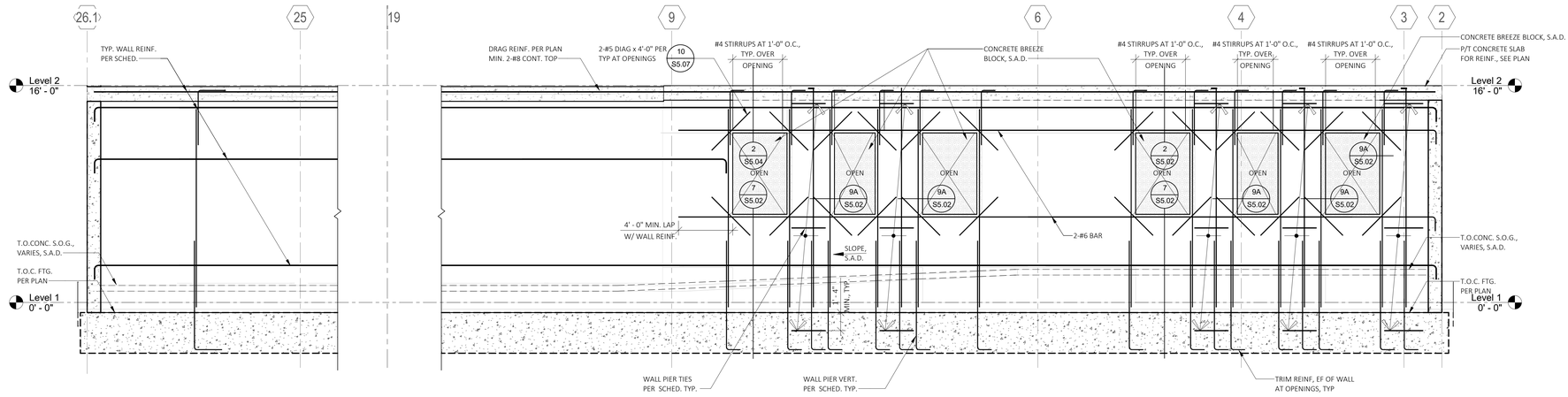

1 ELEVATION - GRID V.1

1/4" = 1'-0"

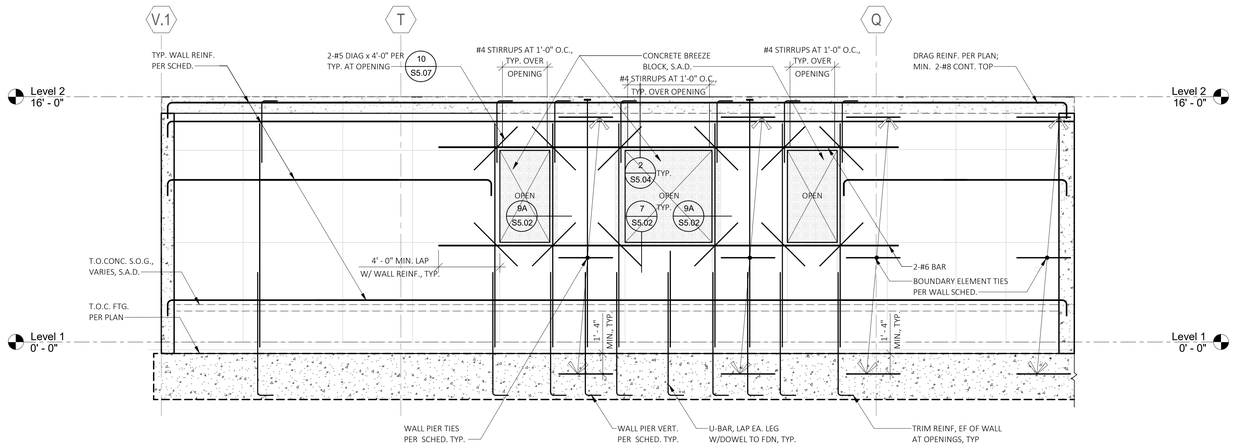

2 ELEVATION - GRID 2

1/4" = 1'-0"

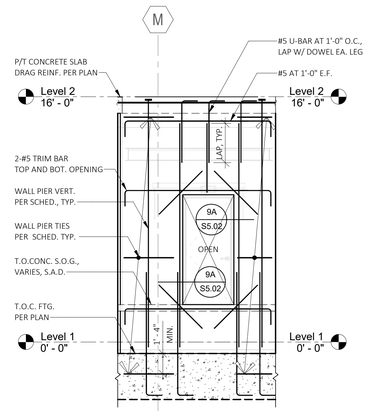

3 ELEVATION - GRID 3

1/4" = 1'-0"

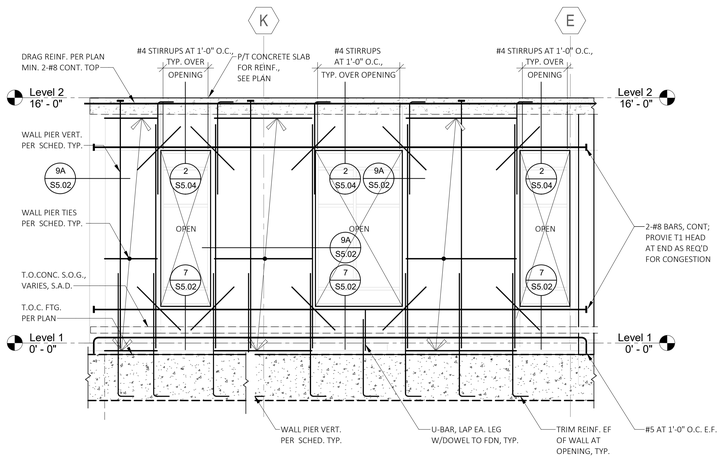

4 ELEVATION - GRID 2

1/4" = 1'-0"

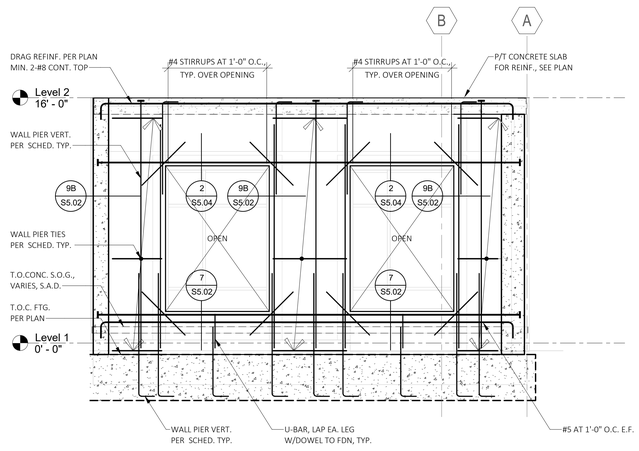

5 ELEVATION - GRID 1

1/4" = 1'-0"

CONCRETE WALL ELEVATION NOTES

1. FOR CONCRETE WALL THICKNESS AND REINFORCING SEE PLAN AND SCHEDULE DET. 1/S5.02.
2. SEE PLANS FOR REFERENCE DATUM ELEVATIONS. SEE ARCHITECTURAL DRAWING SHEET A2.21 FOR TOP OF SLAB ON GRADE ELEVATIONS.
3. FOR SIZE AND LOCATION OF OPENINGS REFER TO ARCHITECTUAL AND M.E.P. DRAWINGS. NO PENETRATIONS MAY BE MADE IN WALLS, EXCEPT AS SHOWN OR AS APPROVED BY STRUCTURAL ENGINEER. THE CONTRACTOR SHALL SUBMIT A COORDINATED WALL PENETRATION SHOP DRAWING INDICATING SIZE AND LOCATION OF ALL OPENINGS AND PENETRATIONS TO THE ARHITECT FOR THE ENGINEER'S REVIEW.
4. REFER TO DET. 10/S5.07 FOR TYPICAL REINFORCEMENT AT OPENINGS NOT NOTED ON THIS ELEVATION
5. LAP VERTICAL AND HORIZONTAL REINFORCING BARS PER 3/S5.01, UNLESS OTHERWISE NOTED.
6. HORIZONTAL REINFORCING BARS SHALL START 2" ABOVE THE TOP OF FOOTING.
7. CLOSED TIES AT BOUNDARY ELEMENTS AND JAMB REINFORCING BARS SHALL EXTEND INTO FOOTING AT SPECIFIED SPACING UNTIL REACHING THE BOTTOM FOUNDATION REBAR.

PYATOK
1611 TELEGRAPH AVE.
SUITE 200
OAKLAND, CA 94612
T. 510.465.7010 | F. 510.465.8575
www.pyatok.com

element structural engineers, inc.
39675 Cedar Blvd., Suite 295C
Newark, California 94560
Tel: 510.573.1557
eFax: 973.924.0663
www.elementse.com

Owner

2700 INTERNATIONAL
OAKLAND, CA 94601

STAMP:
REGISTERED PROFESSIONAL ENGINEER TRAVIS R. FONTENEAU S 5536 STRUCTURAL STATE OF CALIFORNIA
SIGNED DATE: 12/09/2022

ISSUE SCHEDULE

NO.	ISSUE	DATE
	100% SD	5/11/2022
	50% DD	7/15/2022
	100% DD	9/16/2022
	50% CD	11/18/2022
	PERMIT SET	12/09/2022

REVISION SCHEDULE

NO.	ISSUE	DATE

JOB NUMBER:	ESE# 3395
DRAWN BY:	YL/BDT
CHECKED BY:	JTE
ISSUE DATE:	12/09/2022
SCALE:	1/4" = 1'-0"

TITLE:
ELEVATIONS

SHEET:
S3.01

PRELIMINARY - Not for Construction -

© 2019 PYATOK ARCHITECTURE & URBAN DESIGN

12/7/2022 5:04:15 PM

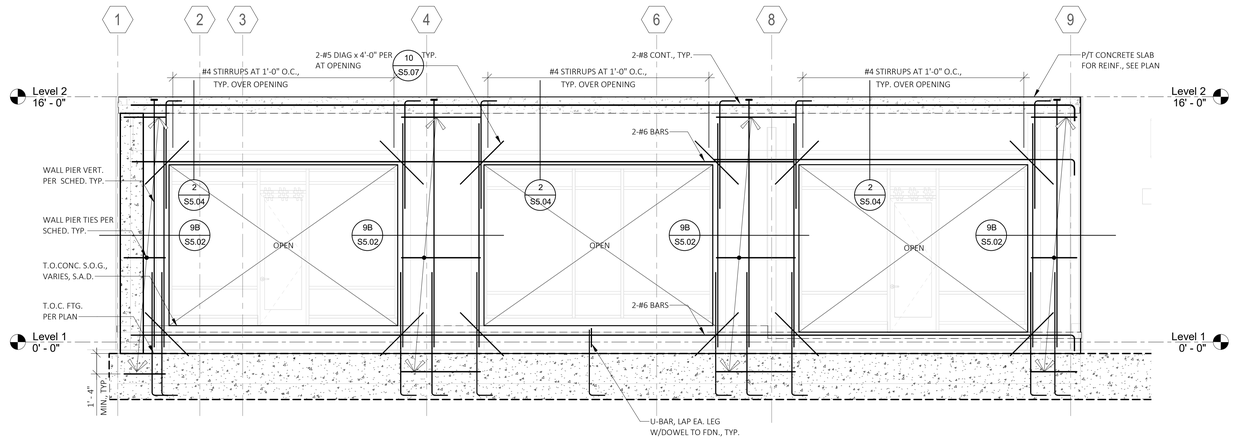

1 ELEVATION - GRID A

1/4" = 1'-0"

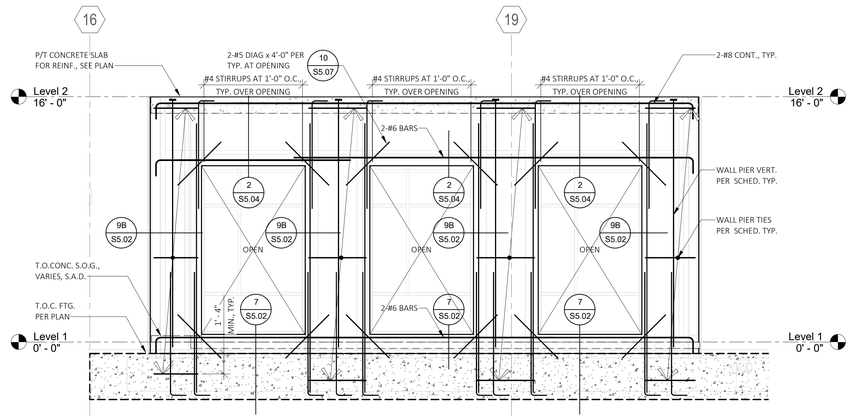

2 ELEVATION - GRID A

1/4" = 1'-0"

3 ELEVATION - GRID 27.1

1/4" = 1'-0"

4 ELEVATION - GRID 27.1

1/4" = 1'-0"

5 ELEVATION - GRID 27.1

1/4" = 1'-0"

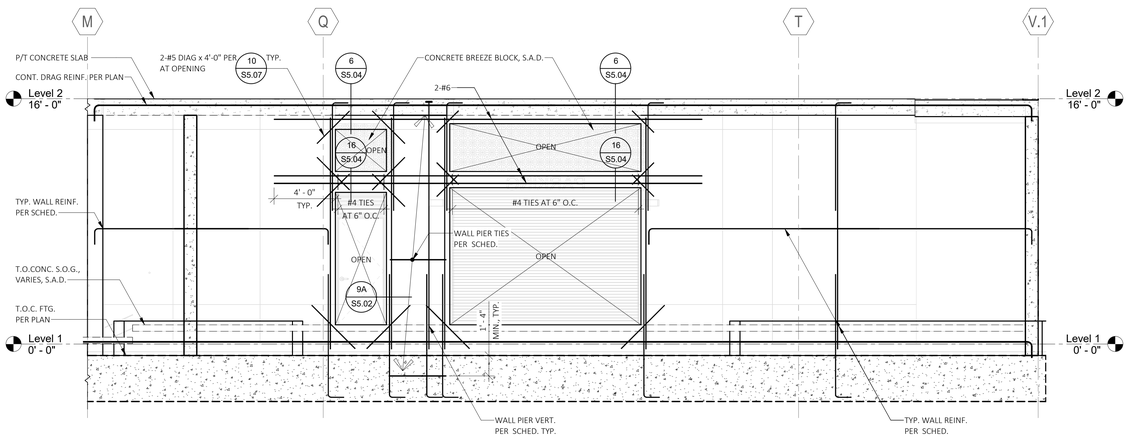

6 ELEVATION - GRID 26.1

1/4" = 1'-0"

CONCRETE WALL ELEVATION NOTES

1. FOR CONCRETE WALL THICKNESS AND REINFORCING SEE PLAN AND SCHEDULE DET. 1/S5.02.
2. SEE PLANS FOR REFERENCE DATUM ELEVATIONS. SEE ARCHITECTURAL DRAWING SHEET A2.21 FOR TOP OF SLAB ON GRADE ELEVATIONS.
3. FOR SIZE AND LOCATION OF OPENINGS REFER TO ARCHITECTUAL AND M.E.P. DRAWINGS. NO PENETRATIONS MAY BE MADE IN WALLS, EXCEPT AS SHOWN OR AS APPROVED BY STRUCTURAL ENGINEER. THE CONTRACTOR SHALL SUBMIT A COORDINATED WALL PENETRATION SHOP DRAWING INDICATING SIZE AND LOCATION OF ALL OPENINGS AND PENETRATIONS TO THE ARHITECT FOR THE ENGINEER'S REVIEW.
4. REFER TO DET. 10/S5.07 FOR TYPICAL REINFORCEMENT AT OPENINGS NOT NOTED ON THIS ELEVATION
5. LAP VERTICAL AND HORIZONTAL REINFORCING BARS PER 3/S5.01, UNLESS OTHERWISE NOTED.
6. HORIZONTAL REINFORCING BARS SHALL START 2" ABOVE THE TOP OF FOOTING.
7. CLOSED TIES AT BOUNDARY ELEMENTS AND JAMB REINFORCING BARS SHALL EXTEND INTO FOOTING AT SPECIFIED SPACING UNTIL REACHING THE BOTTOM FOUNDATION REBAR.

PYATOK
1611 TELEGRAPH AVE.
SUITE 200
OAKLAND, CA 94612
T. 510.465.7010 | F. 510.465.8575
www.pyatok.com

element structural engineers, inc.
39675 Cedar Blvd., Suite 295C
Newark, California 94560
Tel: 510.573.1557
eFax: 973.924.0663
www.elementse.com

Owner

2700 INTERNATIONAL
OAKLAND, CA 94601

STAMP:
REGISTERED PROFESSIONAL ENGINEER TROY N. FONTELERA S 5536 STRUCTURAL STATE OF CALIFORNIA
SIGNED DATE: 12/09/2022

ISSUE SCHEDULE

NO.	ISSUE	DATE
	100% SD	5/11/2022
	50% DD	7/15/2022
	100% DD	9/16/2022
	50% CD	11/18/2022
	PERMIT SET	12/09/2022

REVISION SCHEDULE

NO.	ISSUE	DATE

JOB NUMBER:	ESE# 3395
DRAWN BY:	YL/BDT
CHECKED BY:	JTE
ISSUE DATE:	12/09/2022
SCALE:	1/4" = 1'-0"

TITLE:
ELEVATIONS

SHEET:
S3.02

PRELIMINARY - Not for Construction -

© 2019 PYATOK ARCHITECTURE & URBAN DESIGN

12/7/2022 5:04:21 PM

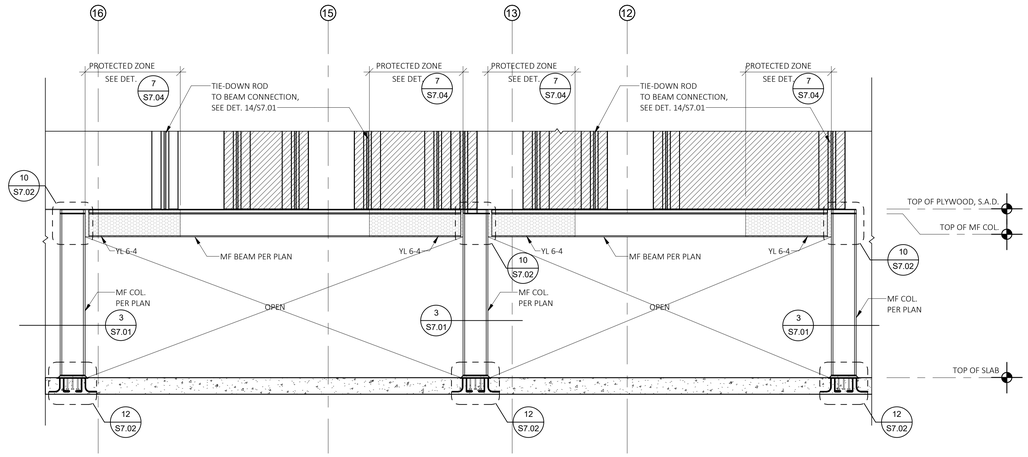

NOTE:
1. FOR INFO. NOT SHOWN, SEE SHEET S7.04 AND S7.05.
2. GRIDLINES SHOWN ARE FOR REFERENCE ONLY AND SHOULD NOT BE USED FOR DIMENSIONING OR LOCATING OF MOMENT FRAME, S.A.D. FOR LOCATION.

3 MF AT GRID G

1/4" = 1'-0"

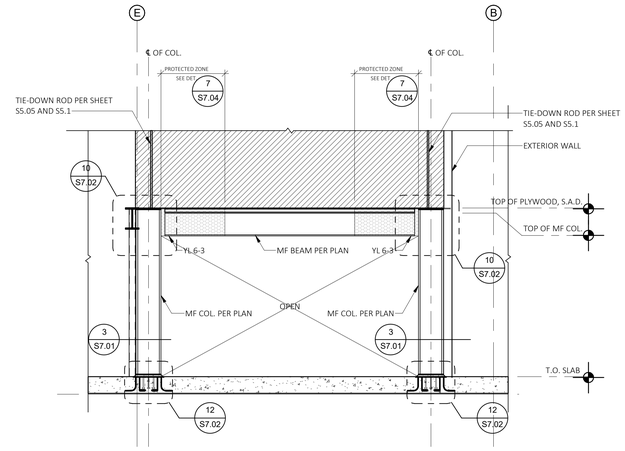

NOTE:
1. FOR INFO. NOT SHOWN, SEE SHEET S7.04 AND S7.05.
2. GRIDLINES SHOWN ARE FOR REFERENCE ONLY AND SHOULD NOT BE USED FOR DIMENSIONING OR LOCATING OF MOMENT FRAME, S.A.D. FOR LOCATION.

1 MF AT GRID 14

1/4" = 1'-0"

NOTE:
1. FOR INFO. NOT SHOWN, SEE SHEET S7.04 AND S7.05.
2. GRIDLINES SHOWN ARE FOR REFERENCE ONLY AND SHOULD NOT BE USED FOR DIMENSIONING OR LOCATING OF MOMENT FRAME, S.A.D. FOR LOCATION.

2 MF AT GRID 16

1/4" = 1'-0"

PYATOK
1611 TELEGRAPH AVE.
SUITE 200
OAKLAND, CA 94612
T. 510.465.7010 | F. 510.465.8575
www.pyatok.com

element structural engineers, inc.
39675 Cedar Blvd., Suite 295C
Newark, California 94560
Tel: 510.573.1557
eFax: 973.924.0663
www.elementse.com

Owner

2700 INTERNATIONAL

OAKLAND, CA 94601

STAMP:

REGISTERED PROFESSIONAL ENGINEER — THUY N. FONTELERA — S 5536 — STRUCTURAL — STATE OF CALIFORNIA

SIGNED DATE: 12/09/2022

ISSUE SCHEDULE

NO.	ISSUE	DATE
	100% SD	5/11/2022
	50% DD	7/15/2022
	100% DD	9/16/2022
	50% CD	11/18/2022
	PERMIT SET	12/09/2022

REVISION SCHEDULE

NO.	ISSUE	DATE

JOB NUMBER:	ESE# 3395
DRAWN BY:	YL/BDT
CHECKED BY:	JTE
ISSUE DATE:	12/09/2022
SCALE:	1/4" = 1'-0"

TITLE:

MOMENT FRAME ELEVATIONS

SHEET:

S3.03

PRELIMINARY - Not for Construction -

© 2019 PYATOK ARCHITECTURE & URBAN DESIGN

12/7/2022 5:04:23 PM

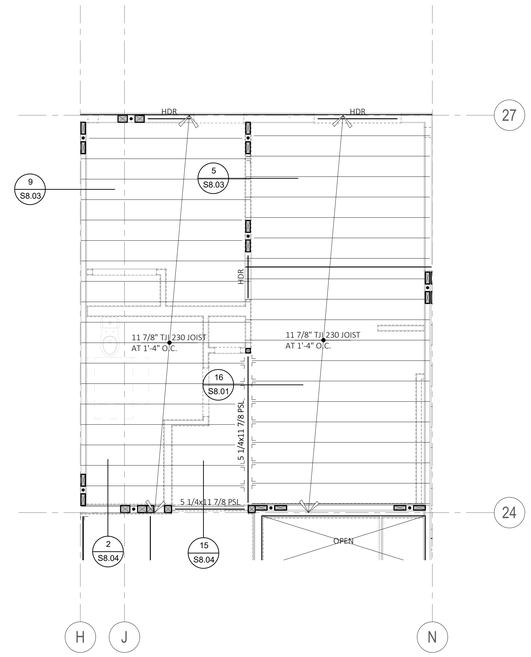

3 UNIT FLOOR FRAMING PLAN
UNIT A2.1

1/4" = 1'-0"

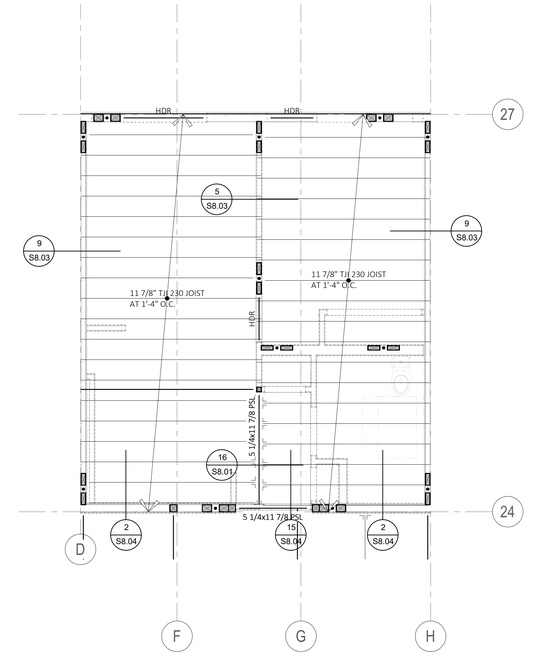

1 UNIT FLOOR FRAMING PLAN
UNIT A1

1/4" = 1'-0"

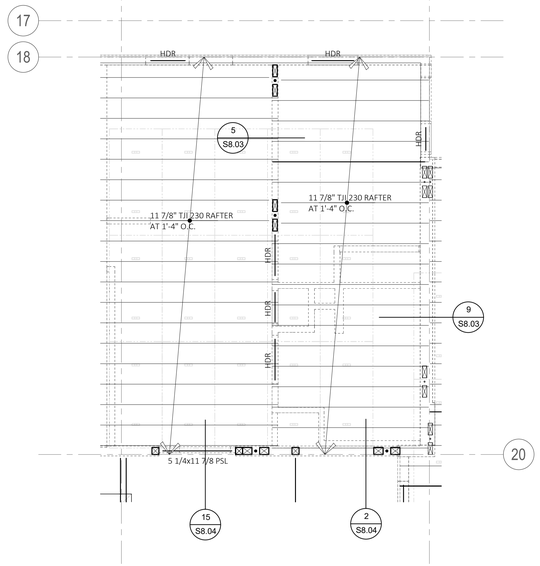

4 UNIT FLOOR FRAMING PLAN
UNIT A3

1/4" = 1'-0"

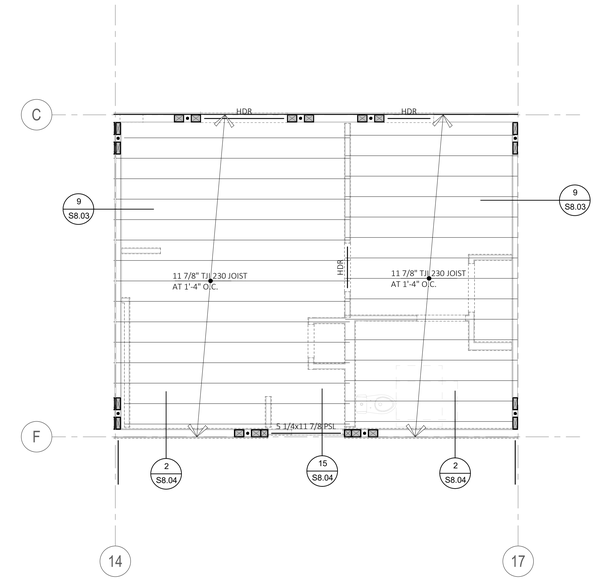

2 UNIT FLOOR FRAMING PLAN
UNIT A2

1/4" = 1'-0"

PYATOK
1611 TELEGRAPH AVE.
SUITE 200
OAKLAND, CA 94612
T. 510.465.7010 | F. 510.465.8575
www.pyatok.com

element
structural engineers, inc.
39675 Cedar Blvd., Suite 295C
Newark, California 94560
Tel: 510.573.1557
eFax: 973.924.0663
www.elementse.com

Owner

2700 INTERNATIONAL
OAKLAND, CA 94601

STAMP:
REGISTERED PROFESSIONAL ENGINEER
TROY N. FONTENOT
S 5536
STRUCTURAL
STATE OF CALIFORNIA
SIGNED DATE: 12/09/2022

ISSUE SCHEDULE

NO.	ISSUE	DATE
	100% SD	5/11/2022
	50% DD	7/15/2022
	100% DD	9/16/2022
	50% CD	11/18/2022
	PERMIT SET	12/09/2022

REVISION SCHEDULE

NO.	ISSUE	DATE

JOB NUMBER:	ESE# 3395
DRAWN BY:	YL/BDT
CHECKED BY:	JTE
ISSUE DATE:	12/09/2022
SCALE:	1/4" = 1'-0"

TITLE:
UNIT FLOOR FRAMING PLANS - UNIT A

SHEET:
S4.01

PRELIMINARY - Not for Construction -

© 2019 PYATOK ARCHITECTURE & URBAN DESIGN

12/7/2022 5:04:26 PM

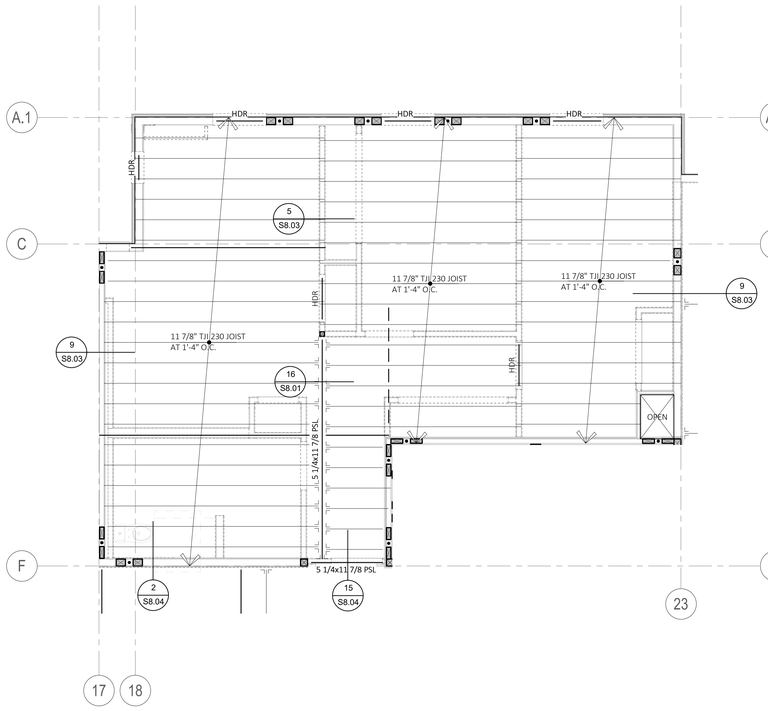

4 UNIT FLOOR FRAMING PLAN
UNIT B4 1/4" = 1'-0"

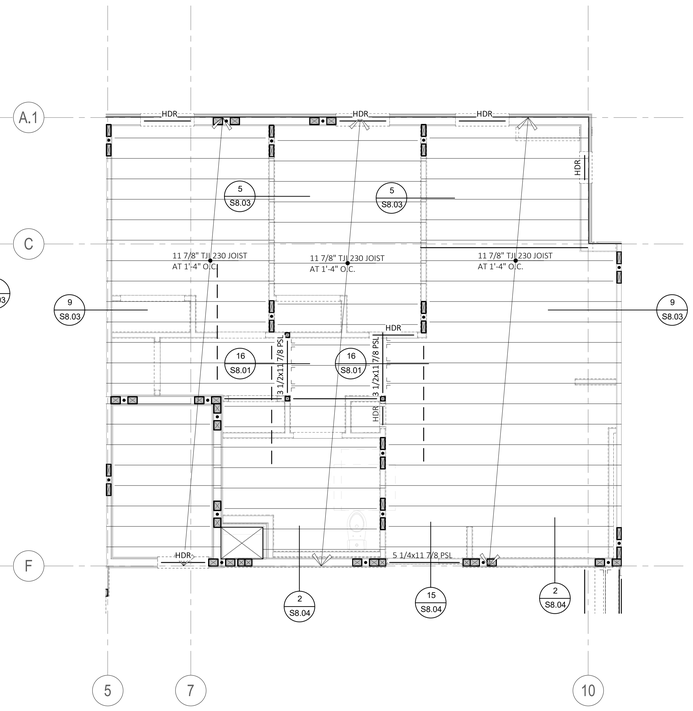

3 UNIT FLOOR FRAMING PLAN
UNIT B3 1/4" = 1'-0"

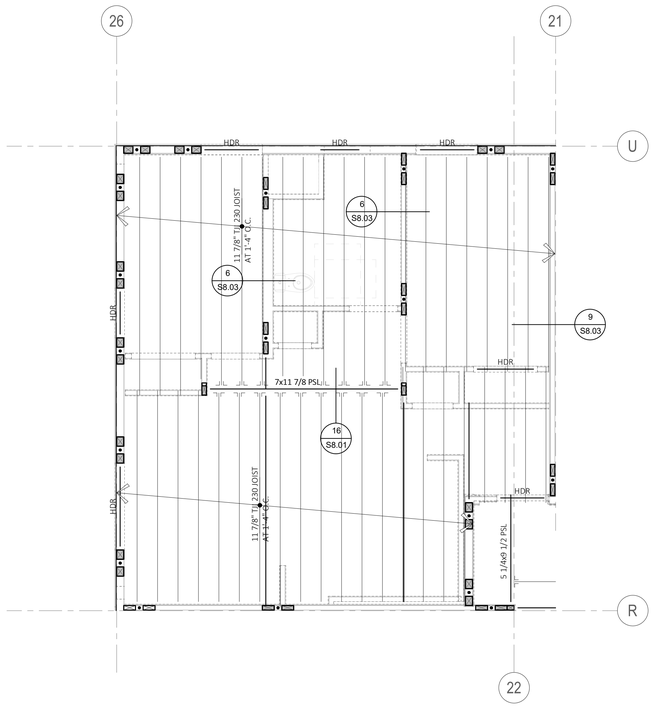

1 UNIT FLOOR FRAMING PLAN
UNIT B1 (LEVEL 3), SIM. UNIT B1 (LEVEL 4) 1/4" = 1'-0"

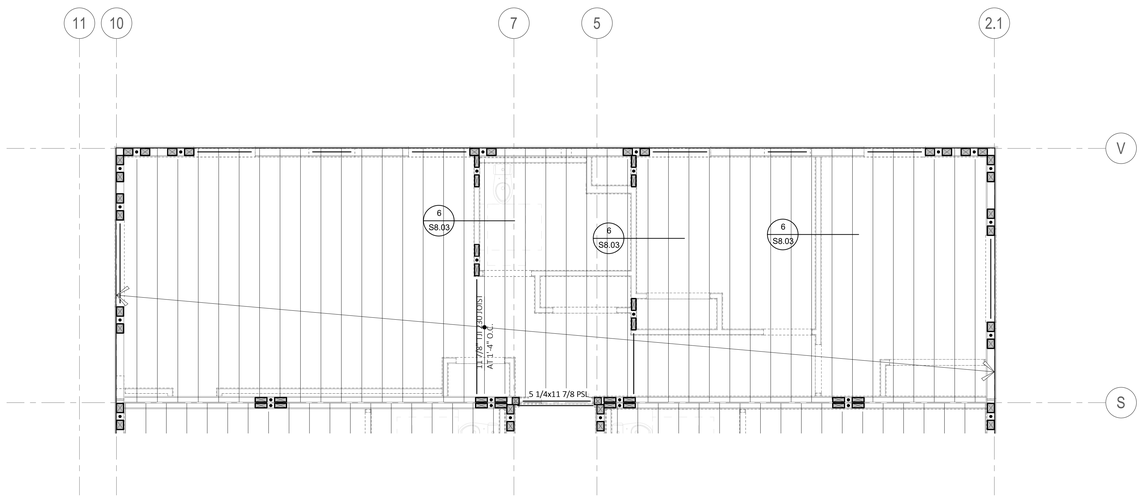

5 UNIT FLOOR FRAMING PLAN
UNIT B5 1/4" = 1'-0"

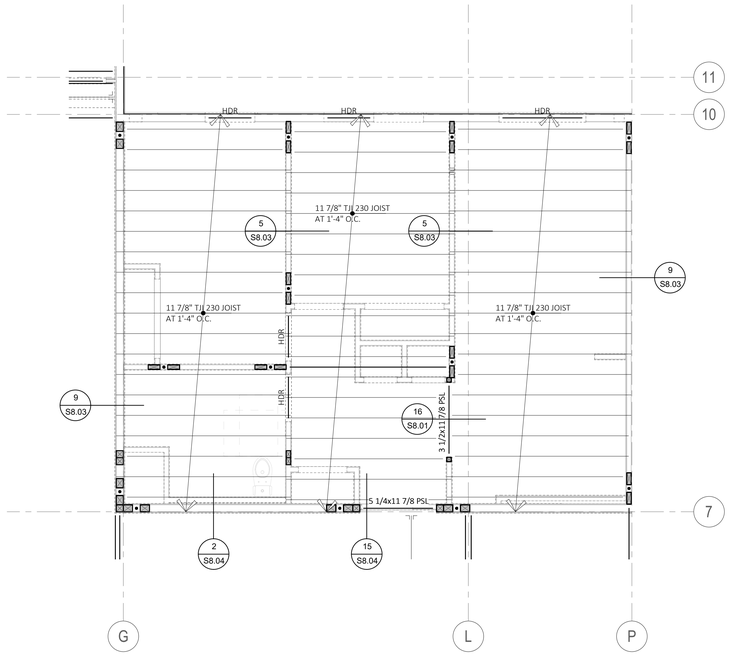

2 UNIT FLOOR FRAMING PLAN
UNIT B2 1/4" = 1'-0"

PYATOK
1611 TELEGRAPH AVE.
SUITE 200
OAKLAND, CA 94612
T. 510.465.7010 | F. 510.465.8575
www.pyatok.com

element
structural engineers, inc.
39675 Cedar Blvd., Suite 295C
Newark, California 94560
Tel: 510.573.1557
eFax: 973.924.0663
www.elementse.com

Owner

2700 INTERNATIONAL
OAKLAND, CA 94601

STAMP:
REGISTERED PROFESSIONAL ENGINEER
TRUY N. FONTELERA
S 5536
STRUCTURAL
SIGNED DATE: 12/09/2022

ISSUE SCHEDULE

NO.	ISSUE	DATE
	100% SD	5/11/2022
	50% DD	7/15/2022
	100% DD	9/16/2022
	50% CD	11/18/2022
	PERMIT SET	12/09/2022

REVISION SCHEDULE

NO.	ISSUE	DATE

JOB NUMBER:	ESE# 3395
DRAWN BY:	YL/BDT
CHECKED BY:	JTE
ISSUE DATE:	12/09/2022
SCALE:	1/4" = 1'-0"

TITLE:
UNIT FLOOR FRAMING PLANS - UNIT B

SHEET:
S4.02

PRELIMINARY - Not for Construction -

© 2019 PYATOK ARCHITECTURE & URBAN DESIGN

12/7/2022 5:04:29 PM

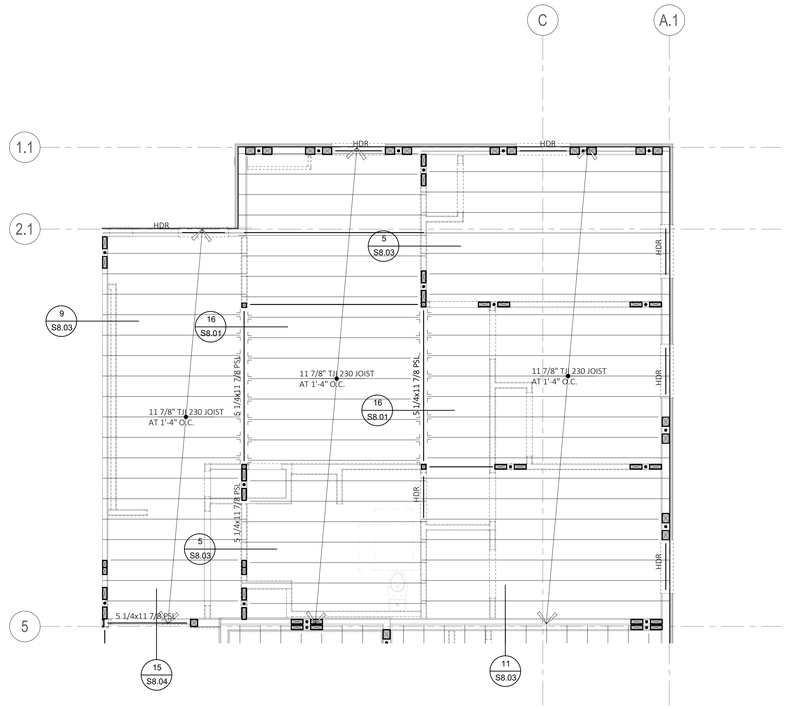

1 UNIT FLOOR FRAMING PLAN
UNIT C1

1/4" = 1'-0"

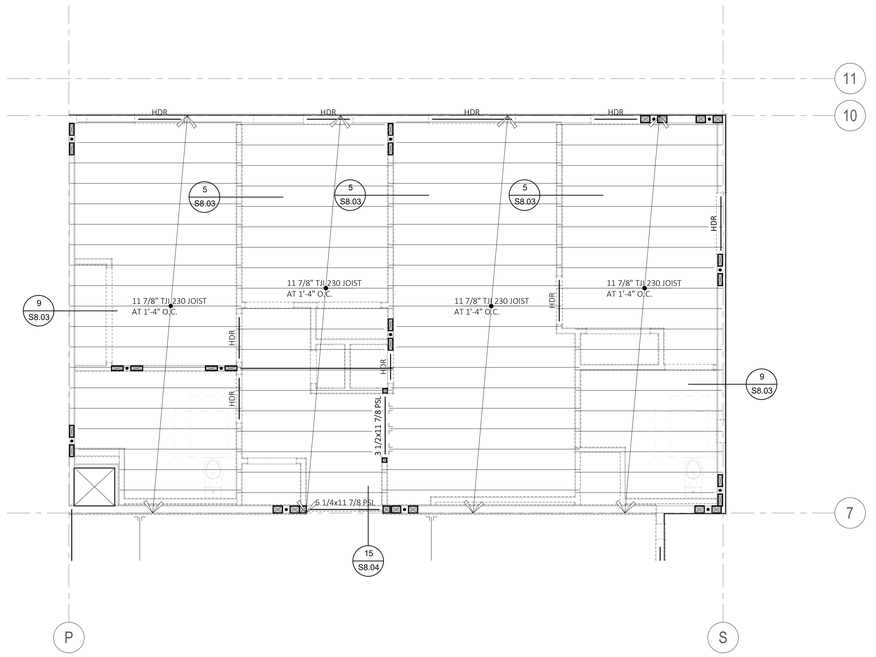

2 UNIT FLOOR FRAMING PLAN
UNIT C2

1/4" = 1'-0"

PYATOK
1611 TELEGRAPH AVE.
SUITE 200
OAKLAND, CA 94612
T. 510.465.7010 | F. 510.465.8575
www.pyatok.com

element
structural engineers, inc.
39675 Cedar Blvd., Suite 295C
Newark, California 94560
Tel: 510.573.1557
eFax: 973.924.0663
www.elementse.com

Owner

2700 INTERNATIONAL
OAKLAND, CA 94601

STAMP:
REGISTERED PROFESSIONAL ENGINEER
TRUY N. FONTELERA
S 5536
STRUCTURAL
STATE OF CALIFORNIA
SIGNED DATE: 12/09/2022

ISSUE SCHEDULE

NO.	ISSUE	DATE
	100% SD	5/11/2022
	50% DD	7/15/2022
	100% DD	9/16/2022
	50% CD	11/18/2022
	PERMIT SET	12/09/2022

REVISION SCHEDULE

NO.	ISSUE	DATE

JOB NUMBER:	ESE# 3395
DRAWN BY:	YL/BDT
CHECKED BY:	JTE
ISSUE DATE:	12/09/2022
SCALE:	1/4" = 1'-0"

TITLE:
UNIT FLOOR FRAMING PLANS - UNIT C

SHEET:
S4.03

PRELIMINARY - Not for Construction -

© 2019 PYATOK ARCHITECTURE & URBAN DESIGN

12/7/2022 5:04:31 PM

STEEL STAIRS ARE A DEFERRED APPROVAL ITEM DESIGNED BY OTHERS

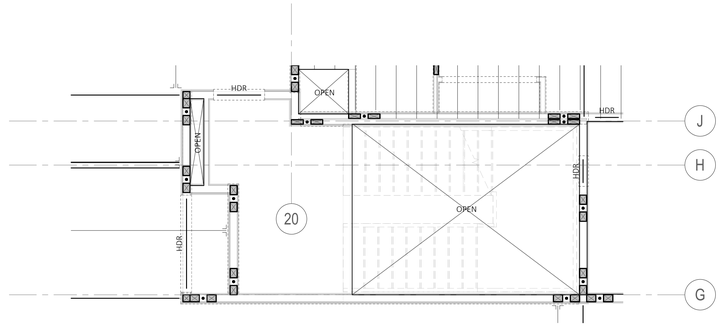

4 STAIR FRAMING PLAN
STAIR 1 LEVEL 4
1/4" = 1'-0"

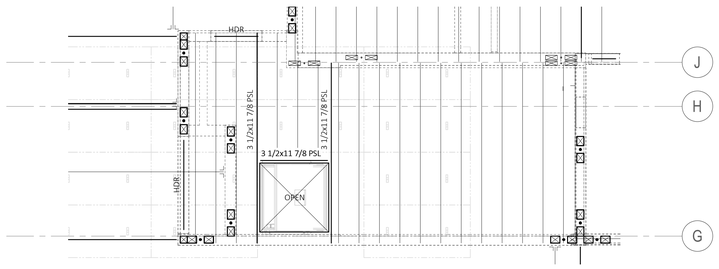

7 ROOF FRAMING PLAN
STAIR 1
1/4" = 1'-0"

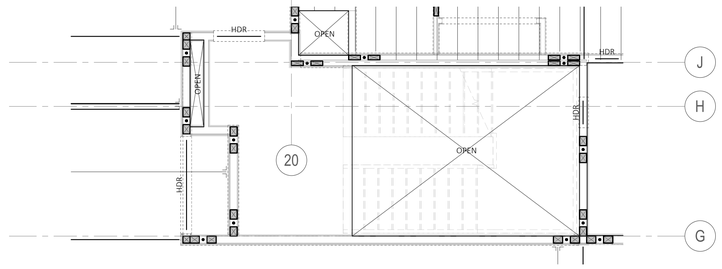

3 STAIR FRAMING PLAN
STAIR 1 LEVEL 3
1/4" = 1'-0"

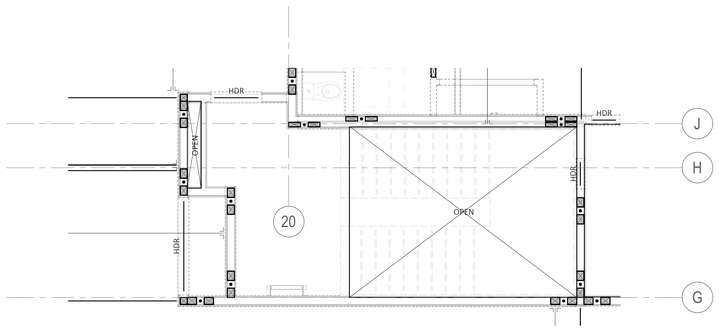

6 STAIR FRAMING PLAN
STAIR 1 LEVEL 6
1/4" = 1'-0"

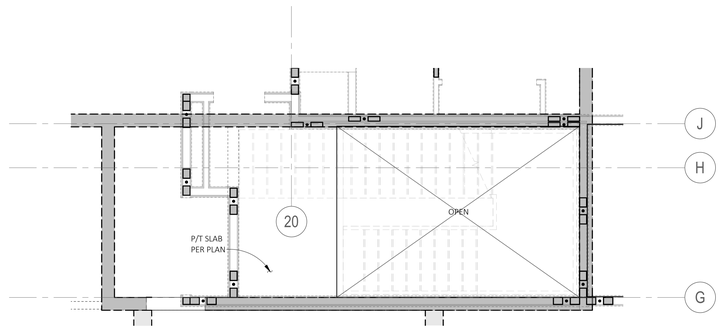

2 STAIR FRAMING PLAN
STAIR 1 LEVEL 2
1/4" = 1'-0"

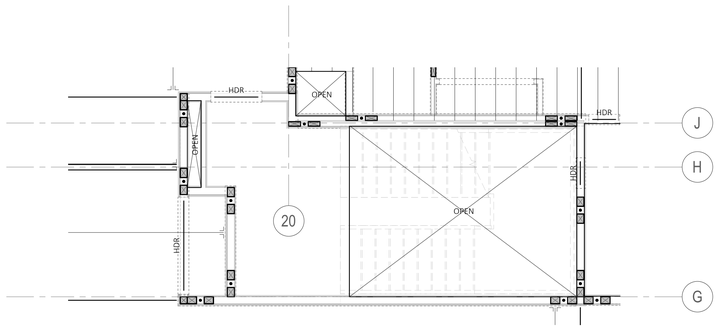

5 STAIR FRAMING PLAN
STAIR 1 LEVEL 5
1/4" = 1'-0"

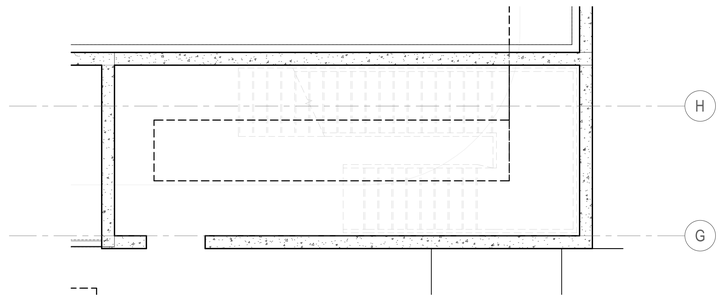

1 FOUNDATION PLAN
STAIR 1
1/4" = 1'-0"

PYATOK
1611 TELEGRAPH AVE.
SUITE 200
OAKLAND, CA 94612
T. 510.465.7010 | F. 510.465.8575
www.pyatok.com

element
structural engineers, inc.
39675 Cedar Blvd., Suite 295C
Newark, California 94560
Tel: 510.573.1557
eFax: 973.924.0663
www.elementse.com

Owner

2700 INTERNATIONAL
OAKLAND, CA 94601

STAMP:
REGISTERED PROFESSIONAL ENGINEER
TRUY N. FONTELERA
S 5536
STRUCTURAL
STATE OF CALIFORNIA
SIGNED DATE: 12/09/2022

ISSUE SCHEDULE

NO.	ISSUE	DATE
	100% SD	5/11/2022
	50% DD	7/15/2022
	100% DD	9/16/2022
	50% CD	11/18/2022
	PERMIT SET	12/09/2022

REVISION SCHEDULE

NO.	ISSUE	DATE

JOB NUMBER:	ESE# 3395
DRAWN BY:	YL/BDT
CHECKED BY:	JTE
ISSUE DATE:	12/09/2022
SCALE:	1/4" = 1'-0"

TITLE:
STAIR 1 FRAMING PLANS

SHEET:
S4.04

PRELIMINARY - Not for Construction -

© 2019 PYATOK ARCHITECTURE & URBAN DESIGN

12/7/2022 5:04:35 PM

STEEL STAIRS ARE A DEFERRED APPROVAL ITEM DESIGNED BY OTHERS

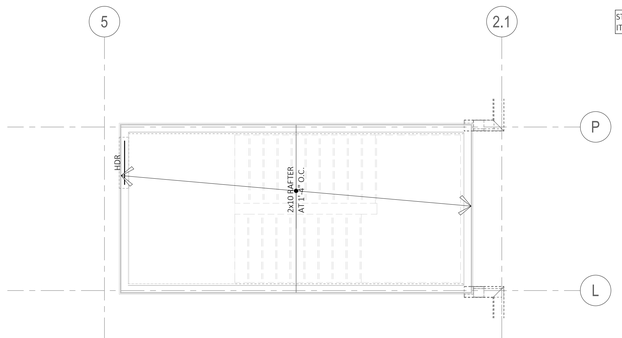

8 UPPER ROOF FRAMING PLAN
STAIR 2
1/4" = 1'-0"

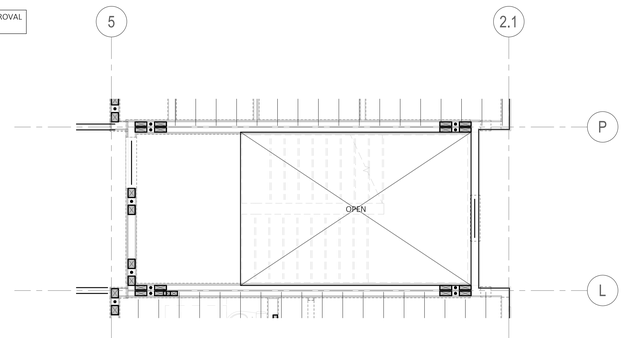

4 STAIR FRAMING PLAN
STAIR 2 LEVEL 4
1/4" = 1'-0"

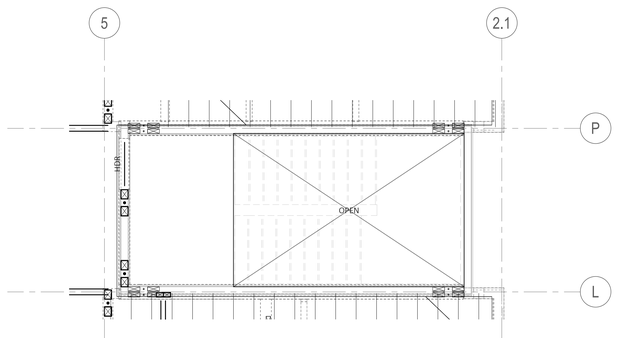

7 ROOF FRAMING PLAN
STAIR 2
1/4" = 1'-0"

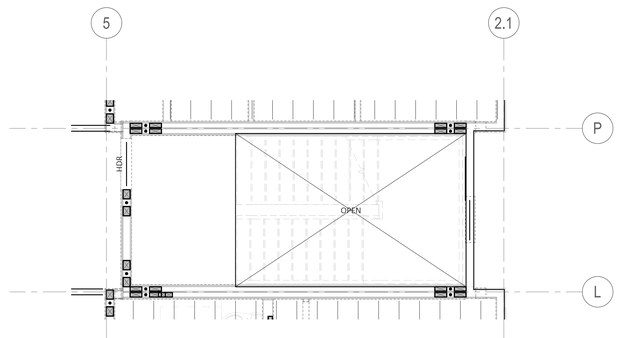

3 STAIR FRAMING PLAN
STAIR 2 LEVEL 3
1/4" = 1'-0"

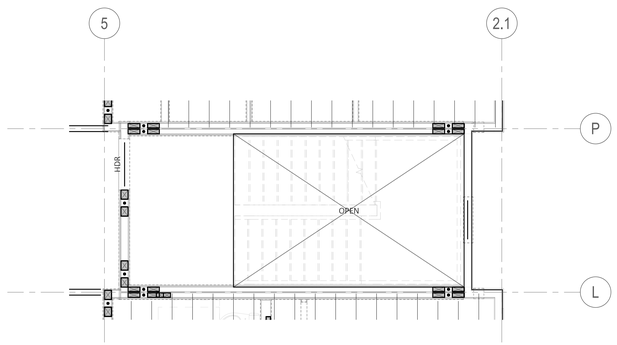

6 STAIR FRAMING PLAN
STAIR 2 LEVEL 6
1/4" = 1'-0"

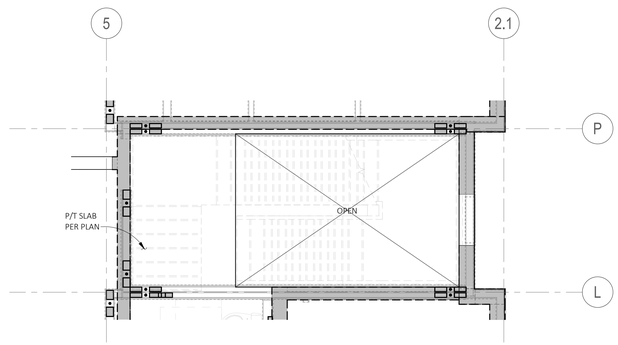

2 STAIR FRAMING PLAN
STAIR 2 LEVEL 2
1/4" = 1'-0"

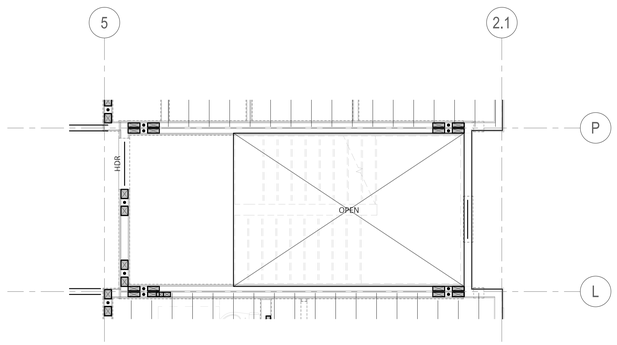

5 STAIR FRAMING PLAN
STAIR 2 LEVEL 5
1/4" = 1'-0"

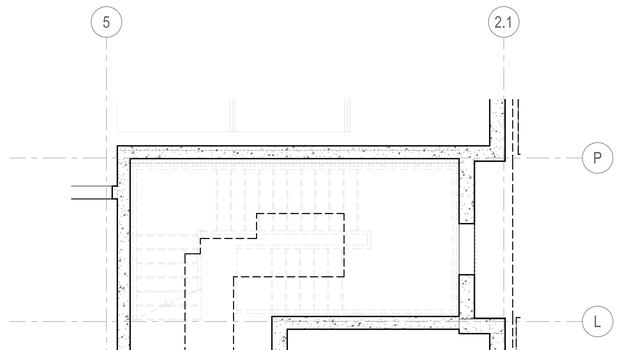

1 FOUNDATION PLAN
STAIR 2
1/4" = 1'-0"

PYATOK
1611 TELEGRAPH AVE.
SUITE 200
OAKLAND, CA 94612
T. 510.465.7010 | F. 510.465.8575
www.pyatok.com

element
structural engineers, inc.
39675 Cedar Blvd., Suite 295C
Newark, California 94560
Tel: 510.573.1557
eFax: 973.924.0663
www.elementse.com

Owner

2700 INTERNATIONAL
OAKLAND, CA 94601

STAMP:
REGISTERED PROFESSIONAL ENGINEER TROY N. FONTELERA S 5536 STRUCTURAL STATE OF CALIFORNIA
SIGNED DATE: 12/09/2022

ISSUE SCHEDULE

NO.	ISSUE	DATE
	100% SD	5/11/2022
	50% DD	7/15/2022
	100% DD	9/16/2022
	50% CD	11/18/2022
	PERMIT SET	12/09/2022

REVISION SCHEDULE

NO.	ISSUE	DATE

JOB NUMBER:	ESE# 3395
DRAWN BY:	YL/BDT
CHECKED BY:	JTE
ISSUE DATE:	12/09/2022
SCALE:	1/4" = 1'-0"

TITLE:
STAIR 2 FRAMING PLANS

SHEET:
S4.05

PRELIMINARY - Not for Construction -

© 2019 PYATOK ARCHITECTURE & URBAN DESIGN

12/7/2022 5:04:38 PM

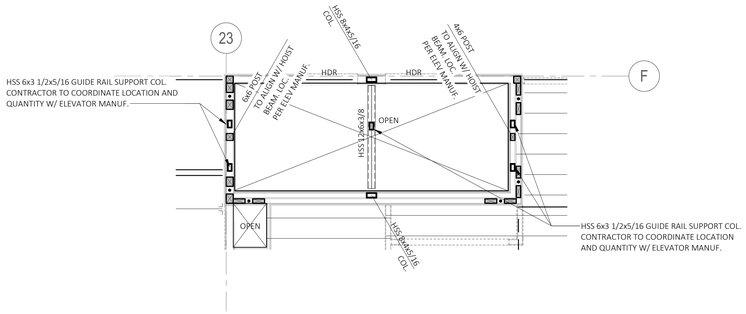

5 LEVEL 5 FLOOR FRAMING PLAN

1/4" = 1'-0"

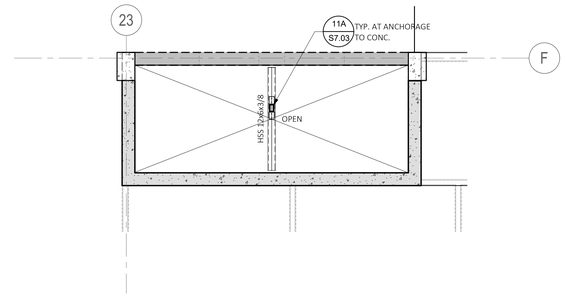

1 FOUNDATION PLAN
ELEVATOR

1/4" = 1'-0"

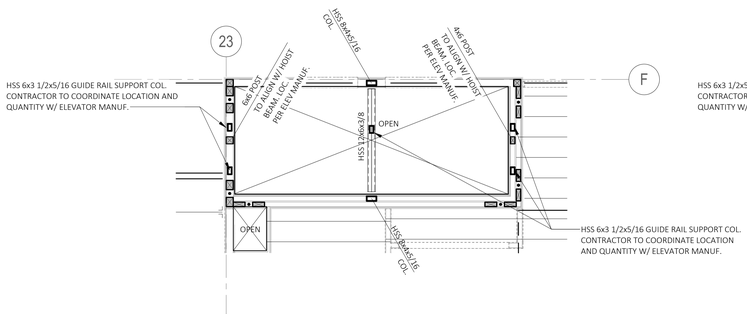

6 ELEVATOR FRAMING PLAN
LEVEL 6

1/4" = 1'-0"

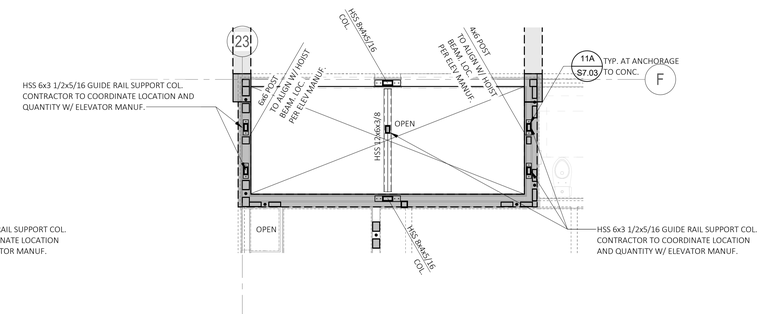

2 ELEVATOR FRAMING PLAN
PODIUM/LEVEL 2

1/4" = 1'-0"

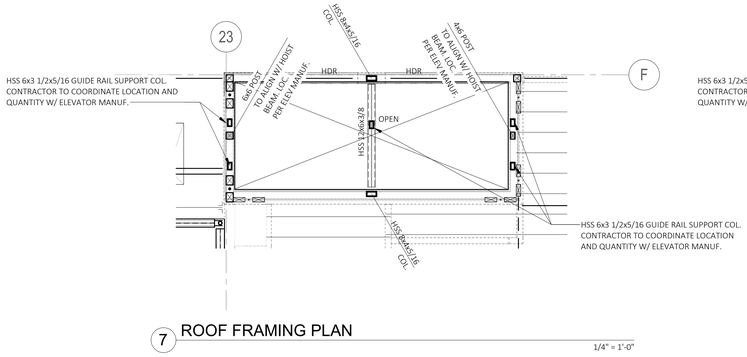

7 ROOF FRAMING PLAN

1/4" = 1'-0"

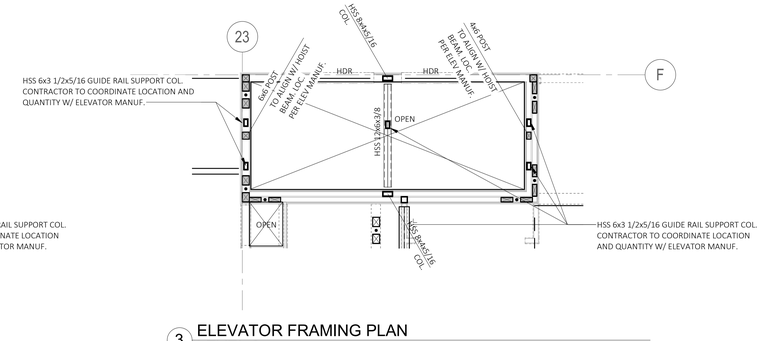

3 ELEVATOR FRAMING PLAN
LEVEL 3

1/4" = 1'-0"

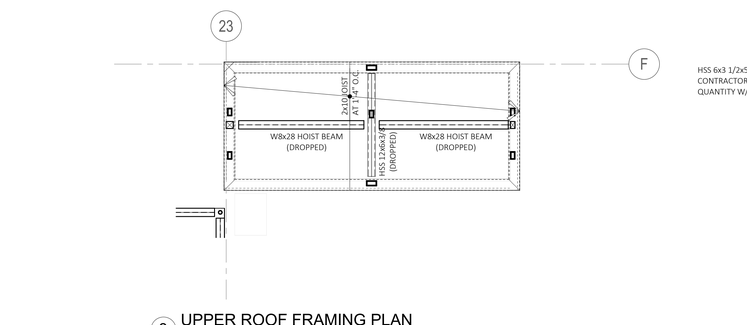

8 UPPER ROOF FRAMING PLAN

1/4" = 1'-0"

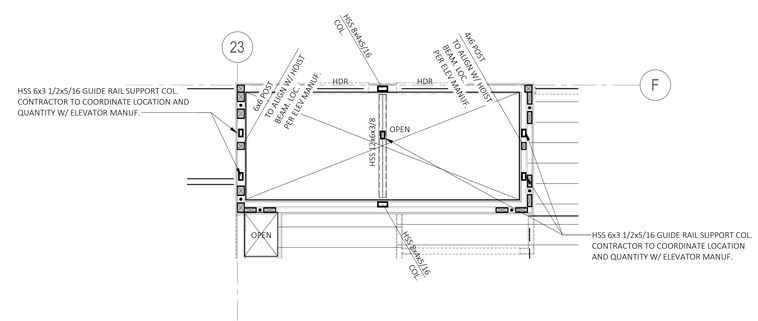

4 ELEVATOR FRAMING PLAN
LEVEL 4

1/4" = 1'-0"

12/7/2022 5:04:42 PM

PYATOK
1611 TELEGRAPH AVE.
SUITE 200
OAKLAND, CA 94612
T. 510.465.7010 | F. 510.465.8575
www.pyatok.com

element
structural engineers, inc.
39675 Cedar Blvd., Suite 295C
Newark, California 94560
Tel: 510.573.1557
eFax: 973.924.0663
www.elementse.com

Owner

2700 INTERNATIONAL

OAKLAND, CA 94601

STAMP:

REGISTERED PROFESSIONAL ENGINEER TRUY N. FONTELERA S 5536 STRUCTURAL STATE OF CALIFORNIA

SIGNED DATE: 12/09/2022

ISSUE SCHEDULE

NO.	ISSUE	DATE
	100% SD	5/11/2022
	50% DD	7/15/2022
	100% DD	9/16/2022
	50% CD	11/18/2022
	PERMIT SET	12/09/2022

REVISION SCHEDULE

NO.	ISSUE	DATE

JOB NUMBER:	ESE# 3395
DRAWN BY:	YL/BDT
CHECKED BY:	JTE
ISSUE DATE:	12/09/2022
SCALE:	1/4" = 1'-0"

TITLE:

ELEVATOR FRAMING PLANS

SHEET:

S4.06

PRELIMINARY - Not for Construction -

© 2019 PYATOK ARCHITECTURE & URBAN DESIGN

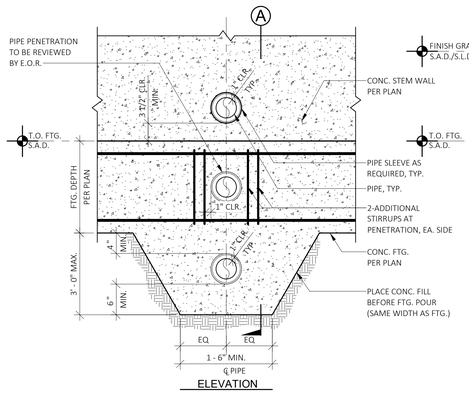

9 TYPICAL PIPE PENETRATION

05-100-06

1" = 1'-0"

TABLE 1A - STANDARD REINFORCING STEEL HOOKS

BAR SIZE	D (IN.)	STANDARD HOOK LENGTH (INCHES)		
		180°		90°
		A or G	J	A or G
#3	2 1/4	5	3	6
#4	3	6	4	8
#5	3 3/4	7	5	10
#6	4 1/2	8	6	12
#7	5 1/4	10	7	14
#8	6	11	8	16

NOTES:
d = BAR DIAMETER
D = 6d FOR #3 THROUGH #8

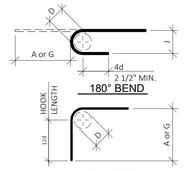

TABLE 1B - TYPICAL STIRRUP AND TIE HOOKS

BAR SIZE	D (IN.)	STIRRUP HOOK LENGTH (INCHES)		
		90°	135°	
		A or G	A or G	Happrox.
#3	1 1/2	4	4	2 1/2
#4	2	4 1/2	4 1/2	3
#5	2 1/2	6	5 1/2	3 3/4
#6	4 1/2	12	8	4 1/2
#7	5 1/4	14	9	5 1/4
#8	6	16	10 1/2	6

NOTES:
d = BAR DIAMETER
D = 4d FOR #3 THROUGH #5 AND 12d FOR #6 THROUGH #8

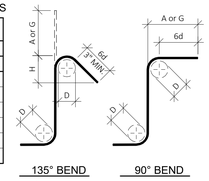

1 STANDARD HOOKS, STIRRUPS, AND TIES

05-100-01

N.T.S.

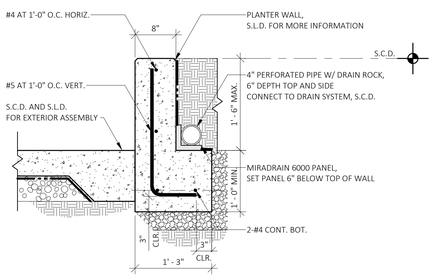

14 SITE PLANTER WALL

1" = 1'-0"

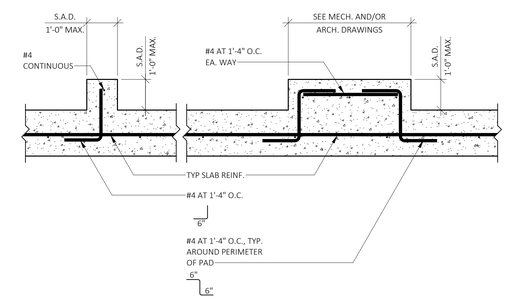

10 TYPICAL CURB AND RAISED PAD

05-100-10

N.T.S.

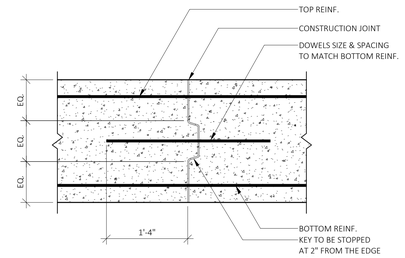

6 TYPICAL CONSTRUCTION JOINT AT FOUNDATION

05-100-05

1" = 1'-0"

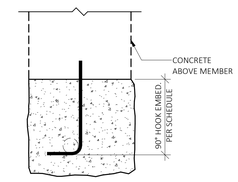

90° HOOK EMBEDMENT FOR GRADE 60 REINFORCING

f'c	2,500 PSI	3,000 PSI	4,000 PSI	5,000 PSI
BAR SIZE	EMBED. (IN.)	EMBED. (IN.)	EMBED. (IN.)	EMBED. (IN.)
#3	9	9	8	7
#4	12	11	10	9
#5	15	14	12	11
#6	18	17	15	13
#7	21	20	17	15
#8	24	22	19	17

NOTE:
TOP BARS = HORIZONTAL BARS (OTHER THAN IN WALLS) PLACED WITH MORE THAN 1'-0" OF FRESH CONCRETE IS CAST BELOW THEM.

2 TYPICAL REINFORCEMENT EMBED

05-100-02

N.T.S.

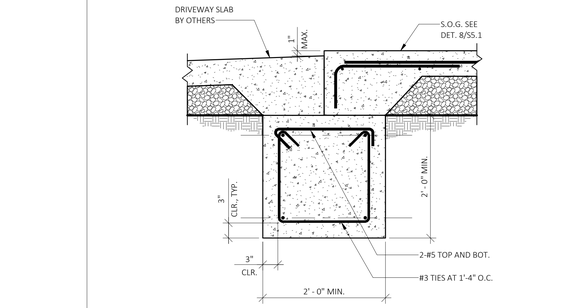

15 TIE BEAM AT GARAGE WALL

1" = 1'-0"

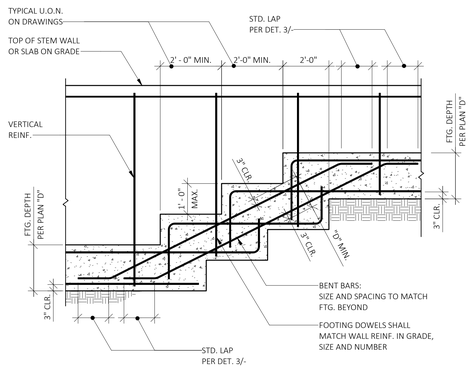

11 TYPICAL STEP IN CONTINUOUS FOOTING

05-100-11

1/2" = 1'-0"

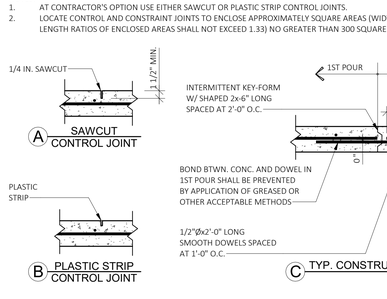

7 TYPICAL CONSTRUCTION JOINT AT SLAB ON GRADE

05-100-07

1" = 1'-0"

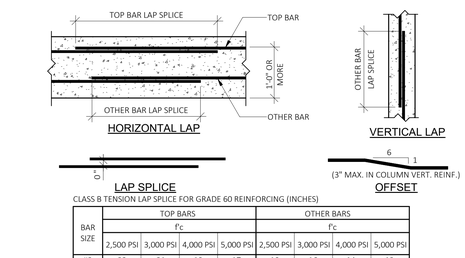

CLASS B TENSION LAP SPLICE FOR GRADE 60 REINFORCING (INCHES)

BAR SIZE	TOP BARS				OTHER BARS			
	f'c				f'c			
	2,500 PSI	3,000 PSI	4,000 PSI	5,000 PSI	2,500 PSI	3,000 PSI	4,000 PSI	5,000 PSI
#3	23	21	18	17	18	16	14	13
#4	31	28	24	22	24	22	19	17
#5	38	35	31	27	30	27	24	21
#6	46	42	37	33	36	32	28	25
#7	67	61	53	48	52	47	41	37
#8	76	70	61	54	59	54	47	42

NOTES:
1. TOP BARS = HORIZONTAL BARS (OTHER THAN IN WALLS) PLACED WITH MORE THAN 1'-0" OF FRESH CONCRETE CAST BELOW THEM.
2. ABOVE TABLES ARE BASED UPON MINIMUM CLEAR COVER GREATER THAN 1.5db AND MINIMUM CLEAR SPACING GREATER THAN 4db. WHERE EITHER OF THESE REQUIREMENTS IS NOT MET, INCREASE THE LAP LENGTH BY 33%.
3. USE CLASS B LAP SPLICE FOR ALL BAR SPLICES TYPICAL

3 TYPICAL REINFORCEMENT LAP SPLICE

05-100-03

N.T.S.

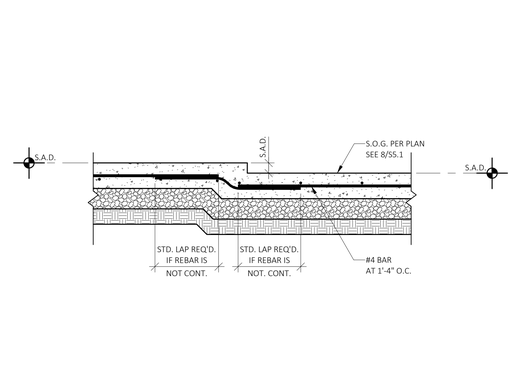

12 STEP IN SLAB-ON-GRADE

05-101-08

1" = 1'-0"

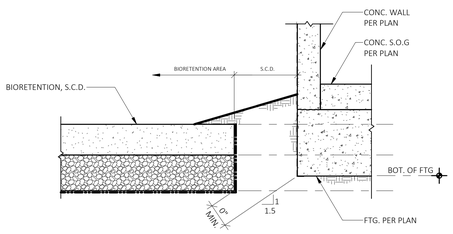

NOTE:
1. STEP FOOTING AS NEEDED PER DET. 10/S5.01.
2. FOR INFO. NOT NOTED, SEE DET. 2/S5.02.
3. SEE DET CIVIL DRAWINGS FOR MORE INFO.
4. REBAR NOT SHOWN FOR CLARITY.

16 FOOTING ADJACENT TO BORETENION AREA

1/2" = 1'-0"

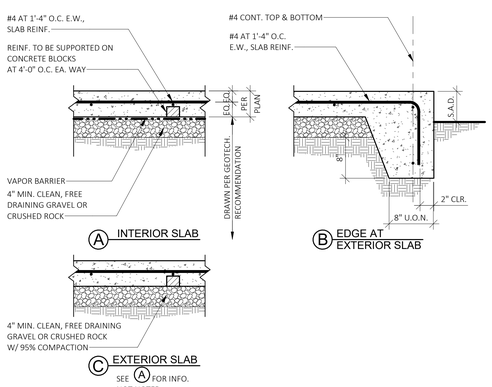

8 SLAB-ON-GRADE

05-100-08

1" = 1'-0"

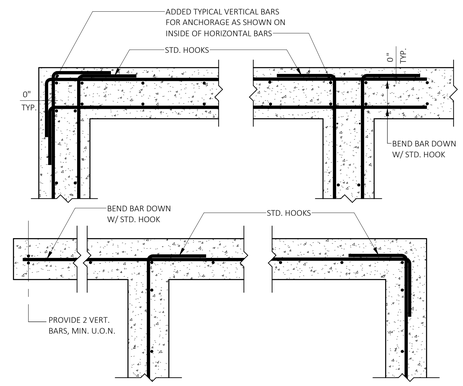

4 TYPICAL CONCRETE MEMBER AT INTERSECTIONS - PLAN VIEW

05-100-04

N.T.S.

PYATOK
1611 TELEGRAPH AVE.
SUITE 200
OAKLAND, CA 94612
T. 510.465.7010 | F. 510.465.8575
www.pyatok.com

element structural engineers, inc.
39675 Cedar Blvd., Suite 295C
Newark, California 94560
Tel: 510.573.1557
eFax: 973.924.0663
www.elementse.com

Owner

2700 INTERNATIONAL
OAKLAND, CA 94601

STAMP:

REGISTERED PROFESSIONAL ENGINEER — TROY N. FONTELERA — S 5536 — STRUCTURAL — STATE OF CALIFORNIA

SIGNED DATE: 12/09/2022

ISSUE SCHEDULE

NO.	ISSUE	DATE
	100% SD	5/11/2022
	50% DD	7/15/2022
	100% DD	9/16/2022
	50% CD	11/18/2022
	PERMIT SET	12/09/2022

REVISION SCHEDULE

NO.	ISSUE	DATE

JOB NUMBER:	ESE# 3395
DRAWN BY:	YL/BDT
CHECKED BY:	JTE
ISSUE DATE:	12/09/2022
SCALE:	As indicated

TITLE:
CONCRETE DETAILS

SHEET:
S5.01

PRELIMINARY - Not for Construction -

© 2019 PYATOK ARCHITECTURE & URBAN DESIGN

12/7/2022 5:04:45 PM

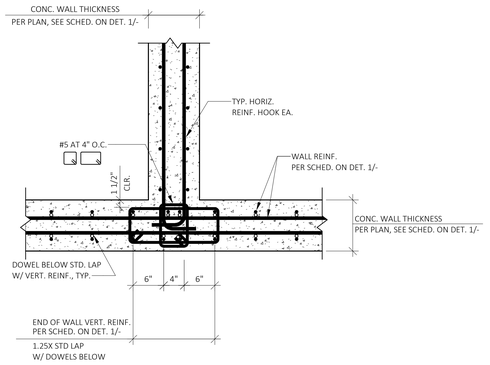

13 CONCRETE SHEAR WALL INTERSECTION - TYPICAL

1" = 1'-0"

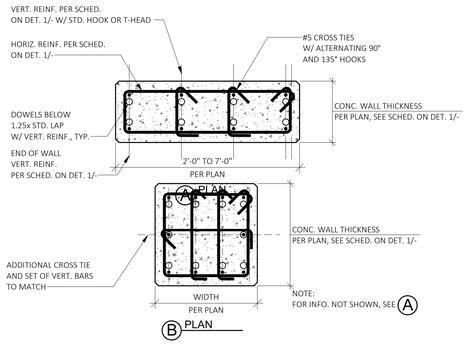

9 WALL PIER SECTION

N.T.S.

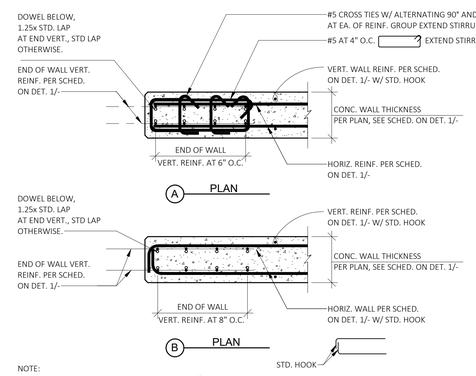

NOTE:
ON INTERSECTING CONC. SHEARWALL, SEE DET. 9/-.

5 TYPICAL WALL END

05-301-15

N.T.S.

MARK	WALL THICKNESS	REINFORCEMENT			
		VERT.	HORIZ.	SLAB DOWELS AT TOP OF WALL	END VERT./ BOUNDARY
WP1	10"	#5 AT 9" O.C. E.F.	S1 = #4 TIES AT 4" O.C. S2 = #4 TIES AT 4" O.C Lo = 1'-4"	-	TIE ALL VERT. BARS PER 9A SEE 14/S5.03 FOR TIE EXTENTS
WP2	12"	#6 AT 9" O.C. E.F.	S1 = #4 TIES AT 4" O.C. S2 = #4 TIES AT 4" O.C Lo = 3'-0"	-	TIE ALL VERT. BARS PER 9A SEE 14/S5.03 FOR TIE EXTENTS
WP3	20"	#8 AT 9" O.C. E.F.	S1 = #5 TIES AT 4" O.C. S2 = #5 TIES AT 4" O.C Lo = 3'-0"	-	TIE ALL VERT. BARS PER 9B SEE 14/S5.03 FOR TIE EXTENTS
WP4	12"	#6 AT 9" O.C. E.F.	S1 = #4 TIES AT 4" O.C. S2 = #4 TIES AT 4" O.C	-	TIE ALL VERT. BARS PER 9A SEE 14/S5.03 FOR TIE EXTENTS
W1	10"	#5 AT 12" O.C. E.F.	#5 AT 12" O.C. E.F.	#5 AT 12" O.C. E.F.	4-#8 END VERT. PER DET. 5B
W2	12"	#5 AT 12" O.C. E.F.	#5 AT 12" O.C. E.F.	#5 AT 12" O.C. E.F.	4-#8 END VERT. PER DET. 5B
W3	12"	#7 AT 12" O.C. E.F.	#5 AT 12" O.C. E.F.	#5 AT 12" O.C. E.F.	12"x28" BE W/ 12-#8 VERT. PER DET. 5A EXTEND BOUNDRY STIRRUPS FULL HEIGHT AND MIN. 1'-0" INTO FOOTINGS.

1 CONCRETE SHEAR WALL SCHEDULE

N.T.S.

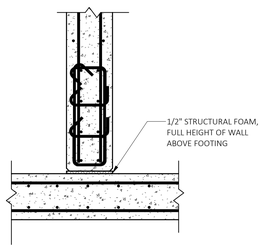

NOTE:
FOR INFO NOT SHOWN, SEE DET. 5/-.

14 CONCRETE SHEAR WALL INTERSECTION -DETACHED

1" = 1'-0"

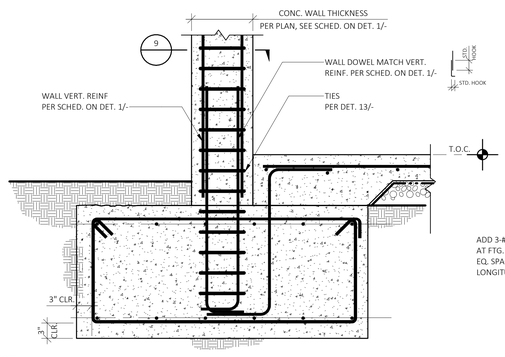

NOTE:
FOR INFO NOT NOTED, SEE DET. 2/-.

10 WALL PIER AT CONCENTRIC SPREAD FOOTING

1" = 1'-0"

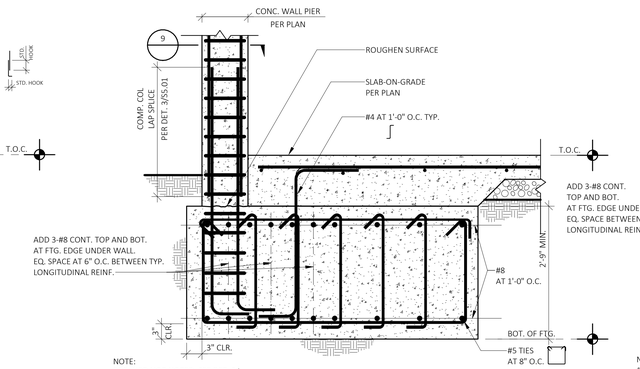

NOTE:
FOR INFO NOT NOTED, SEE DET. 2/-.

6 WALL PIER AT ECCENTRIC FOOTING

1" = 1'-0"

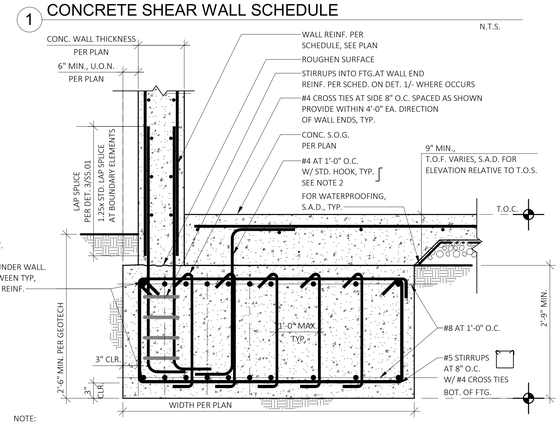

NOTE:
1. FOOTING REINF. TO BE EQUALLY SPACED, U.O.N.
2. OMIT AT GARAGE AND PROVIDE 1/2" THICK EXPANSION MATERIAL BETWEEN WALL AND SLAB

2 EXTERIOR CONC. SHEARWALL AT ECCENTRIC FOOTING

1" = 1'-0"

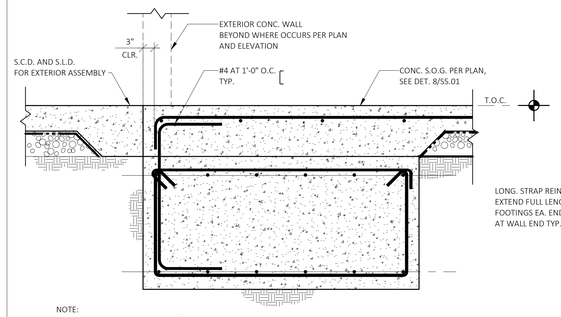

NOTE:
FOR INFO NOT NOTED, SEE DET. 2/-.

15 GRADE BEAM AT THRESHHOLD

1" = 1'-0"

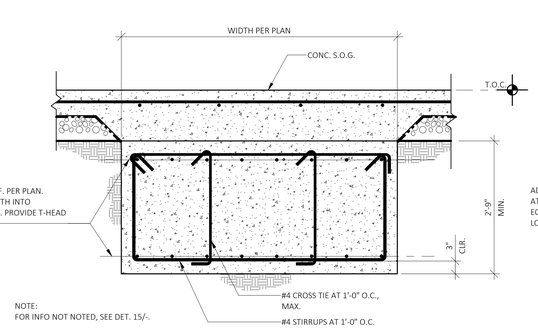

NOTE:
FOR INFO NOT NOTED, SEE DET. 15/-.

11 GRADE BEAM AT THRESHHOLD

1" = 1'-0"

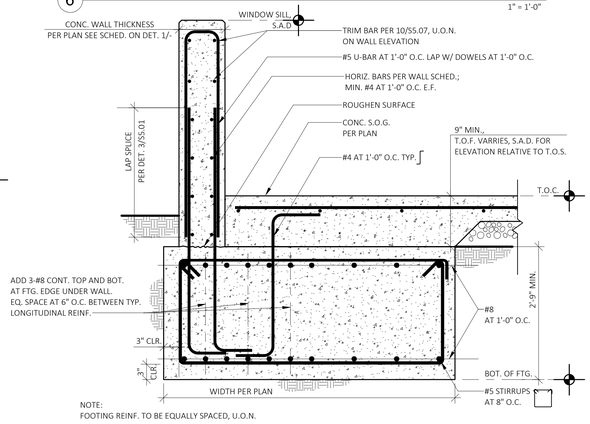

NOTE:
FOOTING REINF. TO BE EQUALLY SPACED, U.O.N.

7 WINDOW SILL AT EXTERIOR CONC. WALL

1" = 1'-0"

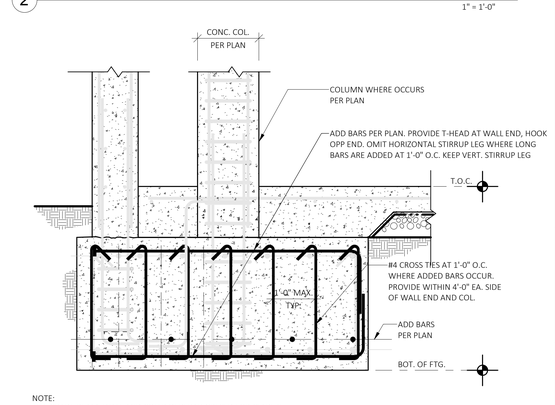

NOTE:
TYP. GRADE BEAM, WALL AND COLUMN REBAR GREYED FOR CLARITY.
FOR INFO NOT SHOWN SEE DET. 2/S5.02, 2/S5.03 AND 3/S5.03.

3 COLUMN AND SHEARWALL FOUNDATION - INTEGRAL

1" = 1'-0"

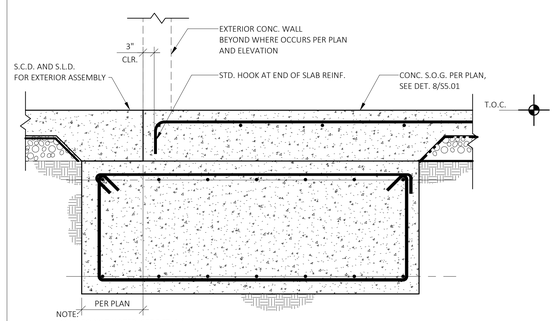

NOTE:
FOR INFO NOT NOTED, SEE DET. 2/-.

16 GRADE BEAM AT GARAGE OPENING

1" = 1'-0"

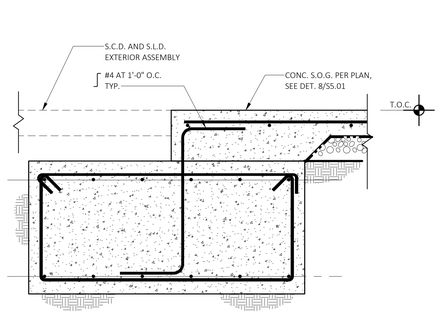

NOTE:
FOR INFO NOT NOTED, SEE DET. 2/-.

12 CONCRETE GRADE BEAM AT OPENING IN WALL

1" = 1'-0"

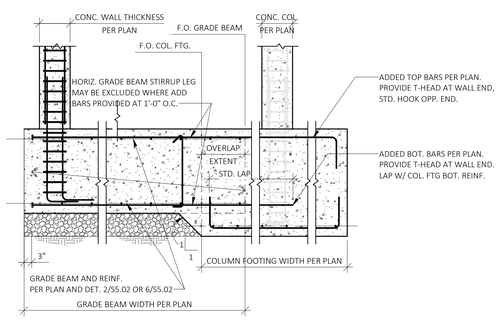

NOTE:
1. TYP. GRADE BEAM , WALL AND COLUMN REBAR GREYED OUT FOR CLARITY.
2. FOR INFO. NOT SHOWN, SEE DET 2/S5.02, 2/S5.03, AND 3/S5.03

8 COLUMN AND SHEARWALL FOUNDATION - OVERLAPPED

N.T.S.

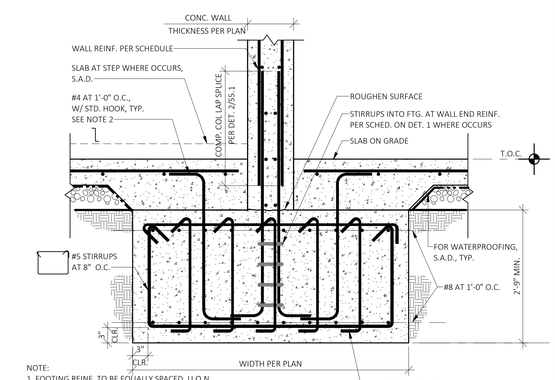

NOTE:
1. FOOTING REINF. TO BE EQUALLY SPACED, U.O.N.
2. OMIT AT GARAGE AND PROVIDE 1/2" THICK EXPANSION MATERIAL BETWEEN WALL AND SLAB.

4 TYPICAL INTERIOR CONCRETE SHEAR WALL AT SPREAD FOOTING

1" = 1'-0"

PYATOK
1611 TELEGRAPH AVE.
SUITE 200
OAKLAND, CA 94612
T. 510.465.7010 | F. 510.465.8575
www.pyatok.com

element
structural engineers, inc.
39675 Cedar Blvd., Suite 295C
Newark, California 94560
Tel: 510.573.1557
eFax: 973.924.0663
www.elementse.com

Owner

2700 INTERNATIONAL

OAKLAND, CA 94601

STAMP:

REGISTERED PROFESSIONAL ENGINEER
THOI N. FONTELERA
S 5536
STRUCTURAL

SIGNED DATE: 12/09/2022

ISSUE SCHEDULE

NO.	ISSUE	DATE
	100% SD	5/11/2022
	50% DD	7/15/2022
	100% DD	9/16/2022
	50% CD	11/18/2022
	PERMIT SET	12/09/2022

REVISION SCHEDULE

NO.	ISSUE	DATE

JOB NUMBER:	ESE# 3395
DRAWN BY:	YL/BDT
CHECKED BY:	JTE
ISSUE DATE:	12/09/2022
SCALE:	As indicated

TITLE:

CONCRETE DETAILS

SHEET:

S5.02

PRELIMINARY - Not for Construction -

© 2019 PYATOK ARCHITECTURE & URBAN DESIGN

12/7/2022 5:04:54 PM

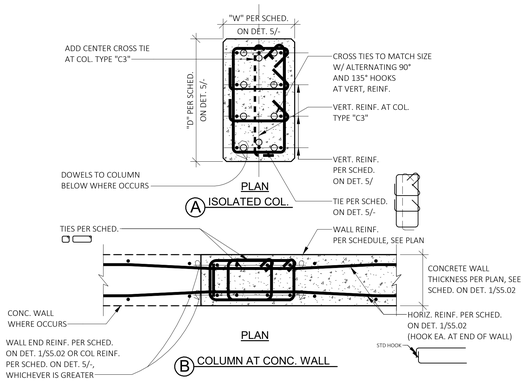

13 COLUMN SECTION

N.T.S.

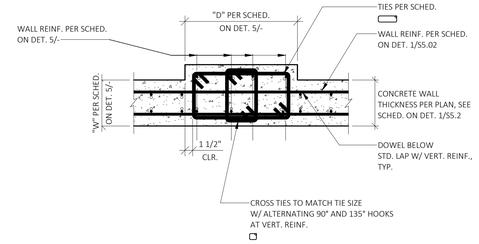

9 COLUMN SECTION

N.T.S.

CONCRETE COLUMN SCHEDULE				
MARK	WIDTH (W) (IN)	DEPTH (D) (IN)	VERT. REINF.	TIE SIZE AND SPACING
C1	14	22	8-#8 REINF.	S1 = #5 AT 3 1/2" O.C. S2 = #5 AT 6" O.C. Lo = 30"
C2	14	30	12-#8 REINF.	S1 = #5 AT 3 1/2" O.C. S2 = #5 AT 6" O.C. Lo = 30"
C3	16	24	10-#8 REINF.	S1 = #5 AT 4" O.C. S2 = #5 AT 6" O.C. Lo = 30"
C4	16	30	12-#8 REINF.	S1 = #5 AT 4" O.C. S2 = #5 AT 6" O.C. Lo = 30"

NOTE:
SEE DET. 12/-, 13/- AND 14/- FOR TIE CONFIGURATION.

5 COLUMN SCHEDULE

N.T.S.

COLUMN FOOTING SCHEDULE				
MARK	WIDTH "W"	LENGTH "L"	DEPTH "D"	REINF.
F10	10'-0"	10'-0"	3'-0"	11-#8 BOT. E.W.
F14	14'-0"	14'-0"	3'-6"	16-#9 BOT. E.W.
F16	16'-0"	16'-0"	4'-0"	17-#9 BOT. E.W.

1 COLUMN FOOTING SCHEDULE

1" = 1'-0"

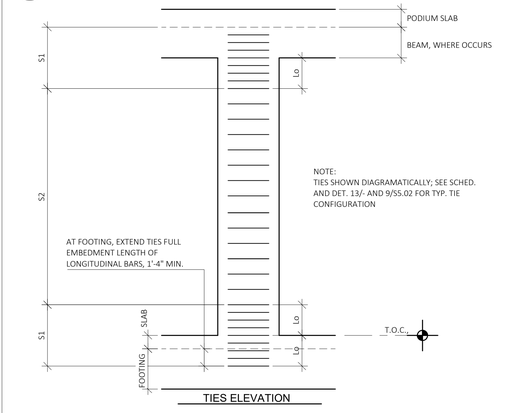

14 COLUMN AND WALL PIER TIE SPACING

N.T.S.

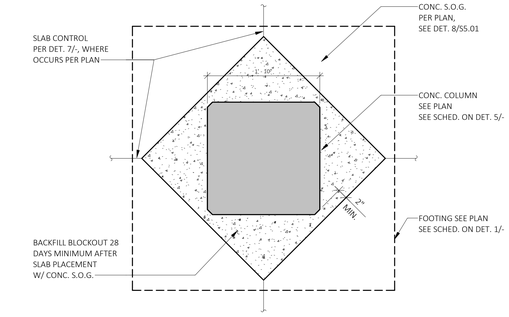

6 CONCRETE BLOCKOUT FOR COLUMN POURED AFTER CONCRETE S.O.G.

1" = 1'-0"

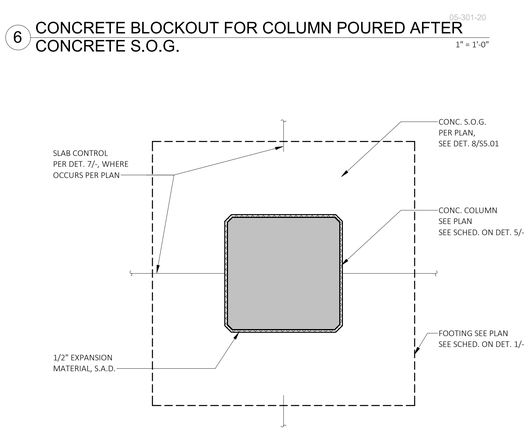

7 CONCRETE BLOCKOUT FOR COLUMN POURED AFTER CONCRETE S.O.G.

1" = 1'-0"

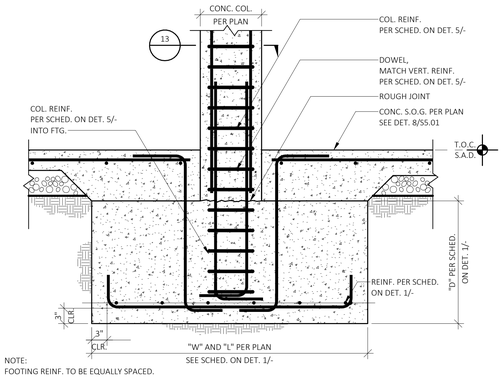

NOTE:
FOOTING REINF. TO BE EQUALLY SPACED.

2 CONCRETE COLUMN AT SPREAD FOOTING

1" = 1'-0"

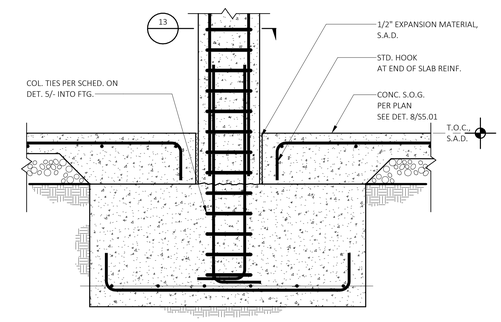

NOTE:
FOR INFO. NOT NOTED, DET. 2/-.

3 CONCRETE COLUMN AT SPREAD FOOTING AT GARAGE

1" = 1'-0"

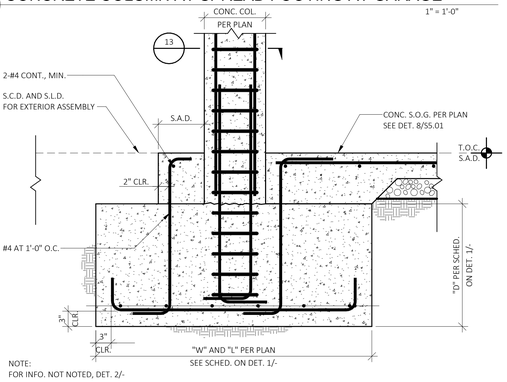

NOTE:
FOR INFO. NOT NOTED, DET. 2/-

4 CONCRETE COLUMN AT SPREAD FOOTING AT PERIMETER

1" = 1'-0"

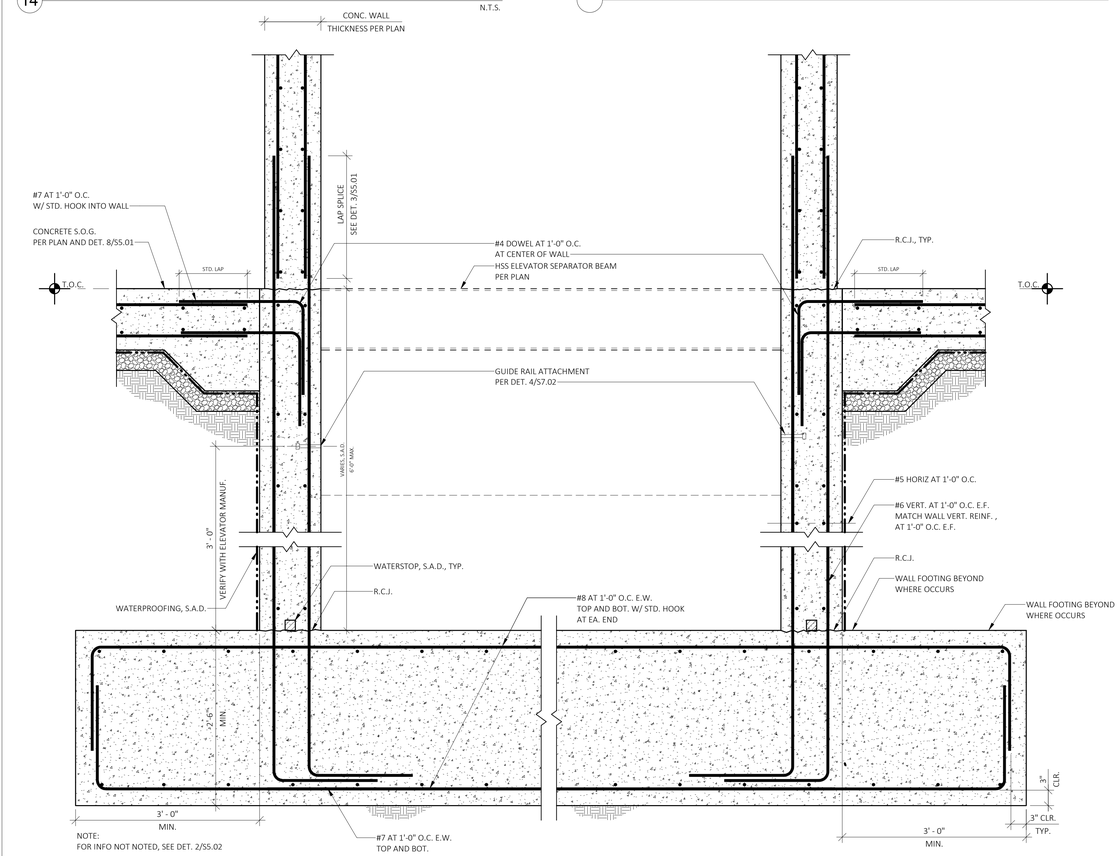

NOTE:
FOR INFO NOT NOTED, SEE DET. 2/S5.02

16 PIT AT ELEVATOR

1" = 1'-0"

PYATOK
1611 TELEGRAPH AVE.
SUITE 200
OAKLAND, CA 94612
T. 510.465.7010 | F. 510.465.8575
www.pyatok.com

element structural engineers, inc.
39675 Cedar Blvd., Suite 295C
Newark, California 94560
Tel: 510.573.1557
eFax: 973.924.0663
www.elementse.com

Owner

2700 INTERNATIONAL

OAKLAND, CA 94601

STAMP:

REGISTERED PROFESSIONAL ENGINEER — THUC N. FONTECHA — S 5536 — STRUCTURAL — STATE OF CALIFORNIA

SIGNED DATE: 12/09/2022

ISSUE SCHEDULE

NO.	ISSUE	DATE
	100% SD	5/11/2022
	50% DD	7/15/2022
	100% DD	9/16/2022
	50% CD	11/18/2022
	PERMIT SET	12/09/2022

REVISION SCHEDULE

NO.	ISSUE	DATE

JOB NUMBER:	ESE# 3395
DRAWN BY:	YL/BDT
CHECKED BY:	JTE
ISSUE DATE:	12/09/2022
SCALE:	As indicated

TITLE:

CONCRETE DETAILS

SHEET:

S5.03

PRELIMINARY - Not for Construction -

© 2019 PYATOK ARCHITECTURE & URBAN DESIGN

12/7/2022 5:04:59 PM

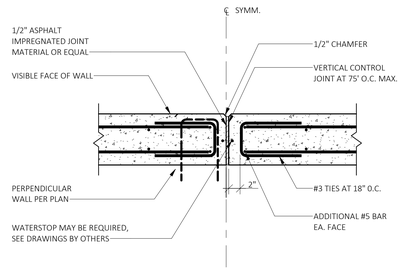

13 VERTICAL WALL JOINT 05-303-10

1" = 1'-0"

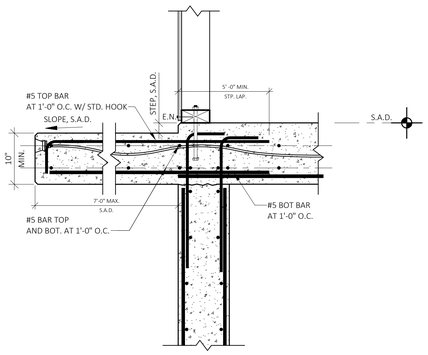

9 CONC. P.T. EXTENSION FROM WALL

1" = 1'-0"

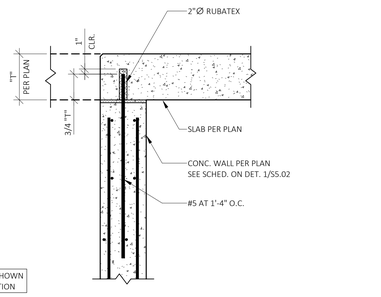

P/T TENDONS NOT SHOWN SEE PLAN FOR LOCATION

5 LOAD BEARING CONCRETE WITH NO SHEAR TRANSFER

1" = 1'-0"

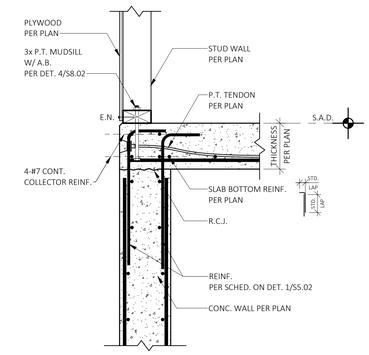

1 CONCRETE SHEAR WALL TO SLAB

1" = 1'-0"

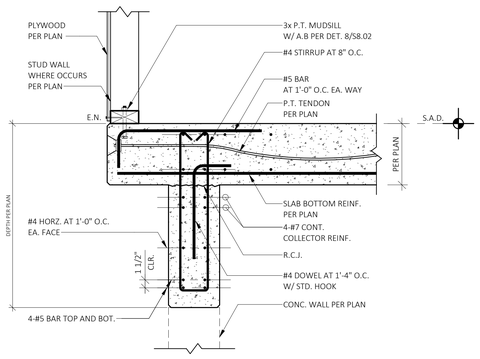

14 DROPPED CONC. BEAM AT CANTILEVER WALL

1" = 1'-0"

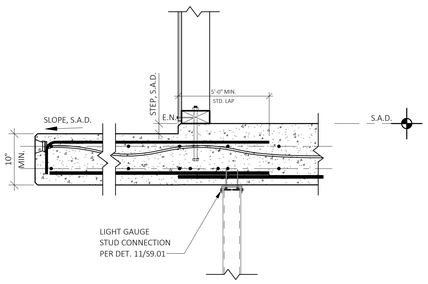

10 CONC. P.T. EXTENSION FROM WALL

1" = 1'-0"

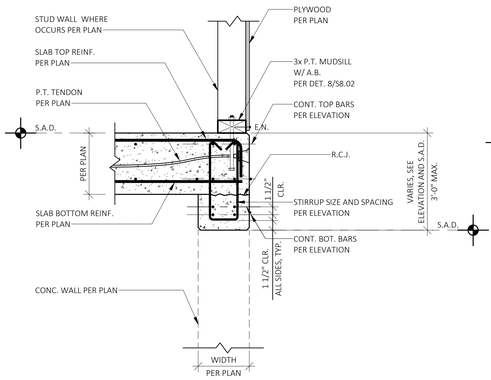

6 CONCRETE BEAM SLAB EDGE - SHALLOW

1" = 1'-0"

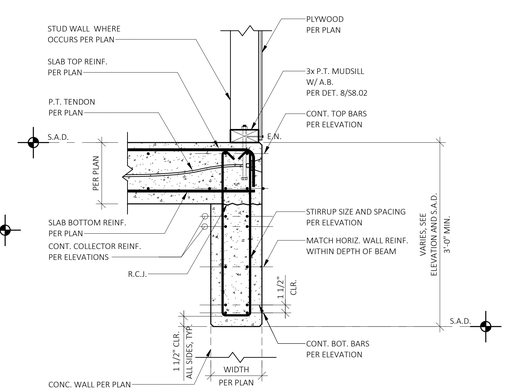

2 CONCRETE BEAM SLAB EDGE - DEEP

1" = 1'-0"

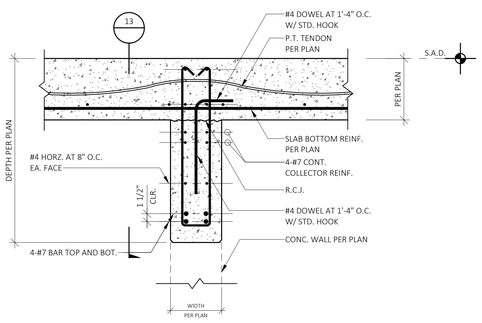

15 DROPPED CONC. BEAM W/O WALL ABOVE WALL

1" = 1'-0"

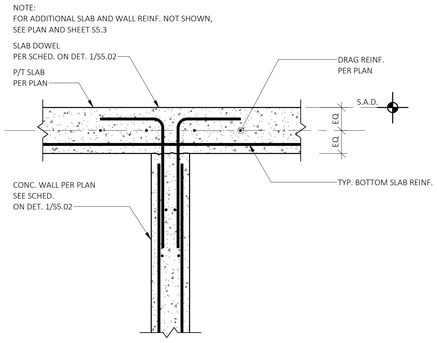

7 DRAG REINF. DETAIL

1" = 1'-0"

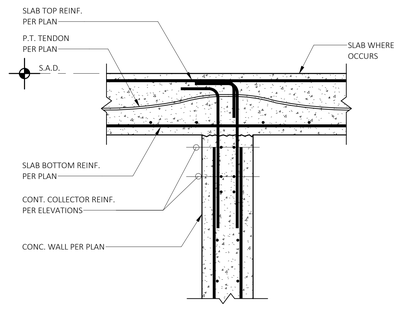

NOTE:
FOR INFO. NOT NOTED, SEE DET. 1/-.

3 CONCRETE SHEAR WALL TO SLAB 05-501-53

1" = 1'-0"

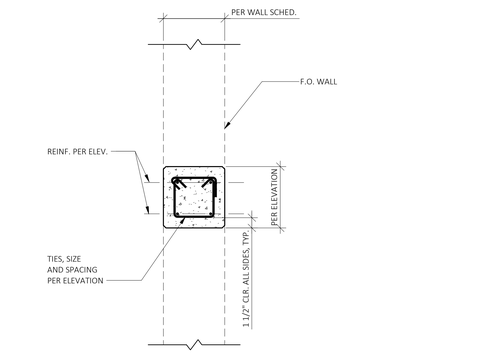

16 CONCRETE EXTERIOR HEADER BEAM

1" = 1'-0"

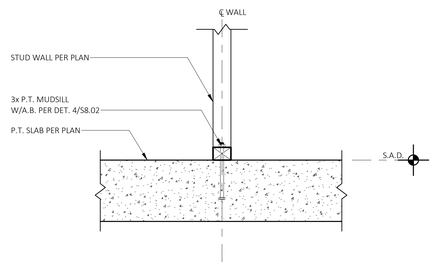

P/T TENDONS AND OTHER SLAB REINFORCING NOT SHOWN FOR CLARITY.

12 NON-SHEAR NON-BEARING WALL AT P.T. SLAB

1" = 1'-0"

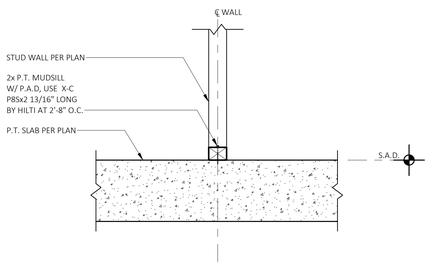

P/T TENDONS AND OTHER SLAB REINFORCING NOT SHOWN FOR CLARITY.

8 NON-SHEAR NON-BEARING WALL AT P.T. SLAB

1" = 1'-0"

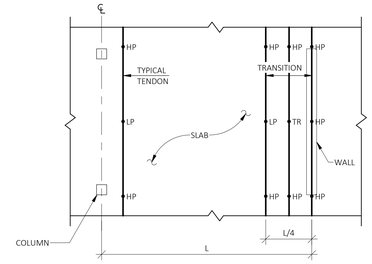

NOTE:
HP = HIGH POINT TENDON
LP = LOW POINT TENDON
TR = TRANSITION BETWEEN HIGH POINT AND LOW POINT

4 PLACEMENT OF UNIFORM TENDON ADJACENT TO WALLS 05-501-45

N.T.S.

12/7/2022 5:05:05 PM

PYATOK
1611 TELEGRAPH AVE.
SUITE 200
OAKLAND, CA 94612
T. 510.465.7010 | F. 510.465.8575
www.pyatok.com

element structural engineers, inc.
39675 Cedar Blvd., Suite 295C
Newark, California 94560
Tel: 510.573.1557
eFax: 973.924.0663
www.elementse.com

Owner

2700 INTERNATIONAL
OAKLAND, CA 94601

STAMP:
REGISTERED PROFESSIONAL ENGINEER TROY N. FONTELERA S 5536 STRUCTURAL
SIGNED DATE: 12/09/2022

ISSUE SCHEDULE

NO.	ISSUE	DATE
	100% SD	5/11/2022
	50% DD	7/15/2022
	100% DD	9/16/2022
	50% CD	11/18/2022
	PERMIT SET	12/09/2022

REVISION SCHEDULE

NO.	ISSUE	DATE

JOB NUMBER:	ESE# 3395
DRAWN BY:	YL/BDT
CHECKED BY:	JTE
ISSUE DATE:	12/09/2022
SCALE:	1" = 1'-0"

TITLE:
CONCRETE DETAILS

SHEET:
S5.04

PRELIMINARY - Not for Construction -

© 2019 PYATOK ARCHITECTURE & URBAN DESIGN

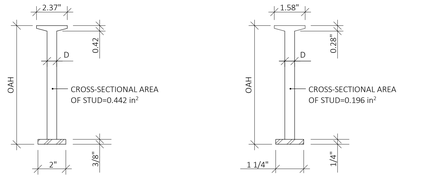

NOTE: SEE DETAIL 8, 9, 10 AND 11 THIS SHEET FOR STUD RAIL INFO. AND LAYOUT.

STUDRAIL ID	# OF STUDRAIL	# OF STUDS	STUD DIA. (IN.)	S (IN.)	S_O (IN.)	OAH (IN.)	STUD RAIL LAYOUT
SR1	8	10	1/2"	1.75	1.75	10	15A/-
SR2	6	30	1/2"	1.25	1.25	10	15B/-

NOTES:
1. SHEAR REINFORCEMENT AT THE SLAB COLUMN CONNECTION, AS SHOWN ON THE DRAWINGS AND DETAILS, SHALL BE STUDRAILS AS MANUFACTURED BY DECON (800-975-6990).
2. THE SHEAR STUDS USED IN THE FABRICATION OF STUDRAILS SHALL BE LOW CARBON STEEL, GRADE C1015 TO C1018 , IN ACCORDANCE WITH ASTM-A108. THE STRENGTH AND DUCTILITY REQUIREMENTS ARE:

   YIELD STRENGTH:.....50,000 PSI MINIMUM
   TENSILE STRENGTH:.....60,000 PSI MINIMUM
   ELONGATION IN 2":.....20% MINIMUM
   REDUCTION OF AREA:.....50% MINIMUM
3. THE RAILS USED IN STUDRAILS SHALL BE LOW CARBON STEEL TYPE 44W. THE STUDS SHALL BE WELDED IN ACCORDANCE WITH AWS D1.1 AND CSA W59 CERTIFIED BY THE CANADIAN WELDING BUREAU.
4. THE COMPLETE AND FINISHED STUDRAIL SHALL BE ICC ES EVALUATED AND WELDING SHALL TAKE PLACE IN AN ICC ES APPROVED AND AUDITED FACILITY.
5. STUDRAILS SHALL CONFORM TO THE LATEST EDITION OF ASTM A1044.
6. PLACEMENT LOCATIONS ARE SHOWN ON FRAMING PLANS, SEE S2.2R AND S2.3R.

NOTE:
SEE 8/- FOR STUD RAIL DETAIL.

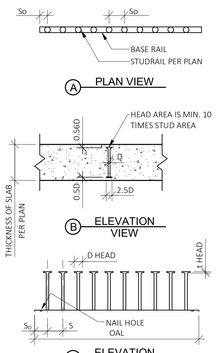

14 STUD RAIL DETAILS 05-501-72 N.T.S.

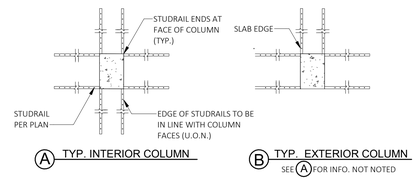

NOTE:
SEE DET.14/- FOR STUDRAIL SCHEDULE.

15 STUD RAIL LAYOUT N.T.S.

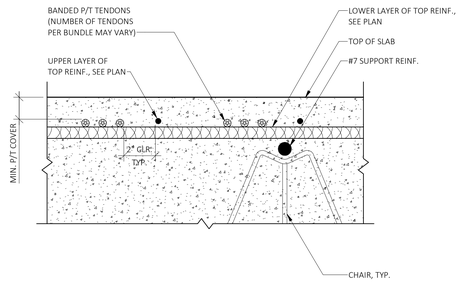

9 SECTION THROUGH BANDED TENDON AT COLUMN 05-501-19 3" = 1'-0"

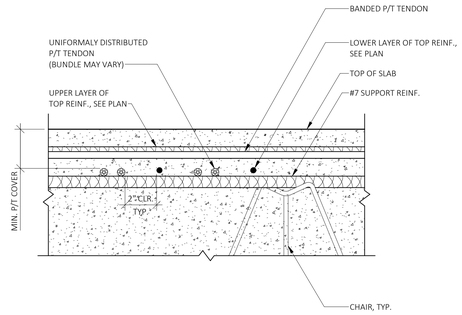

5 SECTION THROUGH DISTRUBUTED TENDON AT COLUMN 05-501-20 3" = 1'-0"

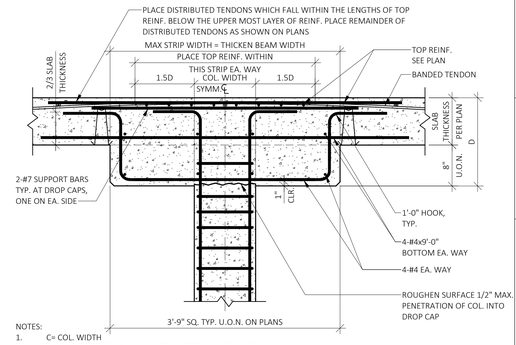

NOTES:
1. C= COL. WIDTH
2. D= SLAB THICKNESS + THICKEN BEAM DEPTH BELOW SLAB
3. TYP. SLAB REINF. NOT SHWON FOR CLARITY.

1 TYPICAL THICKEN BEAM AND CONCRETE COLUMN 05-501-36 1" = 1'-0"

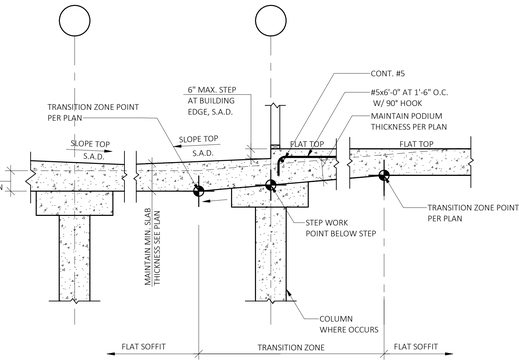

NOTES:
1. LOCATE CONTAIN TOP BARS TO PROVIDE PROPER TENDON PROFILES. FOR PROFILES, SEE PLAN.
2. TYP. SLAB REINF. NOT SHWON FOR CLARITY.

6 THICKEN BEAM AND CONCRETE COLUMN 1" = 1'-0"

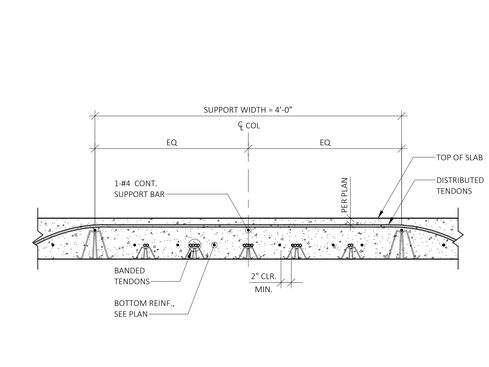

NOTES:
1. REINF. SHOWN ON PLANS DICTATES OVER REINF. SHOWN IN DETAIL.
2. 2 STRANDS MIN. TO PASS OVER COLUMN CENTER IN EACH DIRECTION.

2 TOP REINFORCEMENT PLAN AT INTERIOR COLUMN 05-501-17 N.T.S.

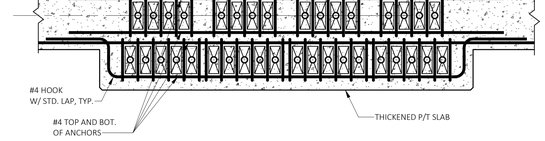

NOTE:
FOR INFO NOT NOTED, SEE DET. 5/S5.06

7 TYP. REINF. OF TENDON BAND AT SLAB EDGE OR INTERMEDIATE STRESSING 1" = 1'-0"

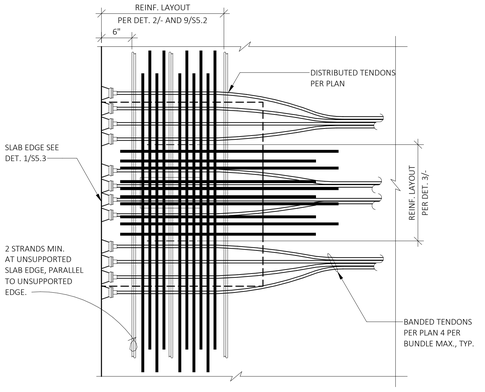

3 TOP REINFORCEMENT PLAN AT EXTERIOR COLUMN 05-501-18 N.T.S.

NOTE:
CONTRACTOR TO SUBMIT PROPOSED SOFFIT WORK-POINT AND TRANSITION ZONE LOCATIONS FOR ARCHITECT AND ENGINEER REVIEW.

8 SLAB STEP AT TERRANCE N.T.S.

4 BANDED TENDONS AT MID-SPAN 05-501-21 1" = 1'-0"

PYATOK
1611 TELEGRAPH AVE.
SUITE 200
OAKLAND, CA 94612
T. 510.465.7010 | F. 510.465.8575
www.pyatok.com

element
structural engineers, inc.
39675 Cedar Blvd., Suite 295C
Newark, California 94560
Tel: 510.573.1557
eFax: 973.924.0663
www.elementse.com

Owner

2700 INTERNATIONAL
OAKLAND, CA 94601

STAMP:
REGISTERED PROFESSIONAL ENGINEER
TRUE N. FONTELERA
S 5536
STRUCTURAL
STATE OF CALIFORNIA
SIGNED DATE: 12/09/2022

ISSUE SCHEDULE

NO.	ISSUE	DATE
	100% SD	5/11/2022
	50% DD	7/15/2022
	100% DD	9/16/2022
	50% CD	11/18/2022
	PERMIT SET	12/09/2022

REVISION SCHEDULE

NO.	ISSUE	DATE

JOB NUMBER:	ESE# 3395
DRAWN BY:	YL/BDT
CHECKED BY:	JTE
ISSUE DATE:	12/09/2022
SCALE:	As indicated

TITLE:
CONCRETE DETAILS

SHEET:
S5.05

PRELIMINARY - Not for Construction -

© 2019 PYATOK ARCHITECTURE & URBAN DESIGN

12/7/2022 5:05:11 PM

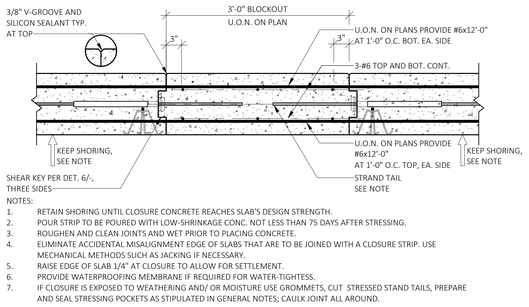

NOTES:
1. RETAIN SHORING UNTIL CLOSURE CONCRETE REACHES SLAB'S DESIGN STRENGTH.
2. POUR STRIP TO BE POURED WITH LOW-SHRINKAGE CONC. NOT LESS THAN 75 DAYS AFTER STRESSING.
3. ROUGHEN AND CLEAN JOINTS AND WET PRIOR TO PLACING CONCRETE.
4. ELIMINATE ACCIDENTAL MISALIGNMENT EDGE OF SLABS THAT ARE TO BE JOINED WITH A CLOSURE STRIP. USE MECHANICAL METHODS SUCH AS JACKING IF NECESSARY.
5. RAISE EDGE OF SLAB 1/4" AT CLOSURE TO ALLOW FOR SETTLEMENT.
6. PROVIDE WATERPROOFING MEMBRANE IF REQUIRED FOR WATER-TIGHTESS.
7. IF CLOSURE IS EXPOSED TO WEATHERING AND/ OR MOISTURE USE GROMMETS, CUT STRESSED STAND TAILS, PREPARE AND SEAL STRESSING POCKETS AS STIPULATED IN GENERAL NOTES; CAULK JOINT ALL AROUND.

13 POUR STRIP

05-501-14
N.T.S.

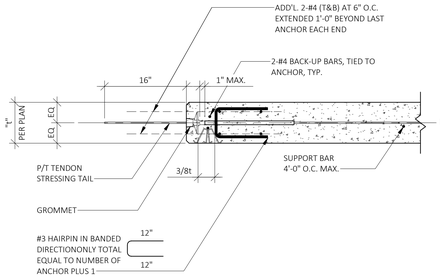

NOTE:
FOR INFO. NOT NOTED, SEE DET. 7/-.

9 STRESSING END AT BANDED TENDONS

05-501-07
1" = 1'-0"

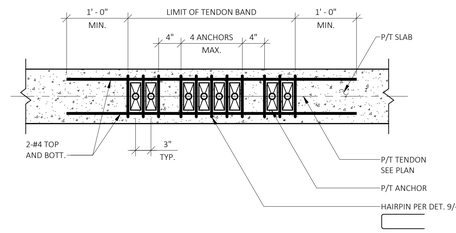

5 TYP. REINF. OF TENDON BAND AT SLAB EDGE OR INTERMEDIATE STRESSING

05-501-04
1" = 1'-0"

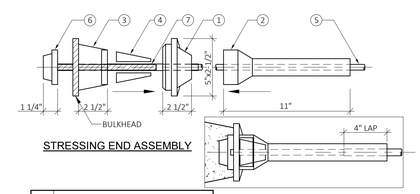

STRESSING END ASSEMBLY

ITEM	DESCRIPTION
1	EPOXY COATED ANCHORAGE
2	TRANSULENT GREASE-FILLED PROTECTION SLEEVE W/ WATERTIGHT SEAL BOTH ENDS
3	TRANSULENT LOCKING GRESE-FILLED END CAP
4	MONOWEDGES
5	STRAND (GREASED AND SHEATHED)
6	TRANSULENT LOCKING GRESE-FILLED END CAP
7	STEEL STRAND

NOTES:
1. LOCATE ANCHOR AT BULKHEAD PER PROJECT PLANS.
2. INSTALL GROMMET FLUSH BETWEEN BULKHEAD AND ANCHOR FOR TIGHT SEAL.
3. OVERLAP BETWEEN SHEATHING AND END OF SLEEVE.
4. FILL SLEEVE COMPLETELY W/ GREASE
5. AFTER POURING. AT TIME OF STRESSING, REMOVE GROMMET AND INSERT WEDGES.
6. AFTER STRESSING, CUT STRAND TO WITHIN 1/8" OF END OF END CAP AND GREASE END CAP PRIOR TO INSERTING IT TIGHT AGAINST ANCHOR.
7. PATCH STRESSING POCKET PER PROJECT PLANS.

1 a

05-501-01
N.T.S.

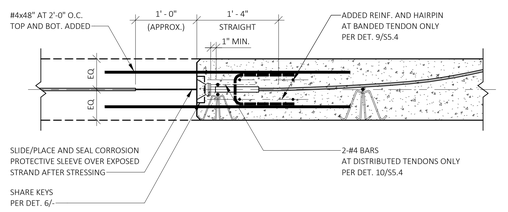

NOTE:
FOR JOINT LOCATION, SEE PLAN.
(JOINT SHALL BE LOCATED CLOSE TO 1/4 OF SPAN)

14 CONSTRUCTION JOINT WITH NO INTERMEDIATE STRESSING

05-501-15
1" = 1'-0"

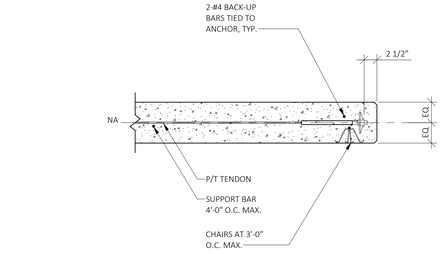

NOTE:
FOR INFO. NOT NOTED, SEE DET. 7/-.

10 STRESSING END AT UNIFORMLY DISTRIBUTED TENDONS

1" = 1'-0"

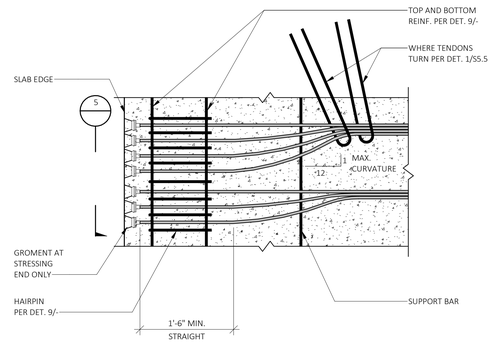

6 FLARING OF BANDED TENDONS

05-501-05
1" = 1'-0"

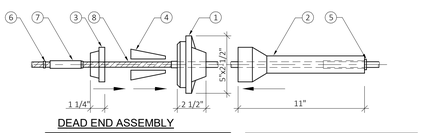

DEAD END ASSEMBLY

ITEM	DESCRIPTION
1	EPOXY COATED ANCHORAGE
2	TRANSULENT GREASE-FILLED PROTECTION SLEEVE W/ WATERTIGHT SEAL BOTH ENDS
3	TRANSULENT LOCKING GRESE-FILLED END CAP
4	MONOWEDGES
5	STRAND (GREASED AND SHEATHED)
6	STEEL STRAND

NOTES:
1. LOCATE ANCHOR AT BULKHEAD PER PROJECT PLANS
2. IF FABRICATED AT SHOP, WEDGES, GREASE CAP, AND SLEEVE WILL BE ASSEMBLED TIGHT TO ANCHOR. IF FIELD SEATING IS REQUIRED, BE SURE ALL
3. COMPONENTS ARE TIGHT TO ANCHOR.
4. VERIFY 4" MIN. OVERLAP BETWEEN SHEATHING AND END OF SLEEVE.
5. VERIFY SLEEVE IS COMPLETELY FILL W/ GREASE.

2 b

05-501-01
N.T.S.

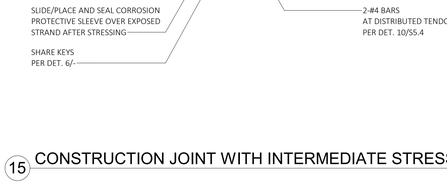

15 CONSTRUCTION JOINT WITH INTERMEDIATE STRESSING

05-501-14
1" = 1'-0"

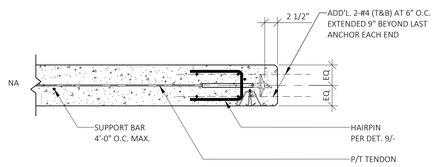

NOTE:
FOR INFO. NOT NOTED, SEE DET. 7/-.

11 DEAD END AT BANDED TENDONS

05-501-09
1" = 1'-0"

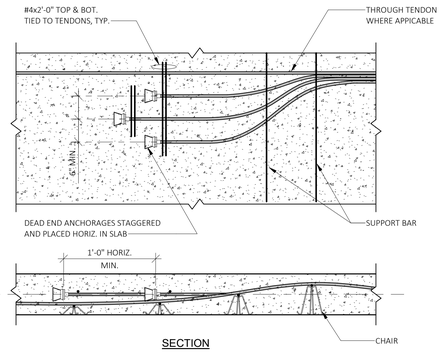

SECTION

7 PLACEMENT OF DISCOUNTING DEAD END TENDONS (NON-SLAB EDGE CONDITION)

05-501-06
N.T.S

DEAD END ASSEMBLY

ITEM	DESCRIPTION
1	INTERMEDIATE STRESS ANCHORAGE
2	TRANSULENT GREASE-FILLED PROTECTION SLEEVE W/ WATERTIGHT SEAL BOTH ENDS
3	INTERMEDIATE CAP AND O-RING
4	STANDARD WEDGES
5	SPLIT RUBBER SEAL TO BE INSTALLED AFTER 12" TUBE HAS BEEN SLID INTO PLACE
6	SPLIT RUBBER SEAL TO BE INSTALLED AFTER 24" TUBE HAS BEED SLID INTO PLACE
7	24" TUBE - NO SEAL
8	STEEL STRAND

NOTES:
1. LOCATE ANCHOR AT BULKHEAD PER PROJECT PLANS
2. IF FABRICATED AT SHOP, WEDGES, GREASE CAP, AND SLEEVE WILL BE ASSEMBLED TIGHT TO ANCHOR. IF FIELD SEATING IS REQUIRED, BE SURE ALL
3. COMPONENTS ARE TIGHT TO ANCHOR.
4. VERIFY 4" MIN. OVERLAP BETWEEN SHEATHING AND END OF SLEEVE.
5. VERIFY SLEEVE IS COMPLETELY FILL W/ GREASE.

3 c

05-501-01
N.T.S.

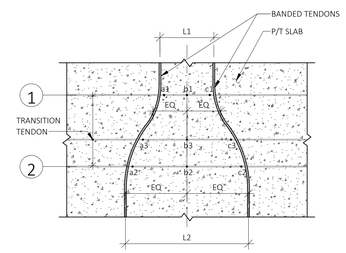

NOTE:
THE SPAN OF THE TRANSITION TENDON CHANGES FROM L1 AT LINE 1 TO L2 AT LINE 2. PLACE TRANSITION TENDON WITH ITS CONTROL POINTS a3, b3, AND c3 VARYING LINEARLY FROM LINE 1 TO LINE 2 BETWEEN THEIR RESPECTIVE VALUES AT LINE 1 AND LINE 2.

16 PLACEMENT OF TENDONS IN SPANS OF VARYING LENGHT

05-501-02
3/4" = 1'-0"

NOTE:
FOR INFO. NOT NOTED, SEE DET. 7/-, 10/- AND 11/-.

12 DEAD END AT UNIFORMLY DISTRIBUTED TENDONS

05-501-10
1" = 1'-0"

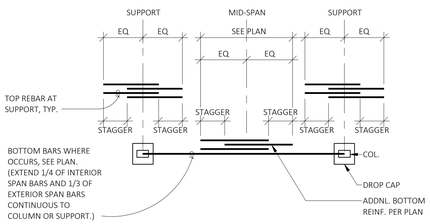

NOTE:
UNLESS OTHERWISE NOTED STAGGER ALL BARS (ALL CONDITION) 12" UNLESS SPACE INSUFFICIENT IN WHICH CASE FIELD ADJUST TO LESS STAGGER.

8 ARRANGEMENT OF BARS IN P/T SLAB

05-501-24
N.T.S

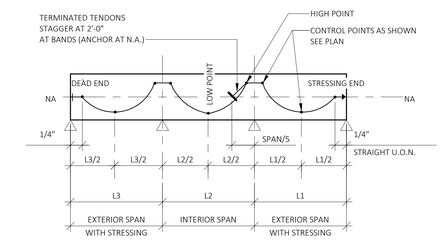

LOCATION	b (FEET)
DISTRIBUTED	L/10
BANDED	2'-0"

TYPICAL LENGTH FOR PORTIONS OF STRAIGHT TENDON

NOTE:
FOR UNIFORM SLABS N.A. IS AT MID-DEPTH. (N.A.=NEUTRAL AXIS)

4 TYPICAL PROFILE FOR PARABOLIC TENDONS

05-501-03
N.T.S

PYATOK
1611 TELEGRAPH AVE.
SUITE 200
OAKLAND, CA 94612
T. 510.465.7010 | F. 510.465.8575
www.pyatok.com

element structural engineers, inc.
39675 Cedar Blvd., Suite 295C
Newark, California 94560
Tel: 510.573.1557
eFax: 973.924.0663
www.elementse.com

Owner

2700 INTERNATIONAL

OAKLAND, CA 94601

STAMP:

REGISTERED PROFESSIONAL ENGINEER TROY N. FONTELERA S 5536 STRUCTURAL STATE OF CALIFORNIA

SIGNED DATE: 12/09/2022

ISSUE SCHEDULE

NO.	ISSUE	DATE
	100% SD	5/11/2022
	50% DD	7/15/2022
	100% DD	9/16/2022
	50% CD	11/18/2022
	PERMIT SET	12/09/2022

REVISION SCHEDULE

NO.	ISSUE	DATE

JOB NUMBER:	ESE# 3395
DRAWN BY:	YL/BDT
CHECKED BY:	JTE
ISSUE DATE:	12/09/2022
SCALE:	As indicated

TITLE:
CONCRETE DETAILS

SHEET:
S5.06

PRELIMINARY - Not for Construction -

© 2019 PYATOK ARCHITECTURE & URBAN DESIGN

12/7/2022 5:05:18 PM

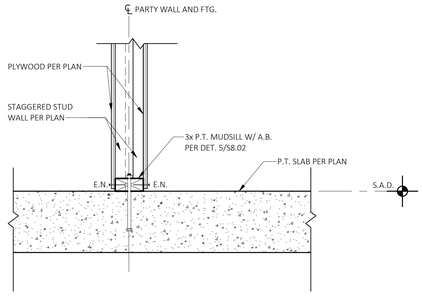

NOTE:
FOR DOUBLE SIDED PLYWOOD SHEAR WALL AT PARTY WALL CONDITION, CONTRACTOR SHALL COORDINATE SPECIAL INSPECTION OR PLYWOOD PRIOR TO ERECTING ADJACENT PARTY WALL.

13 SHEAR WALL AT CORRIDOR WALL

1" = 1'-0"

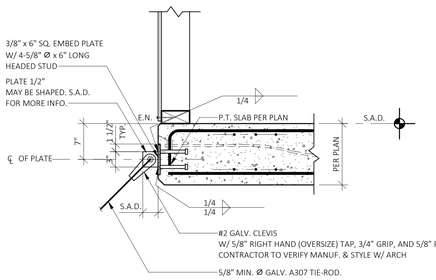

9 EMBED AT AWNING TIEBACK

1" = 1'-0"

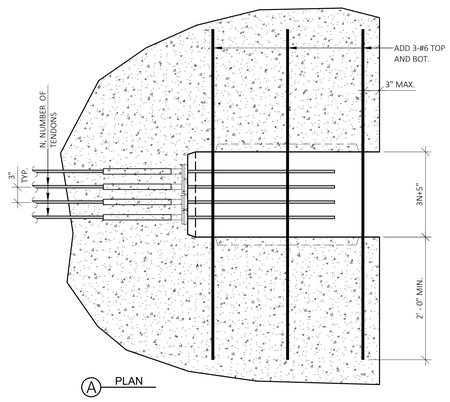

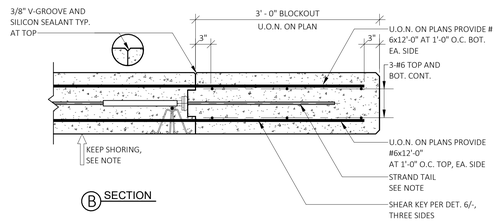

NOTES:
1. RETAIN SHORING UNTIL BLOCK OUT CONCRETE REACHES SLAB'S DESIGN STRENGTH.
2. BLOCK OUT TO BE POURED WITH NON-SHRINK CONC. NOT LESS THAN 75 DAYS AFTER STRESSING.
3. ROUGHEN & CLEAN JOINTS & WET PRIOR TO PLACING CONCRETE.
4. ELIMINATE ACCIDENTAL MISALIGNMENT EDGE OF SLABS THAT ARE TO BE JOINED WITH A POUR STRIP. USE MECHANICAL METHODS SUCH AS JACKING IF NECESSARY.
5. RAISE EDGE OF SLAB 1/4" AT CLOSURE TO ALLOW FOR SETTLEMENT.
6. PROVIDE WATERPROOFING MEMBRANE IF REQUIRED FOR WATER-TIGHTESS.
7. IF CLOSURE IS EXPOSED TO WEATHERING AND/OR MOISTURE USE GROMMETS, CUT STRESSED STAND TAILS, PREPARE AND SEAL STRESSING POCKETS AS STIPULATED IN GENERAL NOTES; CAULK JOINT ALL AROUND.

6 STRESSING BLOCKOUT DETAIL

05-501-13
N.T.S.

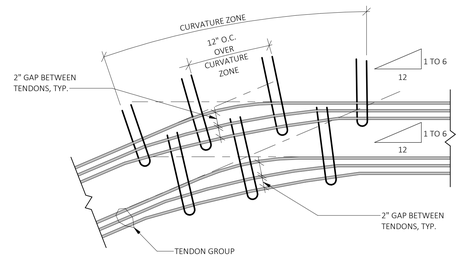

NOTES:
1. TENDONS SHOULD MAINTAIN A SMOOTH TRANSITION.
2. KEEP TENDONS MIN. 2" APART AT TURN.
3. PLACE HAIRPINS PER DET. 2/-.
4. EACH TENDON GROUP RECEIVES INDEPENDENT HAIRPINS.
5. RADIUS OF CURVATURE AT LEAST 10'-0" MIN.
6. STAGGER HAIRPINS AS SHOWN.

1 TENDON PLACEMENT

05-501-11
N.T.S

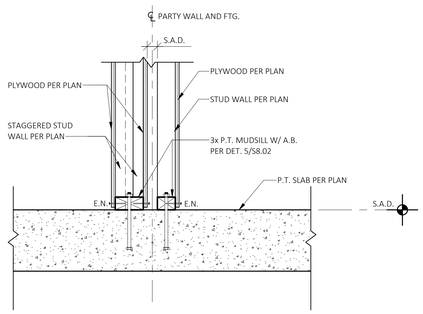

NOTE:
FOR DOUBLE SIDED PLYWOOD SHEAR WALL AT PARTY WALL CONDITION, CONTRACTOR SHALL COORDINATE SPECIAL INSPECTION OR PLYWOOD PRIOR TO ERECTING ADJACENT PARTY WALL.

14 SHEAR WALL AT PARTY WALL

1" = 1'-0"

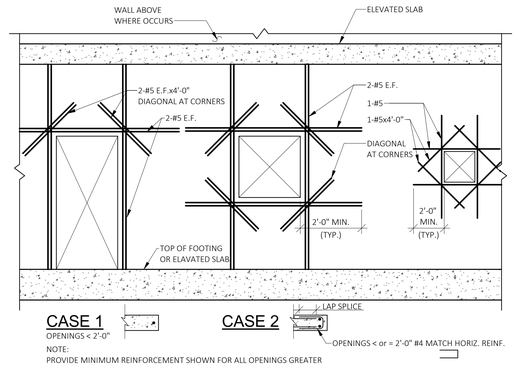

NOTE:
PROVIDE MINIMUM REINFORCEMENT SHOWN FOR ALL OPENINGS GREATER THAN 12". ALL RECESSES WALLS SHALL BE TREATED AS OPENINGS.

10 ADDED REBAR AT CONCRETE WALL OPENING

05-501-25
N.T.S.

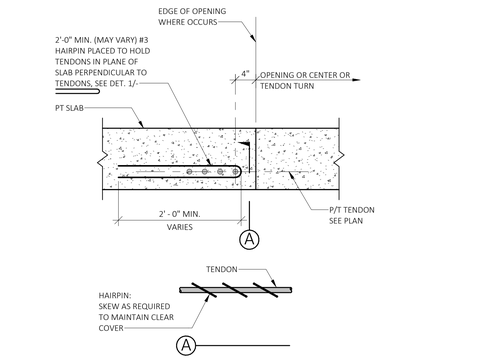

2 TYPICAL HAIRPIN AT TENDON CURVATURE

05-501-12
1" = 1'-0"

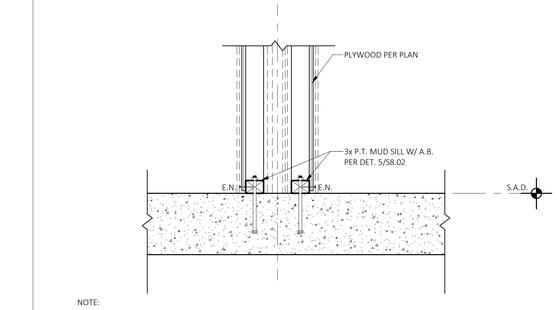

NOTE:
FOR DOUBLE SIDED PLYWOOD SHEAR WALL AT PARTY WALL CONDITION, CONTRACTOR SHALL COORDINATE SPECIAL INSPECTION OR PLYWOOD PRIOR TO ERECTING ADJACENT PARTY WALL.

15 SHEAR WALL AT PARTY WALL

1" = 1'-0"

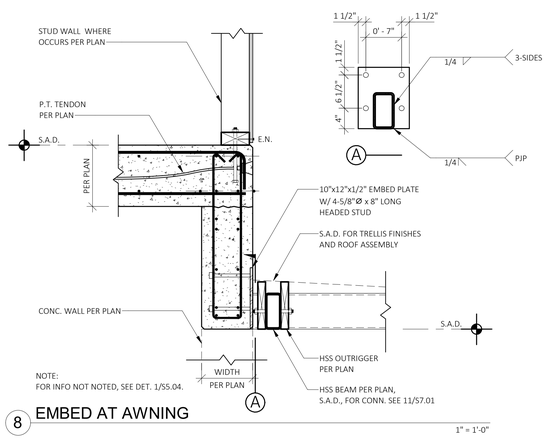

NOTE:
FOR INFO NOT NOTED, SEE DET. 1/S5.04.

8 EMBED AT AWNING

1" = 1'-0"

PYATOK
1611 TELEGRAPH AVE.
SUITE 200
OAKLAND, CA 94612
T. 510.465.7010 | F. 510.465.8575
www.pyatok.com

element structural engineers, inc.
39675 Cedar Blvd., Suite 295C
Newark, California 94560
Tel: 510.573.1557
eFax: 973.924.0663
www.elementse.com

Owner

2700 INTERNATIONAL

OAKLAND, CA 94601

STAMP:

REGISTERED PROFESSIONAL ENGINEER TRUY N. FONTELERA S 5536 STRUCTURAL STATE OF CALIFORNIA

SIGNED DATE: 12/09/2022

ISSUE SCHEDULE

NO.	ISSUE	DATE
	100% SD	5/11/2022
	50% DD	7/15/2022
	100% DD	9/16/2022
	50% CD	11/18/2022
	PERMIT SET	12/09/2022

REVISION SCHEDULE

NO.	ISSUE	DATE

JOB NUMBER:	ESE# 3395
DRAWN BY:	YL/BDT
CHECKED BY:	JTE
ISSUE DATE:	12/09/2022
SCALE:	1" = 1'-0"

TITLE:

CONCRETE DETAILS

SHEET:

S5.07

PRELIMINARY - Not for Construction -

© 2019 PYATOK ARCHITECTURE & URBAN DESIGN

12/7/2022 5:05:24 PM

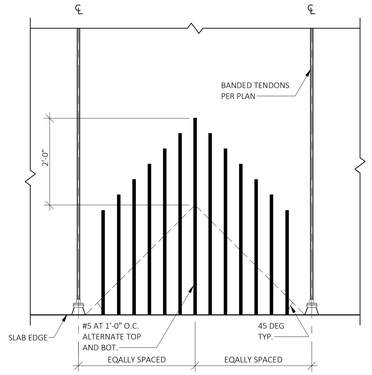

13 ARRANGEMENT OF TEMPERATURE AND SHRINKAGE REINFORCEMENT 05-501-44
N.T.S.

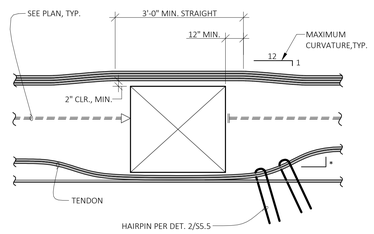

NOTE:
WHERE TENDON CURVATURE EXCEEDS 1:12 SEE DET. 1/S5.5.

9 TENDON PLACEMENT AT OPENING 24" OR LARGER 05-501-31
1" = 1'-0"

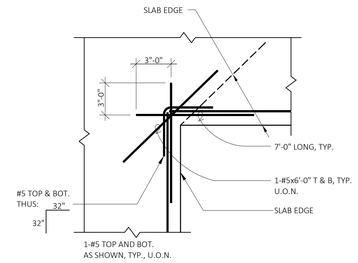

NOTE:
THESE BARS ARE IN ADDITION TO REBAR SHOWN ON PLANS.

5 TRIM BAR AT RE-ENTRANT CORNER 05-501-26
N.T.S.

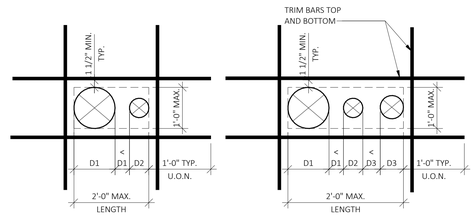

INSERTS WHICH ARE CLOSER TO ONE ANOTHER THAN THE DIAMETER OF THE LARGER OF THE TWO ARE CONSIDERED TO FORM A COMBINED OPENING:

1. IF THE COMBINED OPENING IS LESS THAN 1'-0", NO TRIM BARS ARE REQUIRED.
2. IF THE COMBINED OPENING IS MORE THAN 1'-0" BUT LESS THAN 2'-0" IN LENGTH, PROVIDE 1-#5 TOP AND BOTT., NO DIAGONAL BARS ARE NECESSARY.
3. IF COMBINED OPENING IS LARGER THAN 2'-0" REFER TO 1/- FOR TRIM BARS.

1 TRIM REINFORCEMENT FOR MULTIPLE OPENINGS IN WALLS OR SLAB 05-102-03
1" = 1'-0"

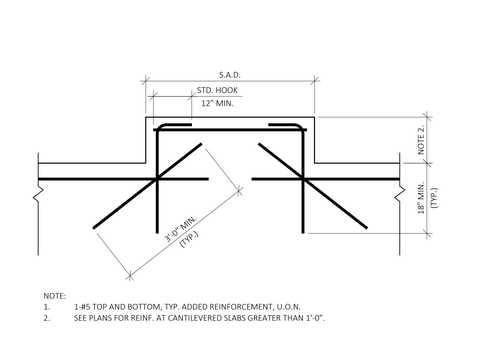

10 TRIM BAR AT SUPPORTED SLAB CORNER 05-501-23
1" = 1'-0"

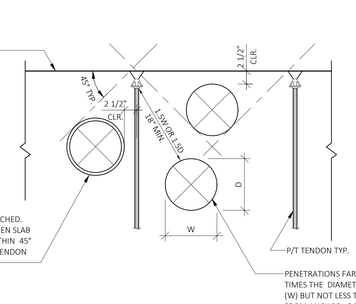

NOTE:
SEE DET. 1/-, 2/-, AND 3/- FOR TRIM REINFORCING

6 ARRANGEMENT OF DISTRIBUTED TENDON AT OPENING 6'-0" OR LARGER 05-501-34
1" = 1'-0"

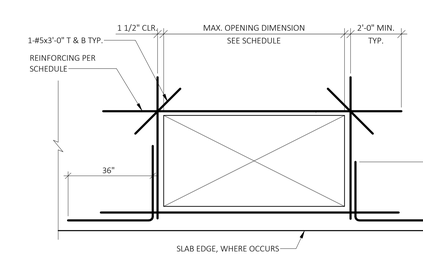

NOTE:
SINGLE OPENINGS OF SMALLER DIMENSION DO NOT REQUIRE TRIM BARS. FOR OPENINGS OF LARGER DIMENSION AND MULTIPLE OPENINGS REFER TO DET. 3/- AND 6/- RESPECTIVELY.

2 TRIM REINFORCING FOR OPENING IN SLAB FROM 12" TO 24" 05-501-29
N.T.S.

11 TRIM BAR AT RE-ENTRANT CORNER 05-501-54
1" = 1'-0"

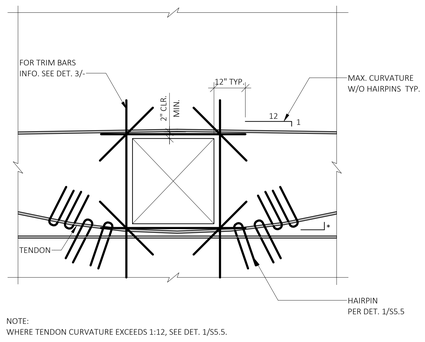

NOTE:
WHERE TENDON CURVATURE EXCEEDS 1:12, SEE DET. 1/S5.5.

7 DETAIL FOR SWEEPING TENDONS AROUND OPENINGS 05-501-33
N.T.S.

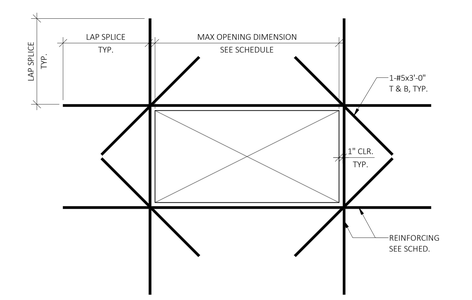

MAX. OPENING DIMENSION	REINFORCING
2'-0" TO 2'-6"	1-#5 T&B, EA. SIDE
2'-6" TO 4'-0" MAX	2-#5 T&B, EA. SIDE

NOTES:
1. ALL OPENINGS LARGER THAN 2'-0" SHALL BE TRIMMED AS SHOWN.
2. THESE BARS ARE IN ADDITION TO REBAR SHOWN ON PLANS.
3. FOR MULTIPLE OPENINS, SEE DET. 2/-.
4. FOR REINF. AT OEPNINGS LESS THAN 2'-0" IN LENGTH. SEE DET. 1/-.
5. FOR OPENINGS THAT ARE GREATER THAN 4'-0" NOTIFY E.O.R.

3 TRIM REINFORCEMENT FOR OPENINGS IN WALLS OR SLAB GREATER THAN 24" 05-102-04
3/4" = 1'-0"

16 TYPICAL SECTION AT SLAB PERIMETER 05-501-46
N.T.S.

NOTE:
1. 1-#5 TOP AND BOTTOM, TYP. ADDED REINFORCEMENT, U.O.N.
2. SEE PLANS FOR REINF. AT CANTILEVERED SLABS GREATER THAN 1'-0".

12 TRIM BAR AT CANTILEVERED SLAB 05-501-35
N.T.S.

NOTES
1. SWEEP P/T TENDONS (WHERE POSSIBLE) TO AVOID CONFLICT BETWEEN P/T ANCHORS AND OPENINGS.
2. PENETRATION WITH DIMENSIONS GREATER THAN 12" REQUIRE TRIM REINF. PER DET. 5/-.

8 OPENINGS AT UNIFORM P/T TENDON ANCHORAGE 05-501-30
N.T.S.

NOTE:
1. ALL OPENINGS LARGER THAN 12" SHALL BE TRIMMED AS SHOWN.
2. REINF. SHOWN ARE IN ADDITION TO REINF. SHOWN ON PLAN.
3. FOR MULTIPLE OPENINGS, SEE DET. 6/-.
4. FOR OPENING LESS THAN 2'-0", SEE DET. 5/-.

MAX. OPENING DIMENSION	REINFORCING
1'-0" TO 1'-6"	1-#5 EA. SIDE
1'-8" TO 2'-6" SIDE	1-#5 T&B, EA. SIDE
2'-6" & LARGER	2-#5 T& B, EA. SIDE

4 TRIM BARS FOR OPENINGS 05-501-27
N.T.S.

PYATOK
1611 TELEGRAPH AVE.
SUITE 200
OAKLAND, CA 94612
T. 510.465.7010 | F. 510.465.8575
www.pyatok.com

element structural engineers, inc.
39675 Cedar Blvd., Suite 295C
Newark, California 94560
Tel: 510.573.1557
eFax: 973.924.0663
www.elementse.com

Owner

2700 INTERNATIONAL
OAKLAND, CA 94601

STAMP:
REGISTERED PROFESSIONAL ENGINEER TROY N. FONTELERA S 5536 STRUCTURAL STATE OF CALIFORNIA
SIGNED DATE: 12/09/2022

ISSUE SCHEDULE

NO.	ISSUE	DATE
	100% SD	5/11/2022
	50% DD	7/15/2022
	100% DD	9/16/2022
	50% CD	11/18/2022
	PERMIT SET	12/09/2022

REVISION SCHEDULE

NO.	ISSUE	DATE

JOB NUMBER:	ESE# 3395
DRAWN BY:	YL/BDT
CHECKED BY:	JTE
ISSUE DATE:	12/09/2022
SCALE:	As indicated

TITLE:
CONCRETE DETAILS

SHEET:
S5.08

PRELIMINARY - Not for Construction -

© 2019 PYATOK ARCHITECTURE & URBAN DESIGN

12/7/2022 5:05:30 PM

NOTES:
1. SPECIAL INSPECTION IS REQ'D. FOR PLACEMENT OF TIE-DOWN AND TIE-DOWN REINF.
2. FLEXURAL REINF. NOT SHOWN FOR CLARITY.

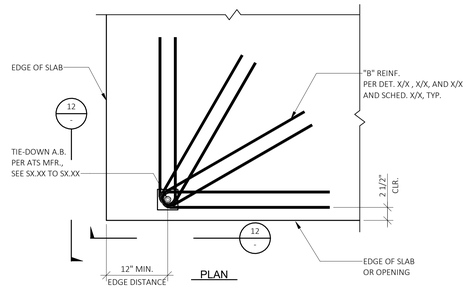

13 CORNER ANCHOR ROD

05-502-07
1" = 1'-0"

NOTE:
1. SPECIAL INSPECTION IS REQ'D FOR PLACEMENT OF TIE-DOWN A.B. AND TIE-DOWN REINF.
2. SEE DET.16/- FOR 3D GRAPHIC
3. FOR DOUBLE ANCHORS, SEE DET.3/-
4. IF TIE-DOWN PLATE IS LESS THAN 4'-0" MIN. FROM RETURN SLAB EDGE, IT SHALL BE CONSIDERED A CORNER CONTITION PER DET. 13/-.

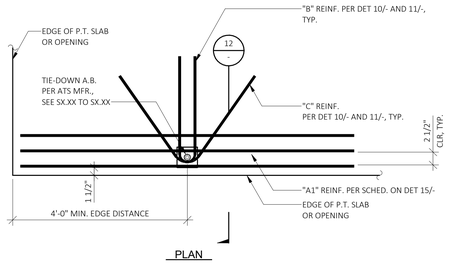

9 EDGE ANCHOR ROD

05-502-04
1" = 1'-0"

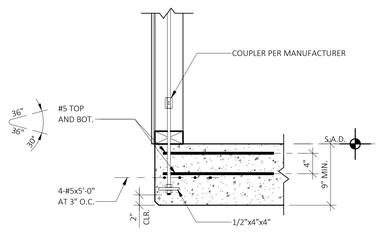

P/T TENDONS AND OTHER SLAB REINFORCING NOT SHOWN FOR CLARITY.

NOTES:
1. SPECIAL INSPECTION IS REQD. FOR PLACEMENT OF TIE-DOWN PLATES.
2. WHEN TIE-DOWN PLATE IS LESS THAN 4t FROM RETURN SLAB EDGE, CONSIDER AS CORNER CONDITION.

5 CONN. OF EDGE/CORNER TIE-DOWN ROD TO P/T SLAB

05-501-66
1" = 1'-0"

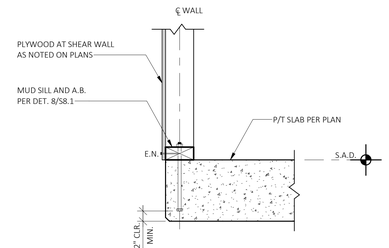

P/T TENDONS AND OTHER SLAB REINFORCING NOT SHOWN FOR CLARITY.

NOTE:
FOR INFO. NOT SHOWN OR NOTED, SEE DET. 5/-.

1 EXTERIOR WALL AT P/T SLAB

05-501-64
1" = 1'-0"

NOTES:
FOR INFO NOT SHOWN OR NOTED, SEE DET. 6/-.

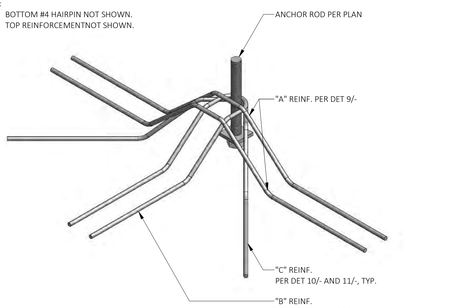

14 CORNER DOUBLE ANCHOR ROD (PARTY WALLS)

05-502-08
1" = 1'-0"

NOTE:
1. SPECIAL INSPECTION IS REQ'D FOR PLACEMENT OF TIE-DOWN A.B. AND TIE-DOWN REINF.
2. SEE DET.16/- FOR 3D GRAPHIC
3. FOR DOUBLE ANCHORS, SEE DET.3/-
4. IF TIE-DOWN PLATE IS LESS THAN 4'-0" MIN. FROM RETURN SLAB EDGE, IT SHALL BE CONSIDERED A CORNER CONTITION PER DET. 13/-.

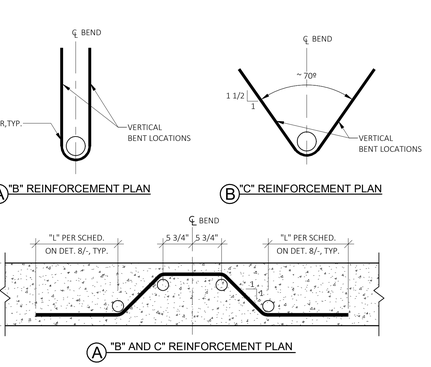

05-502-05

10 INTERIOR SINGLE ANCHOR ROD

1" = 1'-0"

HOLD DOWN SCHEDULE

HD TYPE	MIN. POST WIDTH	ANCHOR BOLT DIA.	MAX. ALLOW. LOAD (160%)
HDU5	2- 2x	PAB 5	5645#
HDU8	6x	PAB 7	7642#
HDU11	8x	PAB 8	11175#
2-HDU11	8x	PAB 8	19070#

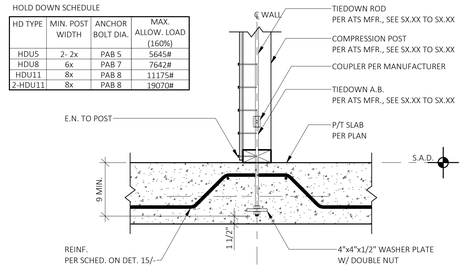

P/T TENDONS AND OTHER SLAB REINFORCING NOT SHOWN FOR CLARITY.

NOTE:
SPECIAL INSPECTION IS REQD. FOR PLACEMENT OF TIE-DOWN PLATES.

6 CONN. OF INTERIOR TIE-DOWN ROD TO P/T SLAB

05-501-65
1" = 1'-0"

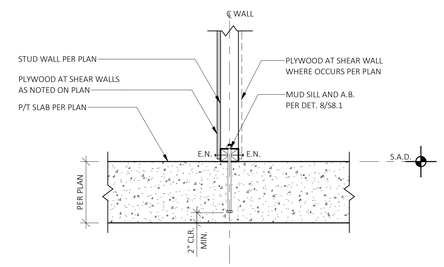

P/T TENDONS AND OTHER SLAB REINFORCING NOT SHOWN FOR CLARITY.

NOTE:
FOR INFO. NOT SHOWN OR NOTED, SEE DET. 4/-.

2 INTERIOR WALL AT P/T SLAB

05-501-69
1" = 1'-0"

11" THICK PODIUM SLAB (fc'=5000psi)
ALL ANCHOR RODS ARE ASTM F1554 GR36

TIEDOWN MARK	ANCHOR ROD DIA.	INTERIOR			EDGE						CORNER
		SINGLE DET. 1/-	DOUBLE DET. 3/-		SINGLE DET. 6/-			DOUBLE DET. 7/-			SINGLE DET. 5/-
		"A1" STRAIGHT BAR DET. 9/- DET. 16/-	"A1" STRAIGHT BAR DET. 9/- DET. 16/-	"A2" STRAIGHT BAR DET. 9/- DET. 16/-	"A1" STRAIGHT BAR DET. 9/- DET. 16/-	"B" 180° HOOK BAR DET. 10/- DET. 11/- DET. 16/-	"C" 110° HOOK BAR DET. 10/- DET. 11/- DET. 16/-	"A1" STRAIGHT BAR DET. 9/- DET. 16/-	"B" 180° HOOK BAR DET. 10/- DET. 11/- DET. 16/-	"B" 180° HOOK BAR DET. 10/- DET. 11/- DET. 16/-	"B" 180° HOOK BAR DET. 10/- DET. 11/- DET. 16/-
TD31	7/8"	(2) #5 EA. WAY	(4) #5	(4) #5	(2) #5	(1) #5	(1) #5	(2) #5	(4) #5	(4) #5	(4) #5
TD32	1"	(2) #5 EA. WAY	(4) #5	(4) #5	(2) #5	(1) #5	(1) #5	(2) #5	(4) #5	(4) #5	(4) #5
TD33	1 1/8"	(2) #5 EA. WAY	(4) #5	(4) #5	(2) #5	(1) #5	(1) #5	(2) #5	(4) #5	(4) #5	(4) #5

FOR ANCHOR ROD AT THE PROXIMITY OF STEP SLAB, SEE DET. 8/-

15 REINFORCEMENT SCHEDULE

05-502-09
1" = 1'-0"

NOTES:
FOR INFO NOT SHOWN OR NOTED, SEE DET. 1/-.

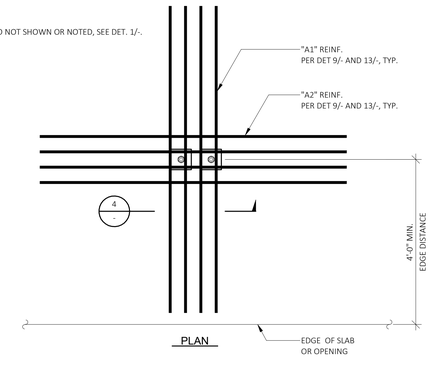

05-502-06

11 INTERIOR DOUBLE ANCHOR ROD (PARTY WALLS)

1" = 1'-0"

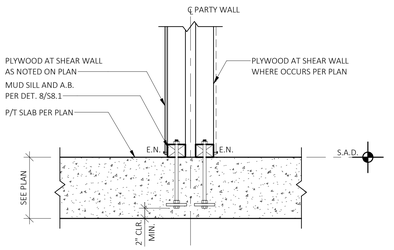

P/T TENDONS AND OTHER SLAB REINFORCING NOT SHOWN FOR CLARITY.

NOTE:
1. SPECIAL INSPECTION IS REQ'D. FOR PLACEMENT OF TIE-DOWN.
2. FOR INFO. NOT SHOWN, SEE DET. 3/-OR 4/-.

7 SHEAR WALL PARTY WALL AT P/T SLAB

1" = 1'-0"

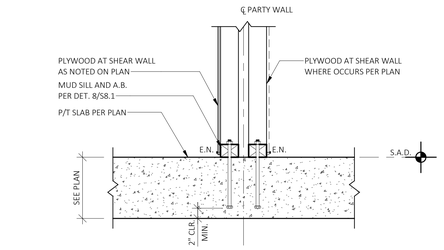

P/T TENDONS AND OTHER SLAB REINFORCING NOT SHOWN FOR CLARITY.

NOTE:
FOR INFO. NOT SHOWN OR NOTED, SEE DET. 3/S5.02.

3 SHEAR WALL PARTY WALL AT P/T SLAB

05-501-70
1" = 1'-0"

NOTES:
1. BOTTOM #4 HAIRPIN NOT SHOWN.
2. TOP REINFORCEMENTNOT SHOWN.

16 3D REFENCE FOR REINF.

05-502-10
1" = 1'-0"

NOTE:
1. FOR INFO. NOT NOTED, SEE DET. 8/-.
2. "t" MIN. SLAB THICKNESS PER PLAN.

12 "B" AND "C" REINFORCEMENT

1" = 1'-0"

REINF.	CONCRETE STRENGTH (psi)	L (in.)
#5	4000	21
#5	5000	19

NOTES:
1. "t" = MIN. SLAB THICKNESS PER PLAN.
2. FOR INFO. NOT NOTED, SEE A

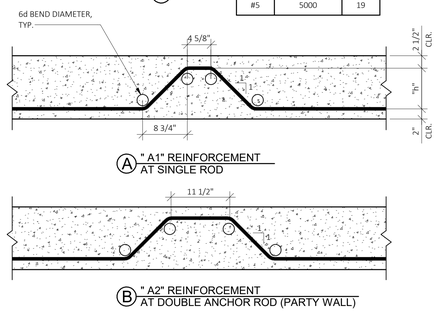

8 "A" INTERIOR REINFORCEMENT

05-502-01
1" = 1'-0"

PYATOK
1611 TELEGRAPH AVE.
SUITE 200
OAKLAND, CA 94612
T. 510.465.7010 | F. 510.465.8575
www.pyatok.com

element structural engineers, inc.
39675 Cedar Blvd., Suite 295C
Newark, California 94560
Tel: 510.573.1557
eFax: 973.924.0663
www.elementse.com

Owner

2700 INTERNATIONAL
OAKLAND, CA 94601

STAMP:
REGISTERED PROFESSIONAL ENGINEER TROY N. FONTELERA S 5536 STRUCTURAL STATE OF CALIFORNIA
SIGNED DATE: 12/09/2022

ISSUE SCHEDULE

NO.	ISSUE	DATE
	100% SD	5/11/2022
	50% DD	7/15/2022
	100% DD	9/16/2022
	50% CD	11/18/2022
	PERMIT SET	12/09/2022

REVISION SCHEDULE

NO.	ISSUE	DATE

JOB NUMBER: ESE# 3395
DRAWN BY: YL/BDT
CHECKED BY: JTE
ISSUE DATE: 12/09/2022
SCALE: 1" = 1'-0"
TITLE: **CONCRETE DETAILS**

SHEET: **S5.09**

PRELIMINARY - Not for Construction -

© 2019 PYATOK ARCHITECTURE & URBAN DESIGN

12/7/2022 5:05:37 PM

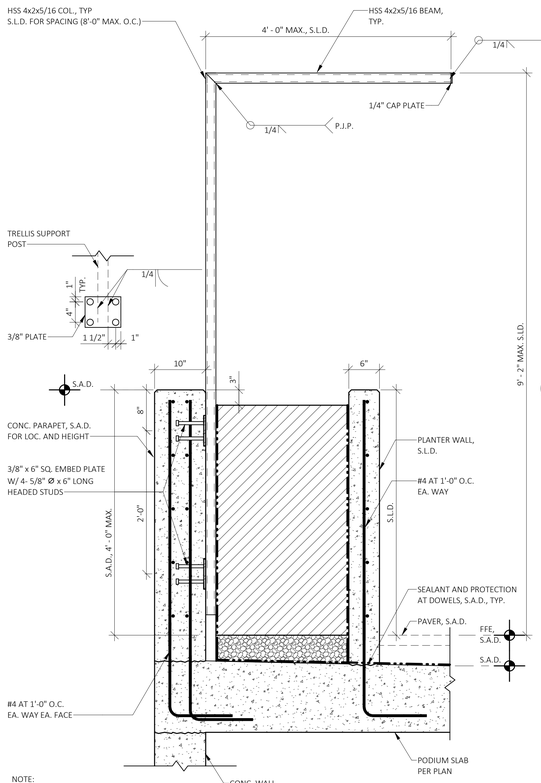

14 EDGE OF PODIUM AT COURTYARD

1" = 1'-0"

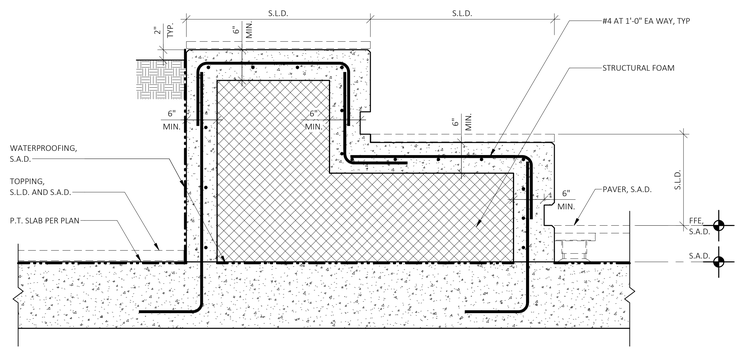

NOTE:
P/T TENDONS AND OTHER SLAB REINFORCING NOT SHOWN FOR CLARITY

10 TERRACED SEATING AT COURTYARD

1" = 1'-0"

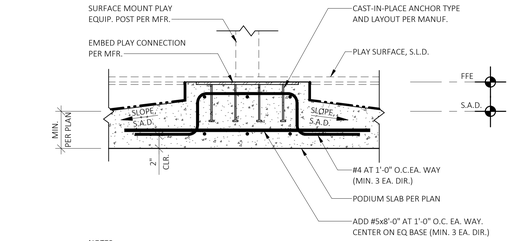

NOTES:
1. P/T TENDONS AND SLAB REINF. NOT SHOWN FOR CLARITY.
2. S.A.D. & S.L.D. FOR PLAY EQUIP. LAYOUT. CONTRACTOR TO COORDINATE BASE EMBED SIZE AND LOCATION PRIOR TO CONSTRUCTION.

1 PLAY EQUIP BASE DETAIL AT P/T SLAB

N.T.S.

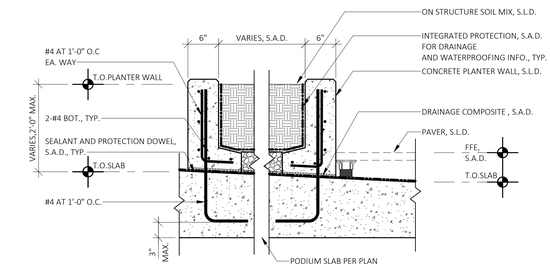

NOTE:
P/T TENDONS AND OTHER SLAB REINF. ARE NOT SHOWN FOR CLARITY

2 PLANTER ON PODIUM

1" = 1'-0"

PYATOK
1611 TELEGRAPH AVE.
SUITE 200
OAKLAND, CA 94612
T. 510.465.7010 | F. 510.465.8575
www.pyatok.com

element structural engineers, inc.
39675 Cedar Blvd., Suite 295C
Newark, California 94560
Tel: 510.573.1557
eFax: 973.924.0663
www.elementse.com

Owner

2700 INTERNATIONAL

OAKLAND, CA 94601

STAMP:

REGISTERED PROFESSIONAL ENGINEER TROY N. FONTELERA S 5536 STRUCTURAL STATE OF CALIFORNIA

SIGNED DATE: 12/09/2022

ISSUE SCHEDULE

NO.	ISSUE	DATE
	100% SD	5/11/2022
	50% DD	7/15/2022
	100% DD	9/16/2022
	50% CD	11/18/2022
	PERMIT SET	12/09/2022

REVISION SCHEDULE

NO.	ISSUE	DATE

JOB NUMBER:	ESE# 3395
DRAWN BY:	YL/BDT
CHECKED BY:	JTE
ISSUE DATE:	12/09/2022
SCALE:	N.T.S.

TITLE:

CONCRETE DETAILS

SHEET:

S5.10

PRELIMINARY - Not for Construction -

© 2019 PYATOK ARCHITECTURE & URBAN DESIGN

12/7/2022 5:05:42 PM

GENERAL NOTES

1. THE SLACKJACK™ DEVICE COMPONENTS INCLUDE:
   A. SJA INNER AND OUTER SLEEVE CYLINDERS
   B. PRE-COMPRESSED COMPRESSION SPRING
   C. NUT: ALL NUTS TO CONFORM TO ASTM A563 GRADE "A" FOR 60 ksi AND GRADE "C" FOR 120 ksi TENSILE STRENGTH THREADED RODS.
   D. SWIVEL WASHER
2. ALL THREADED RODS SHALL CONFORM TO THE FOLLOWING SHOP DRAWING MARKS:
   1. Rx = ASTM A36 OR A307, fu = 60 ksi.
   2. RxM = ASTM F1554 GRADE 55, fu = 75 ksi.
   3. RxHS = ASTM A449 (fu = 120 ksi UP 1". fu = 105 ksi 1-1/8" THRU 2-1/2") or ASTM A193B7 (fu = 125 ksi).

   NOTES:
   a. x = ROD DIAMETER IN EIGHTS OF AN INCH. (ie. R7M = 7/8" ASTM F1554 GRADE 55)
   b. "M" ROD ARE ZINC PLATED FINISH.
3. **STANDARD AND HIGH STRENGTH (HS) RODS ARE PLAIN (UNCOATED) CARBON STEEL, HS WILL BE PAINTED ORANGE AT THE CENTER OF ROD.**
4. ALL BEARING PLATES ARE FABRICATED FROM ASTM A36 STEEL.
5. ALL STEEL BEARING PLATES SHALL HAVE FULL BEARING CONTACT AREA ON WOOD MEMBERS.
6. COUPLING NUT CONNECTION: CONTRACTOR SHALL BE RESPONSIBLE TO VERIFY THAT AT CONNECTIONS WITH THE SAME SIZE ROD THAT EACH ROD IS THREADED HALF WAY INTO COUPLER FROM EACH SIDE. HIGH STRENGTH (HS) COUPLERS SHALL BE USED WITH HIGH STRENGTH (HS) RODS UNLESS NOTED OTHERWISE. STANDARD STRENGTH COUPLERS ARE ZINC PLATED. HIGH STRENGTH (HS) ARE NOT PLATED. WHERE REDUCING COUPLERS ARE USED, COUPLER SHALL BE FULLY SEATED ON THE LARGER DIAMETER ROD BEFORE ENGAGING THE SMALLER DIAMETER ROD. **SIGHT HOLES ARE PROVIDED ON STRAIGHT COUPLERS ONLY, SIGHT HOLES ARE NOT REQUIRED ON REDUCING COUPLERS.**
7. COLORS REFERENCED ON THIS DRAWING ARE PROVIDED FOR CONVENIENCE TO THE INSTALLER AND FOR INSPECTION PURPOSES.
8. SILICONE OR CAULKING SHALL NOT BE PLACED INTO THE SLACKJACK DEVICE OR ANY DRILLED HOLE FOR RODS AT ANY TIME. CONTRACTOR SHALL USE FIRE RATED ROCKWOOL OR NON-HARDENING FIRESTOP. (PROVIDED BY OTHERS).
9. ANCHOR BOLT ASSEMBLIES AND EMBEDMENTS DEPTHS ARE PROVIDED BY OTHERS. ANCHOR BOLTS ARE SHOWN FOR CONVENIENCE TO THE INSTALLER.
10. HOLDOWN RUN ELEVATION VIEWS ARE DIAGRAMS AND MAY NOT DEPICT THE CORRECT NUMBER OF COLLECTOR STUDS REQUIRED. REFER TO COLLECTOR STUD PLAN DIAGRAMS FOR REQUIRED AMOUNT OF ADDITIONAL STUDS DEPENDING ON SHEAR WALL FRAMING TYPE. ADDITIONAL COMPRESSION STUDS OR POSTS MAY BE REQUIRED BY THE STRUCTURAL PLANS FOR DEAD AND LIVE LOADS.
11. THIS DRAWING WILL BE REVIEWED BY THE ENGINEER OF RECORD. UPON APPROVAL, U.N.O. THIS DRAWING REPLACES THE HOLDOWN SYSTEM PER THE STRUCTURAL PLANS.
12. ENGINEER OF RECORD SHALL VERIFY COMPLETE LOAD TRANSFER TO FOUNDATION LEVEL INCLUDING ALL CODE REQUIRED LOAD FACTORS.
13. WOOD FLOOR LEVELS SHOWN ARE RELATIVE TO THE CONCRETE FOUNDATION AND MAY NOT REFLECT THOSE SHOWN IN THE PLANS.
14. CONTRACTOR MAY SUBSTITUTE POSTS WITH 2x MEMBERS OR VICE VERSA ONLY IF TOTAL BEARING PLATE AREA ON BOTTOM PLATE IS EQUAL.
15. REFER TO THE COLLECTOR STUD SCHEDULE FOR WOOD STUD AND FLOOR PLATE MATERIALS USED IN LOAD CALCULATION ASSUMPTIONS. THE MATERIALS SHALL MATCH STRUCTURAL DRAWING REQUIREMENTS UNLESS NOTED OTHERWISE.
16. FULL HEIGHT COLLECTOR STUD REQUIREMENTS (NOT AT BRIDGE LEVEL – SEE 17A):
   A. FULL HEIGHT BUNDLED 2x, 3x COLLECTOR/COMPRESSION STUDS, THE OUTERMOST STUD FROM EACH SIDE OF THE THREADED ROD SHALL RECEIVE EDGE NAILING PER THE SHEAR WALL SCHEDULE OF THE STRUCTURAL PLANS. EDGE NAILING MAY BE STAGGERED/DISPERSED ON (2) MEMBERS MAX. ANY REMAINING INTERIOR STUDS SHALL RECEIVE FIELD NAILING PER THE SHEAR WALL SCHEDULE OF THE STRUCTURAL PLANS.
   B. FULL HEIGHT 4x COLLECTOR/COMPRESSION AT OUTERMOST POST FROM EACH SIDE OF THE THREADED ROD SHALL RECEIVE ONE (1) ROW OF EDGE NAILING PER THE SHEAR WALL SCHEDULE OF THE STRUCTURAL PLANS. ANY REMAINING 2x, 3x, 4x INTERIOR MEMBERS SHALL RECEIVE FIELD NAILING PER THE SHEAR WALL SCHEDULE OF THE STRUCTURAL PLANS.
   C. FULL HEIGHT 6x AND LARGER COLLECTOR/COMPRESSION AT OUTERMOST POST FROM EACH SIDE OF THE THREADED ROD SHALL RECEIVE TWO (2) ROWS OF EDGE NAILING PER THE SHEAR WALL SCHEDULE OF THE STRUCTURAL PLANS. ANY REMAINING INTERIOR POSTS CAN BE FIELD NAILED PER THE SHEAR WALL SCHEDULE OF THE STRUCTURAL PLANS.
   D. WINDOW AND DOOR TRIMMERS MAY BE USED AS HOLDOWN COLLECTOR STUDS IF THE FOLLOWING CONDITIONS ARE MET:
      – A CONTINUOUS VERTICAL LOAD PATH SHALL EXIST FROM WALL TOP PLTS. TO WALL BOTTOM PLTS.
      – ALL WOOD MEMBERS IN THE CONTINUOUS VERTICAL LOAD PATH SHALL BE NAILED ACCORDING TO THE EARTHBOUND SYSTEM REQUIREMENTS.
      – THE SHEAR PANEL MUST EXTEND TO INCLUDE THE TRIMMERS USED.
   E. COMPRESSION STUDS/POSTS SHALL BE INSTALLED SYMMETRICALLY ABOUT ROD. WHERE QUANTITY OF STUDS IS GREATER THAN THE SPACE BETWEEN ROD OR BEARING PLATE AND THE END OF SHEAR WALL THE ADDITIONAL REQUIRED STUDS SHALL BE ADDED TO THE OPPOSITE SIDE OF ROD (ASYMMETRICALLY).
   F. STITCH NAILING OF BUNDLED OR BUILT UP STUD PACKS SHALL CONFORM TO IBC TABLE 2304.10.1.
17. COMPRESSION BRIDGE REQUIREMENTS:
   A. ALL FULL HEIGHT 2x AND 3x MEMBERS ON EITHER END OF THE BRIDGE SHALL RECEIVE EDGE NAILING PER THE SHEAR WALL SCHEDULE OF THE STRUCTURAL PLANS.
   B. ALL FULL HEIGHT 4x COLLECTOR/COMPRESSION POSTS ON EITHER SIDE OF THE BRIDGE SHALL RECEIVE ONE (1) ROW OF EDGE NAILING PER THE SHEAR WALL SCHEDULE OF THE STRUCTURAL PLANS.
   C. ALL FULL HEIGHT 6x AND LARGER COLLECTOR/COMPRESSION POSTS ON EITHER SIDE OF THE BRIDGE SHALL RECEIVE TWO (2) ROWS OF EDGE NAILING PER THE SHEAR WALL SCHEDULE OF THE STRUCTURAL PLANS.
   D. ALL BRIDGE TRIMMERS SHALL BE 2x MEMBERS ONLY (U.N.O.) AND SHALL BE INSTALLED SYMMETRICALLY AS SHOWN (U.N.O.).
   E. ALL BRIDGE TRIMMERS SHALL RECEIVE EDGE NAILING PER THE SHEAR WALL SCHEDULE OF THE STRUCTURAL PLANS (U.N.O.).
   F. THE BRIDGE TRIMMERS ADJACENT TO THE FULL HEIGHT STUDS (ONE EACH SIDE) SHALL RECEIVE FACE (STITCH) NAILING TWO (2) ROWS AT 4" O.C. TRIMMERS IN ADDITION TO ONE EACH SIDE SHALL BE STITCH NAILED AT 12" O.C. AS REQUIRED BY IBC TABLE 2304.10.1. FACE NAILS MAY BE NAILED FROM THE OPPOSITE DIRECTION THAN THAT SHOWN IN THE DETAIL.
   G. FACE NAILS SHALL BE 10d MINIMUM. USE 16d NAILS MINIMUM WHEN NAILING THROUGH 3x STUDS INTO 2x BRIDGE TRIMMERS.
   H. IF MULTIPLE BRIDGE TRIMMERS ON EACH SIDE ARE REQUIRED, DO NOT INSTALL THE TRIMMERS IN ADDITION TO ONE EACH SIDE UNTIL THE FACE NAILING HAS BEEN INSPECTED AND APPROVED.
   I. BRIDGE BLOCK SHALL BE 4x6 DF IN 4x WALLS, 6x6 DF IN 6x WALLS (U.N.O.). BRIDGE BLOCK SHALL ALWAYS BE 5-1/2" TALL MINIMUM.
   J. BRIDGE BLOCK SHALL BE DOUGLAS FIR CONSTRUCTION GRADE WITH MINIMUM 800 PSI ALLOWABLE BENDING STRESS. TIMBERSTRAND LSL BEAM MATERIAL OF EQUAL OR GREATER DIMENSION IS AN ACCEPTABLE ALTERNATE (U.N.O.).
   K. BRIDGE HEIGHTS SHOWN ARE THE MINIMUM HEIGHT FROM SUBFLOOR TO BOTTOM OF BRIDGE MEMBER.
   L. ONLY COMMON NAILS SHALL BE USED.
18. DRILLED OR BORED HOLES: DRILLED HOLES THROUGH VERTICAL COMPRESSION MEMBERS SHALL NOT EXCEED 25% OF THE STUD OR POST WIDTH, FOR EXAMPLE: 7/8" DIA. HOLE IS MAXIMUM ALLOWED IN 3 1/2" WIDE STUD OR POST UNLESS APPROVED BY EOR. THE BORED HOLE SHALL BE AT LEAST 5/8" AWAY FROM EDGE OF STUD.
19. CUTTING AND NOTCHING: WOOD VERTICAL COMPRESSION MEMBERS ARE PERMITTED TO BE CUT OR NOTCHED TO A DEPTH NOT EXCEEDING 25% OF IT'S WIDTH PER 2308.5.9 PER IBC 2018.
20. STUD/POST/TRIMMER NOTCHING AT CONFLICTING BEARING PLATES INTERFERENCE.
   A. THE MEMBER SHALL BE NOTCHED TO THE EXACT THICKNESS AND AREA OF THE STEEL PLATE TO MAINTAIN THE FULL BEARING AREA OF THE NOTCHED COMPRESSION MEMBER.
   B. IF THE REQUIREMENTS OF ITEM "A" ABOVE ARE NOT MET, THEN ADDITIONAL COMPRESSION MEMBERS SHALL BE ADDED TO ACHIEVE THE REQUIRED TOTAL BEARING AREA. ADDITIONAL COMPRESSION MEMBERS SHALL RECEIVE SHEAR PANEL NAILING PER THE REQUIREMENTS OF THE EARTHBOUND SHOP DRAWINGS.
   C. STEEL SHIMS OR FULL WIDTH PLATE MAY BE USED IN LIEU OF NOTCHING.
21. MINIMUM REQUIREMENTS FOR BLOCKING IN THE JOIST SPACE AT HOLDOWN LOCATIONS ARE:
   A. BLOCKING SHALL SPAN THE FULL WIDTH OF THE SHEAR WALL TOP PLATE OF THE FLOOR LEVEL BELOW THE JOIST SPACE.
   B. BLOCKING SHALL EQUAL THE OUTERMOST DIMENSIONS OF THE "FOOTPRINT" OF THE TOTAL HOLDOWN WOOD COMPRESSION MEMBERS OF THE FLOOR LEVELS BELOW AND ABOVE THE JOIST SPACE.
   C. THE SPACE BETWEEN BLOCKING WHERE THE ROD IS LOCATED SHALL NOT EXCEED 3".
   D. COMPRESSION CAPACITIES OF BLOCKING MATERIALS SHALL BE EQUAL TO OR GREATER THAN THE RELATED JOISTS. THE VERTICAL DIMENSIONS SHALL BE EQUAL. SEE NOTE "E" FOR EXCEPTION.
   E. VERTICAL GRAIN BLOCKING SHALL BE TRIMMED TO ACCOUNT FOR POSSIBLE SHRINKAGE OF THE JOISTS. CONTACT JOIST MANUFACTURER FOR SHRINKAGE INFORMATION.
   F. FLOOR JOISTS SHALL NOT BE REMOVED TO ALLOW FOR THE INSTALLATION OF BLOCKING. BLOCKING IS IN ADDITION TO THE EXISTING JOISTS.
   G. WEB STIFFENERS SHALL BE ADDED TO ENGINEERED LUMBER "I" JOISTS AND "I" JOIST MATERIAL USED AS BLOCKING. SEE NOTE "B" ABOVE.

JOB SPECIFIC NOTES:

X = DETAIL NUMBER
Y = ELEVATION SHEET
Z = DETAIL DRAWN ON

EARTHBOUND DETAIL BUBBLE LEGEND

EARTHBOUND CUSTOM BEARING PLATE CAPACITIES (DF)					
PLATE SIZE	APPLIED MAX. CAP.	COLOR CODE	PLATE DIMENSIONS (INCHES) WIDTH	LENGTH	THICK.
PL-1005501100	14,500 LBS	WHITE & BLUE	5-1/2"	11"	1"
PL-1005501800	29,000 LBS	WHITE & ORANGE	5-1/2"	18"	1"

FOR USE AT DOUBLE BRIDGE DESIGN ONLY.

ABBREVIATIONS

AB	ANCHOR BOLT PER ROD COMPONENT SCHEDULE
BLKG	BLOCKING
C	COUPLER
FND	FOUNDATION
G	HOT DIPPED GALVANIZED ROD OR GALV. TAPPED COMPONENT
GG	COUPLER GALV. TAPPED ON BOTH ENDS
GS	COUPLER GALV. TAPPED ON SMALLER END
CB	CORROSION BARRIER
HS	HIGH STRENGTH
SJA 4XY	SLACKJACK™ COMPONENT (X) = SLACKJACK DEVICE SERIES TRAVEL 1=1 INCH (RED), 2=2 INCHES (GREEN) (Y) = ROD SIZE
JST	JOIST
MIN.	MINIMUM
O.C.	ON CENTER
P	PLATE
PG	PERPENDICULAR TO GRAIN
R	ROD
UNO	UNLESS NOTED OTHERWISE

SHOP DRAWING DISCLAIMER

THESE SHOP DRAWINGS ILLUSTRATE THE DETAILS OF THE EARTHBOUND SEISMIC HOLDOWN SYSTEM. THEY WERE PREPARED IN CONFORMANCE WITH THE STRUCTURAL DESIGN PROVIDED TO EARTHBOUND CORPORATION ("EB CORP.") BY THE PROJECT OWNER OR ITS REPRESENTATIVE.

EB CORP. TOOK NO PART IN THE PREPARATION OR REVIEW OF SAID STRUCTURAL DESIGN AND EB CORP DISCLAIMS ANY LIABILITY FOR IT. THE STAMP OR SEAL OF AN EB CORPORATION EMPLOYEE OR AGENT ON THESE SHOP DRAWINGS PERTAIN ONLY TO THE TRANSFER OF THE FORCES REQUIRED BY THE ENGINEER OF RECORD ON THE STRUCTURAL DRAWINGS AND NOT TO THE REVIEW AND ADEQUACY OF THE STRUCTURAL DESIGN.

NO WARRANTY, EXPRESSED OR IMPLIED, AS TO THE ADEQUACY OF THE STRUCTURAL DESIGN IS MADE BY ANY SUCH STAMP OR SEAL.

COLLECTOR STUD DIAGRAM KEY

1. * (ASTERISK) INDICATES 1/2 HEIGHT TRIMMER (UNLESS NOTED OTHERWISE) FOR COMPRESSION BRIDGE.
2. COLLECTOR STUDS SHOWN ARE THE MINIMUM REQUIREMENT TO EQUAL THE UPLIFT TENSION FORCES CALLED OUT BY THE STRUCTURAL DWGS. ADDITIONAL COMPRESSION STUDS OR POSTS MAY BE REQUIRED BY STRUCTURAL ENGINEER OF RECORD. APPLIES TO ALL HOLDOWN RUNS.

COMPONENT SELECTION SCHEDULES

EARTHBOUND THREADED ROD CAPACITIES (IBC 2018/CBC 2019)				
ROD SIZE	ROD SIZE (INCHES)	ALLOWABLE TENSION LOAD IBC 2018/CBC 2019	ROD REMARKS	SLACKJACK SIZE
R4	1/2" DIA.	4,470 LBS	ASTM A 307 (UNC)	MJ100, MJ200
R5	5/8" DIA.	7,120 LBS	ASTM A 307 (UNC)	SJA 215, 225, 415, 425
R6	3/4" DIA.	10,540 LBS	ASTM A 307 (UNC)	SJA 216, 226, 416, 426, HJA 716, 726
R7	7/8" DIA.	14,540 LBS	ASTM A 307 (UNC)	SJA 217, 227, 417, 427, HJA 717, 727
R8	1" DIA.	19,080 LBS	ASTM A 307 (UNC)	SJA 218, 228, 418, 428, HJA 718, 728
R9	1 1/8" DIA.	24,040 LBS	ASTM A 307 (UNC)	SJA 219, 229, 419, 429, HJA 719, 729
R10	1 1/4" DIA.	30,530 LBS	ASTM A 307 (UNC)	SJA 4110, 4210, HJA 7110, 7210, HJS 4110, 4210
R12	1 1/2" DIA.	44,270 LBS	ASTM A 307 (UNC)	SJST 4112, 4212, HJA 7112, 7212, HJS 4112, 4212
R14	1 3/4" DIA.	59,830 LBS	ASTM A 307 (UNC)	-----
R16	2" DIA.	78,690 LBS	ASTM A 307 (UNC)	-----
R6M	3/4" DIA.	13,170 LBS	ASTM F1554 GR55 (UNC)	SJA 216, 226, 416, 426, HJA 716, 726
R7M	7/8" DIA.	18,180 LBS	ASTM F1554 GR55 (UNC)	SJA 217, 227, 417, 427, HJA 717, 727
R8M	1" DIA.	23,850 LBS	ASTM F1554 GR55 (UNC)	SJA 218, 228, 418, 428, HJA 718, 728
R9M	1 1/8" DIA.	30,050 LBS	ASTM F1554 GR55 (UNC)	SJA 219, 229, 419, 429, HJA 719, 729
R10M	1 1/4" DIA.	38,160 LBS	ASTM F1554 GR55 (UNC)	SJA 4110, 4210, HJA 7110, 7210, HJS 4110, 4210
R12M	1 1/2" DIA.	55,330 LBS	ASTM F1554 GR55 (UNC)	SJST 4112, 4212, HJA 7112, 7212, HJS 4112, 4212
R14M	1 3/4" DIA.	74,790 LBS	ASTM F1554 GR55 (UNC)	-----
R6HS	3/4" DIA.	21,950 LBS	ASTM A193 B7 (UNC)	SJA 216, 226, 416, 426, HJA 716, 726
R7HS	7/8" DIA.	30,300 LBS	ASTM A193 B7 (UNC)	SJA 217, 227, 417, 427, HJA 717, 727
R8HS	1" DIA.	39,750 LBS	ASTM A193 B7 (UNC)	SJA 218, 228, 418, 428, HJA 718, 728
R9HS	1 1/8" DIA.	50,090 LBS	ASTM A193 B7 (UNC)	SJA 219, 229, 419, 429, HJA 719, 729
R10HS	1 1/4" DIA.	63,600 LBS	ASTM A193 B7 (UNC)	SJA 4110, 4210, HJA 7110, 7210, HJS 4110, 4210
R12HS	1 1/2" DIA.	92,220 LBS	ASTM A193 B7 (UNC)	SJST 4112, 4212, HJA 7112, 7212, HJS 4112, 4212
R14HS	1 3/4" DIA.	124,650 LBS	ASTM A193 B7 (UNC)	-----

EARTHBOUND BEARING PLATE CAPACITIES (DF)					
PLATE SIZE	DIFFERENTIAL LOAD*	COLOR CODE	PLATE DIMENSIONS (INCHES) WIDTH	LENGTH	THICK.
P6	6,650 LBS	GREEN	3"	3.5"	1/4"
P8	8,470 LBS	BLACK	3-1/4"	4.25"	1/4"
P10	10,320 LBS	BLUE	3-1/4"	5"	3/8"
P12	12,230 LBS	GRAY	3-1/4"	6"	5/8"
P14	13,660 LBS	RED	3-1/4"	7"	3/4"
P18	18,840 LBS	YELLOW	3-1/2"	9"	1"
P20	21,020 LBS	BROWN	3-1/2"	10"	1"
P22	23,210 LBS	WHITE	3-1/2"	11"	1 1/4"
P24	24,310 LBS	GOLD	3-1/2"	11.5"	1 1/4"
P26	26,490 LBS	ORANGE	3-1/2"	12.5"	1 1/2"

SJA ROD SIZE CODES			
PART NO.	ROD DIAMETER	ROD SIZE	WASHER COLOR
MJ100 or MJ200	1/2"	R4	PURPLE
SJA 2x5 or 4x5	5/8"	R5	BLACK
SJA 2x6 or 4x6, HJA 7x6	3/4"	R6 or R6HS	GRAY
SJA 2x7 or 4x7, HJA 7x7	7/8"	R7 or R7HS	BLUE
SJA 2x8 or 4x8, HJA 7x8	1"	R8 or R8HS	YELLOW
SJA 2x9 or 4x9, HJA 7x9	1 1/8"	R9 or R9HS	WHITE
SJA 4x10, HJA 7x10, HJS 4x10	1 1/4"	R10 or R10HS	GREEN
SJST 4x12, HJA 7x12, HJS 4x12	1 1/2"	R12 or R12HS	RED

"x" = SLACKJACK TRAVEL IN "INCHES"

NOTES:
1. TENSION LOAD WAS CALCULATED FROM THE FOLLOWING EQUATION:
   A. ASTM A 307 Threaded Rod Capacities are F'u = 60,000 psi. UNC thread pitch
   M Rods are based on ASTM A1554GR55, F'u = 75 ksi.
   HS Rods are based on ASTM A193 B7, F'u = 125 ksi
   B. The IBC 2018 column is calculated in accordance to Section 1613 and ASCE 7-16.
2. PLATE STEEL SHALL BE ASTM A36: F'u = 60,000 PSI.
3. SUBSTITUTIONS OF DESIGNATED BEARING PLATE SHALL NOT BE PERMITTED, OBTAIN WRITTEN APPROVAL FROM THE ENGINEER.
4. ALL BEARING PLATE CAPACITIES ARE BASED ON 1-1/16" HOLE, UNLESS NOTED OTHERWISE.
5. SLACKJACK SELECTION NOTES: THE SIZES SHOWN ABOVE ARE FOR BOTH ONE AND TWO INCH TRAVEL ("SJA 4xy") (x = TRAVEL HEIGHT IN INCHES, y = ROD SIZE). TWO INCH TRAVEL SLACKJACKS ARE REQUIRED ON FOURTH WOOD FRAME LEVELS AND HIGHER.
6. THIS TABLE IS FOR REFERENCE OF FULL PRODUCT LINE, SOME ROD AND PLATE SIZES MAY NOT BE IN USE. THE ENGINEER OF RECORD SHALL REVIEW AND APPROVE CAPACITIES.
7. ALL A36/A307 THREADED ROD WILL BE 10' IN LENGTH AND ALL A193 B7 THREADED ROD WILL BE 12' IN LENGTH (U.N.O.)
8. ***CAPACITIES FOR USE AT FIRE TREATED LUMBER SHALL BE OF 95% VALUES LISTED ABOVE.**

DEVICE CAN BE ACTIVATED AS SOON AS IT IS INSTALLED AND HEX NUT TIGHTENED IN PLACE.

SLACKJACK – IAPMO ER-0429 & LABC LISTED CAPACITIES
COLOR CODE AND MODEL/SERIES TO PART NUMBER CROSS REFERENCE

IAPMO ER-0429 /LABC MODEL/SERIES	SLACKJACK PART NO. ON DWGS	THREADED ROD DIAMETER	COMPRESSION CAPACITY	TRAVEL COMPENSATION AMOUNT	CAPTURE RING COLOR	SWIVEL WASHER COLOR
M 100	MJ 100	1/2"	5,000 LBS	1-INCH	RED	N/A
A 210	SJA 215	5/8"	7,360 LBS	1-INCH	BLUE	BLACK
A 210	SJA 216	3/4"	7,360 LBS	1-INCH	BLUE	GRAY
A 210	SJA 217	7/8"	7,360 LBS	1-INCH	BLUE	BLUE
A 210	SJA 218	1"	7,360 LBS	1-INCH	BLUE	YELLOW
A 210	SJA 219	1 1/8"	7,360 LBS	1-INCH	BLUE	WHITE
A 410	SJA 415	5/8"	14,000 LBS	1-INCH	RED	BLACK
A 410	SJA 416	3/4"	14,000 LBS	1-INCH	RED	GRAY
A 410	SJA 417	7/8"	14,000 LBS	1-INCH	RED	BLUE
A 410	SJA 418	1"	14,000 LBS	1-INCH	RED	YELLOW
A 410	SJA 419	1 1/8"	14,000 LBS	1-INCH	RED	WHITE
A 410	SJA 4110	1 1/4"	14,000 LBS	1-INCH	RED	GREEN
T 410	SJT 415	5/8"	9,000 LBS	1-INCH	ORANGE	BLACK
T 410	SJT 416	3/4"	9,000 LBS	1-INCH	ORANGE	GRAY
T 410	SJT 417	7/8"	9,000 LBS	1-INCH	ORANGE	BLUE
T 410	SJT 418	1"	9,000 LBS	1-INCH	ORANGE	YELLOW
T 410	SJT 419	1 1/8"	9,000 LBS	1-INCH	ORANGE	WHITE
T 410	SJT 4110	1 1/4"	9,000 LBS	1-INCH	ORANGE	GREEN
HA 710	HJA 717	7/8"	15,650 LBS	1-INCH	PURPLE	BLUE
HA 710	HJA 718	1"	15,650 LBS	1-INCH	PURPLE	YELLOW
HA 710	HJA 719	1 1/8"	15,650 LBS	1-INCH	PURPLE	WHITE
HA 710	HJA 7110	1 1/4"	15,650 LBS	1-INCH	PURPLE	GREEN
HA 710	HJA 7112	1 1/2"	15,650 LBS	1-INCH	PURPLE	RED
HA 720	HJA 727	7/8"	15,590 LBS	2-INCH	GRAY	BLUE
HA 720	HJA 728	1"	15,590 LBS	2-INCH	GRAY	YELLOW
HA 720	HJA 729	1 1/8"	15,590 LBS	2-INCH	GRAY	WHITE
HA 720	HJA 7210	1 1/4"	15,590 LBS	2-INCH	GRAY	GREEN
HA 720	HJA 7212	1 1/2"	15,590 LBS	2-INCH	GRAY	RED
HS 410	HJS 419	1 1/8"	22,000 LBS	1-INCH	BLACK**	WHITE
HS 410	HJS 4110	1 1/4"	22,000 LBS	1-INCH	BLACK**	GREEN
HS 410	HJS 4112	1 1/2"	22,000 LBS	1-INCH	BLACK**	RED
	*SJST4210	1 1/4"	22,000 LBS	1 1/2-INCH	BLACK	GREEN
	*SJST4110	1 1/4"	22,000 LBS	1-INCH	RED	GREEN
	*SJST4112	1 1/2"	22,000 LBS	1-INCH	RED	RED

IAPMO ER-0429 /LABC MODEL/SERIES	SLACKJACK PART NO. ON DWGS	THREADED ROD DIAMETER	COMPRESSION CAPACITY	TRAVEL COMPENSATION AMOUNT	CAPTURE RING COLOR	SWIVEL WASHER COLOR
M 200	MJ 200	1/2"	4,900 LBS	2-INCH	ORANGE	N/A
A 220	SJA 225	5/8"	7,730 LBS	2-INCH	YELLOW	BLACK
A 220	SJA 226	3/4"	7,730 LBS	2-INCH	YELLOW	GRAY
A 220	SJA 227	7/8"	7,730 LBS	2-INCH	YELLOW	BLUE
A 220	SJA 228	1"	7,730 LBS	2-INCH	YELLOW	YELLOW
A 220	SJA 229	1 1/8"	7,730 LBS	2-INCH	YELLOW	WHITE
A 420	SJA 425	5/8"	14,000 LBS	2-INCH	GREEN	BLACK
A 420	SJA 426	3/4"	14,000 LBS	2-INCH	GREEN	GRAY
A 420	SJA 427	7/8"	14,000 LBS	2-INCH	GREEN	BLUE
A 420	SJA 428	1"	14,000 LBS	2-INCH	GREEN	YELLOW
A 420	SJA 429	1 1/8"	14,000 LBS	2-INCH	GREEN	WHITE
A 420	SJA 4210	1 1/4"	14,000 LBS	2-INCH	GREEN	GREEN
A 610	SJA 616	3/4"	20,340 LBS	1-INCH	TAN	GRAY
A 610	SJA 617	7/8"	20,340 LBS	1-INCH	TAN	BLUE
A 610	SJA 618	1"	20,340 LBS	1-INCH	TAN	YELLOW
A 610	SJA 619	1 1/8"	20,340 LBS	1-INCH	TAN	WHITE
A 610	SJA 6110	1 1/4"	20,340 LBS	1-INCH	TAN	GREEN
A 620	SJA 627	7/8"	20,100 LBS	2-INCH	WHITE	BLUE
A 620	SJA 628	1"	20,100 LBS	2-INCH	WHITE	YELLOW
A 620	SJA 629	1 1/8"	20,100 LBS	2-INCH	WHITE	WHITE
A 620	SJA 6210	1 1/4"	20,100 LBS	2-INCH	WHITE	GREEN
HS 420	HJS 429	1 1/8"	22,000 LBS	2-INCH	BLACK**	WHITE
HS 420	HJS 4210	1 1/4"	22,000 LBS	2-INCH	BLACK**	GREEN
HS 420	HJS 4212	1 1/2"	22,000 LBS	2-INCH	BLACK**	RED
HS 710	HJS 719	1 1/8"	39,190 LBS	1-INCH	BLACK**	WHITE
HS 710	HJS 7110	1 1/4"	39,190 LBS	1-INCH	BLACK**	GREEN
HS 710	HJS 7112	1 1/2"	39,190 LBS	1-INCH	BLACK**	RED
HS 720	HJS 729	1 1/8"	37,770 LBS	2-INCH	BLACK**	WHITE
HS 720	HJS 7210	1 1/4"	37,770 LBS	2-INCH	BLACK**	GREEN
HS 720	HJS 7212	1 1/2"	37,770 LBS	2-INCH	BLACK**	RED

* SLACKJACK TAKE UP DEVICE WITH ΔR = 0.003 IN. NOT SHOWN IN ER-0429.
** OUTSIDE CYLINDER COLOR AS FOLLOW: HJS41=BLUE, HJS42=YELLOW, HJS71=GREEN, HJS72=ORANGE

SLACKJACK COLOR CODE TABLE
TRAVEL HEIGHT AND ROD SIZE COORDINATION

SJA 428
MODEL: SLACKJACK
MODEL TYPE: A=ALUM, S=STEEL
ROD DIA IN EIGHTH INCH
TRAVEL IN INCHES
SERIES TYPE (# RINGS)

COLLECTOR STUD CAPACITY SCHEDULES

COLLECTOR STUD CAPACITIES FOR DOUG FIR STUDS ON DOUG FIR PLATES

TOTAL STUDS REQUIRED QTY.	PLAN VIEW	9'-2" CAPACITY ** 2x4 STUDS	2x6 STUDS	4x4 POSTS	4x6 POSTS	4x8 POSTS	6x6 POSTS	4'-6"/6'-0" CAPACITY BRIDGE TRIMMERS ONLY NO. OF BRIDGE TRIMMERS	2x4s	2x6s
SINGLE CAPACITY:		2,640#	5,156#	6,561#	10,285#	13,521#	18,906#		3,281#	5,156#
2		5,280#	10,313#	13,123#	20,571#	27,042#	37,813#	2*	6,563#	10,313#
3		7,920#	15,469#	19,684#	30,856#	40,562#	56,719#			
4		10,560#	20,625#	26,245#	41,141#	54,083#	75,625#	4*	13,125#	20,625#
5		13,200#	25,781#	32,807#	51,426#	67,604#	94,531#			
6		15,840#	30,938#	39,368#	61,712#	81,125#	113,438#	6*	19,688#	30,938#
7		18,480#	36,094#	45,929#	71,997#	94,645#	132,344#			
8		21,120#	41,250#	52,491#	82,282#	108,166#	151,250#	8*	26,250#	41,250#
9		23,760#	46,406#	59,052#	92,567#	121,687#	170,156#			
10		26,400#	51,563#	65,613#	102,853#	135,208#	189,063#			

NOTES:
1) STUDS SHOWN ARE THE MINIMUM COMPRESSION MEMBERS REQUIRED FOR THE EARTHBOUND SYSTEM.
2) DOUG FIR CALCULATION NOTES: (BASED ON 2018 NDS) 2x4s, 2x6s, 3x4s (NO. 2 GRADE): F'c PARALLEL = 1350 PSI 4x4s, AND LARGER (NO. 1 GRADE): F'c PARALLEL = 1500 PSI F'c PERPENDICULAR = 625 PSI FOR DOUG FIR PLATES.
3) * DENOTES NO. OF BRIDGE TRIMMERS UNDER COMPRESSION BRIDGE.
4) ** DENOTES THAT FINAL POST HEIGHT SUBTRACTS 4 1/2" FOR 2x TOP PLATES AND 2x BOTTOM PLATE.
4) SEE EARTHBOUND CALCULATIONS PACKAGE FOR 10'-0" STUD HEIGHT CAPACITIES.
5) **CAPACITIES OF FIRE RETARDANT TREATED MEMBERS SHALL BE 95% OF VALUES STATED ABOVE.**
6) **SEE EARTHBOUND CALCULATIONS FOR 10'-0" STUD HEIGHT CAPACITIES.**

TYP. P– PLATE ORIENTATION & SAMPLE BRIDGE TRIMMER NAILING DETAIL
SCALE: NONE

ROD HOLE SCHEDULE THROUGH TOP/BOTTOM PLATES AND BRIDGES			
ROD SIZE		MIN HOLE SIZE	MAX HOLE SIZE
R4	1/2"ø	1"ø	1-1/8"ø
R5	5/8"ø	1"ø	1-1/8"ø
R6	3/4"ø	1"ø	1-1/8"ø
R7	7/8"ø	1-1/8"ø	1-1/4"ø
R8	1"ø	1-1/4"ø	1-3/8"ø
R9	1-1/8"ø	1-3/8"ø	* 1-1/2"ø
R10	1-1/4"ø	* 1-1/2"ø	* 1-5/8"ø
R12	1-1/2"ø	* 1-3/4"ø	* 1-7/8"ø

* HOLE SIZES INTENDED FOR 6" WALL TYPES ONLY. ENGINEER OF RECORD SHALL APPROVE THE USE OF THESE HOLE SIZES FOR 4" WALL TYPES.

ALL SHEAR PANEL NAIL SPACING IS PER THE SHEAR WALL SCHEDULE

NOTE: SEE SHOP DRAWING GENERAL NOTES FOR NAILING REQUIREMENTS WHEN POSTS ARE USED.

NAILING SAMPLE

PATENTS AND PATENTS PENDING. For more information about the Earthbound Holdown System, visit http://www.holdown.com Copyright © 2022, Earthbound Corporation, All Rights Reserved.

REVISIONS

NO.	DATE	DESCRIPTION

DRAWN: MS
DESIGNED: KT
CHECKED: KT
APPROVED: WMN

REGISTERED PROFESSIONAL ENGINEER WILLIAM M. NELSON No. 3417 Exp. 3-31-24 STRUCTURAL STATE OF CALIFORNIA

PROJECT: 2700 INTERNATIONAL
2700 INTERNATIONAL BLVD, OAKLAND, CA 94601

EARTHBOUND 'Holdowns That Work'

EARTHBOUND CORPORATION
17361 Tye Street SE
Monroe, WA 98272
http://www.holdown.com
(800) 944-5669
Fax (360) 863-0722

CONTACT: EARTHBOUND 800-944-5669

EB CORP JOB NO: **23063**

SHEET TITLE: EARTHBOUND SEISMIC HOLDOWN SYSTEM INSTALLATION DRAWINGS IAPMO ER-0429

DATE: 12/02/2022

SHEET NO. **EB-1**

2700 INTERNATIONAL_1.dwg
December 2, 2022 at 11:38 AM

12/7/2022 5:05:55 PM

PYATOK
1611 TELEGRAPH AVE.
SUITE 200
OAKLAND, CA 94612
T. 510.465.7010 | F. 510.465.8575
www.pyatok.com

element structural engineers, inc.
39675 Cedar Blvd., Suite 295C
Newark, California 94560
Tel: 510.573.1557
eFax: 973.924.0663
www.elementse.com

Owner

2700 INTERNATIONAL
OAKLAND, CA 94601

STAMP:

SIGNED DATE: 12/09/2022

ISSUE SCHEDULE

NO.	ISSUE	DATE
	100% SD	5/11/2022
	50% DD	7/15/2022
	100% DD	9/16/2022
	50% CD	11/18/2022
	PERMIT SET	12/09/2022

REVISION SCHEDULE

NO.	ISSUE	DATE

JOB NUMBER: ESE# 3395
DRAWN BY: YL/BDT
CHECKED BY: JTE
ISSUE DATE: 12/09/2022
SCALE:
TITLE: **EARTHBOUND DETAILS**

SHEET: **S5.11**

PRELIMINARY - Not for Construction -

© 2019 PYATOK ARCHITECTURE & URBAN DESIGN

HOLDOWN RUN DETAILS

RUN TYPE 1A

WOOD FLOOR LEVEL	UPLIFT TENSION LOADS	CALCULATED DIFFERENTIAL LOADS	COLLECTED DIFFERENTIAL LOADS	WOOD COMPRESSION DOWNLOAD	TOTAL ALLOWED SYSTEM ELONGATION
5th	-----	-----	-----	-----	-----
4th	-----	-----	-----	-----	-----
3rd	-----	-----	-----	-----	-----
2nd	-----	-----	-----	-----	-----
1st	12,000 LBS	12,000 LBS	12,000 LBS	16,000 LBS	0.142 in

RUN TYPE 1B

WOOD FLOOR LEVEL	UPLIFT TENSION LOADS	CALCULATED DIFFERENTIAL LOADS	COLLECTED DIFFERENTIAL LOADS	WOOD COMPRESSION DOWNLOAD	TOTAL ALLOWED SYSTEM ELONGATION
5th	-----	-----	-----	-----	-----
4th	-----	-----	-----	-----	-----
3rd	-----	-----	-----	-----	-----
2nd	-----	-----	-----	-----	-----
1st	19,000 LBS	19,000 LBS	19,000 LBS	19,000 LBS	0.153 in

RUN TYPE 1C

WOOD FLOOR LEVEL	UPLIFT TENSION LOADS	CALCULATED DIFFERENTIAL LOADS	COLLECTED DIFFERENTIAL LOADS	WOOD COMPRESSION DOWNLOAD	TOTAL ALLOWED SYSTEM ELONGATION
5th	-----	-----	-----	-----	-----
4th	-----	-----	-----	-----	-----
3rd	-----	-----	-----	-----	-----
1st	39,000 LBS	39,000 LBS	19,500 LBS 19,500 LBS	39,000 LBS	0.048 in 0.081 in

RUN TYPE 2A

WOOD FLOOR LEVEL	UPLIFT TENSION LOADS	CALCULATED DIFFERENTIAL LOADS	COLLECTED DIFFERENTIAL LOADS	WOOD COMPRESSION DOWNLOAD	TOTAL ALLOWED SYSTEM ELONGATION
5th	-----	-----	-----	-----	-----
4th	-----	-----	-----	-----	-----
3rd	-----	-----	-----	-----	-----
2nd	2,000 LBS	2,000 LBS	2,000 LBS	3,000 LBS	0.072 in
1st	5,000 LBS	3,000 LBS	3,000 LBS	6,000 LBS	0.128 in

RUN TYPE 2B

WOOD FLOOR LEVEL	UPLIFT TENSION LOADS	CALCULATED DIFFERENTIAL LOADS	COLLECTED DIFFERENTIAL LOADS	WOOD COMPRESSION DOWNLOAD	TOTAL ALLOWED SYSTEM ELONGATION
5th	-----	-----	-----	-----	-----
4th	-----	-----	-----	-----	-----
3rd	-----	-----	-----	-----	-----
2nd	5,000 LBS	5,000 LBS	5,000 LBS	7,000 LBS	0.100 in
1st	10,000 LBS	5,000 LBS	5,000 LBS	13,000 LBS	0.167 in

RUN TYPE 2C

WOOD FLOOR LEVEL	UPLIFT TENSION LOADS	CALCULATED DIFFERENTIAL LOADS	COLLECTED DIFFERENTIAL LOADS	WOOD COMPRESSION DOWNLOAD	TOTAL ALLOWED SYSTEM ELONGATION
5th	-----	-----	-----	-----	-----
4th	-----	-----	-----	-----	-----
3rd	-----	-----	-----	-----	-----
2nd	10,000 LBS	10,000 LBS	10,000 LBS	15,000 LBS	0.143 in
1st	13,000 LBS	3,000 LBS	3,000 LBS	17,000 LBS	0.148 in

RUN TYPE 2D

WOOD FLOOR LEVEL	UPLIFT TENSION LOADS	CALCULATED DIFFERENTIAL LOADS	COLLECTED DIFFERENTIAL LOADS	WOOD COMPRESSION DOWNLOAD	TOTAL ALLOWED SYSTEM ELONGATION
5th	-----	-----	-----	-----	-----
4th	-----	-----	-----	-----	-----
3rd	-----	-----	-----	-----	-----
2nd	7,000 LBS	7,000 LBS	7,000 LBS	8,000 LBS	0.135 in
1st	14,000 LBS	7,000 LBS	7,000 LBS	14,000 LBS	0.175 in

RUN TYPE 2E

WOOD FLOOR LEVEL	UPLIFT TENSION LOADS	CALCULATED DIFFERENTIAL LOADS	COLLECTED DIFFERENTIAL LOADS	WOOD COMPRESSION DOWNLOAD	TOTAL ALLOWED SYSTEM ELONGATION
5th	-----	-----	-----	-----	-----
4th	-----	-----	-----	-----	-----
3rd	-----	-----	-----	-----	-----
2nd	10,000 LBS	10,000 LBS	10,000 LBS	10,000 LBS	0.143 in
1st	19,000 LBS	9,000 LBS	9,000 LBS	19,000 LBS	0.191 in

NOTES:

1. CONSIDER ROD LENGTH REQUIREMENTS BEFORE CUTTING LOWER LEVEL RODS.
2. PROTECTIVE PLASTIC SLEEVES SHALL BE USED WHERE ROD PENETRATES THROUGH FIRE RETARDANT TREATED LUMBER, SEE DETAIL A/EB-4. EXCEPTION: SOME FIRE RETARDANT TREATED WOOD PRODUCTS ARE CORROSION RESISTANT THEREFORE, SLEEVES ARE NOT NEEDED. PLEASE SUBMIT A LETTER FROM MANUFACTURER OF THE FIRE TREATED WOOD PRODUCT STATING CORROSION FASTENERS ARE NOT REQUIRED FOR EOR TO REVIEW AND APPROVE.

NOTE:
THIS HOLDOWN RUN SHALL HAVE THE COMPRESSION BRIDGE MOUNTED 6'-0" MIN. FROM FLOOR PLATE. THE BRIDGE (TRIMMER) STUDS SHALL HAVE PANEL EDGE NAILING AT 3" O.C. SPACING.
COMPRESSION BRIDGE SHALL BE TIMBERSTRAND LSL OR APPROVED EQUAL. AT F.R.T. WALL USE 6x8 BRIDGE BLOCK IN LIEU TIMBERSTRAND LSL.

F INDICATES ADD ADDITIONAL 2x AT F.R.T.

(G/GS) INDICATES TAPPED COUPLER ON ONE END TO RECEIVE H.D.G. ANCHOR IF APPLICABLE.

1A

NOTE:
THIS HOLDOWN RUN SHALL HAVE THE COMPRESSION BRIDGE MOUNTED 6'-0" MIN. FROM FLOOR PLATE. THE BRIDGE (TRIMMER) STUDS SHALL HAVE PANEL EDGE NAILING AT 3" O.C. SPACING.
COMPRESSION BRIDGE SHALL BE TIMBERSTRAND LSL OR APPROVED EQUAL. AT F.R.T. WALL USE 6x8 BRIDGE BLOCK IN LIEU TIMBERSTRAND LSL.

(G/GS) INDICATES TAPPED COUPLER ON ONE END TO RECEIVE H.D.G. ANCHOR IF APPLICABLE.

1B

NOTE:
1. THIS IS A 1-STORY RUN WITH 39.0 KIPS TENSION DISTRIBUTED OVER TWO BEARING PLATES.

(G/GS) INDICATES TAPPED COUPLER ON ONE END TO RECEIVE H.D.G. ANCHOR IF APPLICABLE.

1C

(G/GS) INDICATES TAPPED COUPLER ON ONE END TO RECEIVE H.D.G. ANCHOR IF APPLICABLE.

2A

F INDICATES ADD ADDITIONAL 2x AT F.R.T.

(G/GS) INDICATES TAPPED COUPLER ON ONE END TO RECEIVE H.D.G. ANCHOR IF APPLICABLE.

2B

NOTE:
THIS HOLDOWN RUN SHALL HAVE THE COMPRESSION BRIDGE MOUNTED 6'-0" MIN. FROM FLOOR PLATE. THE BRIDGE (TRIMMER) STUDS SHALL HAVE PANEL EDGE NAILING AT 3" O.C. SPACING.

F INDICATES ADD ADDITIONAL 2x AT F.R.T.

(G/GS) INDICATES TAPPED COUPLER ON ONE END TO RECEIVE H.D.G. ANCHOR IF APPLICABLE.

2C

NOTE:
THIS HOLDOWN RUN SHALL HAVE THE COMPRESSION BRIDGE MOUNTED 6'-0" MIN. FROM FLOOR PLATE. THE BRIDGE (TRIMMER) STUDS SHALL HAVE PANEL EDGE NAILING AT 3" O.C. SPACING.

F INDICATES ADD ADDITIONAL 2x AT F.R.T.

(G/GS) INDICATES TAPPED COUPLER ON ONE END TO RECEIVE H.D.G. ANCHOR IF APPLICABLE.

2D

NOTE:
THIS HOLDOWN RUN SHALL HAVE THE COMPRESSION BRIDGE MOUNTED 6'-0" MIN. FROM FLOOR PLATE. THE BRIDGE (TRIMMER) STUDS SHALL HAVE PANEL EDGE NAILING AT 3" O.C. SPACING.

F INDICATES ADD ADDITIONAL 2x AT F.R.T.

(G/GS) INDICATES TAPPED COUPLER ON ONE END TO RECEIVE H.D.G. ANCHOR IF APPLICABLE.

2E

RUN TYPE 2F

WOOD FLOOR LEVEL	UPLIFT TENSION LOADS	CALCULATED DIFFERENTIAL LOADS	COLLECTED DIFFERENTIAL LOADS	WOOD COMPRESSION DOWNLOAD	TOTAL ALLOWED SYSTEM ELONGATION
5th	-----	-----	-----	-----	-----
4th	-----	-----	-----	-----	-----
3rd	-----	-----	-----	-----	-----
2nd	11,000 LBS	11,000 LBS	11,000 LBS	11,000 LBS	0.137 in
1st	20,000 LBS	9,000 LBS	9,000 LBS	20,000 LBS	0.171 in

RUN TYPE 3A

WOOD FLOOR LEVEL	UPLIFT TENSION LOADS	CALCULATED DIFFERENTIAL LOADS	COLLECTED DIFFERENTIAL LOADS	WOOD COMPRESSION DOWNLOAD	TOTAL ALLOWED SYSTEM ELONGATION
5th	-----	-----	-----	-----	-----
4th	-----	-----	-----	-----	-----
3rd	3,000 LBS	3,000 LBS	3,000 LBS	3,000 LBS	0.092 in
2nd	5,000 LBS	2,000 LBS	2,000 LBS	5,000 LBS	0.116 in
1st	7,000 LBS	2,000 LBS	2,000 LBS	7,000 LBS	0.152 in

RUN TYPE 3B

WOOD FLOOR LEVEL	UPLIFT TENSION LOADS	CALCULATED DIFFERENTIAL LOADS	COLLECTED DIFFERENTIAL LOADS	WOOD COMPRESSION DOWNLOAD	TOTAL ALLOWED SYSTEM ELONGATION
5th	-----	-----	-----	-----	-----
4th	-----	-----	-----	-----	-----
3rd	5,000 LBS	5,000 LBS	5,000 LBS	5,000 LBS	0.100 in
2nd	8,000 LBS	3,000 LBS	3,000 LBS	8,000 LBS	0.128 in
1st	14,000 LBS	6,000 LBS	6,000 LBS	14,000 LBS	0.181 in

RUN TYPE 3C

WOOD FLOOR LEVEL	UPLIFT TENSION LOADS	CALCULATED DIFFERENTIAL LOADS	COLLECTED DIFFERENTIAL LOADS	WOOD COMPRESSION DOWNLOAD	TOTAL ALLOWED SYSTEM ELONGATION
5th	-----	-----	-----	-----	-----
4th	-----	-----	-----	-----	-----
3rd	8,000 LBS	8,000 LBS	8,000 LBS	8,000 LBS	0.135 in
2nd	12,000 LBS	4,000 LBS	4,000 LBS	12,000 LBS	0.139 in
1st	19,000 LBS	7,000 LBS	7,000 LBS	20,000 LBS	0.177 in

RUN TYPE 3D

WOOD FLOOR LEVEL	UPLIFT TENSION LOADS	CALCULATED DIFFERENTIAL LOADS	COLLECTED DIFFERENTIAL LOADS	WOOD COMPRESSION DOWNLOAD	TOTAL ALLOWED SYSTEM ELONGATION
5th	-----	-----	-----	-----	-----
4th	-----	-----	-----	-----	-----
3rd	11,000 LBS	11,000 LBS	11,000 LBS	19,000 LBS	0.137 in
2nd	18,000 LBS	7,000 LBS	7,000 LBS	19,000 LBS	0.164 in
1st	19,000 LBS	1,000 LBS	1,000 LBS	19,000 LBS	0.146 in

RUN TYPE 3E

WOOD FLOOR LEVEL	UPLIFT TENSION LOADS	CALCULATED DIFFERENTIAL LOADS	COLLECTED DIFFERENTIAL LOADS	WOOD COMPRESSION DOWNLOAD	TOTAL ALLOWED SYSTEM ELONGATION
5th	-----	-----	-----	-----	-----
4th	-----	-----	-----	-----	-----
3rd	14,000 LBS	14,000 LBS	14,000 LBS	14,000 LBS	0.143 in
2nd	24,000 LBS	10,000 LBS	10,000 LBS	24,000 LBS	0.179 in
1st	37,000 LBS	13,000 LBS	13,000 LBS	37,000 LBS	0.169 in

RUN TYPE 4A

WOOD FLOOR LEVEL	UPLIFT TENSION LOADS	CALCULATED DIFFERENTIAL LOADS	COLLECTED DIFFERENTIAL LOADS	WOOD COMPRESSION DOWNLOAD	TOTAL ALLOWED SYSTEM ELONGATION
5th	-----	-----	-----	-----	-----
4th	4,000 LBS	4,000 LBS	4,000 LBS	8,000 LBS	0.116 in
3rd	9,000 LBS	5,000 LBS	5,000 LBS	10,000 LBS	0.158 in
2nd	9,000 LBS	-----	-----	12,000 LBS	0.120 in
1st	12,000 LBS	3,000 LBS	3,000 LBS	16,000 LBS	0.140 in

RUN TYPE 4B

WOOD FLOOR LEVEL	UPLIFT TENSION LOADS	CALCULATED DIFFERENTIAL LOADS	COLLECTED DIFFERENTIAL LOADS	WOOD COMPRESSION DOWNLOAD	TOTAL ALLOWED SYSTEM ELONGATION
5th	-----	-----	-----	-----	-----
4th	4,000 LBS	4,000 LBS	4,000 LBS	5,000 LBS	0.116 in
3rd	8,000 LBS	4,000 LBS	4,000 LBS	9,000 LBS	0.141 in
2nd	12,000 LBS	4,000 LBS	4,000 LBS	14,000 LBS	0.139 in
1st	17,000 LBS	5,000 LBS	5,000 LBS	20,000 LBS	0.159 in

NOTE:
THIS HOLDOWN RUN SHALL HAVE THE COMPRESSION BRIDGE MOUNTED 6'-0" MIN. FROM FLOOR PLATE. THE BRIDGE (TRIMMER) STUDS SHALL HAVE PANEL EDGE NAILING AT 3" O.C. SPACING.

F INDICATES ADD ADDITIONAL 2x AT F.R.T.

(G/GS) INDICATES TAPPED COUPLER ON ONE END TO RECEIVE H.D.G. ANCHOR IF APPLICABLE.

2F

(G/GS) INDICATES TAPPED COUPLER ON ONE END TO RECEIVE H.D.G. ANCHOR IF APPLICABLE.

3A

F INDICATES ADD ADDITIONAL 2x AT F.R.T.

(G/GS) INDICATES TAPPED COUPLER ON ONE END TO RECEIVE H.D.G. ANCHOR IF APPLICABLE.

3B

NOTE:
THIS HOLDOWN RUN SHALL HAVE THE COMPRESSION BRIDGE MOUNTED 6'-0" MIN. FROM FLOOR PLATE. THE BRIDGE (TRIMMER) STUDS SHALL HAVE PANEL EDGE NAILING AT 3" O.C. SPACING.

F INDICATES ADD ADDITIONAL 2x AT F.R.T.

(G/GS) INDICATES TAPPED COUPLER ON ONE END TO RECEIVE H.D.G. ANCHOR IF APPLICABLE.

3C

NOTE:
THIS HOLDOWN RUN SHALL HAVE THE COMPRESSION BRIDGE MOUNTED 6'-0" MIN. FROM FLOOR PLATE. THE BRIDGE (TRIMMER) STUDS SHALL HAVE PANEL EDGE NAILING AT 3" O.C. SPACING.

F INDICATES ADD ADDITIONAL 2x AT F.R.T.

(G/GS) INDICATES TAPPED COUPLER ON ONE END TO RECEIVE H.D.G. ANCHOR IF APPLICABLE.

3D

NOTE:
THIS HOLDOWN RUN SHALL HAVE THE COMPRESSION BRIDGE MOUNTED 6'-0" MIN. FROM FLOOR PLATE. THE BRIDGE (TRIMMER) STUDS SHALL HAVE PANEL EDGE NAILING AT 3" O.C. SPACING.
COMPRESSION BRIDGE SHALL BE TIMBERSTRAND LSL OR APPROVED EQUAL. AT F.R.T. WALL USE 6x8 BRIDGE BLOCK IN LIEU TIMBERSTRAND LSL.

F INDICATES ADD ADDITIONAL 2x AT F.R.T.

(G/GS) INDICATES TAPPED COUPLER ON ONE END TO RECEIVE H.D.G. ANCHOR IF APPLICABLE.

3E

F INDICATES ADD ADDITIONAL 2x AT F.R.T.

(G/GS) INDICATES TAPPED COUPLER ON ONE END TO RECEIVE H.D.G. ANCHOR IF APPLICABLE.

4A

F INDICATES ADD ADDITIONAL 2x AT F.R.T.

(G/GS) INDICATES TAPPED COUPLER ON ONE END TO RECEIVE H.D.G. ANCHOR IF APPLICABLE.

4B

PATENTS AND PATENTS PENDING. For more information about the Earthbound Holdown System, visit http://www.holdown.com Copyright © 2022, Earthbound Corporation, All Rights Reserved.

2700 INTERNATIONAL_2.DWG
December 2, 2022 at 11:38 AM

REVISIONS

NO.	DATE	DESCRIPTION

DRAWN: MS
DESIGNED: KT
CHECKED: KT
APPROVED: WMN

REGISTERED PROFESSIONAL ENGINEER WILLIAM M. NELSON No. 3417 Exp. 3-31-24 STRUCTURAL STATE OF CALIFORNIA

PROJECT: 2700 INTERNATIONAL
2700 INTERNATIONAL BLVD, OAKLAND, CA 94601

EARTHBOUND "Holdowns That Work"
EARTHBOUND CORPORATION
17361 Tye Street SE
Monroe, WA 98272
http://www.holdown.com
(800) 944-5669
Fax (360) 863-0722

EB CORP JOB NO: 23063

SHEET TITLE:
EARTHBOUND SEISMIC HOLDOWN SYSTEM INSTALLATION DRAWINGS IAPMO ER-0429

DATE: 12/02/2022

SHEET NO. **EB-2**

CONTACT: EARTHBOUND 800-944-5669

PYATOK
1611 TELEGRAPH AVE.
SUITE 200
OAKLAND, CA 94612
T. 510.465.7010 | F. 510.465.8575
www.pyatok.com

element structural engineers, inc.
39675 Cedar Blvd., Suite 295C
Newark, California 94560
Tel: 510.573.1557
eFax: 973.924.0663
www.elementse.com

Owner

2700 INTERNATIONAL
OAKLAND, CA 94601

STAMP:

SIGNED DATE: 12/09/2022

ISSUE SCHEDULE

NO.	ISSUE	DATE
	100% SD	5/11/2022
	50% DD	7/15/2022
	100% DD	9/16/2022
	50% CD	11/18/2022
	PERMIT SET	12/09/2022

REVISION SCHEDULE

NO.	ISSUE	DATE

JOB NUMBER: ESE# 3395
DRAWN BY: YL/BDT
CHECKED BY: JTE
ISSUE DATE: 12/09/2022
SCALE:
TITLE: **EARTHBOUND DETAILS**

SHEET: **S5.12**

PRELIMINARY - Not for Construction -

© 2019 PYATOK ARCHITECTURE & URBAN DESIGN

12/7/2022 5:06:07 PM

HOLDOWN RUN DETAILS

NOTES:

1. CONSIDER ROD LENGTH REQUIREMENTS BEFORE CUTTING LOWER LEVEL RODS.
2. PROTECTIVE PLASTIC SLEEVES SHALL BE USED WHERE ROD PENETRATES THROUGH FIRE RETARDANT TREATED LUMBER, SEE DETAIL A/EB-4. EXCEPTION: SOME FIRE RETARDANT TREATED WOOD PRODUCTS ARE CORROSION RESISTANT THEREFORE, SLEEVES ARE NOT NEEDED. PLEASE SUBMIT A LETTER FROM MANUFACTURER OF THE FIRE TREATED WOOD PRODUCT STATING CORROSION FASTENERS ARE NOT REQUIRED FOR EOR TO REVIEW AND APPROVE.

RUN TYPE 4C

WOOD FLOOR LEVEL	UPLIFT TENSION LOADS	CALCULATED DIFFERENTIAL LOADS	COLLECTED DIFFERENTIAL LOADS	WOOD COMPRESSION DOWNLOAD	TOTAL ALLOWED SYSTEM ELONGATION
5th	-----	-----	-----	-----	-----
4th	9,000 LBS	9,000 LBS	9,000 LBS	10,000 LBS	0.141 in
3rd	17,000 LBS	8,000 LBS	8,000 LBS	19,000 LBS	0.174 in
2nd	21,000 LBS	4,000 LBS	4,000 LBS	24,000 LBS	0.137 in
1st	28,000 LBS	7,000 LBS	7,000 LBS	32,000 LBS	0.174 in

NOTE:
THIS HOLDOWN RUN SHALL HAVE THE COMPRESSION BRIDGE MOUNTED 6'-0" MIN. FROM FLOOR PLATE. THE BRIDGE (TRIMMER) STUDS SHALL HAVE PANEL EDGE NAILING AT 3" O.C. SPACING.

F INDICATES ADD ADDITIONAL 2x AT F.R.T.

(G/GS) INDICATES TAPPED COUPLER ON ONE END TO RECEIVE H.D.G. ANCHOR IF APPLICABLE.

4C

RUN TYPE 4D

WOOD FLOOR LEVEL	UPLIFT TENSION LOADS	CALCULATED DIFFERENTIAL LOADS	COLLECTED DIFFERENTIAL LOADS	WOOD COMPRESSION DOWNLOAD	TOTAL ALLOWED SYSTEM ELONGATION
5th	-----	-----	-----	-----	-----
4th	16,000 LBS	16,000 LBS	16,000 LBS	16,000 LBS	0.146 in
3rd	31,000 LBS	15,000 LBS	15,000 LBS	31,000 LBS	0.189 in
2nd	41,000 LBS	10,000 LBS	10,000 LBS	41,000 LBS	0.178 in
1st	52,000 LBS	11,000 LBS	11,000 LBS	52,000 LBS	0.181 in

NOTE:
THIS HOLDOWN RUN SHALL HAVE THE COMPRESSION BRIDGE MOUNTED 6'-0" MIN. FROM FLOOR PLATE. THE BRIDGE (TRIMMER) STUDS SHALL HAVE PANEL EDGE NAILING AT 3" O.C. SPACING.
COMPRESSION BRIDGE SHALL BE TIMBERSTRAND LSL OR APPROVED EQUAL.

F INDICATES ADD ADDITIONAL 2x AT F.R.T.

(G/GS) INDICATES TAPPED COUPLER ON ONE END TO RECEIVE H.D.G. ANCHOR IF APPLICABLE.

4D

RUN TYPE 5A

WOOD FLOOR LEVEL	UPLIFT TENSION LOADS	CALCULATED DIFFERENTIAL LOADS	COLLECTED DIFFERENTIAL LOADS	WOOD COMPRESSION DOWNLOAD	TOTAL ALLOWED SYSTEM ELONGATION
5th	2,000 LBS	2,000 LBS	2,000 LBS	3,000 LBS	0.073 in
4th	4,000 LBS	2,000 LBS	2,000 LBS	5,000 LBS	0.138 in
3rd	4,000 LBS	-----	-----	6,000 LBS	0.117 in
2nd	4,000 LBS	-----	-----	8,000 LBS	0.118 in
1st	7,000 LBS	3,000 LBS	3,000 LBS	11,000 LBS	0.158 in

F INDICATES ADD ADDITIONAL 2x AT F.R.T.

(G/GS) INDICATES TAPPED COUPLER ON ONE END TO RECEIVE H.D.G. ANCHOR IF APPLICABLE.

5A

RUN TYPE 5B

WOOD FLOOR LEVEL	UPLIFT TENSION LOADS	CALCULATED DIFFERENTIAL LOADS	COLLECTED DIFFERENTIAL LOADS	WOOD COMPRESSION DOWNLOAD	TOTAL ALLOWED SYSTEM ELONGATION
5th	7,000 LBS	7,000 LBS	7,000 LBS	10,000 LBS	0.144 in
4th	7,000 LBS	-----	-----	10,000 LBS	0.137 in
3rd	7,000 LBS	-----	-----	10,000 LBS	0.137 in
2nd	7,000 LBS	-----	-----	10,000 LBS	0.132 in
1st	7,000 LBS	-----	-----	10,000 LBS	0.140 in

NOTE:
SEE RUN TYPE "4C" FOR HIGH BRIDGE REQUIREMENTS.

F INDICATES ADD ADDITIONAL 2x AT F.R.T.

(G/GS) INDICATES TAPPED COUPLER ON ONE END TO RECEIVE H.D.G. ANCHOR IF APPLICABLE.

5B

RUN TYPE 5C

WOOD FLOOR LEVEL	UPLIFT TENSION LOADS	CALCULATED DIFFERENTIAL LOADS	COLLECTED DIFFERENTIAL LOADS	WOOD COMPRESSION DOWNLOAD	TOTAL ALLOWED SYSTEM ELONGATION
5th	3,000 LBS	3,000 LBS	3,000 LBS	4,000 LBS	0.094 in
4th	4,000 LBS	1,000 LBS	1,000 LBS	5,000 LBS	0.127 in
3rd	5,000 LBS	1,000 LBS	1,000 LBS	8,000 LBS	0.116 in
2nd	7,000 LBS	2,000 LBS	2,000 LBS	10,000 LBS	0.144 in
1st	10,000 LBS	3,000 LBS	3,000 LBS	15,000 LBS	0.155 in

F INDICATES ADD ADDITIONAL 2x AT F.R.T.

(G/GS) INDICATES TAPPED COUPLER ON ONE END TO RECEIVE H.D.G. ANCHOR IF APPLICABLE.

5C

RUN TYPE 5D

WOOD FLOOR LEVEL	UPLIFT TENSION LOADS	CALCULATED DIFFERENTIAL LOADS	COLLECTED DIFFERENTIAL LOADS	WOOD COMPRESSION DOWNLOAD	TOTAL ALLOWED SYSTEM ELONGATION
5th	2,000 LBS	2,000 LBS	2,000 LBS	3,000 LBS	0.073 in
4th	4,000 LBS	2,000 LBS	2,000 LBS	7,000 LBS	0.138 in
3rd	5,000 LBS	1,000 LBS	1,000 LBS	11,000 LBS	0.116 in
2nd	8,000 LBS	3,000 LBS	3,000 LBS	12,000 LBS	0.128 in
1st	14,000 LBS	6,000 LBS	6,000 LBS	18,000 LBS	0.181 in

(G/GS) INDICATES TAPPED COUPLER ON ONE END TO RECEIVE H.D.G. ANCHOR IF APPLICABLE.

5D

RUN TYPE 5E

WOOD FLOOR LEVEL	UPLIFT TENSION LOADS	CALCULATED DIFFERENTIAL LOADS	COLLECTED DIFFERENTIAL LOADS	WOOD COMPRESSION DOWNLOAD	TOTAL ALLOWED SYSTEM ELONGATION
5th	3,000 LBS	3,000 LBS	3,000 LBS	5,000 LBS	0.094 in
4th	7,000 LBS	4,000 LBS	4,000 LBS	9,000 LBS	0.163 in
3rd	13,000 LBS	6,000 LBS	6,000 LBS	16,000 LBS	0.175 in
2nd	13,000 LBS	-----	-----	16,000 LBS	0.123 in
1st	14,000 LBS	1,000 LBS	1,000 LBS	18,000 LBS	0.144 in

(G/GS) INDICATES TAPPED COUPLER ON ONE END TO RECEIVE H.D.G. ANCHOR IF APPLICABLE.

5E

RUN TYPE 5F

WOOD FLOOR LEVEL	UPLIFT TENSION LOADS	CALCULATED DIFFERENTIAL LOADS	COLLECTED DIFFERENTIAL LOADS	WOOD COMPRESSION DOWNLOAD	TOTAL ALLOWED SYSTEM ELONGATION
5th	3,000 LBS	3,000 LBS	3,000 LBS	4,000 LBS	0.094 in
4th	6,000 LBS	3,000 LBS	3,000 LBS	6,000 LBS	0.143 in
3rd	10,000 LBS	4,000 LBS	4,000 LBS	11,000 LBS	0.160 in
2nd	17,000 LBS	7,000 LBS	7,000 LBS	23,000 LBS	0.158 in
1st	19,000 LBS	2,000 LBS	2,000 LBS	23,000 LBS	0.152 in

F INDICATES ADD ADDITIONAL 2x AT F.R.T.

(G/GS) INDICATES TAPPED COUPLER ON ONE END TO RECEIVE H.D.G. ANCHOR IF APPLICABLE.

5F

RUN TYPE 5G

WOOD FLOOR LEVEL	UPLIFT TENSION LOADS	CALCULATED DIFFERENTIAL LOADS	COLLECTED DIFFERENTIAL LOADS	WOOD COMPRESSION DOWNLOAD	TOTAL ALLOWED SYSTEM ELONGATION
5th	5,000 LBS	5,000 LBS	5,000 LBS	4,000 LBS	0.108 in
4th	12,000 LBS	7,000 LBS	7,000 LBS	9,000 LBS	0.162 in
3rd	15,000 LBS	3,000 LBS	3,000 LBS	16,000 LBS	0.135 in
2nd	19,000 LBS	4,000 LBS	4,000 LBS	19,000 LBS	0.155 in
1st	19,000 LBS	-----	-----	19,000 LBS	0.140 in

(G/GS) INDICATES TAPPED COUPLER ON ONE END TO RECEIVE H.D.G. ANCHOR IF APPLICABLE.

5G

RUN TYPE 5H

WOOD FLOOR LEVEL	UPLIFT TENSION LOADS	CALCULATED DIFFERENTIAL LOADS	COLLECTED DIFFERENTIAL LOADS	WOOD COMPRESSION DOWNLOAD	TOTAL ALLOWED SYSTEM ELONGATION
5th	4,000 LBS	4,000 LBS	4,000 LBS	4,000 LBS	0.116 in
4th	8,000 LBS	4,000 LBS	4,000 LBS	8,000 LBS	0.141 in
3rd	14,000 LBS	6,000 LBS	6,000 LBS	14,000 LBS	0.182 in
2nd	20,000 LBS	6,000 LBS	6,000 LBS	20,000 LBS	0.142 in
1st	20,000 LBS	-----	-----	20,000 LBS	0.120 in

F INDICATES ADD ADDITIONAL 2x AT F.R.T.

(G/GS) INDICATES TAPPED COUPLER ON ONE END TO RECEIVE H.D.G. ANCHOR IF APPLICABLE.

5H

RUN TYPE 5I

WOOD FLOOR LEVEL	UPLIFT TENSION LOADS	CALCULATED DIFFERENTIAL LOADS	COLLECTED DIFFERENTIAL LOADS	WOOD COMPRESSION DOWNLOAD	TOTAL ALLOWED SYSTEM ELONGATION
5th	4,000 LBS	4,000 LBS	4,000 LBS	5,000 LBS	0.116 in
4th	8,000 LBS	4,000 LBS	4,000 LBS	9,000 LBS	0.141 in
3rd	13,000 LBS	5,000 LBS	5,000 LBS	13,000 LBS	0.161 in
2nd	17,000 LBS	4,000 LBS	4,000 LBS	18,000 LBS	0.145 in
1st	24,000 LBS	7,000 LBS	7,000 LBS	26,000 LBS	0.176 in

F INDICATES ADD ADDITIONAL 2x AT F.R.T.

(G/GS) INDICATES TAPPED COUPLER ON ONE END TO RECEIVE H.D.G. ANCHOR IF APPLICABLE.

5I

RUN TYPE 5J

WOOD FLOOR LEVEL	UPLIFT TENSION LOADS	CALCULATED DIFFERENTIAL LOADS	COLLECTED DIFFERENTIAL LOADS	WOOD COMPRESSION DOWNLOAD	TOTAL ALLOWED SYSTEM ELONGATION
5th	3,000 LBS	3,000 LBS	3,000 LBS	5,000 LBS	0.094 in
4th	7,000 LBS	4,000 LBS	4,000 LBS	10,000 LBS	0.163 in
3rd	15,000 LBS	8,000 LBS	8,000 LBS	18,000 LBS	0.163 in
2nd	27,000 LBS	12,000 LBS	12,000 LBS	30,000 LBS	0.176 in
1st	27,000 LBS	-----	-----	30,000 LBS	0.132 in

F INDICATES ADD ADDITIONAL 2x AT F.R.T.

(G/GS) INDICATES TAPPED COUPLER ON ONE END TO RECEIVE H.D.G. ANCHOR IF APPLICABLE.

5J

RUN TYPE 5K

WOOD FLOOR LEVEL	UPLIFT TENSION LOADS	CALCULATED DIFFERENTIAL LOADS	COLLECTED DIFFERENTIAL LOADS	WOOD COMPRESSION DOWNLOAD	TOTAL ALLOWED SYSTEM ELONGATION
5th	5,000 LBS	5,000 LBS	5,000 LBS	6,000 LBS	0.108 in
4th	9,000 LBS	4,000 LBS	4,000 LBS	12,000 LBS	0.150 in
3rd	17,000 LBS	8,000 LBS	8,000 LBS	19,000 LBS	0.174 in
2nd	23,000 LBS	6,000 LBS	6,000 LBS	26,000 LBS	0.155 in
1st	30,000 LBS	7,000 LBS	7,000 LBS	32,000 LBS	0.181 in

(G/GS) INDICATES TAPPED COUPLER ON ONE END TO RECEIVE H.D.G. ANCHOR IF APPLICABLE.

5K

RUN TYPE 5L

WOOD FLOOR LEVEL	UPLIFT TENSION LOADS	CALCULATED DIFFERENTIAL LOADS	COLLECTED DIFFERENTIAL LOADS	WOOD COMPRESSION DOWNLOAD	TOTAL ALLOWED SYSTEM ELONGATION
5th	5,000 LBS	5,000 LBS	5,000 LBS	10,000 LBS	0.108 in
4th	10,000 LBS	5,000 LBS	5,000 LBS	12,000 LBS	0.167 in
3rd	18,000 LBS	8,000 LBS	8,000 LBS	19,000 LBS	0.179 in
2nd	28,000 LBS	10,000 LBS	10,000 LBS	28,000 LBS	0.172 in
1st	42,000 LBS	14,000 LBS	14,000 LBS	42,000 LBS	0.190 in

F INDICATES ADD ADDITIONAL 2x AT F.R.T.

(G/GS) INDICATES TAPPED COUPLER ON ONE END TO RECEIVE H.D.G. ANCHOR IF APPLICABLE.

5L

RUN TYPE 5M

WOOD FLOOR LEVEL	UPLIFT TENSION LOADS	CALCULATED DIFFERENTIAL LOADS	COLLECTED DIFFERENTIAL LOADS	WOOD COMPRESSION DOWNLOAD	TOTAL ALLOWED SYSTEM ELONGATION
5th	6,000 LBS	6,000 LBS	6,000 LBS	7,000 LBS	0.140 in
4th	15,000 LBS	9,000 LBS	9,000 LBS	17,000 LBS	0.162 in
3rd	25,000 LBS	10,000 LBS	10,000 LBS	27,000 LBS	0.163 in
2nd	34,000 LBS	9,000 LBS	9,000 LBS	37,000 LBS	0.195 in
1st	41,000 LBS	7,000 LBS	7,000 LBS	40,000 LBS	0.200 in

NOTE:
SEE RUN TYPE "4C" FOR HIGH BRIDGE REQUIREMENTS.

F INDICATES ADD ADDITIONAL 2x AT F.R.T.

(G/GS) INDICATES TAPPED COUPLER ON ONE END TO RECEIVE H.D.G. ANCHOR IF APPLICABLE.

5M

RUN TYPE 5N

WOOD FLOOR LEVEL	UPLIFT TENSION LOADS	CALCULATED DIFFERENTIAL LOADS	COLLECTED DIFFERENTIAL LOADS	WOOD COMPRESSION DOWNLOAD	TOTAL ALLOWED SYSTEM ELONGATION
5th	8,000 LBS	8,000 LBS	8,000 LBS	10,000 LBS	0.135 in
4th	18,000 LBS	10,000 LBS	10,000 LBS	19,000 LBS	0.176 in
3rd	32,000 LBS	14,000 LBS	14,000 LBS	33,000 LBS	0.189 in
2nd	43,000 LBS	11,000 LBS	11,000 LBS	47,000 LBS	0.192 in
1st	58,000 LBS	15,000 LBS	15,000 LBS	65,000 LBS	0.190 in

NOTE:
SEE RUN TYPE "4C" FOR HIGH BRIDGE REQUIREMENTS.

F INDICATES ADD ADDITIONAL 2x AT F.R.T.

(G/GS) INDICATES TAPPED COUPLER ON ONE END TO RECEIVE H.D.G. ANCHOR IF APPLICABLE.

5N

PATENTS AND PATENTS PENDING. For more information about the Earthbound Holdown System, visit http://www.holdown.com Copyright © 2022, Earthbound Corporation, All Rights Reserved.

2700 INTERNATIONAL_3.DWG
December 2, 2022 at 11:38 AM

12/7/2022 5:06:18 PM

REVISIONS
NO. | DATE | DESCRIPTION

DRAWN: MS
DESIGNED: KT
CHECKED: KT
APPROVED: WMN

PROJECT: 2700 INTERNATIONAL
2700 INTERNATIONAL BLVD, OAKLAND, CA 94601

EARTHBOUND 'Holdowns That Work'
EARTHBOUND CORPORATION
17361 Tye Street SE
Monroe, WA 98272
http://www.holdown.com
(800) 944-5669
Fax (360) 863-0722

CONTACT: EARTHBOUND 800-944-5669

EB CORP JOB NO: 23063

SHEET TITLE: EARTHBOUND SEISMIC HOLDOWN SYSTEM INSTALLATION DRAWINGS IAPMO ER-0429

DATE: 12/02/2022

SHEET NO. **EB-3**

PYATOK
1611 TELEGRAPH AVE.
SUITE 200
OAKLAND, CA 94612
T. 510.465.7010 | F. 510.465.8575
www.pyatok.com

element structural engineers, inc.
39675 Cedar Blvd., Suite 295C
Newark, California 94560
Tel: 510.573.1557
eFax: 973.924.0663
www.elementse.com

Owner

2700 INTERNATIONAL
OAKLAND, CA 94601

STAMP:

SIGNED DATE: 12/09/2022

ISSUE SCHEDULE

NO.	ISSUE	DATE
	100% SD	5/11/2022
	50% DD	7/15/2022
	100% DD	9/16/2022
	50% CD	11/18/2022
	PERMIT SET	12/09/2022

REVISION SCHEDULE

NO.	ISSUE	DATE

JOB NUMBER: ESE# 3395
DRAWN BY: YL/BDT
CHECKED BY: JTE
ISSUE DATE: 12/09/2022
SCALE:
TITLE: **EARTHBOUND DETAILS**

SHEET: **S5.13**

PRELIMINARY - Not for Construction -

© 2019 PYATOK ARCHITECTURE & URBAN DESIGN

HOLDOWN RUN DETAILS

RUN TYPE SB1					
WOOD FLOOR LEVEL	UPLIFT TENSION LOADS	CALCULATED DIFFERENTIAL LOADS	COLLECTED DIFFERENTIAL LOADS	WOOD COMPRESSION DOWNLOAD	TOTAL ALLOWED SYSTEM ELONGATION
5th	2,000 LBS	2,000 LBS	2,000 LBS	3,000 LBS	0.073 in
4th	5,000 LBS	3,000 LBS	3,000 LBS	6,000 LBS	0.129 in
3rd	9,000 LBS	4,000 LBS	4,000 LBS	10,000 LBS	0.143 in
2nd	14,000 LBS	5,000 LBS	5,000 LBS	19,000 LBS	0.160 in
1st	-----	-----	-----	-----	-----

RUN TYPE SB2					
WOOD FLOOR LEVEL	UPLIFT TENSION LOADS	CALCULATED DIFFERENTIAL LOADS	COLLECTED DIFFERENTIAL LOADS	WOOD COMPRESSION DOWNLOAD	TOTAL ALLOWED SYSTEM ELONGATION
5th	4,000 LBS	4,000 LBS	4,000 LBS	6,000 LBS	0.116 in
4th	8,000 LBS	4,000 LBS	4,000 LBS	10,000 LBS	0.141 in
3rd	14,000 LBS	6,000 LBS	6,000 LBS	16,000 LBS	0.173 in
2nd	21,000 LBS	7,000 LBS	7,000 LBS	23,000 LBS	0.155 in
1st	-----	-----	-----	-----	-----

RUN TYPE SB3					
WOOD FLOOR LEVEL	UPLIFT TENSION LOADS	CALCULATED DIFFERENTIAL LOADS	COLLECTED DIFFERENTIAL LOADS	WOOD COMPRESSION DOWNLOAD	TOTAL ALLOWED SYSTEM ELONGATION
5th	5,000 LBS	5,000 LBS	5,000 LBS	6,000 LBS	0.108 in
4th	11,000 LBS	6,000 LBS	6,000 LBS	11,000 LBS	0.161 in
3rd	19,000 LBS	8,000 LBS	8,000 LBS	19,000 LBS	0.184 in
2nd	28,000 LBS	9,000 LBS	9,000 LBS	30,000 LBS	0.175 in
1st	-----	-----	-----	-----	-----

RUN TYPE SB4					
WOOD FLOOR LEVEL	UPLIFT TENSION LOADS	CALCULATED DIFFERENTIAL LOADS	COLLECTED DIFFERENTIAL LOADS	WOOD COMPRESSION DOWNLOAD	TOTAL ALLOWED SYSTEM ELONGATION
5th	2,000 LBS	2,000 LBS	2,000 LBS	5,000 LBS	0.072 in
4th	-----	-----	-----	-----	-----
3rd	-----	-----	-----	-----	-----
2nd	-----	-----	-----	-----	-----
1st	-----	-----	-----	-----	-----

F INDICATES ADD ADDITIONAL 2x AT F.R.T.

SB1

F INDICATES ADD ADDITIONAL 2x AT F.R.T.

SB2

F INDICATES ADD ADDITIONAL 2x AT F.R.T.

SB3

SB4

NOTES:
1. CONSIDER ROD LENGTH REQUIREMENTS BEFORE CUTTING LOWER LEVEL RODS.
2. PROTECTIVE PLASTIC SLEEVES SHALL BE USED WHERE ROD PENETRATES THROUGH FIRE RETARDANT TREATED LUMBER, SEE DETAIL A/EB-4.
EXCEPTION: SOME FIRE RETARDANT TREATED WOOD PRODUCTS ARE CORROSION RESISTANT THEREFORE, SLEEVES ARE NOT NEEDED. PLEASE SUBMIT A LETTER FROM MANUFACTURER OF THE FIRE TREATED WOOD PRODUCT STATING CORROSION FASTENERS ARE NOT REQUIRED FOR EOR TO REVIEW AND APPROVE.

TYP. BRIDGE INSTALLATION
DETAIL 1
SCALE: NONE
EB-2,3,4 | EB-4

ALLOWABLE ROD OFFSET
DETAIL 2
SCALE: NONE
EB-2,3,4 | EB-4

NOTE: SOLID BLOCKING, PROVIDE ENOUGH SOLID BLOCKING IN JOIST SPACE TO MATCH WIDTH OF ALL COMPRESSION STUDS OR POSTS OF THE WALL BELOW.

AT EQUAL NUMBER OF COMPRESSION STUDS FROM LEVEL BELOW & ABOVE

AT GREATER NUMBER OF COMPRESSION STUDS FROM LEVEL BELOW

TYP. SLACKJACK™ INSTALLATION
DETAIL 3
SCALE: NONE
EB-2,3,4 | EB-4

EARTHBOUND WELDED ANCHOR SPECIFICATIONS WELD ANCHOR MATERIAL: ASTM A108, 1018 STEEL, FU = 63.8 ksi min.							
PART	ROD	THREADED ROD		WELD ANCHOR PROPERTIES			
NO	DIA	GRADE	IBC 2018 ASD CAPACITY	DIA "D"	HEIGHT "H"	MIN. FILLET	WELD LENGTH
WA4	1/2	ASTM A36/A307	4,470 LBS	1 1/4	1/2	3/16 IN	3.73 IN
WA5	5/8	ASTM A36/A307	7,120 LBS	1 3/8	5/8	3/16 IN	4.91 IN
WA6	3/4	ASTM A36/A307	10,540 LBS	1 3/8	3/4	1/4 IN	5.11 IN
WA7	7/8	ASTM A36/A307	14,540 LBS	2	7/8	1/4 IN	7.07 IN
WA8	1	ASTM A36/A307	19,080 LBS	2	7/8	1/4 IN	7.07 IN
WA9	1 1/8	ASTM A36/A307	24,040 LBS	2	1	1/4 IN	7.07 IN
WA10	1 1/4	ASTM A36/A307	30,530 LBS	2 1/4	1 1/8	5/16 IN	8.05 IN
WA12	1 1/2	ASTM A36/A307	44,270 LBS	2 5/8	1 3/8	3/8 IN	9.42 IN
WA6HS	3/4	ASTM A449/A193B7	21,070 / 21,950 LBS	2	1 1/4	3/16 IN	6.87 IN
WA7HS	7/8	ASTM A449/A193B7	29,090 / 30,300 LBS	2 1/4	1 1/2	1/4 IN	7.85 IN
WA8HS	1	ASTM A449/A193B7	38,160 / 39,750 LBS	2 1/4	1 3/4	1/4 IN	7.85 IN
WA9HS	1 1/8	ASTM A449/A193B7	42,080 / 50,090 LBS	2 1/2	2	5/16 IN	8.84 IN
WA10HS	1 1/4	ASTM A449/A193B7	53,420 / 63,600 LBS	3	2 1/8	5/16 IN	10.41 IN
WA12HS	1 1/2	ASTM A449/A193B7	77,460 / 92,200 LBS	3 5/8	2 5/8	3/8 IN	12.57 IN

NOTES:
1. THREADED ROD CAPACITY CALCULATED PER IBC SECTION 1613 AND ASCE 7-16.
2. COUPLER STRENGTH IS BASED ON MINIMUM MECHANCIAL PROPERTIES VALUE OF COUPLER ITSELF (higher of [100% Fu * At] or [125% Fy * At]) TO ALWAYS EXCEED THE CONNECTED ROD STRENGTH BY 125%.
3. ENGINEER OF RECORD SHALL VERIFY WELD REQUIREMENTS SHOWN ON SHOP DRAWINGS. FLANGE STIFFENERS MAY BE REQUIRED.
4. WELD REQUIREMENTS SHALL MEET OR EXCEED CONNECTED THREADED ROD CAPACITY.
5. MINIMUM FILLET SIZE CALLOUT IS BASED ON E70xx (70 ksi) ELECTRODES.
6. WELD LENGTH IS CIRCUMFERENCE BASED ON WELDED ANCHOR DIAMETER + FILLET
7. COUPLER SHALL BE ORIENTED WITH SITE HOLE CLOSEST TO THE STEEL BEAM CONNECTION.
8. HIGH STRENGTH WELDED ANCHORS (WAxHS) WILL HAVE NOTCHED GROOVE.

ANCHOR BOLT NOTES:
1. CONTRACTOR SHALL BE RESPONSIBLE FOR COORDINATION OF WALL TYPE AND FRAMING LAYOUT BEFORE LOCATING ANCHOR BOLTS IN CONCRETE.
2. ALL DIMENSIONS ARE TYPICAL U.N.O.

TYP. ANCHOR BOLT PLAN
DETAIL B
SCALE: NONE
EB-2,3 | EB-4

GENERAL NOTES:
1. THIS IS FOR LOCATION SCHEMATIC PURPOSES AND IS NOT TO SCALE.
2. ROD SLEEVES ONLY REQUIRED FOR FIRE TREATED LUMBER AND BLOCKS TO PREVENT THREADED ROD CONTACT WITH TREATED WOOD.
3. TWO STORY RUN SHOWN. SHORTER OR TALLER RUNS ARE SIMILAR.

TYP. LOCATIONS OF ROD SLEEVES
DETAIL A
SCALE: NONE
EB-2,3,4 | EB-4

DETAIL
6x WALL ONLY 6
SCALE: NONE
EB-2 | EB-4

2700 INTERNATIONAL_4.DWG
December 2, 2022 at 11:38 AM

PATENTS AND PATENTS PENDING. For more information about the Earthbound Holdown System, visit http://www.holdown.com Copyright © 2022, Earthbound Corporation, All Rights Reserved.

REVISIONS
NO.	DATE	DESCRIPTION

DRAWN: MS
DESIGNED: KT
CHECKED: KT
APPROVED: WMN

PROJECT: 2700 INTERNATIONAL
2700 INTERNATIONAL BLVD, OAKLAND, CA 94601

EARTHBOUND 'Holdowns That Work'
EARTHBOUND CORPORATION
17361 Tye Street SE
Monroe, WA 98272
http://www.holdown.com
(800) 944-5669
Fax (360) 863-0722

CONTACT: EARTHBOUND 800-944-5669

EB CORP JOB NO: 23063

SHEET TITLE: EARTHBOUND SEISMIC HOLDOWN SYSTEM INSTALLATION DRAWINGS IAPMO ER-0429

DATE: 12/02/2022

SHEET NO. EB-4

PYATOK
1611 TELEGRAPH AVE.
SUITE 200
OAKLAND, CA 94612
T. 510.465.7010 | F. 510.465.8575
www.pyatok.com

element structural engineers, inc.
39675 Cedar Blvd., Suite 295C
Newark, California 94560
Tel: 510.573.1557
eFax: 973.924.0663
www.elementse.com

Owner

2700 INTERNATIONAL
OAKLAND, CA 94601

STAMP:

SIGNED DATE: 12/09/2022

ISSUE SCHEDULE

NO.	ISSUE	DATE
	100% SD	5/11/2022
	50% DD	7/15/2022
	100% DD	9/16/2022
	50% CD	11/18/2022
	PERMIT SET	12/09/2022

REVISION SCHEDULE
NO. ISSUE DATE

JOB NUMBER: ESE# 3395
DRAWN BY: YL/BDT
CHECKED BY: JTE
ISSUE DATE: 12/09/2022
SCALE:
TITLE: **EARTHBOUND DETAILS**

SHEET: **S5.14**

PRELIMINARY - Not for Construction -

© 2019 PYATOK ARCHITECTURE & URBAN DESIGN

12/7/2022 5:06:30 PM

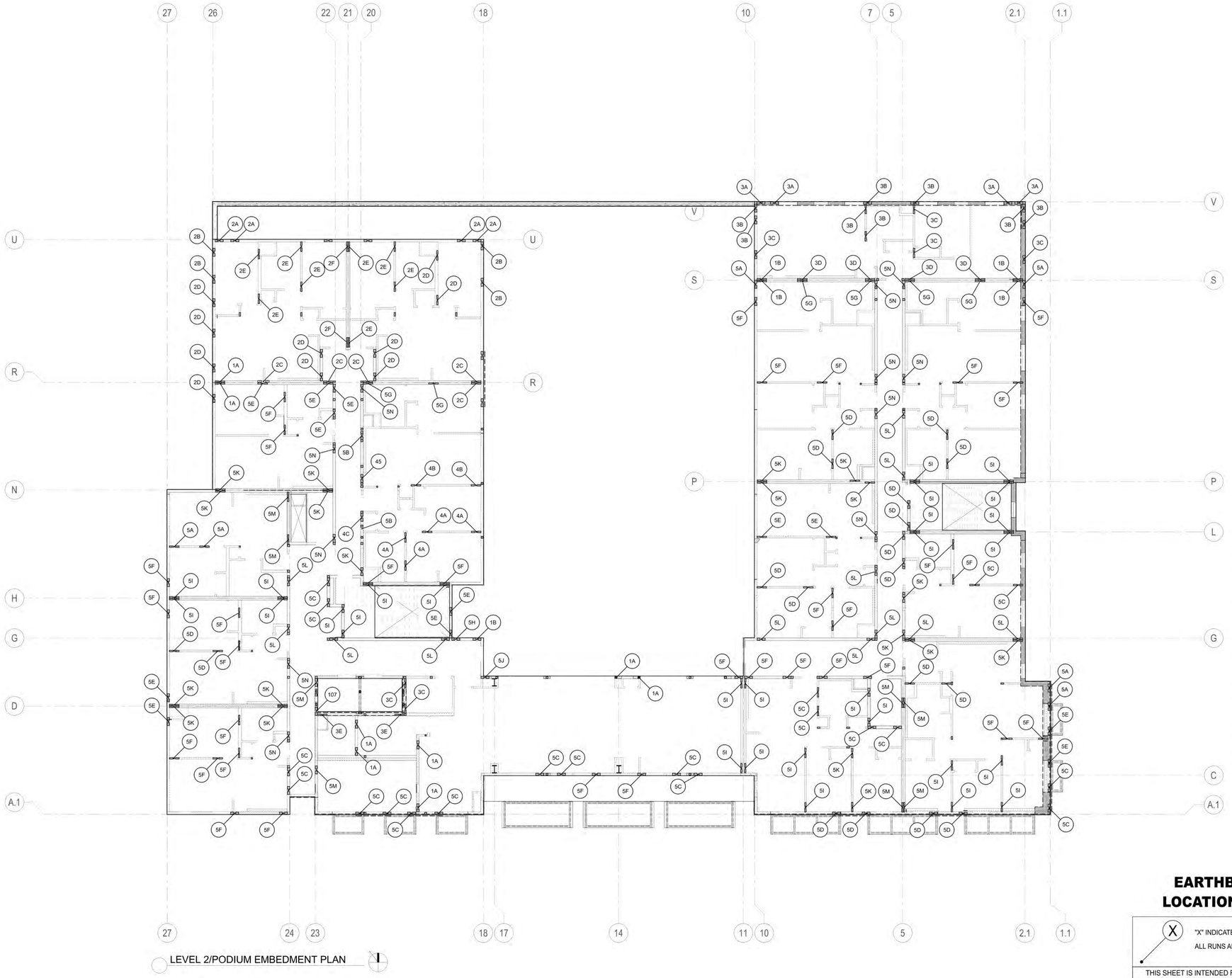

LEVEL 2/PODIUM EMBEDMENT PLAN

EARTHBOUND SYSTEM LAYOUT DISCLAIMER

1. THIS LAYOUT SHEET IDENTIFIES EARTHBOUND SYSTEM RUNS FOR CONVENIENCE TO THE SYSTEM INSTALLER AND PROVIDED FOR REFERENCE ONLY. REFER TO THE CONSTRUCTION PLANS FOR ALL OTHER INFORMATION.
2. EARTHBOUND CORPORATION HAS NOT CONFIRMED AND IS NOT RESPONSIBLE FOR THE DESIGN, ENGINEERING, CALCULATIONS OR DERIVATION OF STRUCTURAL FORCES RELATED TO THE BUILDING. ANY DESIGN OR DEMAND LOAD INFORMATION USED OR SHOWN ON THESE DRAWINGS HAS BEEN TAKEN FROM THE CONSTRUCTION DOCUMENTS AND HAS NOT BEEN CONFIRMED BY EARTHBOUND.
3. THIS LAYOUT IS NOT FOR CONSTRUCTION WITHOUT SUBSTANTIATION OF REVIEW BY THE RESPONSIBLE ENGINEER OF RECORD AND THE GOVERNING BUILDING JURISDICTION.
4. THIS LAYOUT IS SPECIFIC TO THE EARTHBOUND SYSTEM AND IS NOT APPLICABLE TO OTHER TIEDOWN SYSTEMS.
5. REFER TO SHEETS EB-1, EB-2, EB-3, EB-4 FOR ADDITIONAL NOTES AND INFORMATION.

EARTHBOUND SYSTEM LOCATION LAYOUT SHEET

X "X" INDICATES EARTHBOUND SYSTEM HOLDOWN RUNS. ALL RUNS ALIGN WITH WALLS ABOVE.

THIS SHEET IS INTENDED FOR THE LOCATION OF THE EARTHBOUND HOLDOWNS ONLY REFER TO THE CONSTRUCTION PLANS FOR ALL . OTHER INFORMATION.

NO.	DATE	REVISIONS DESCRIPTION

DRAWN: MS
DESIGNED: KT
CHECKED: KT
APPROVED: WMN

PROJECT:
2700 INTERNATIONAL
2700 INTERNATIONAL BLVD., OAKLAND, CA 94601

EARTHBOUND
"Holdowns That Work"
EARTHBOUND CORPORATION
17361 Tye Street SE
Monroe, WA 98272
http://www.holdown.com
(800) 944-5669
Fax (360) 863-0722

EB CORP JOB NO:
23063

SHEET TITLE:
EARTHBOUND SEISMIC HOLDOWN SYSTEM INSTALLATION DRAWINGS IAPMO ER-0429

DATE:
12/02/2022

SHEET NO.
EB-5

PYATOK
1611 TELEGRAPH AVE.
SUITE 200
OAKLAND, CA 94612
T. 510.465.7010 | F. 510.465.8575
www.pyatok.com

element structural engineers, inc.
39675 Cedar Blvd., Suite 295C
Newark, California 94560
Tel: 510.573.1557
eFax: 973.924.0663
www.elementse.com

Owner

2700 INTERNATIONAL
OAKLAND, CA 94601

STAMP:

SIGNED DATE: 12/09/2022

ISSUE SCHEDULE

NO.	ISSUE	DATE
	100% SD	5/11/2022
	50% DD	7/15/2022
	100% DD	9/16/2022
	50% CD	11/18/2022
	PERMIT SET	12/09/2022

REVISION SCHEDULE

NO.	ISSUE	DATE

JOB NUMBER: ESE# 3395
DRAWN BY: YL/BDT
CHECKED BY: JTE
ISSUE DATE: 12/09/2022
SCALE:
TITLE:
EARTHBOUND DETAILS

SHEET:
S5.15

PRELIMINARY - Not for Construction -

© 2019 PYATOK ARCHITECTURE & URBAN DESIGN

12/7/2022 5:06:42 PM

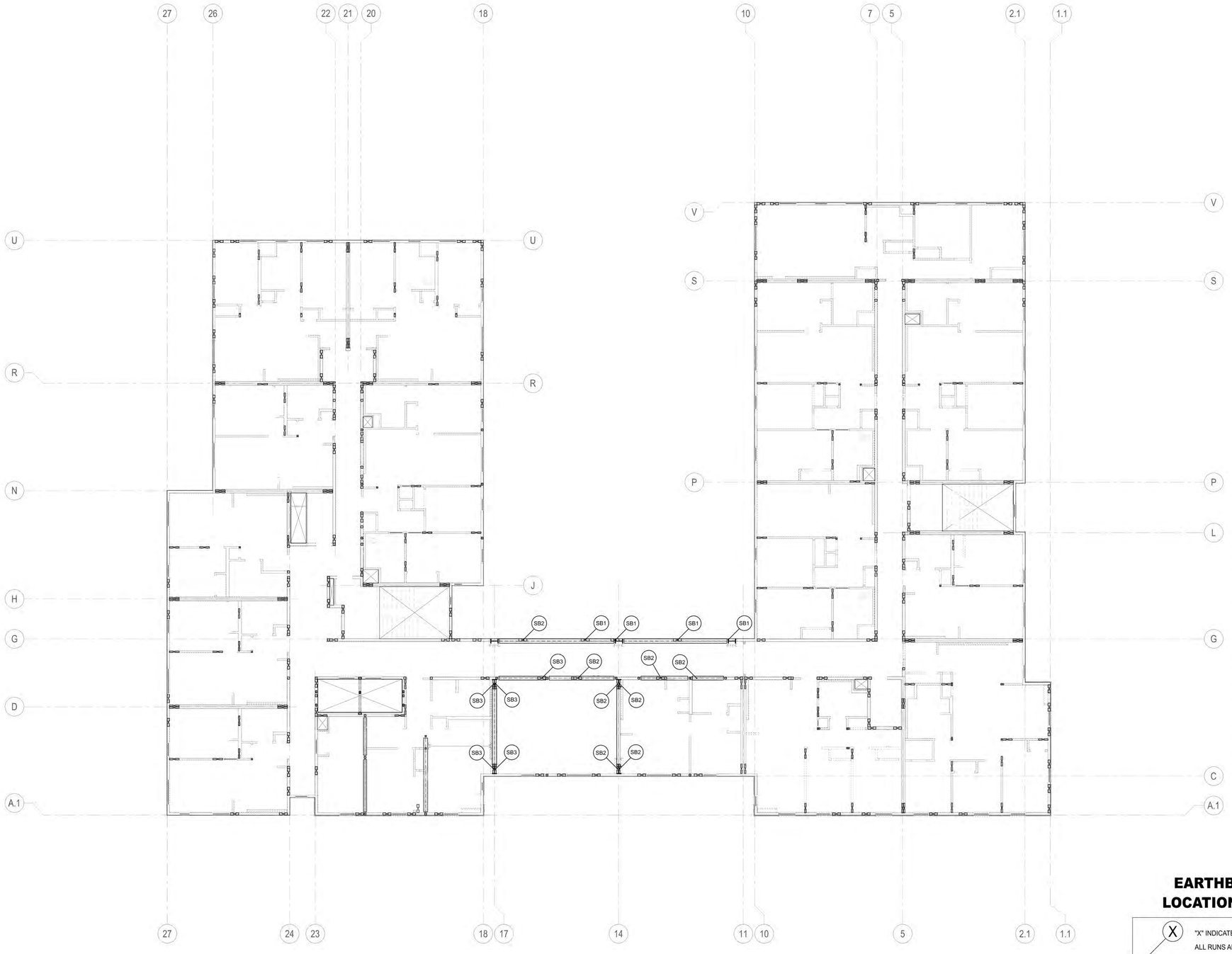

EARTHBOUND SYSTEM LAYOUT DISCLAIMER

1. THIS LAYOUT SHEET IDENTIFIES EARTHBOUND SYSTEM RUNS FOR CONVENIENCE TO THE SYSTEM INSTALLER AND PROVIDED FOR REFERENCE ONLY. REFER TO THE CONSTRUCTION PLANS FOR ALL OTHER INFORMATION.
2. EARTHBOUND CORPORATION HAS NOT CONFIRMED AND IS NOT RESPONSIBLE FOR THE DESIGN, ENGINEERING, CALCULATIONS OR DERIVATION OF STRUCTURAL FORCES RELATED TO THE BUILDING. ANY DESIGN OR DEMAND LOAD INFORMATION USED OR SHOWN ON THESE DRAWINGS HAS BEEN TAKEN FROM THE CONSTRUCTION DOCUMENTS AND HAS NOT BEEN CONFIRMED BY EARTHBOUND.
3. THIS LAYOUT IS NOT FOR CONSTRUCTION WITHOUT SUBSTANTIATION OF REVIEW BY THE RESPONSIBLE ENGINEER OF RECORD AND THE GOVERNING BUILDING JURISDICTION.
4. THIS LAYOUT IS SPECIFIC TO THE EARTHBOUND SYSTEM AND IS NOT APPLICABLE TO OTHER TIEDOWN SYSTEMS.
5. REFER TO SHEETS EB-1, EB-2, EB-3, EB-4 FOR ADDITIONAL NOTES AND INFORMATION.

EARTHBOUND SYSTEM LOCATION LAYOUT SHEET

X "X" INDICATES EARTHBOUND SYSTEM HOLDOWN RUNS. ALL RUNS ALIGN WITH WALLS ABOVE.

THIS SHEET IS INTENDED FOR THE LOCATION OF THE EARTHBOUND HOLDOWNS ONLY REFER TO THE CONSTRUCTION PLANS FOR ALL . OTHER INFORMATION.

NO.	DATE	REVISIONS DESCRIPTION

DRAWN: MS
DESIGNED: KT
CHECKED: KT
APPROVED: WMN

PROJECT:
2700 INTERNATIONAL
2700 INTERNATIONAL BLVD., OAKLAND, CA 94601

EARTHBOUND
"Holdowns That Work"

EARTHBOUND CORPORATION
17361 Tye Street SE
Monroe, WA 98272
http://www.holdown.com
(800) 944-5669
Fax (360) 863-0722

EB CORP JOB NO:
23063

SHEET TITLE:
EARTHBOUND SEISMIC HOLDOWN SYSTEM INSTALLATION DRAWINGS IAPMO ER-0429

DATE:
12/02/2022

SHEET NO.
EB-6

PYATOK
1611 TELEGRAPH AVE.
SUITE 200
OAKLAND, CA 94612
T. 510.465.7010 | F. 510.465.8575
www.pyatok.com

element structural engineers, inc.
39675 Cedar Blvd., Suite 295C
Newark, California 94560
Tel: 510.573.1557
eFax: 973.924.0663
www.elementse.com

Owner

2700 INTERNATIONAL
OAKLAND, CA 94601

STAMP:

SIGNED DATE: 12/09/2022

ISSUE SCHEDULE

NO.	ISSUE	DATE
	100% SD	5/11/2022
	50% DD	7/15/2022
	100% DD	9/16/2022
	50% CD	11/18/2022
	PERMIT SET	12/09/2022

REVISION SCHEDULE

NO.	ISSUE	DATE

JOB NUMBER:	ESE# 3395
DRAWN BY:	YL/BDT
CHECKED BY:	JTE
ISSUE DATE:	12/09/2022
SCALE:	
TITLE:	EARTHBOUND DETAILS

SHEET:
S5.16

PRELIMINARY - Not for Construction -

© 2019 PYATOK ARCHITECTURE & URBAN DESIGN

12/7/2022 5:06:55 PM

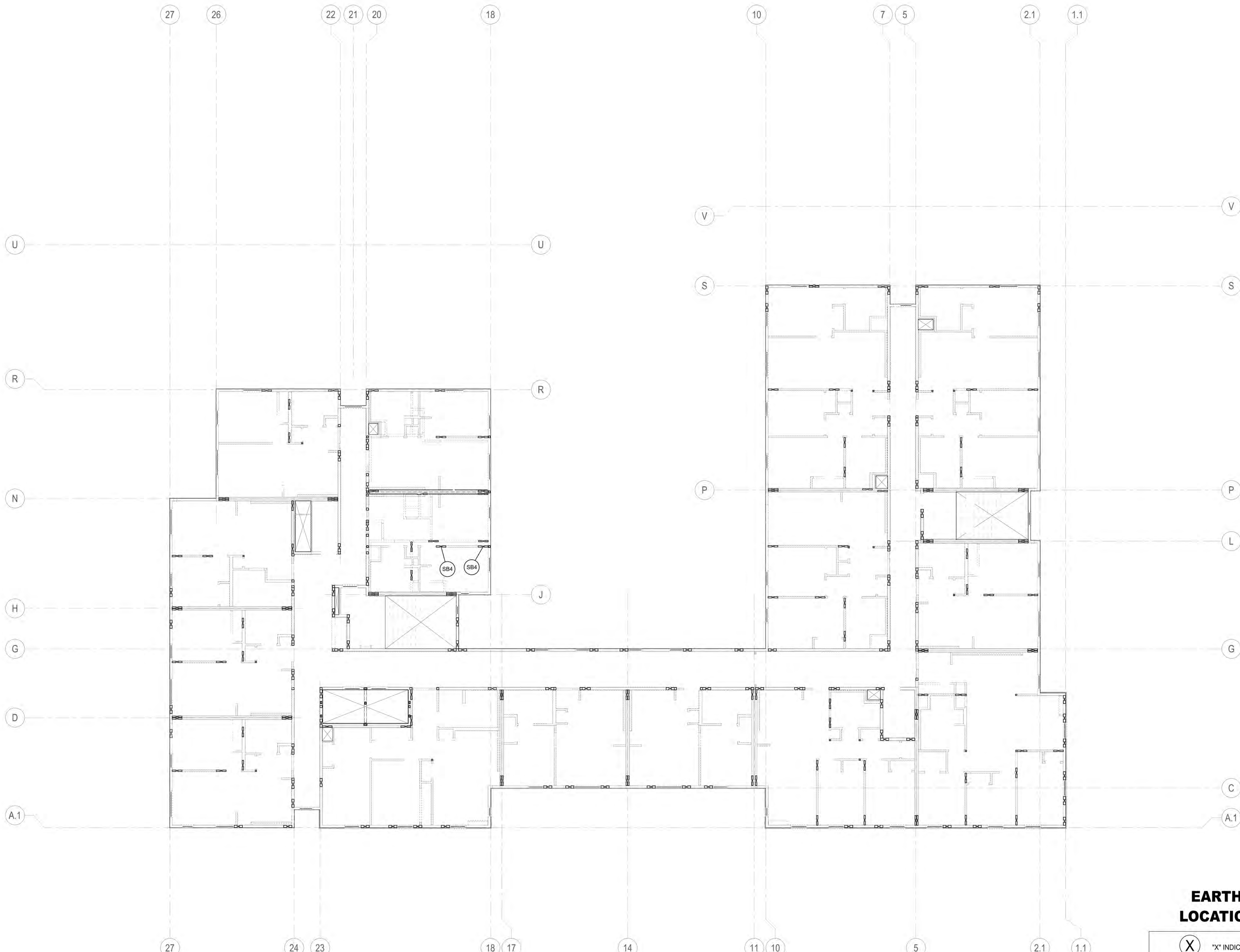

EARTHBOUND SYSTEM LAYOUT DISCLAIMER

1. THIS LAYOUT SHEET IDENTIFIES EARTHBOUND SYSTEM RUNS FOR CONVENIENCE TO THE SYSTEM INSTALLER AND PROVIDED FOR REFERENCE ONLY. REFER TO THE CONSTRUCTION PLANS FOR ALL OTHER INFORMATION.
2. EARTHBOUND CORPORATION HAS NOT CONFIRMED AND IS NOT RESPONSIBLE FOR THE DESIGN, ENGINEERING, CALCULATIONS OR DERIVATION OF STRUCTURAL FORCES RELATED TO THE BUILDING. ANY DESIGN OR DEMAND LOAD INFORMATION USED OR SHOWN ON THESE DRAWINGS HAS BEEN TAKEN FROM THE CONSTRUCTION DOCUMENTS AND HAS NOT BEEN CONFIRMED BY EARTHBOUND.
3. THIS LAYOUT IS NOT FOR CONSTRUCTION WITHOUT SUBSTANTIATION OF REVIEW BY THE RESPONSIBLE ENGINEER OF RECORD AND THE GOVERNING BUILDING JURISDICTION.
4. THIS LAYOUT IS SPECIFIC TO THE EARTHBOUND SYSTEM AND IS NOT APPLICABLE TO OTHER TIEDOWN SYSTEMS.
5. REFER TO SHEETS EB-1, EB-2, EB-3, EB-4 FOR ADDITIONAL NOTES AND INFORMATION.

EARTHBOUND SYSTEM LOCATION LAYOUT SHEET

(X) "X" INDICATES EARTHBOUND SYSTEM HOLDOWN RUNS.
ALL RUNS ALIGN WITH WALLS ABOVE.

THIS SHEET IS INTENDED FOR THE LOCATION OF THE EARTHBOUND HOLDOWNS ONLY REFER TO THE CONSTRUCTION PLANS FOR ALL . OTHER INFORMATION.

NO.	DATE	DESCRIPTION

REVISIONS

DRAWN: MS
DESIGNED: KT
CHECKED: KT
APPROVED: WMN

PROJECT: 2700 INTERNATIONAL
2700 INTERNATIONAL BLVD., OAKLAND, CA 94601

EARTHBOUND *"Holdowns That Work"*

EARTHBOUND CORPORATION
17361 Tye Street SE
Monroe, WA 98272
http://www.holdown.com
(800) 944-5669
Fax (360) 863-0722

EB CORP JOB NO: 23063

SHEET TITLE: EARTHBOUND SEISMIC HOLDOWN SYSTEM INSTALLATION DRAWINGS IAPMO ER-0429

DATE: 12/02/2022

SHEET NO. EB-7

PYATOK
1611 TELEGRAPH AVE.
SUITE 200
OAKLAND, CA 94612
T. 510.465.7010 | F. 510.465.8575
www.pyatok.com

element structural engineers, inc.
39675 Cedar Blvd., Suite 295C
Newark, California 94560
Tel: 510.573.1557
eFax: 973.924.0663
www.elementse.com

Owner

2700 INTERNATIONAL
OAKLAND, CA 94601

STAMP:

SIGNED DATE: 12/09/2022

ISSUE SCHEDULE

NO.	ISSUE	DATE
	100% SD	5/11/2022
	50% DD	7/15/2022
	100% DD	9/16/2022
	50% CD	11/18/2022
	PERMIT SET	12/09/2022

REVISION SCHEDULE

NO.	ISSUE	DATE

JOB NUMBER: ESE# 3395
DRAWN BY: YL/BDT
CHECKED BY: JTE
ISSUE DATE: 12/09/2022
SCALE:
TITLE: EARTHBOUND DETAILS

SHEET: S5.17

PRELIMINARY - Not for Construction -

© 2019 PYATOK ARCHITECTURE & URBAN DESIGN

12/7/2022 5:07:08 PM

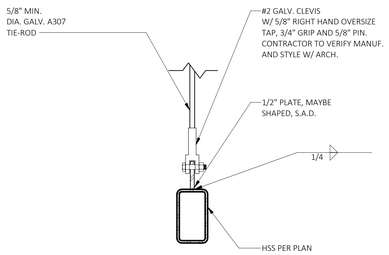

13 AWNING TIE-ROD CONNECTION

1 1/2" = 1'-0"

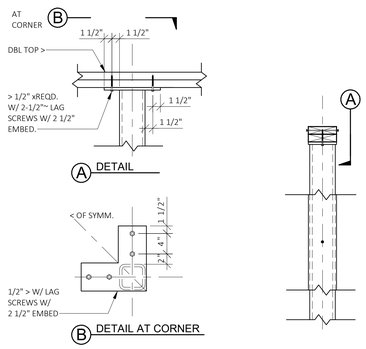

9 COLUMN AT DOUBLE TOP PLATE

07-201-22

1" = 1'-0"

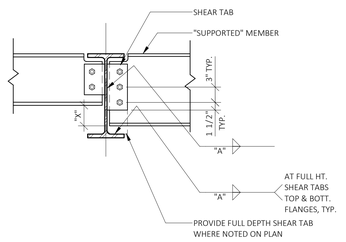

NOTES:
1. FOR ITEMS NOT SHOWN OR NOTED, SEE DET. 4/-.

2. CONSIDER THE CONNECTION ONE-SIDED WHERE BEAMS ARE OFFSET BY MORE THAN 12" OR 'X' EXCEEDS 4".

5 TYPICAL TWO SIDED SHEAR CONNECTION

07-302-13

1" = 1'-0"

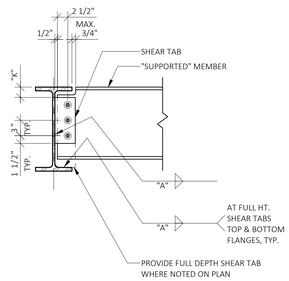

NOTES:
1. FOR NUMBER OF BOLTS, AND WELD AND SHEAR TAB SIZE, SEE DET. 4/-.

2. USE SIM. CONN AT SKEWED FRAMING CONDITION. SKEW SHEAR TAB TO MATCH SUPPORTED BEAM ALIGNMENT. TRIM FLANGE OF SUPPORTED MEMBER AT SKEW ANGLE.

1 TYPICAL ONE SIDED SHEAR CONNECTION

07-302-12

1" = 1'-0"

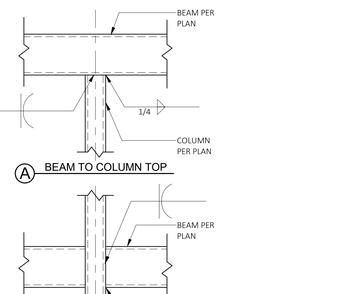

10 WOOD BEAM TO STEEL BEAM

07-203-06

1" = 1'-0"

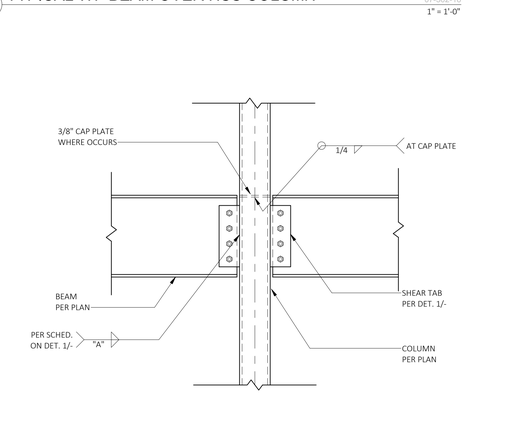

6 TYPICAL WF BEAM OVER HSS COLUMN

07-302-16

1" = 1'-0"

NOMINAL SIZE OF SUPPORTED MEMBER	NO. OF 7/8" DIA. A325N BOLTS (U.O.N.)	FILLET WELD SIZE "A"	SHEAR TAB THICKNESS (IN.)
W8, W10, C8, C10	2	5/16	3/8
W12, W14, C12	3	5/16	3/8
W16	4	5/16	3/8
W18	4	5/16	3/8
W21	5	5/16	3/8
W24	6	5/16	3/8
W27	7	5/16	3/8
W30	8	3/8	1/2
W33	9	3/8	1/2

NOTES:
1. PROVIDE COMPLETE PENETRATION WELD BTWN. SHEAR TAB AND SUPPORTING MEMBER WHERE REQUIRED ANGLE IS OUTSIDE OF AWS PRE-QUALIFIED FILLET WELD LIMITATIONS.
2. AT CONNECTIONS DESIGNATED ON PLAN AS PART OF THE SLRS, PROVIDE 2 ROWS OF SLIP CRITCAL SCHEDULED BOLTS, 1/2" FILLET WELD AND 1/2" GR-50 SHEAR TAB. SEE SHEETS S1.0 AND S7.3 FOR ADD'L REQUIREMETNS.

2 TYPICAL BOLTED CONNECTION SCHEDULE

N.T.S.

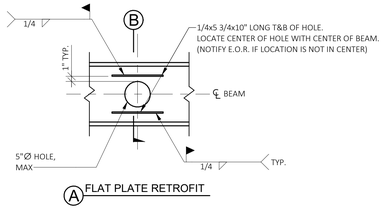

15 STEEL BEAM PENETRATION

07-301-03

1" = 1'-0"

07-301-09

11 TYPICAL HSS BEAM TO HSS COLUMN CONNECTION

1" = 1'-0"

7 TYPICAL WF BEAM TO PIPE COLUMN CONNECTION

07-302-07

1" = 1'-0"

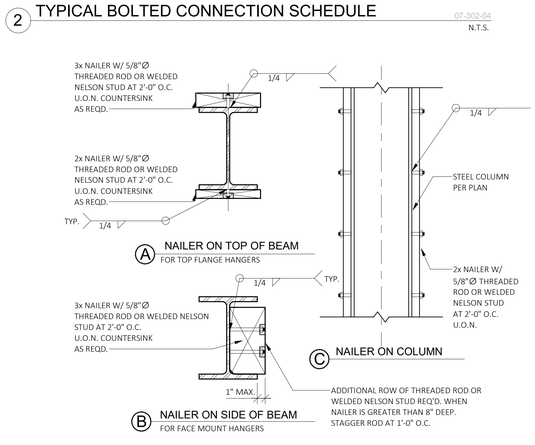

3 TYPICAL WOOD NAILERS AT STEEL MEMBERS

07-302-15

N.T.S.

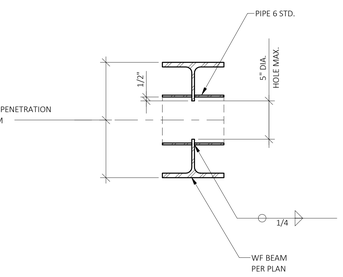

16 STEEL PENETRATION

1 1/2" = 1'-0"

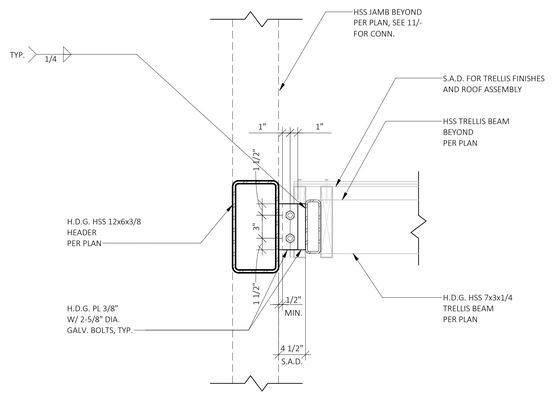

12 AWNING

1 1/2" = 1'-0"

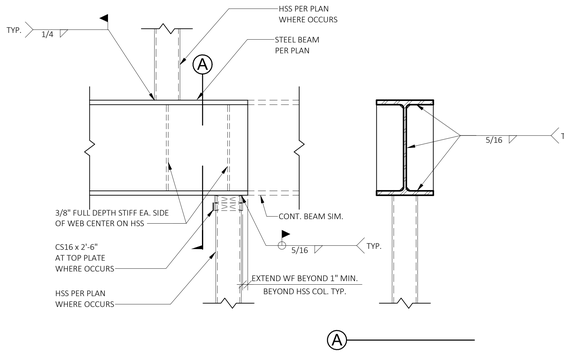

8 HSS POST TO STEEL BEAM

1" = 1'-0"

NOTE:
PROVIDE 3x NAILERS AS SHOWN W/ 5/8"Ø THREADED ROD OR WELDED NELSON STUDS AT 2'-0" O.C. LOCATE FIRST STUDS 1'-0" ABOVE F. FLR. ELEV.; NAILERS SHALL EXTEND FROM 6" ABOVE F. FLR TO 1'-0" BELOW TOP OF HSS-TYP. U.O.N. (COUNTERSINK OPTIONAL).

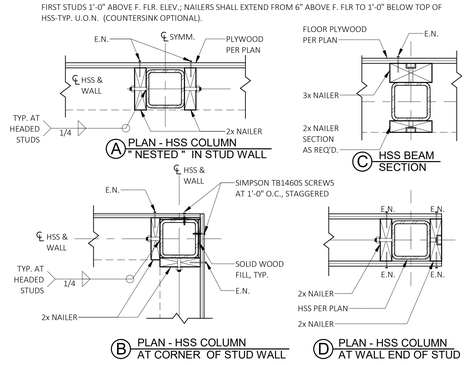

4 TYPICAL NAILER AND JAMB DETAIL AT HSS MEMBERS

07-201-21

N.T.S.

PYATOK
1611 TELEGRAPH AVE.
SUITE 200
OAKLAND, CA 94612
T. 510.465.7010 | F. 510.465.8575
www.pyatok.com

element
structural engineers, inc.
39675 Cedar Blvd., Suite 295C
Newark, California 94560
Tel: 510.573.1557
eFax: 973.924.0663
www.elementse.com

Owner

2700 INTERNATIONAL
OAKLAND, CA 94601

STAMP:
REGISTERED PROFESSIONAL ENGINEER
TROY N. FONTELERA
S 5536
STRUCTURAL
STATE OF CALIFORNIA
SIGNED DATE: 12/09/2022

ISSUE SCHEDULE

NO.	ISSUE	DATE
	100% SD	5/11/2022
	50% DD	7/15/2022
	100% DD	9/16/2022
	50% CD	11/18/2022
	PERMIT SET	12/09/2022

REVISION SCHEDULE

NO.	ISSUE	DATE

JOB NUMBER:	ESE# 3395
DRAWN BY:	YL/BDT
CHECKED BY:	JTE
ISSUE DATE:	12/09/2022
SCALE:	As indicated

TITLE:
STEEL DETAILS

SHEET:
S7.01

PRELIMINARY - Not for Construction -

© 2019 PYATOK ARCHITECTURE & URBAN DESIGN

12/7/2022 5:07:17 PM

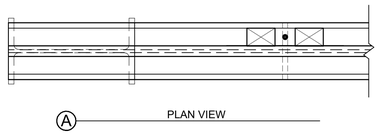

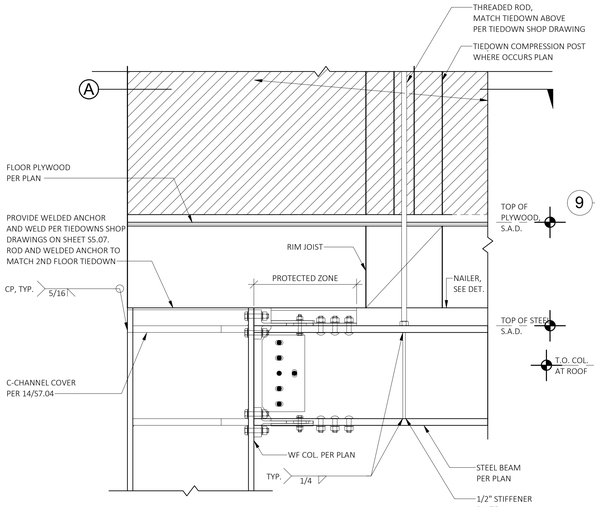

14 TIEDOWN ANCHORAGE TO STEEL BEAM

1" = 1'-0"

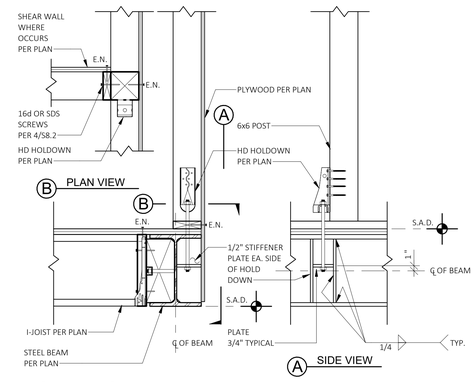

9 HOLD DOWN AT STEEL BEAM

07-204-01

1" = 1'-0"

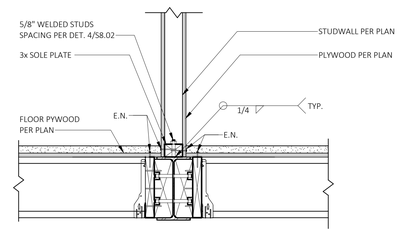

5 STEEL BEAM PERPENDICULAR TO FLOOR JOISTS AT SINGLE STUD SHEAR WALL

1" = 1'-0"

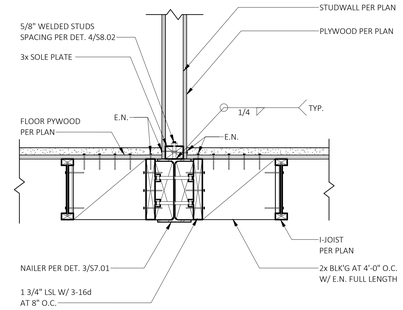

1 INTERIOR SHEAR WALL AT STEEL BEAM PARALLEL TO JOIST

1" = 1'-0"

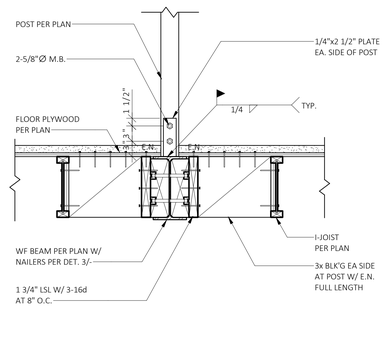

10 SEISMIC MOMENT CONNECTION

1" = 1'-0"

6 WOOD POST AT STEEL BEAM

1" = 1'-0"

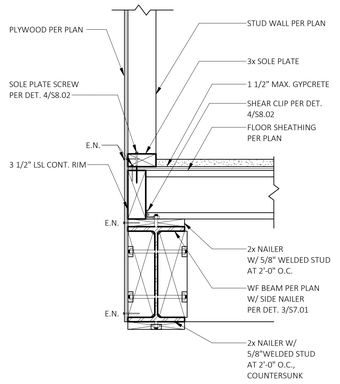

2 INTERIOR SHEAR WALL AT STEEL BEAM PERPENDICULAR TO JOIST

1" = 1'-0"

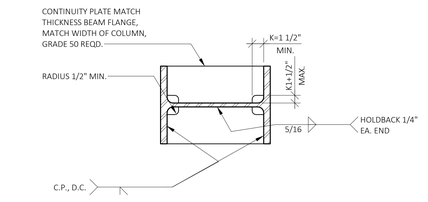

15 TYPICAL CONTINUITY PLATE

07-402-01

N.T.S.

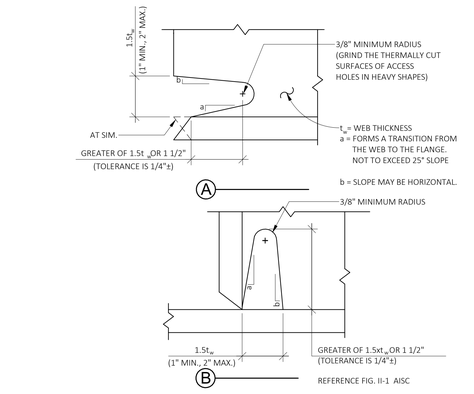

11 TYPICAL AISC WELD ACCESS HOLE

07-402-03

N.T.S.

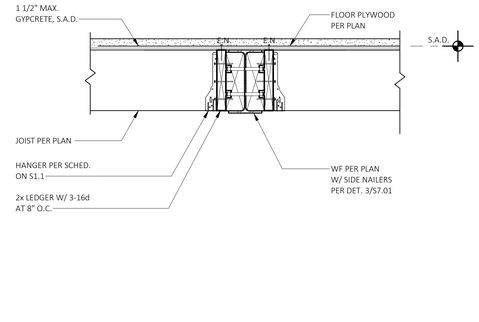

7 WOOD POST AT STEEL BEAM

1" = 1'-0"

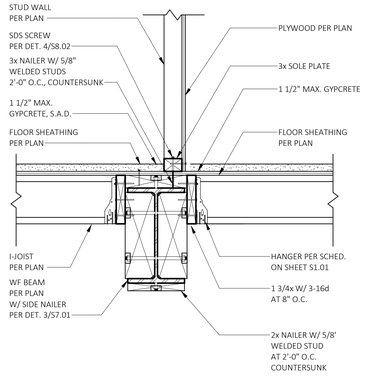

3 STEEL BEAM PERPENDICULAR TO JOIST

1" = 1'-0"

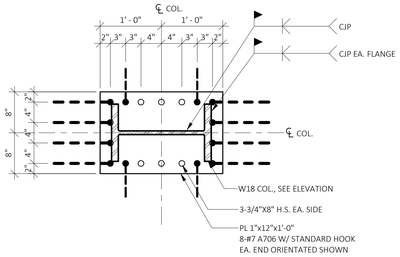

16 MOMENT FRAME BASE PLATE EMBED

1" = 1'-0"

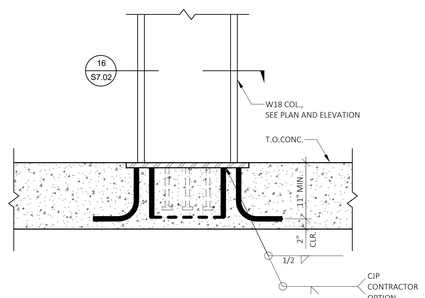

12 MOMENT FRAME BASE DETAIL

1" = 1'-0"

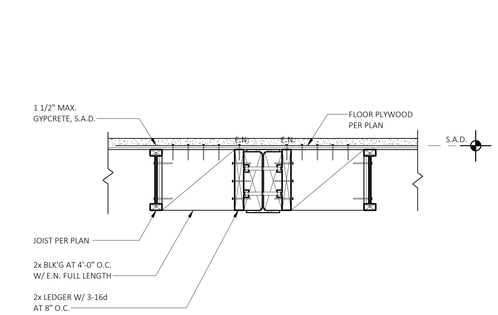

8 WOOD POST AT STEEL BEAM

1" = 1'-0"

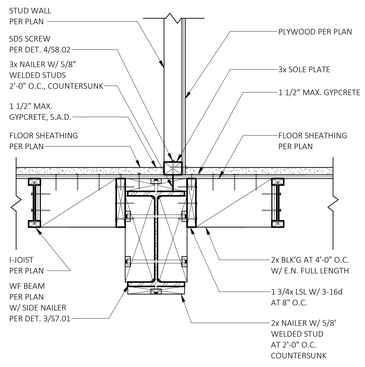

4 STEEL BEAM PARALLEL TO JOIST

1" = 1'-0"

PYATOK
1611 TELEGRAPH AVE.
SUITE 200
OAKLAND, CA 94612
T. 510.465.7010 | F. 510.465.8575
www.pyatok.com

element structural engineers, inc.
39675 Cedar Blvd., Suite 295C
Newark, California 94560
Tel: 510.573.1557
eFax: 973.924.0663
www.elementse.com

Owner

2700 INTERNATIONAL

OAKLAND, CA 94601

STAMP:

REGISTERED PROFESSIONAL ENGINEER TROY N. FONTELERA S 5536 STRUCTURAL STATE OF CALIFORNIA

SIGNED DATE: 12/09/2022

ISSUE SCHEDULE

NO.	ISSUE	DATE
	100% SD	5/11/2022
	50% DD	7/15/2022
	100% DD	9/16/2022
	50% CD	11/18/2022
	PERMIT SET	12/09/2022

REVISION SCHEDULE

NO.	ISSUE	DATE

JOB NUMBER:	ESE# 3395
DRAWN BY:	YL/BDT
CHECKED BY:	JTE
ISSUE DATE:	12/09/2022
SCALE:	1" = 1'-0"

TITLE:

STEEL DETAILS

SHEET:

S7.02

PRELIMINARY - Not for Construction -

© 2019 PYATOK ARCHITECTURE & URBAN DESIGN

12/7/2022 5:07:25 PM

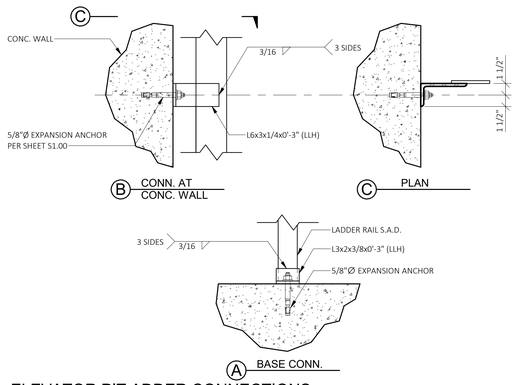

13 ELEVATOR PIT ADDER CONNECTIONS

07-306-08

1 1/2" = 1'-0"

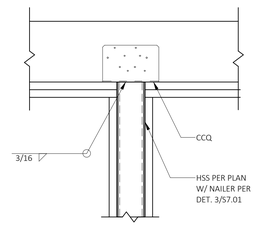

9 HSS GUIDERAIL POST TOP CONNECTION

1" = 1'-0"

NOTES:
1. MACHINE ENDS OF RAIL FOR 1/4" TONGUE AND GROVE SPLICE.
2. MACHINE BACK OF RAIL AND MATCHING SIDE OF SPLICE PLATE

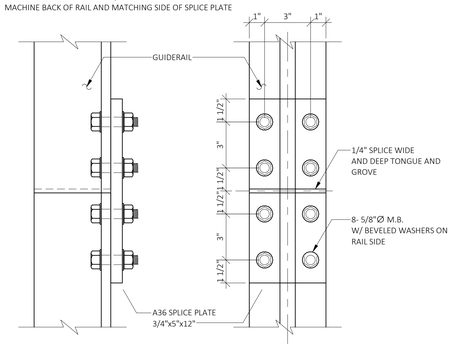

5 GUIDERAIL SPLICE DETAIL

07-306-03

3" = 1'-0"

NOTE:
1. FOR SPLICE DETAIL, SEE DET. 3/-.

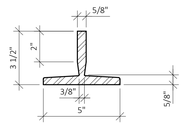

1 15 LB. GUIDERAIL

07-306-01

3" = 1'-0"

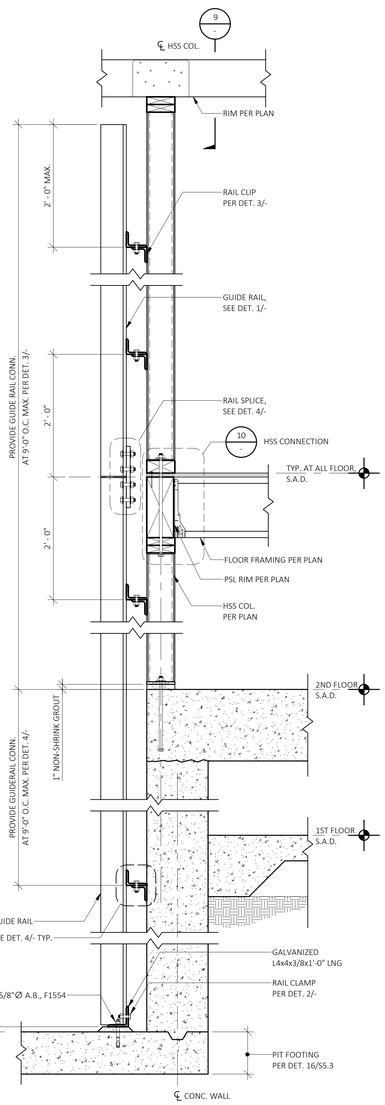

16 ELEVATOR RAIL SUPPORT

07-306-16

1" = 1'-0"

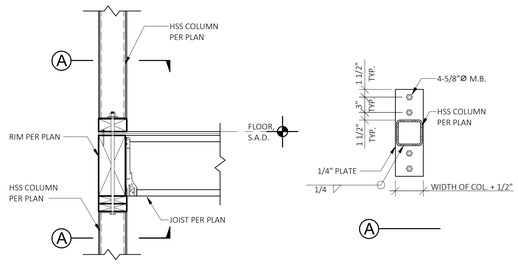

10 GUIDERAIL HSS FLOOR CONNECTION

07-306-11

1" = 1'-0"

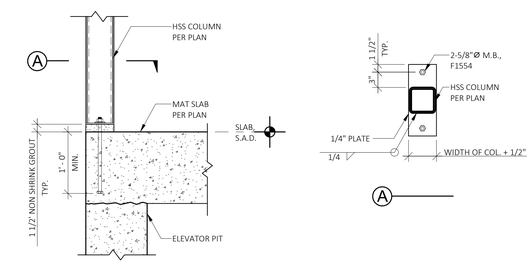

11 GUIDERAIL HSS FOUNDATION CONNECTION

07-306-12

1" = 1'-0"

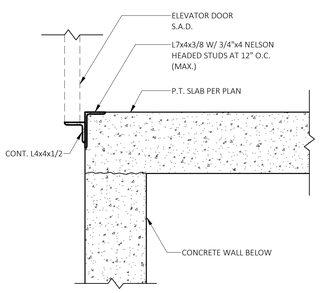

NOTE:
FOR INFO NOT NOTED, SEE DET. 4/- AND S/S5.04.

16 ELEVATOR RAIL SUPPORT

07-306-16

1" = 1'-0"

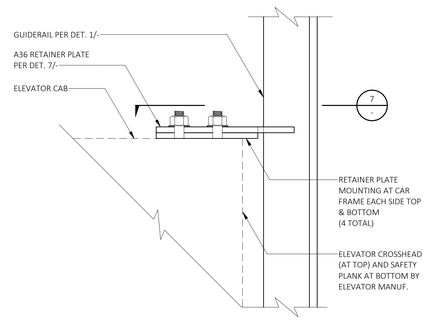

6 CAR FRAME AT RETAINER PLATE

07-306-06

3" = 1'-0"

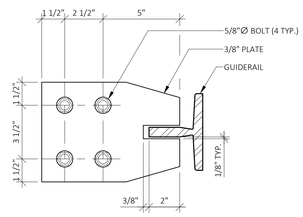

7 RETAINER PLATE DETAIL

07-306-07

3" = 1'-0"

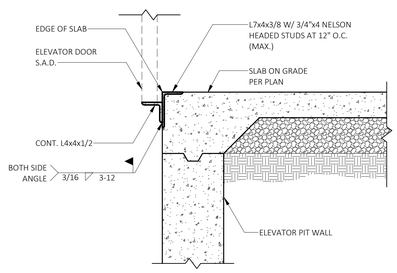

8 ELEVATOR DOOR SUPPORT AT PIT WALL

07-306-04

1" = 1'-0"

NOTES:
1. IF SLOTTED HOLES ARE NOT USED, DELETE WASHER ALSO.
2. RAIL CLAMLP SHALL BE TYP C-160-FORGED STEEL.
3. FOR SPLICE DETAIL, SEE DET. 3/-.

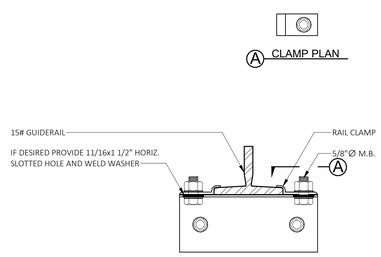

2 GUIDERAIL CLAMP

07-306-02

3" = 1'-0"

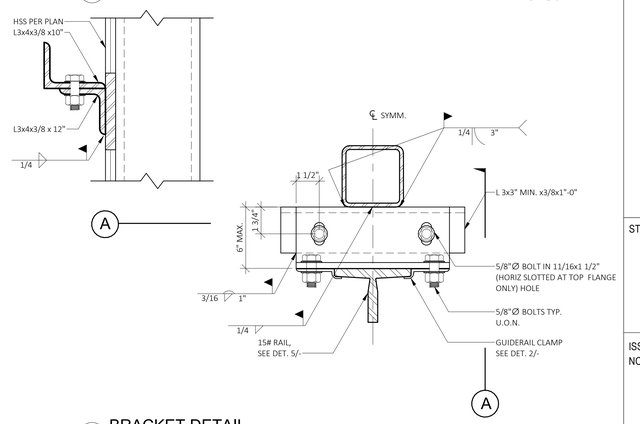

3 BRACKET DETAIL

07-306-05

3" = 1'-0"

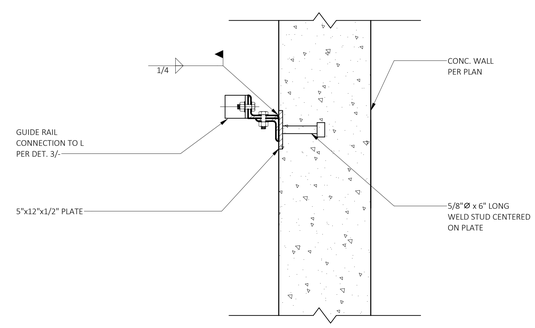

4 ELEVATOR RAIL SUPPORT

1 1/2" = 1'-0"

PYATOK
1611 TELEGRAPH AVE.
SUITE 200
OAKLAND, CA 94612
T. 510.465.7010 | F. 510.465.8575
www.pyatok.com

element
structural engineers, inc.
39675 Cedar Blvd., Suite 295C
Newark, California 94560
Tel: 510.573.1557
eFax: 973.924.0663
www.elementse.com

Owner

2700 INTERNATIONAL

OAKLAND, CA 94601

STAMP:

SIGNED DATE: 12/09/2022

ISSUE SCHEDULE

NO.	ISSUE	DATE
	100% SD	5/11/2022
	50% DD	7/15/2022
	100% DD	9/16/2022
	50% CD	11/18/2022
	PERMIT SET	12/09/2022

REVISION SCHEDULE

NO.	ISSUE	DATE

JOB NUMBER:	ESE# 3395
DRAWN BY:	YL/BDT
CHECKED BY:	JTE
ISSUE DATE:	12/09/2022
SCALE:	As indicated

TITLE:

STEEL DETAILS

SHEET:

S7.03

PRELIMINARY - Not for Construction -

© 2019 PYATOK ARCHITECTURE & URBAN DESIGN

12/7/2022 5:07:32 PM

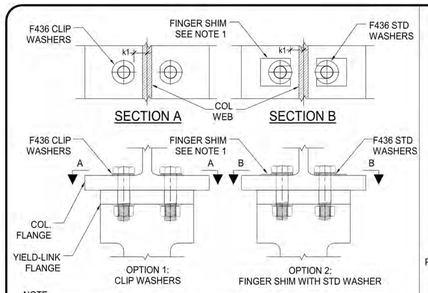

NOTE:
1. FINGER SHIM SHALL BE STRUCTURAL GRADE STEEL MATERIAL. TRIM TO FIT AS REQUIRED.
2. K1 VALUE FOR STEEL SHAPE VARIES. BOLT WASHER/SHIM SHALL BEAR FLAT ON COLUMN FLANGE.
3. SEE RCSC SPECIFICATION ON USE OF WASHERS ON SLOPING SURFACES

BOLT BEARING NEAR COLUMN WEB | 17

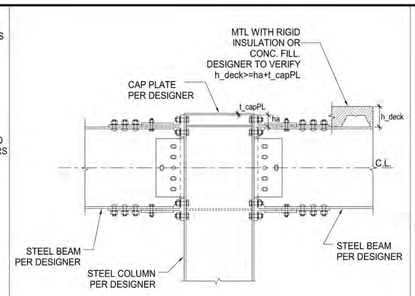

NOTE:
1. SEE 5/- OR 9/- FOR INFO NOT NOTED
2. SEE 8/- FOR ha VALUES FOR DIFFERENT LINK SIZES

ROOF CONN. W/BEAMS ON EA. SIDE | 13

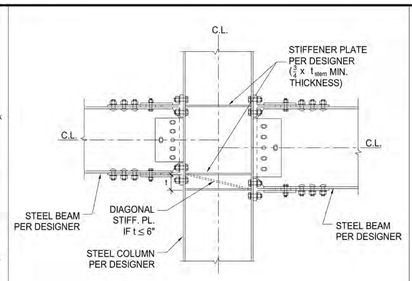

NOTE:
1. SEE 5/- FOR INFO NOT NOTED

MULTI-STORY COLUMNS (2 BEARS) | 9

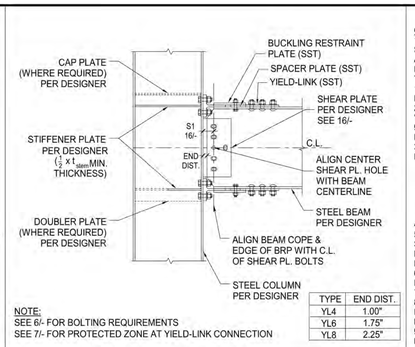

TYPE	END DIST.
YL4	1.00"
YL6	1.75"
YL8	2.25"

NOTE:
SEE 6/- FOR BOLTING REQUIREMENTS
SEE 7/- FOR PROTECTED ZONE AT YIELD-LINK CONNECTION

MULTI-STORY COLUMNS (1-BEAM) | 5

GENERAL NOTES:
1. SIMPSON STRONG-TIE® STRONG FRAME® AND THE YIELD-LINK® MOMENT CONNECTION STRUCTURAL FUSE ARE PROTECTED UNDER ONE OR MORE OF THE FOLLOWING US PATENTS AND APPLICATIONS: US PATENT NO. 8,001,734 B2, U.S. PATENT NO. 8,375,652 B2, AND U.S. PATENT PUBLICATION NO. 2015/0159362, AND MUST BE SUPPLIED OR LICENSED THROUGH SIMPSON STRONG-TIE. YIELD-LINK MOMENT CONNECTION IS MANUFACTURED AND PROTECTED UNDER US PATENT NO. 10,669,718 B2 AND CANNOT BE DUPLICATED OR FABRICATED WITHOUT EXPRESSED, WRITTEN PERMISSION FROM SIMPSON STRONG-TIE CO., INC.
2. YIELD-LINK STRUCTURAL FUSE CONNECTION IS MANUFACTURED AND TRADEMARKED BY "SIMPSON STRONG-TIE COMPANY INC." HOME OFFICE: 5956 W. LAS POSITAS BLVD., PLEASANTON, CA 94588 TEL: (800) 999-5099, FAX: (925) 847-1597. "SIMPSON STRONG-TIE COMPANY INC." IS AN ISO 9001 REGISTERED COMPANY.
3. DESIGN FOR YIELD-LINK SPECIAL MOMENT CONNECTION SHALL BE IN ACCORDANCE WITH THE FOLLOWING:
   - 2018 AND 2015 INTERNATIONAL BUILDING CODE
   - AISC SPECIFICATION FOR STRUCTURAL STEEL BUILDINGS (ANSI/AISC 360-10, 360-16)
   - AISC SEISMIC PROVISIONS (ANSI/AISC 341-10, 341-16)
   - PREQUALIFIED CONNECTIONS FOR SPECIAL AND INTERMEDIATE STEEL MOMENT FRAMES FOR SEISMIC APPLICATIONS (ANSI/AISC 358-16, 358-18)
   - ICC-ES ESR-2802
4. USE OF THIS PRODUCT IS SUBJECT TO THE APPROVAL OF THE LOCAL BUILDING DEPARTMENT.
5. THIS PRODUCT IS PART OF THE OVERALL LATERAL FORCE RESISTING SYSTEM OF THE STRUCTURE. DESIGN OF THE BUILDING'S LATERAL FORCE RESISTING SYSTEM, INCLUDING THE LOAD PATH TO TRANSFER LATERAL FORCES FROM THE STRUCTURE TO THE GROUND, IS THE RESPONSIBILITY OF THE STRUCTURAL ENGINEER OF RECORD (SER).
6. THE SER MUST SPECIFY THE REQUIRED COMPONENTS OF THE COMPLETE LOAD TRANSFER PATH INCLUDING DIAPHRAGMS, SHEAR TRANSFER, CHORDS AND COLLECTORS AND FOUNDATIONS.
7. ALL CONNECTED MEMBERS AND RELATED ELEMENTS SHALL BE DESIGNED BY THE SER.
8. INSTALLATION OF PRODUCT SHALL BE DONE IN CONFORMANCE WITH THESE DRAWINGS AND ICC-ES ESR-2802. THE PERFORMANCE OF MODIFIED PRODUCTS OR ALTERED INSTALLATION PROCEDURES ARE THE SOLE RESPONSIBILITY OF THE SER.
9. SIMPSON STRONG-TIE® COMPANY, INC. RESERVES THE RIGHT TO CHANGE SPECIFICATIONS, DESIGNS, AND MODELS WITHOUT NOTICE OR LIABILITY FOR SUCH CHANGES.
10. USE OF A SIMPSON STRONG-TIE PRODUCT DOES NOT IMPLY THAT SIMPSON STRONG-TIE ENDORSES ANY PROJECT, STRUCTURE OR USE. NO LICENSE IS GRANTED WITH RESPECT TO ANY SIMPSON STRONG-TIE TRADEMARK OR OTHER INTELLECTUAL PROPERTY RIGHTS. WRITTEN PERMISSION MUST BE OBTAINED PRIOR TO USING ANY SIMPSON STRONG-TIE TRADEMARKS OR PROPRIETARY DOCUMENTS AND MATERIALS.
11. SIMPSON STRONG-TIE IS NOT AFFILIATED WITH, AND DOES NOT SPONSOR OR ENDORSE, THE SER, FABRICATOR, INSTALLER OR USERS OF THIS DRAWING, NOR DOES SIMPSON STRONG-TIE HAVE ANY JOINT VENTURE, PARTNERSHIP, AGENCY, EMPLOYMENT OR FIDUCIARY RELATIONSHIP WITH SUCH PERSONS.

MATERIAL:
1. YIELD-LINKS: ASTM A992
2. BRP AND SPACER PLATES: ASTM A572 GR. 50
3. BEAMS AND COLUMNS MUST BE ROLLED W-FLANGE (A992) OR WELDED BUILT-UP I-SHAPE MEMBERS THAT MEETS AISC 360-16 SECTION A3.
4. FOR FLANGE CRUCIFORM COLUMN, SEE SHEET YL-INST2.
5. SHEAR PLATE, STIFFENER PLATE AND DOUBLER PLATE: ASTM A572 GR. 50 (U N.O.)
6. LINK STEM-TO-BEAM FLANGE BOLTS SHALL BE ASTM F3125 GRADE A490 OR F2280 (X OR N)
7. LINK FLANGE-TO-COLUMN FLANGE BOLTS SHALL BE ASTM F3125 GRADE A325-N (SNUG-TIGHT) OR F1852-N (PRETENSIONED)
8. SHEAR PLATE-TO-BEAM WEB BOLTS SHALL BE ASTM F3125 GRADE A325, A490, F1852 OR F2280 (X OR N TYPE PER DESIGN)
9. BRP-TO-BEAM FLANGE BOLTS SHALL BE ASTM F3125 GRADE A325-N (A325-X FOR YL8-6 & YL8-6-15)

YIELD-LINK CONNECTION WELDING REQUIREMENTS:
1. ALL SHOP AND FIELD WELDING ON COMPONENTS (SHEAR PLATE, STIFFENER PLATE, DOUBLER PLATE [IF REQUIRED]) OF THE YIELD LINK CONNECTION SHALL BE DONE BY PERSONNEL QUALIFIED PER AWS D1.1 SECTION 4 PART C.
2. SPECIFIC WRITTEN WELDING PROCEDURE SPECIFICATIONS (WPS) FOR EVERY WELDING APPLICATION USED FOR THE YIELD-LINK CONNECTIONS IN THE PROJECT SHALL BE SUBMITTED TO THE ENGINEER OF RECORD FOR REVIEW AND APPROVAL PRIOR TO START OF WORK. EACH WPS SHALL REFERENCE THE PREQUALIFIED WELDED JOINT DETAIL FROM SECTION 3 OF AWS D1.1.
3. IN LIEU OF ITEM 2, THE STEEL FABRICATOR MAY PROVIDE A PROCEDURE QUALIFICATION RECORD (PQR) FOR THE CONNECTION WELDS USED FOR THE PROJECT. THE PQR SHALL CONFORM TO THE REQUIREMENTS OF D1.1 SECTION 4.
4. WPS (OR PQR) SHALL CONTAIN ALL THE ESSENTIAL VARIABLES USED IN THE WELDING PROCEDURE AND SHALL BE STAMPED/APPROVED BY AN AMERICAN WELDING SOCIETY (OR APPROVED EQUIVALENT) CERTIFIED WELDING INSPECTOR.
5. UNLESS NOTED OTHERWISE BY THE ENGINEER OF RECORD, ALL WELD FILLER METAL SHALL HAVE CLASSIFICATION STRENGTH (F/EXX) OF 70 KSI.
6. FOR NON-DEMAND CRITICAL WELDS (BEAM TO COLUMN SHEAR PLATE AND COLUMN STIFFENER/CONTINUITY PLATE), WELD FILLER METAL SHALL MEET THE REQUIREMENT OF AWS D1.1 AND D1.8 (2016 EDITION) MINIMUM CHARPY V-NOTCH REQUIREMENT OF 20 FT*LBS AT 0°(F).
7. FOR DEMAND CRITICAL WELDS (YIELD-LINK STEM TO FLANGE [FOR WELDED VERSIONS], COLUMN SPLICES, DOUBLER PLATES AND BASE PLATES), WELD FILLER METAL SHALL MEET THE REQUIREMENTS OF AWS D1.1 AND D1.8 (2016 EDITION) MINIMUM CHARPY V-NOTCH REQUIREMENT OF 20 FT*LBS AT -20°(F) AND 40 FT*LBS AT 70°(F).
8. IN ADDITION TO THE MINIMUM CHARPY V-NOTCH REQUIREMENT, ALL FILLER METAL SHALL MEET THE DIFFUSIBLE HYDROGEN LEVEL AS NOTED IN SECTION 6.1.3 OF AWS D1.8 (2016 EDITION).

YIELD-LINK CONNECTION BOLTING REQUIREMENTS:
1. YIELD-LINK STEM TO BEAM FLANGE BOLTS SHALL BE INSTALLED AS PRETENSIONED. BOLTS CAN BE PRETENSIONED BY TWISTED-OFF-TYPE TENSION CONTROLLED BOLTS, WASHER INDICATING DEVICES, TURN-OF-NUT METHOD, OR CALIBRATED WRENCH METHOD. SEE SPECIFICATION FOR STRUCTURAL JOINTS USING HIGH-STRENGTH BOLTS (LATEST EDITION) FOR REQUIREMENTS OF THESE PRETENSIONING METHODS.
2. SEE DETAIL 6/- FOR LINK FLANGE-TO-COLUMN FLANGE BOLTING, BEAM WEB-TO-SHEAR PLATE BOLTING AND BUCKLING RESTRAINT PLATE-TO BEAM FLANGE BOLTING REQUIREMENTS.

INSTALLATION AND FIELD MODIFICATIONS:
THESE GENERAL INSTRUCTIONS FOR THE INSTALLER ARE PROVIDED TO ENSURE PROPER SELECTION AND INSTALLATION OF SIMPSON STRONG-TIE COMPANY INC, PRODUCTS AND MUST BE FOLLOWED CAREFULLY. THESE GENERAL INSTRUCTIONS ARE IN ADDITION TO THE SPECIFIC INSTALLATION INSTRUCTIONS AND NOTES PROVIDED FOR EACH PARTICULAR PRODUCT, ALL OF WHICH SHOULD BE CONSULTED PRIOR TO AND DURING INSTALLATION OF SIMPSON STRONG-TIE COMPANY INC. PRODUCTS.
1. PROPER PRODUCT INSTALLATION REQUIRES CAREFUL ATTENTION TO ALL NOTES AND INSTRUCTIONS. IN ADDITIONAL TO THE NOTES, WARNINGS, AND INSTRUCTIONS PROVIDED IN THE CATALOG, INSTALLERS, DESIGNERS, ENGINEERS AND CONSUMERS SHOULD CONSULT THE SIMPSON STRONG-TIE COMPANY INC. WEB SITE AT WWW.STRONGTIE.COM TO OBTAIN ADDITIONAL INFORMATION FOR INSTALLATION, SPECIFICATIONS, CODE REPORTS, TECHNICAL FLIERS AND BULLETINS, FAQS, AND OTHER PERTINENT INFORMATION.
2. FABRICATION AND ERECTION TOLERANCE SHALL BE IN ACCORDANCE WITH AISC 303-16 CODE OF STANDARD PRACTICE FOR STEEL BUILDINGS AND BRIDGES.
3. ALL SPECIFIED FASTENERS MUST BE INSTALLED ACCORDING TO THE INSTRUCTIONS PROVIDED IN THE CATALOG, CODE REPORT, AND INSTALLATION DETAILS. INCORRECT FASTENER QUANTITY, SIZE, PLACEMENT, TYPE, MATERIAL, OR FINISH MAY CAUSE THE CONNECTION TO FAIL.
4. YIELD-LINKS SHALL BE INSTALLED WITH MATCHING HEAT NO. AT EACH CONNECTION.
5. ALL FIELD MODIFICATIONS MUST BE APPROVED BY THE ENGINEER OF RECORD
6. YIELD-LINK SIZE SHALL BE INSTALLED PER MANUFACTURER OR ENGINEER OF RECORD'S FRAME ELEVATION DRAWINGS.
7. DO NOT CUT OR ENLARGE EXISTING HOLES IN THE YIELD-LINK, BRP OR SPACER PLATES.

INSPECTIONS:
1. INSPECTION REQUIREMENTS SHALL BE IN ACCORDANCE WITH THE LOCAL CODE, BASED ON BUILDING OCCUPANCY, REQUIREMENTS OF THE LOCAL BUILDING OFFICIAL, AND OTHER CONSIDERATIONS AND SHALL BE SPECIFIED BY THE STRUCTURAL ENGINEER OF RECORD.
2. THE FABRICATOR AND ERECTOR SHALL BE RESPONSIBLE FOR QUALITY CONTROL (Q/C) BY ENSURING WORKMANSHIP MEETS THE REQUIREMENTS OF THE CONTRACT DOCUMENTS. THE OWNER'S REPRESENTATIVE SHALL BE RESPONSIBLE FOR QUALITY ASSURANCE (Q/A) INSPECTIONS. Q/C AND Q/A REQUIREMENTS SHALL BE IN ACCORDANCE WITH AISC 341-16 CHAPTER J.
3. CONTACT SIMPSON STRONG-TIE® AT 800-999-5099 TO REQUEST YIELD-LINK HEAT NUMBER.
4. STEEL MOMENT FRAME CONNECTIONS UTILIZING THE SIMPSON STRONG-TIE YIELD-LINK CONNECTION SHALL HAVE AN IDENTIFICATION STICKER (PROVIDED BY SIMPSON) PLACED NEXT TO THE SHEAR PLATE BETWEEN THE LINKS FOR EACH CONNECTION.

GENERAL NOTES | 4

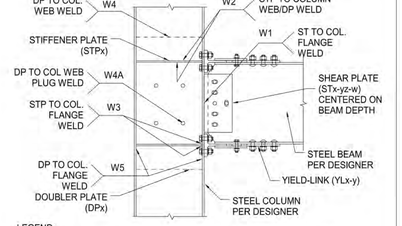

LEGEND:
DPx: x IS x/8-IN. THICK DOUBLER PLATES (i.e. DP4 IS 1/2" THICK DOUBLER PL.)
STPx: x IS x/8-IN. THICK STIFFENER/CONTINUITY PLATE
YLx-y: x IS x/8-IN THICK LINK STEM, y IS THE LINK YIELDING WIDTH
STx-yz-w: x IS x/8-IN THICK SHEAR PLATE, y IS y/8-IN DIM. BOLT-
z IS BOLT GR/THREAD COND.: A=A325N, B=A325X, C=A490N, D=A490X
w IS THE NUMBER OF HORIZONTAL BOLTS

NOTE: 1. W1 FILLET WELD SHALL BE MIN. 3/16" X ST THICKNESS ON EA. SIDE

YIELD-LINK CONNECTION LEGEND | 19

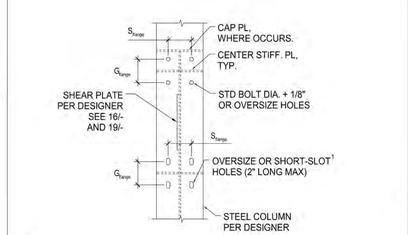

NOTE:
1. REFER TO RCSC FOR WASHER REQUIREMENTS ON SLOTTED HOLES
2. SEE DETAIL 17/- FOR WASHER OPTIONS WHEN WASHER ENCROACH INTO COLUMN K REGION.
3. SEE 8/- FOR Sflange AND Gflange DIMENSIONS

COLUMN FLANGE HOLES | 15

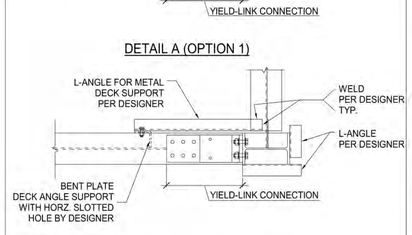

NOTE:
1. SEE STRUCTURAL DRAWINGS FOR OTHER SUPPORT OPTIONS BY DESIGNER

STEEL DECK SUPPORT AT CONN. | 11

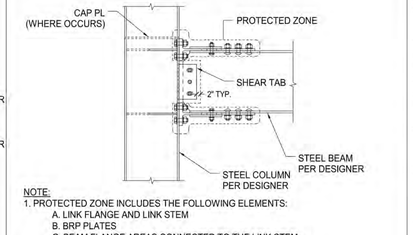

NOTE:
1. PROTECTED ZONE INCLUDES THE FOLLOWING ELEMENTS:
   A. LINK FLANGE AND LINK STEM
   B. BRP PLATES
   C. BEAM FLANGE AREAS CONNECTED TO THE LINK STEM
   D. COLUMN FLANGE AREAS CONNECTED TO THE LINK FLANGE
   E. SHEAR TAB AND BEAM WEB AT SHEAR TAB
   F. LINK STEM, LINK FLANGE, BRP AND SHEAR PLATE BOLTS
2. NO ATTACHMENT SHALL BE MADE WITHIN THE PROTECTED ZONE.

PROTECTED ZONE | 7

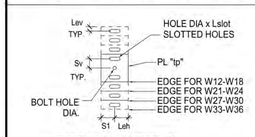

VERT. BOLT CONFIG.
(1 HORIZ. BOLT SHOWN)

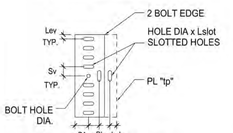

2&3 HORIZ. BOLT CONFIG.
(9 VERT. BOLTS SHOWN)

BEAM SIZE	HOLE DIA.	n VERT BOLTS	n HORZ BOLTS	Sv	Sh	Lev	Leh	Lslot	tp
W36	y+1/16	9	W	2 7/8	2 3/4	1 1/4	1 3/4	2 3/4	X
W33				2 7/8					
W30		7	W	2 3/8				2 7/8	
W27				2 3/8					
W24		5	W	2 3/8				1 7/8	
W21				2 3/8					
W18		3	W	3 1/2	2 3/4	1 1/8	1 3/8	1 1/2	X
W16				2 3/8					
W14				2 3/8					
W12				2 3/8					

1. NUMBER OF VERTICAL AND HORIZONTAL BOLTS SHOWN FOR REFERENCE ONLY. REFER TO STRUCTURAL DRAWINGS FOR PROJECT SPECIFIC REQUIREMENTS.
2. SHEAR TAB THICKNESS (x), BOLT SIZE (y) AND QUANTITY (w) PER DESIGNER, SEE 19/-.
3. S1=2.75" FOR YL4 LINKS; S1= 3.5" FOR YL6 LINKS; S1=4.0" FOR YL8 LINKS
4. BOLT HOLES IN THE BEAM FLANGES AND BEAM WEB SHALL BE STANDARD SIZE HOLES

TYPICAL SHEAR PLATE DETAIL | 16

NOTE:
1. FABRICATOR TO REQUEST YL-D DETAIL SHEETS FROM SIMPSON STRONG-TIE FOR DIMENSIONS NOT NOTED

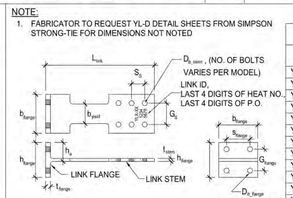

TYPE	t_flange	t_stem	h_flange	G_flange	h_i
YL4	0.875"	1/2"	5 3/4"	3 1/4"	3 1/8"
YL4-10	0.83"				
YL6/YL6-13	1.25"	3/4"	9 1/2"	5 3/4"	5"
YL8/YL8-15	1.81"	1"	10 3/4"	7"	5 7/8"

SIMPSON STRONG-TIE® STRONG FRAME® AND THE YIELD-LINK™ STRUCTURAL FUSE ARE PROTECTED UNDER ONE OR MORE OF THE FOLLOWING US PATENTS AND APPLICATIONS: US PATENT NO. 8,001,734 B2, US PATENT NO. 8,375,652 B2, AND US PATENT PUBLICATION NO. 2015/0159362, AND MUST BE SUPPLIED OR LICENSED THROUGH SIMPSON STRONG-TIE.

STANDARD YIELD-LINKS

LINK ID	L_link	b_yield	b_flange	s_flange	D_i,fg	D_i,stem	No.of Bolts[1]	BRP Model	SPACER Model
YL4-2	1'-6 7/8"	2"	6 1/4"	3 1/2"	7/8"	7/8"	4	BRP4C	SP4C
YL4-2.5		2 1/2"							
YL4-3		3"	6 1/2"						
YL4-2.25	1'-9 3/8"	2 1/4"	7"	4 1/2"			6	BRP4A	SP4
YL4-2.875		2 7/8"							
YL4-3.5		3 1/2"	8"	5 1/2"					
YL4-3.75		3 3/4"						BRP4B	
YL4-4		4"							
YL6-2.5	2'-3 1/2"	2 1/2"	6 1/2"	4"	7/8"	7/8"	6	BRP6D	SP6D
YL6-3		3"	8"	5"	1"	1"		BRP6A	SP6
YL6-3.5		3 1/2"							
YL6-4		4"							
YL6-4.5		4 1/2"	10"	6"	1 1/4"	1 1/4"		BRP6B	
YL6-5		5"							
YL6-5.5		5 1/2"	12"					BRP6C	
YL6-6		6"			1 3/8"				
YL8-4	2'-7 1/16"	4"	9"	5 1/4"	1 3/8"	1 1/4"	8	BRP8A	SP8
YL8-4.5		4 1/2"							
YL8-5		5"	12"	6"	1 1/2"			BRP8B	
YL8-5.5	2'-10 7/16"	5 1/2"							
YL8-6		6"							

EXTENDED YIELD-LINKS

LINK ID	L_link	b_yield	b_flange	s_flange	D_i,fg	D_i,stem	No.of Bolts[1]	BRP Model	SPACER Model
YL4-2.25-10	1'-9 3/8"	2 1/4"	7"	4 1/2"	7/8"	7/8"	4	BRP4A-10	SP4-10
YL4-2.875-10		2 7/8"							
YL4-3.5-10	2'-1 5/16"	3 1/2"	8"	5 1/2"			6	BRP4B-10	
YL4-3.75-10		3 3/4"							
YL4-4-10		4"							
YL6-3-13	2'-5 1/2"	3"	8"	5"	1"	1"	6	BRP6A-13	SP6-13
YL6-3.5-13		3 1/2"							
YL6-4-13		4"							
YL6-4.5-13		4 1/2"	10"	6"	1 1/4"	1 1/4"		BRP6B-13	
YL6-5-13		5"							
YL6-5.5-13		5 1/2"	12"					BRP6C-13	
YL6-6-13		6"			1 3/8"				
YL8-4-15	2'-9 1/16"	4"	9"	5 1/4"	1 3/8"	1 1/4"	8	BRP8A-15	SP8-15
YL8-4.5-15		4 1/2"							
YL8-5-15		5"	12"	6"	1 1/2"			BRP8B-15	
YL8-5.5-15	3'-1 7/16"	5 1/2"							
YL8-6-15		6"							

1. NUMBER OF YIELD-LINK STEM BOLTS SHOWN IN THIS COLUMN. NUMBER OF YIELD-LINK FLANGE BOLTS=4 FOR ALL LINKS.
2. CUSTOM DESIGN LINKS AVAILABLE, CONTACT SIMPSON STRONG-TIE FOR MORE INFORMATION.
3. BEAM, COLUMN AND HOLE DIMENSIONAL TOLERANCE SHALL BE PER AISC CODE OF STANDARD PRACTICE FOR STEEL BUILDINGS AND BRIDGES (AISC 303-16)

YIELD-LINK GEOMETRIES | 8

PYATOK
1611 TELEGRAPH AVE.
SUITE 200
OAKLAND, CA 94612
T. 510.465.7010 | F. 510.465.8575
www.pyatok.com

element structural engineers, inc.
39675 Cedar Blvd., Suite 295C
Newark, California 94560
Tel: 510.573.1557
eFax: 973.924.0663
www.elementse.com

Owner

NO.	DATE	REVISIONS
5	09/01/20	MISC. UPDATES

SIMPSON STRONG-TIE, CO. INC.
5956 W. Las Positas Blvd.
Pleasanton, CA 94588
Tel: (800) 999-5099
Fax: (925) 847-1597
Web site: www.strongtie.com

SIMPSON StrongTie® THERE IS NO EQUAL

YIELD-LINK® CONNECTION

SPECIAL STEEL MOMENT FRAME
CONNECTION DETAILING INFORMATION

NAME:
DATE:
SCALE: N.T.S.
SHEET:
YL-INST1
JOB NO.

2700 INTERNATIONAL

OAKLAND, CA 94601

STAMP:

SIGNED DATE: 12/09/2022

ISSUE SCHEDULE

NO.	ISSUE	DATE
	100% SD	5/11/2022
	50% DD	7/15/2022
	100% DD	9/16/2022
	50% CD	11/18/2022
	PERMIT SET	12/09/2022

REVISION SCHEDULE

NO.	ISSUE	DATE

JOB NUMBER: ESE# 3395
DRAWN BY: YL/BDT
CHECKED BY: JTE
ISSUE DATE: 12/09/2022
SCALE: N.T.S.
TITLE:
SIMPSON YIELD-LINK DETAILS

SHEET:
S7.04

PRELIMINARY - Not for Construction -

© 2019 PYATOK ARCHITECTURE & URBAN DESIGN

12/7/2022 5:07:46 PM

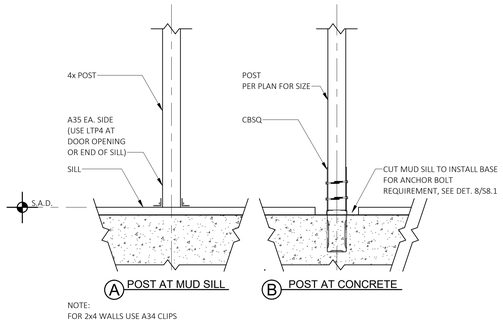

NOTE:
FOR 2x4 WALLS USE A34 CLIPS

13 POST BASE

1" = 1'-0"

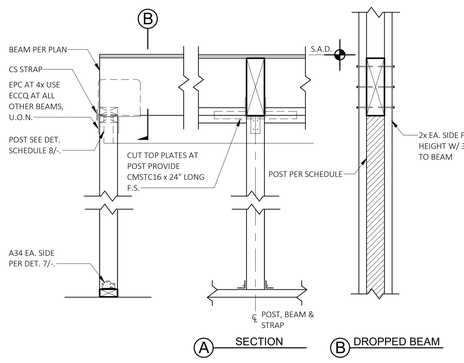

9 TYPICAL FLUSH BEAM DEEPER THAN JOIST TO POST CONNECTION AT WALL

1" = 1'-0"

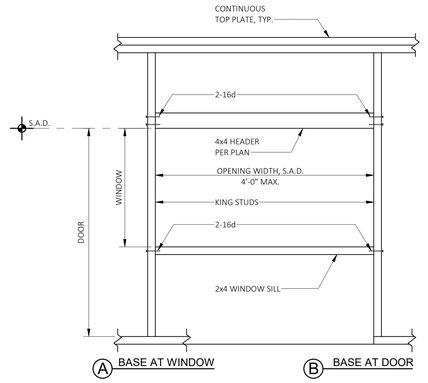

5 NON-STRUCTURAL INTERIOR WALL OPENING

08-101-09
N.T.S.

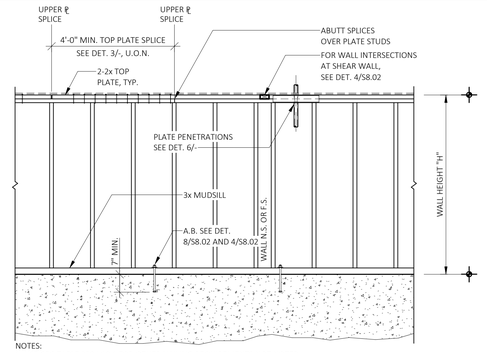

NOTES:
1. USE CBC TABLE 2304.10.1 FOR OTHER NAILING REQUIREMENTS NOT NOTED.
2. FOR TALLER WALLS, SEE DET. 2/-.
3. FOR WALL FRAMING SIZE AND SPACING, SEE SCHEDULE ON SHEET S1.01.

1 BEARING OR SHEAR WALL FRAMING

08-101-01
1/2" = 1'-0"

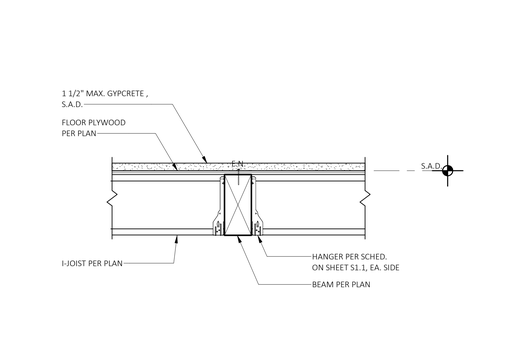

14 INTERIOR NON-STRUCTURAL WALL

08-301-12A
1" = 1'-0"

OPENING WIDTH "W"	EXTERIOR WALL (1), (2),(3)					INTERIOR WALL (1),(2),(3)					FRAMING CLIPS
	HDR SIZE	KING STUD	BEARING STUD LEVEL			HDR SIZE	KING STUD	BEARING STUD LEVEL			
			3RD	2ND	1ST			3RD	2ND	1ST	
4'-0"	6x8	2x6	2x6	2x6	2x6	4x8	2x4	2x4	2x4	2x6	NONE
5'-0"	6x10	2x6	2x6	2x6	2x6	4x10	2x4	2x4	2-2x4	2x6	NONE
6'-0"	6x10	2x6	2x6	2x6	2x6	4x10	2x4	2x4	2-2x4	2x6	A35
7'-0"	6x12	2-2x6	2-2x6	2-2x6	3-2x6	4x12	2x4	2x4	2-2x4	2-2x6	A35
8'-0"	6x12	2-2x6	2-2x6	2-2x6	3-2x6	4x12	2x4	2x4	2-2x4	2-2x6	A35
9'-0"	5 1/4x11 7/8 PSL	2-2x6	2-2x6	2-2x6	3-2x6	3 1/2x11 7/8 PSL	2-2x4	2-2x4	2-2x4	2-2x6	A35
10'-0"	5 1/4x11 7/8 PSL	3-2x6	2-2x6	2-2x6	3-2x6	3 1/2x11 7/8 PSL	2-2x4	2-2x4	2-2x4	2-2x6	A35

HEADER FRAMING SCHEDULE NOTES:
1. UNLESS OTHERWISE NOTED ON PLANS.
2. SEE NAILING SCHEDULE ON SHEET S1.01 FOR OTHER NAILING REQUIREMENTS NOT NOTED.
3. SEE DETAIL 4/- FOR STRUCTURAL WALL OPENINGS.
4. SEE DET. 6/- FOR NON-STRUCTURAL INTERIOR WALL OPENINGS.

10 WINDOW/DOOR FRAMING SCHEDULE

08-100-05
N.T.S.

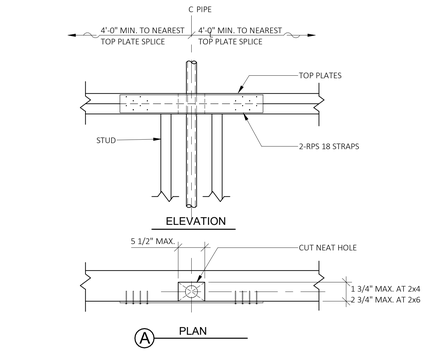

NOTE:
NOT ALL NAILS SHOWN FOR CLARITY.

6 STRENGTHENING PENETRATION THROUGH BEARING OR SHEAR WALL

08-102-02
12" = 1'-0"

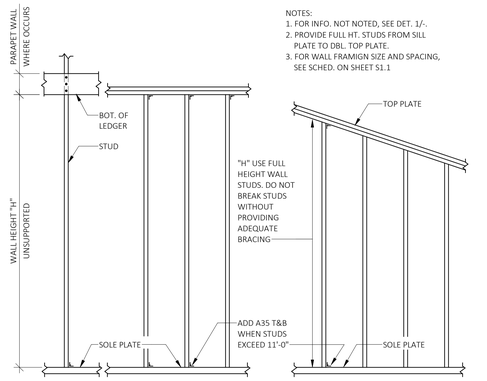

NOTES:
1. FOR INFO. NOT NOTED, SEE DET. 1/-.
2. PROVIDE FULL HT. STUDS FROM SILL PLATE TO DBL. TOP PLATE.
3. FOR WALL FRAMIGN SIZE AND SPACING, SEE SCHED. ON SHEET S1.1

2 BALLOON FRAMED WALLS

08-101-04
1/2" = 1'-0"

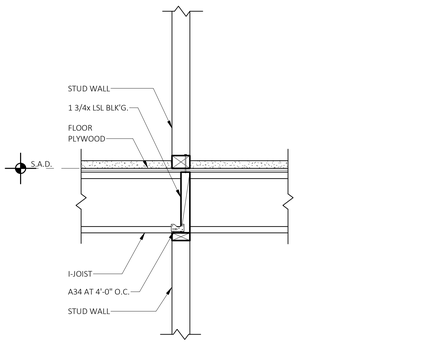

15 INTERIOR NON-SHEAR

1" = 1'-0"

BEAM SIZE	2x6 WALL LEVEL					BEAM SIZE	2x4 WALL LEVEL				
	6TH	5TH	4TH	3RD	2ND		6TH	5TH	4TH	3RD	2ND
6x8	6x6	6x6	6x6	6x6	6x6	4x8	4x4	4x4	4x4	4x8	4x12
6x10	6x6	6x6	6x6	6x6	6x6	4x10	4x4	4x6	4x8	4x8	4x12
6x12	6x6	6x6	6x6	6x6	6x8	4x12	4x4	4x6	4x8	3 1/2x7 PSL	3 1/2x7 PSL
3 1/2x11 7/8 PSL	6x6	6x6	6x6	6x6	6x8	3 1/2x11 7/8 PSL	4x4	4x6	4x8	3 1/2x7 PSL	3 1/2x9 1/2 PSL
5 1/4x11 7/8 PSL	6x6	6x6	6x6	6x6	6x8	5 1/4x11 7/8 PSL	4x6	4x6	4x8	3 1/2x7 PSL	3 1/2x9 1/2 PSL
7x11 7/8 PSL	6x6	6x6	6x6	6x6	6x8	7x11 7/8 PSL	4x8	4x8	4x8	3 1/2x9 1/2 PSL	3 1/2x11 7/8 PSL

NOTES:

1. POST CAPS SHALL MATCH SIZE OF CONNECTING BEAM AND SHALL BE SELECTED FROM THE MOST CURRENT SIMPSON (STRONG-TIE CONNECTOR) CATALOG BASED ON THE MAXIMUM MANUFACTURER RECOMMENDATION CAPACITIES, U.O.N.
2. FOR POST BASE CONNECTIONS, SEE DETAIL 7/-.
3. POSTS SPECIFIED ARE FOR SUPPORTING ONE END OF THE BEAM ONLY WHERE TWO BEAMS FRAME INTO THE SAME LOCATION. PROVIDE A POST UNDER EACH, U.O.N.
4. FOR FLUSH BEAM TO POST CONNECTION AT WALL, USE DETAIL 7/-.
5. FOR FLUSH BEAM DEEPER THAN JOIST AT WALL, USE POST CONNECTION DETAIL 9/-.
6. FOR DROP BEAM TO POST CONNECTION, USE DETAIL 9/-.

11 TYPICAL BEAM TO POST CONNECTION SCHEDULE - MULTI FLOORS

N.T.S.

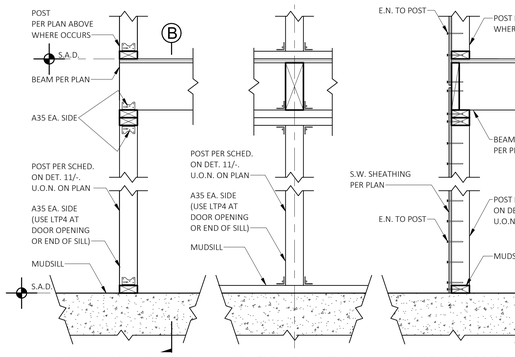

7 FLUSH BEAM TO POST CONNECTION AT WALL

08-102-03
1" = 1'-0"

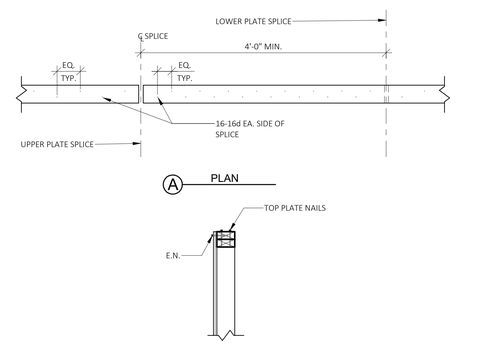

3 TOP PLATE SPLICE AT BEARING OR SHEAR WALLS

08-101-05
1" = 1'-0"

16 BEAM PERPENDICULAR TO JOIST

1" = 1'-0"

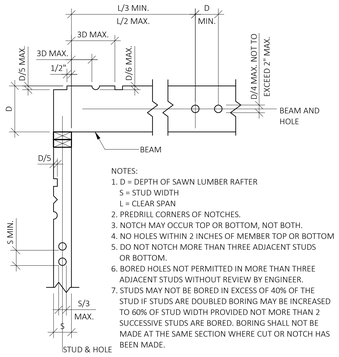

NOTES:
1. D = DEPTH OF SAWN LUMBER RAFTER
   S = STUD WIDTH
   L = CLEAR SPAN
2. PREDRILL CORNERS OF NOTCHES.
3. NOTCH MAY OCCUR TOP OR BOTTOM, NOT BOTH.
4. NO HOLES WITHIN 2 INCHES OF MEMBER TOP OR BOTTOM
5. DO NOT NOTCH MORE THAN THREE ADJACENT STUDS OR BOTTOM.
6. BORED HOLES NOT PERMITTED IN MORE THAN THREE ADJACENT STUDS WITHOUT REVIEW BY ENGINEER.
7. STUDS MAY NOT BE BORED IN EXCESS OF 40% OF THE STUD IF STUDS ARE DOUBLED BORING MAY BE INCREASED TO 60% OF STUD WIDTH PROVIDED NOT MORE THAN 2 SUCCESSIVE STUDS ARE BORED. BORING SHALL NOT BE MADE AT THE SAME SECTION WHERE CUT OR NOTCH HAS BEEN MADE.

12 ALLOWABLE HOLES FOR STRUCTURAL SAWN LUMBER MEMBERS

08-103-01
N.T.S.

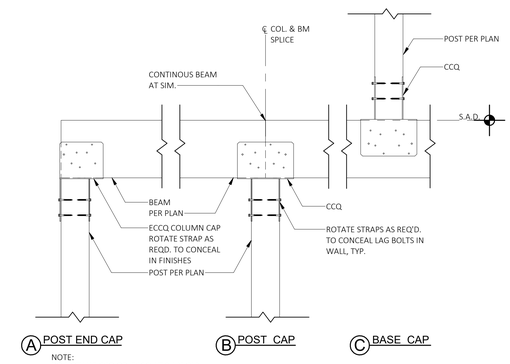

NOTE:
DO NOT USE CCQ OR ECCQ AT 8 3/4 GLB AND 7x PSL USE CC OR ECC CAP ONLY.

8 TYPICAL BEAM TO POST CONNECTION

08-102-01
1" = 1'-0"

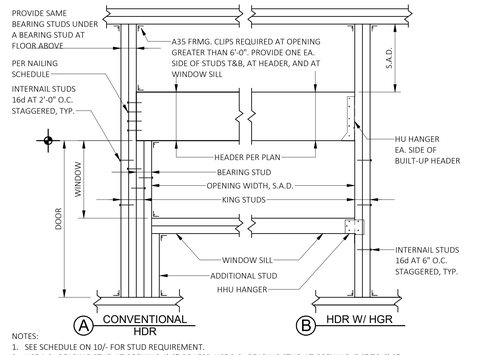

NOTES:
1. SEE SCHEDULE ON 10/- FOR STUD REQUIREMENT.
2. USE 1-2x BEARING STUD AT OPENING 4'-0" OR LESS, USE 2-2x BEARING STUD AT OPENING 4'-0" TO 6'-0". FOR OPENING GREATER THAN 6'-0", NOTIFY E.O.R.
3. FOR 2x4 WALLS USE A34 CLIPS.

4 TYPICAL FRAMING OPENINGS IN WALL

08-101-07
N.T.S.

PYATOK
1611 TELEGRAPH AVE.
SUITE 200
OAKLAND, CA 94612
T. 510.465.7010 | F. 510.465.8575
www.pyatok.com

element
structural engineers, inc.
39675 Cedar Blvd., Suite 295C
Newark, California 94560
Tel: 510.573.1557
eFax: 973.924.0663
www.elementse.com

Owner

2700 INTERNATIONAL
OAKLAND, CA 94601

STAMP:
REGISTERED PROFESSIONAL ENGINEER
TROY N. FONTELERA
S 5536
STRUCTURAL
STATE OF CALIFORNIA
SIGNED DATE: 12/09/2022

ISSUE SCHEDULE

NO.	ISSUE	DATE
	100% SD	5/11/2022
	50% DD	7/15/2022
	100% DD	9/16/2022
	50% CD	11/18/2022
	PERMIT SET	12/09/2022

REVISION SCHEDULE

NO.	ISSUE	DATE

JOB NUMBER:	ESE# 3395
DRAWN BY:	YL/BDT
CHECKED BY:	JTE
ISSUE DATE:	12/09/2022
SCALE:	As indicated

TITLE:
WOOD DETAILS

SHEET:
S8.01

PRELIMINARY - Not for Construction -

© 2019 PYATOK ARCHITECTURE & URBAN DESIGN

12/7/2022 5:07:53 PM

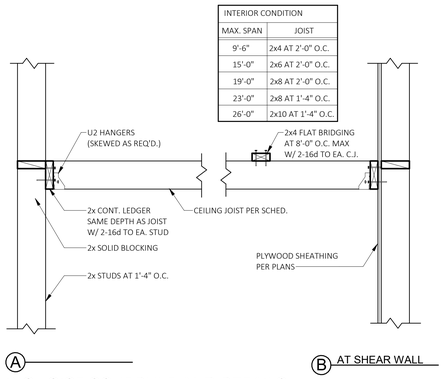

13 CEILING JOIST SCHEDULE AND DETAILS

08-401-38
1" = 1'-0"

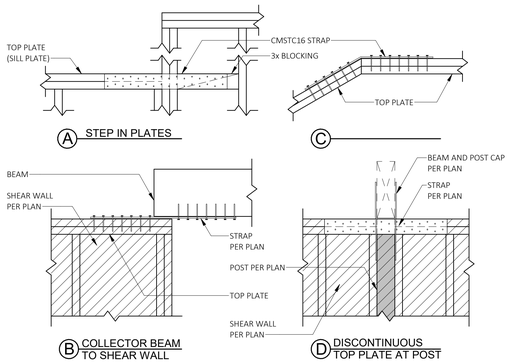

9 HORIZONTAL STRAP DETAIL

08-204-01
1" = 1'-0"

MARK	NO. OF SIDES	EDGE NAIL 10d COMMON SHORTS (2 1/2"x0.148") SEE DETAIL 6C/- WHERE SPECIFIED AS STAGGERED	STUD WIDTH AT EDGE NAILING		SOLE PLATE OR TOP PLATE CONNECTIONS (EITHER NAILS OR SCREWS)		SHEAR CLIPS W/ 8d COMMON NAIL U.O.N.			MUDSILL ANCHORS, SEE DET. 8/-.		TITEN HD 5/8"ø EMBED. DEPTH 4" MIN. INTO CONCRETE AT RETROFIT CONDITION	URFP AT RETROFIT CONDITION	ALLOWABLE SHEAR (plf)
			SIZE	DETAIL	16d SINKER NAILS	SDS 1/4x5	LTP4	RBC	A35	2x MUDSILL	3x MUDSILL			
6	SINGLE	6"	2x	6B/-	6" O.C.	1'-6" O.C.	1'-6" O.C.	1'-0" O.C.	1'-10" O.C.	5/8" AT 4'-0"	5/8" AT 4'-0"	AT 4'-0"	AT 3'-6"	340
4	SINGLE	4"	2x	6B/-	4" O.C.	1'-0" O.C.	1'-0" O.C.	8" O.C.	1'-2" O.C.	5/8" AT 2'-8"	5/8" AT 3'-6"	AT 2'-8"	AT 2'-8"	510
3	SINGLE	3" STAGGERED	2x	6B/-	3" O.C.	10" O.C.	10" O.C.	6" O.C.	10" O.C.	5/8" AT 2'-0"	5/8" AT 2'-6"	AT 2'-0"	AT 1'-6"	665
2	SINGLE	2" STAGGERED	3x	6B/- or 6E/-	N/A	6" O.C.	6" O.C.	6" O.C.	8" O.C.	5/8" AT 1'-6"	5/8" AT 2'-0"	AT 1'-6"	AT 1'-6"	870
6D	DOUBLE	6"	2x	6B/-	3" O.C.	10" O.C.	8" O.C.	1'-0" O.C EACH SIDE	10" O.C.	5/8" AT 2'-0"	5/8" AT 2'-6"	AT 2'-0"	AT 1'-6"	680
4D	DOUBLE	4"	3x	6B/- or 6D/-	N/A	6" O.C.	6" O.C.	8" O.C EACH SIDE	6" O.C.	N/A	5/8" AT 1'-6"	AT 1'-4"	AT 1'-4"	1020
3D	DOUBLE	3" STAGGERED	3x	6B/- or 6D/-	N/A	4" O.C.	10" O.C. EACH SIDE	6" O.C EACH SIDE	10" O.C. EACH SIDE	N/A	5/8" AT 1'-0"	AT 1'-0"	N/A	1330
2D	DOUBLE	2" STAGGERED	3x	6B/- or 6D/-	N/A	3" O.C.	6" O.C. EACH SIDE	N/A	8" O.C. EACH SIDE	N/A	5/8" AT 1'-0"	AT 8"	N/A	1740

5 SHEAR WALL SCHEDULE - STRUCT 1 PLYWOOD

08-200-01
N.T.S.

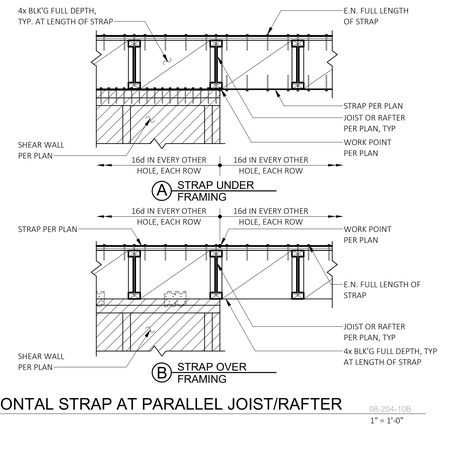

10 HORIZONTAL STRAP AT PARALLEL JOIST/RAFTER

08-204-10B
1" = 1'-0"

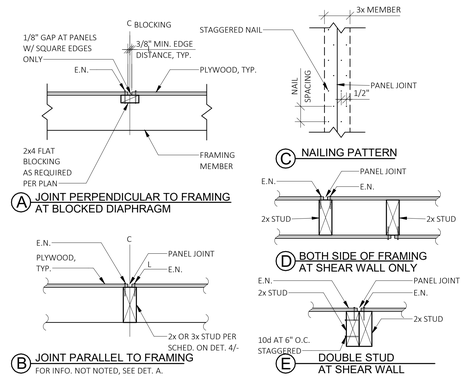

6 PLYWOOD NAILING

08-200-02
N.T.S.

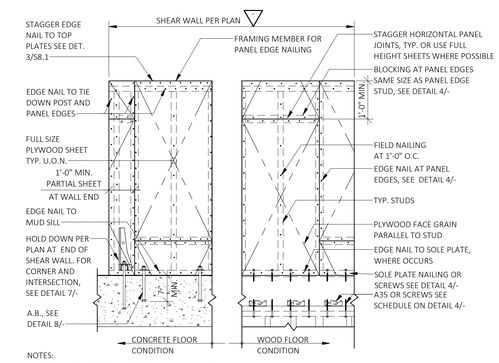

2 SHEAR WALL ELEVATION

08-200-05
N.T.S.

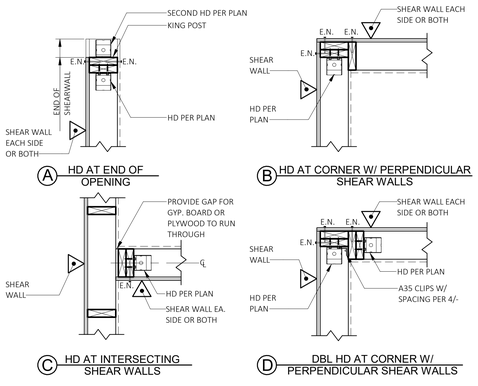

7 SHEAR TRANSFER AND/OR HD LOCATION

08-204-07
1" = 1'-0"

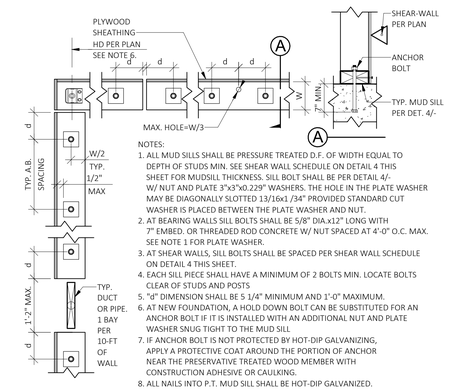

8 MUD SILL AND ANCHOR BOLT REQUIREMENTS

08-200-04
1" = 1'-0"

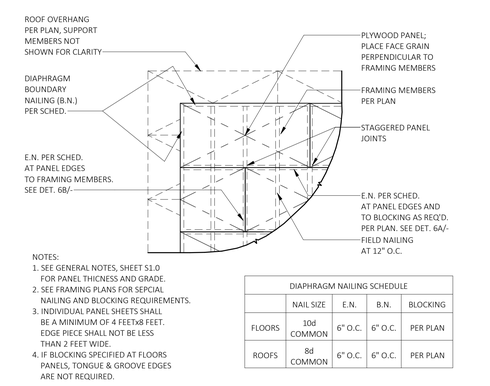

DIAPHRAGM NAILING SCHEDULE				
	NAIL SIZE	E.N.	B.N.	BLOCKING
FLOORS	10d COMMON	6" O.C.	6" O.C.	PER PLAN
ROOFS	8d COMMON	6" O.C.	6" O.C.	PER PLAN

3 ROOF OR FLOOR DIAPHRAGM

08-200-03
N.T.S.

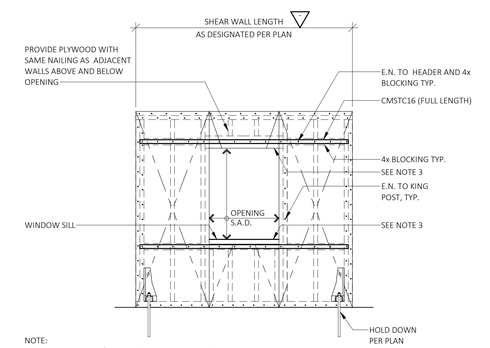

4 STRAPPED SHEAR WALL ELEVATION

08-200-06
N.T.S.

PYATOK
1611 TELEGRAPH AVE.
SUITE 200
OAKLAND, CA 94612
T. 510.465.7010 | F. 510.465.8575
www.pyatok.com

element structural engineers, inc.
39675 Cedar Blvd., Suite 295C
Newark, California 94560
Tel: 510.573.1557
eFax: 973.924.0663
www.elementse.com

Owner

2700 INTERNATIONAL
OAKLAND, CA 94601

STAMP:
REGISTERED PROFESSIONAL ENGINEER TROY N. FONTELERA S 5536 STRUCTURAL STATE OF CALIFORNIA
SIGNED DATE: 12/09/2022

ISSUE SCHEDULE

NO.	ISSUE	DATE
	100% SD	5/11/2022
	50% DD	7/15/2022
	100% DD	9/16/2022
	50% CD	11/18/2022
	PERMIT SET	12/09/2022

REVISION SCHEDULE

NO.	ISSUE	DATE

JOB NUMBER:	ESE# 3395
DRAWN BY:	YL/BDT
CHECKED BY:	JTE
ISSUE DATE:	12/09/2022
SCALE:	As indicated

TITLE:
WOOD DETAILS

SHEET:
S8.02

PRELIMINARY - Not for Construction -

© 2019 PYATOK ARCHITECTURE & URBAN DESIGN

12/7/2022 5:07:59 PM

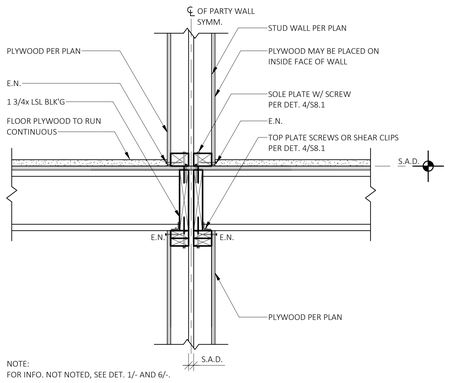

NOTE:
FOR INFO. NOT NOTED, SEE DET. 1/- AND 6/-.

9 1-HR INTERIOR PARTY WALL PARALLEL AND PERPENDICULAR TO JOIST

3395-S8.03-09
1" = 1'-0"

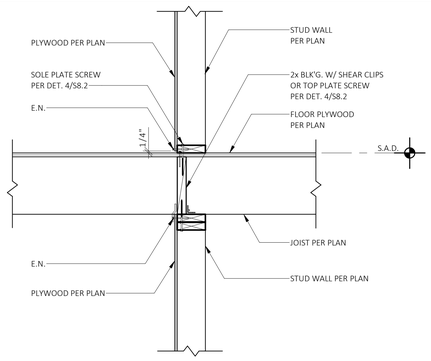

5 INTERIOR SINGLE SHEAR WALL PERPENDICULAR TO JOIST

08-301-05
1" = 1'-0"

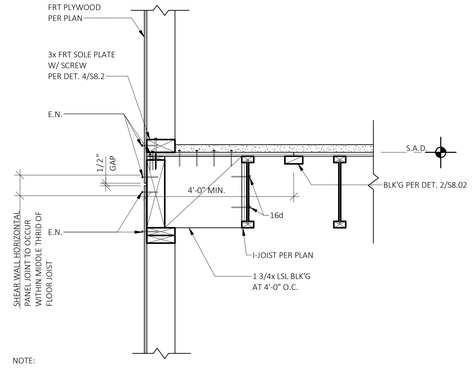

NOTE:
NAILS IN USE WITH FRT LUMBER SHALL BE H.D.G
FOR INFORMATION, NOT NOTED SEE 1/-.

2 TYPE III EXTERIOR SINGLE SHEAR WALL PERPENDICULAR TO JOIST

3395-S8.03-02
1" = 1'-0"

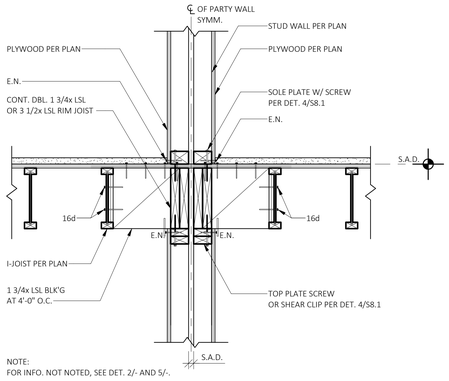

NOTE:
FOR INFO. NOT NOTED, SEE DET. 2/- AND 5/-.

10 1-HR INTERIOR PARTY WALL PARALLEL AND PERPENDICULAR TO JOIST

3395-S8.03-10
1" = 1'-0"

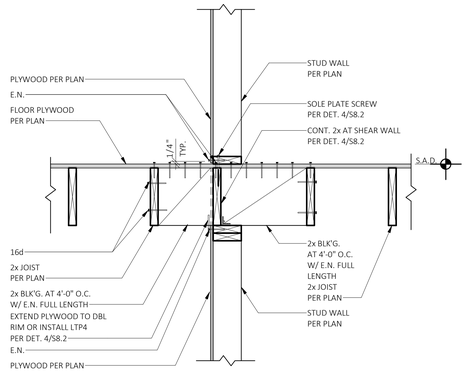

6 INTERIOR SINGLE SHEAR WALL PARALLEL TO JOIST

08-301-06
1" = 1'-0"

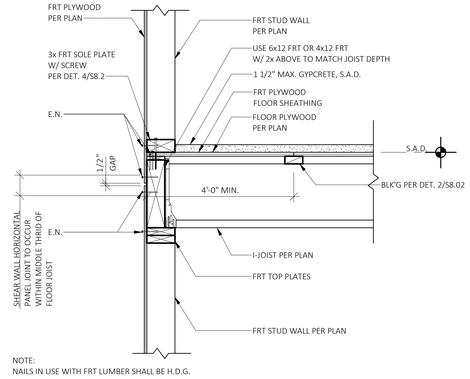

NOTE:
NAILS IN USE WITH FRT LUMBER SHALL BE H.D.G.

1 TYPE III EXTERIOR SINGLE SHEAR WALL PERPENDICULAR TO JOIST

3395-S8.03-01
1" = 1'-0"

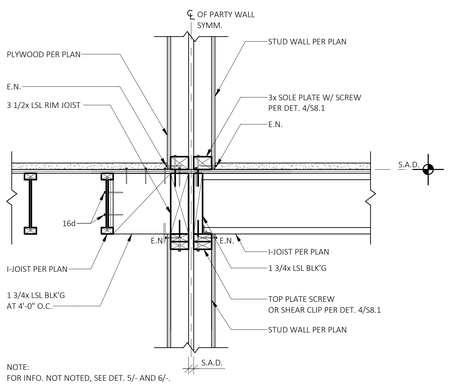

NOTE:
FOR INFO. NOT NOTED, SEE DET. 5/- AND 6/-.

11 1-HR INTERIOR PARTY WALL PARALLEL AND PERPENDICULAR TO JOIST

3395-S8.03-15
1" = 1'-0"

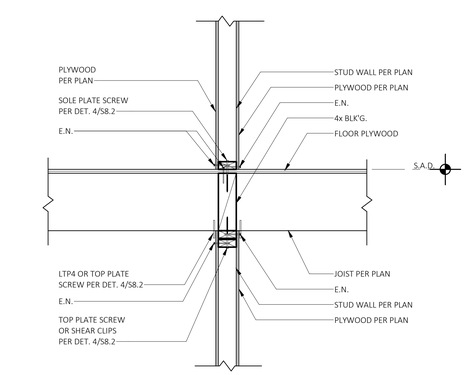

7 INTERIOR DOUBLE SHEAR WALL PERPENDICULAR TO JOIST

08-301-07
1" = 1'-0"

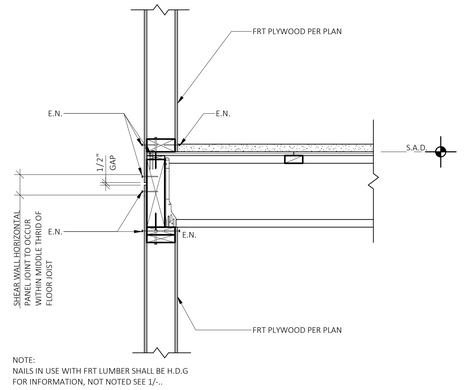

NOTE:
NAILS IN USE WITH FRT LUMBER SHALL BE H.D.G
FOR INFORMATION, NOT NOTED SEE 1/-.

3 TYPE III EXTERIOR SINGLE SHEAR WALL PERPENDICULAR TO JOIST

3395-S8.03-03
1" = 1'-0"

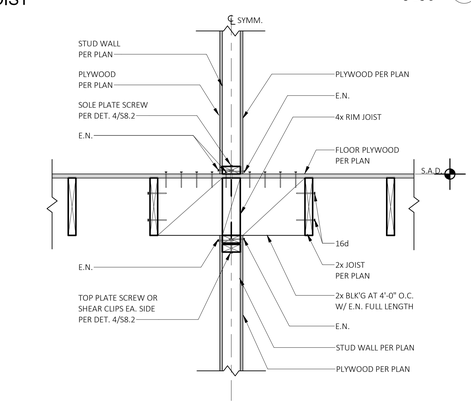

8 INTERIOR DOUBLE SHEAR WALL PARALLEL TO JOIST

08-301-08
1" = 1'-0"

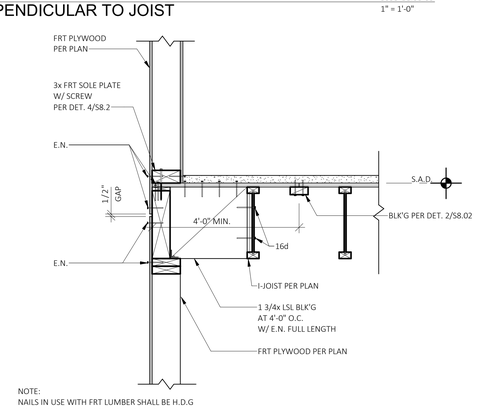

NOTE:
NAILS IN USE WITH FRT LUMBER SHALL BE H.D.G
FOR INFORMATION, NOT NOTED SEE 1/-.

4 TYPE III EXTERIOR SINGLE SHEAR WALL PERPENDICULAR TO JOIST

3395-S8.03-04
1" = 1'-0"

PYATOK
1611 TELEGRAPH AVE.
SUITE 200
OAKLAND, CA 94612
T. 510.465.7010 | F. 510.465.8575
www.pyatok.com

element
structural engineers, inc.
39675 Cedar Blvd., Suite 295C
Newark, California 94560
Tel: 510.573.1557
eFax: 973.924.0663
www.elementse.com

Owner

2700 INTERNATIONAL

OAKLAND, CA 94601

STAMP:

REGISTERED PROFESSIONAL ENGINEER
THOMAS N. FONTELERA
S 5536
STRUCTURAL
STATE OF CALIFORNIA

SIGNED DATE: 12/09/2022

ISSUE SCHEDULE

NO.	ISSUE	DATE
	100% SD	5/11/2022
	50% DD	7/15/2022
	100% DD	9/16/2022
	50% CD	11/18/2022
	PERMIT SET	12/09/2022

REVISION SCHEDULE

NO.	ISSUE	DATE

JOB NUMBER:	ESE# 3395
DRAWN BY:	YL/BDT
CHECKED BY:	JTE
ISSUE DATE:	12/09/2022
SCALE:	1" = 1'-0"

TITLE:
WOOD DETAILS

SHEET:
S8.03

PRELIMINARY - Not for Construction -

© 2019 PYATOK ARCHITECTURE & URBAN DESIGN

12/7/2022 5:08:05 PM

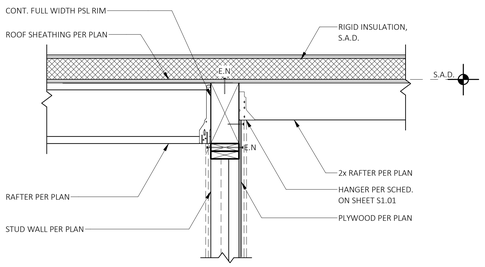

13 INTERIOR SHEARWALL PERPENDICULAR TO UNIT RAFTERS AT CORRIDOR
3395-S8.04-13
1" = 1'-0"

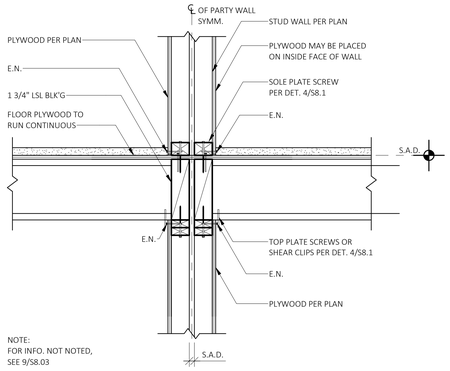

NOTE:
FOR INFO. NOT NOTED, SEE 9/S8.03

9 INTERIOR PARTY WALL PERPENDICULAR TO JOIST
08-305-13
1" = 1'-0"

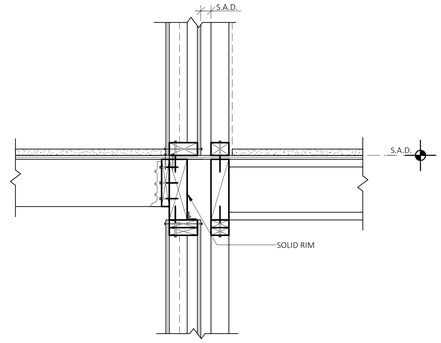

NOTE:
FOR INFO NOT NOTED, SEE DET 11/S8.03.

5 1-HOUR UNIT FRAMING PERPENDICULAR TO CORRIDOR JOIST WITH PARTITION WALL AT UNIT
3395-S8.04-05
1" = 1'-0"

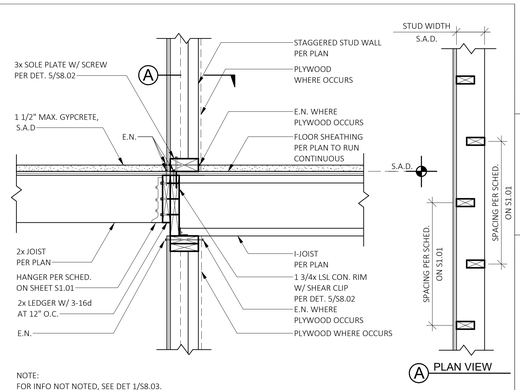

NOTE:
FOR INFO NOT NOTED, SEE DET 1/S8.03.

1 UNIT FRAMING PERPENDICULAR TO CORRIDOR JOIST
3395-S8.04-01
1" = 1'-0"

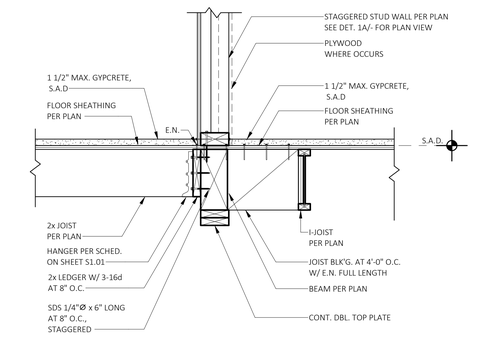

14 INTERIOR SHEARWALL PERPENDICULAR TO UNIT RAFTERS AT CORRIDOR
3395-S8.04-14
1" = 1'-0"

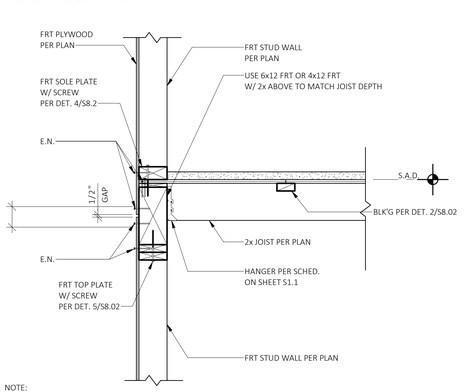

NOTE:
FOR INFO. NOT NOTED, SEE DET. 10/S8.03.

10 2-HOUR INTERIOR PARTY WALL PARALLEL TO JOIST
3395-S8.04-10
1" = 1'-0"

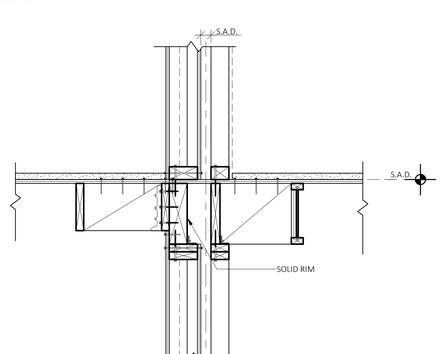

NOTE:
FOR INFO NOT NOTED, SEE DET 11/S8.03.

6 1-HOUR UNIT FRAMING PARALLEL TO CORRIDOR JOIST WITH PARTITION WALL AT UNIT
3395-S8.04-06
1" = 1'-0"

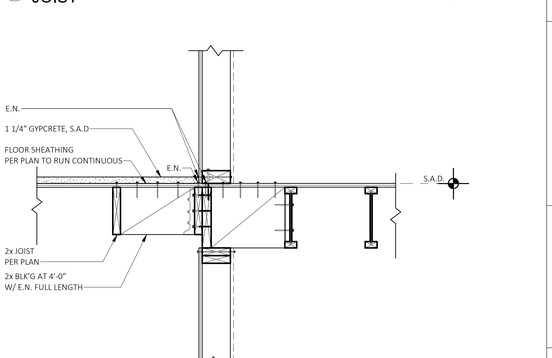

NOTE:
FOR INFO. NOT NOTED, SEE DET. 1/-

2 1-HOUR UNIT FRAMING PARALLEL TO CORRIDOR JOIST
1" = 1'-0"

NOTE:
FOR INFO. NOT NOTED, SEE DET. 1/-

15 UNIT ENTRY AT CORRIDOR
1" = 1'-0"

NOTE:
FOR INFO. NOT NOTED, SEE DET. 10/S8.03.

11 2-HOUR INTERIOR PARTY WALL PARALLEL AND PERPENDICULAR TO JOIST
3395-S8.04-11
1" = 1'-0"

NOTE:
FOR INFO NOT NOTED, SEE DET 5/-.

7 2-HOUR UNIT FRAMING PERPENDICULAR TO CORRIDOR JOIST
3395-S8.04-07
1" = 1'-0"

NOTE:
FOR INFO. NOT NOTED, SEE DET. 1/-

3 1-HOUR UNIT FRAMING PERPENDICULAR TO CORRIDOR JOIST
1" = 1'-0"

NOTE:
FOR INFO. NOT NOTED, SEE DET. 1/8.03

12 1-HOUR CORRIDOR PERPENDICULAR TO EXTERIOR WALL
1" = 1'-0"

NOTE:
FOR INFO NOT NOTED, SEE DET 5/-.

8 1-HOUR UNIT FRAMING PARALLEL TO CORRIDOR JOIST WITH PARTITION WALL AT UNIT
3395-S8.04-07
1" = 1'-0"

NOTE:
FOR INFO. NOT NOTED, SEE DET. 1/-

4 1-HOUR UNIT FRAMING PARALLEL TO CORRIDOR JOIST
1" = 1'-0"

PYATOK
1611 TELEGRAPH AVE.
SUITE 200
OAKLAND, CA 94612
T. 510.465.7010 | F. 510.465.8575
www.pyatok.com

element structural engineers, inc.
39675 Cedar Blvd., Suite 295C
Newark, California 94560
Tel: 510.573.1557
eFax: 973.924.0663
www.elementse.com

Owner

2700 INTERNATIONAL
OAKLAND, CA 94601

STAMP:
REGISTERED PROFESSIONAL ENGINEER TROY N. FONTELERA S 5536 STRUCTURAL STATE OF CALIFORNIA
SIGNED DATE: 12/09/2022

ISSUE SCHEDULE

NO.	ISSUE	DATE
	100% SD	5/11/2022
	50% DD	7/15/2022
	100% DD	9/16/2022
	50% CD	11/18/2022
	PERMIT SET	12/09/2022

REVISION SCHEDULE

NO.	ISSUE	DATE

JOB NUMBER:	ESE# 3395
DRAWN BY:	YL/BDT
CHECKED BY:	JTE
ISSUE DATE:	12/09/2022
SCALE:	1" = 1'-0"

TITLE:
WOOD DETAILS

SHEET:
S8.04

PRELIMINARY - Not for Construction -

© 2019 PYATOK ARCHITECTURE & URBAN DESIGN

12/7/2022 5:08:11 PM

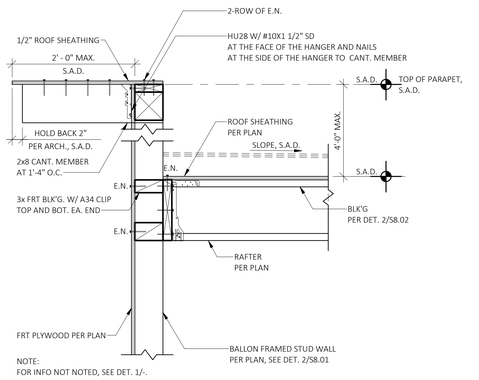

13 PARAPET OUTRIGGER TO BALLON FRAMED WALL
1" = 1'-0"

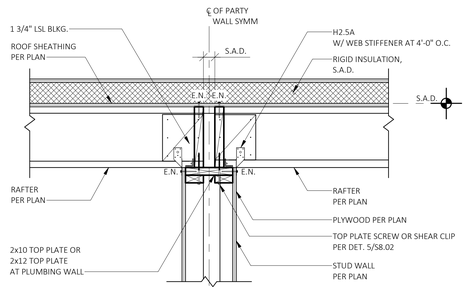

9 1-HOUR WALL PERPENDICULAR TO RAFTER
3395-S8.05-09
1" = 1'-0"

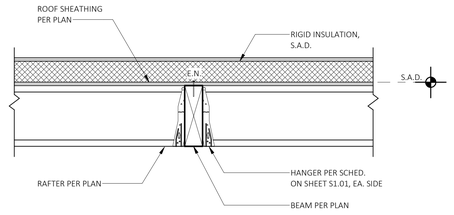

5 BEAM PERPENDICULAR TO RAFTER
08-306-09
1" = 1'-0"

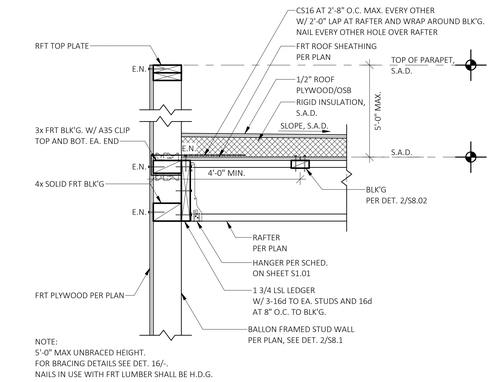

1 TYPE III BALLOON FRAMED WALL PERPENDICULAR TO RAFTER
3395-S8.05-01
1" = 1'-0"

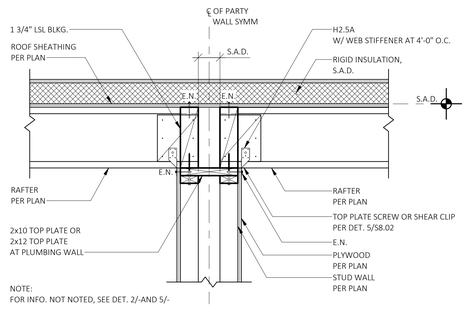

10 1-HOUR INTERIOR SHEARWALL PARALLEL WITH RAFTER
3395-SB.05-10
1" = 1'-0"

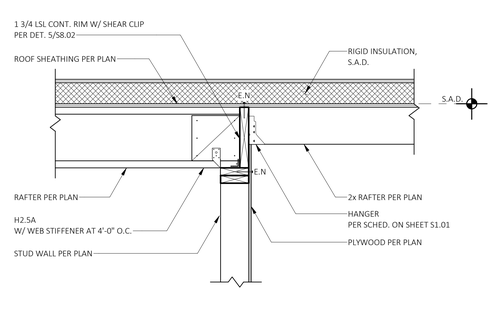

7 INTERIOR SHEARWALL PERPENDICULAR TO UNIT RAFTERS AT CORRIDOR
3395-S8.05-07
1" = 1'-0"

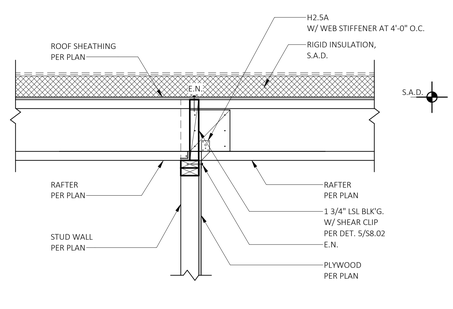

3 TYPE III INTERIOR SHEARWALL PERPENDICULAR TO RAFTER
3395-S8.05-03
1" = 1'-0"

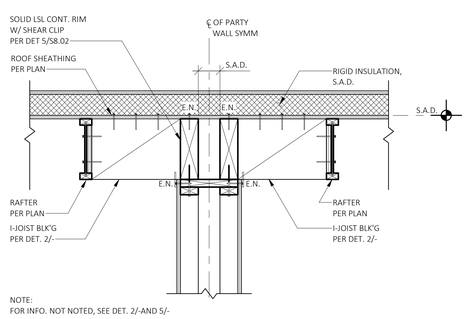

12 2-HOUR WALL PARALLEL WITH RAFTER
3395-S8.05-12
1" = 1'-0"

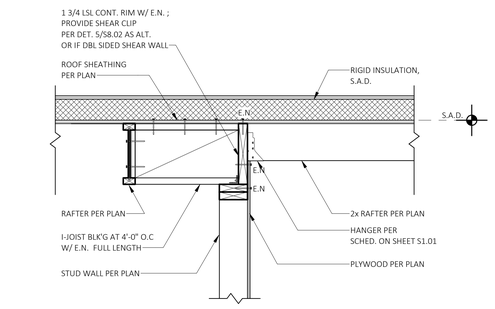

8 INTERIOR SHEARWALL PARALLEL TO UNIT RAFTERS AT CORRIDOR
1" = 1'-0"

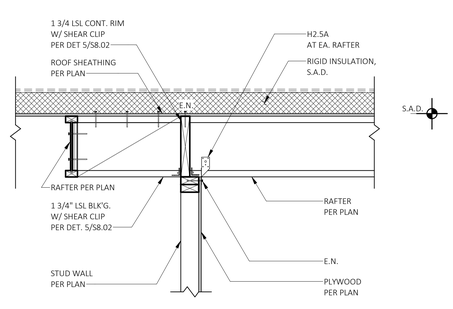

4 TYPE III INTERIOR SHEARWALL PARALLELTO RAFTE
3395-S8.05-04
1" = 1'-0"

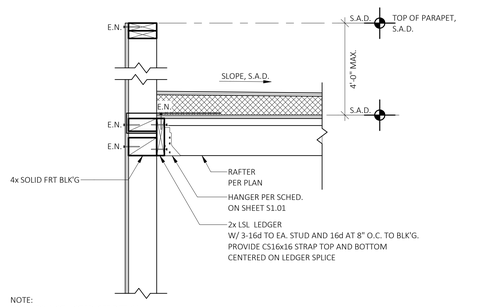

6 BALLOON FRAMED WALL PERPENDICULAR TO RAFTER
3395-S8.05-06
1" = 1'-0"

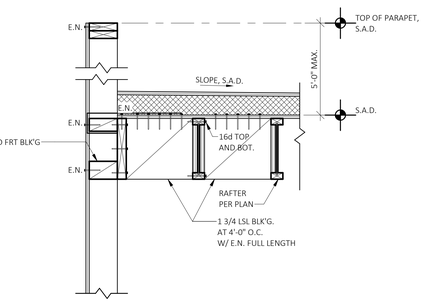

2 TYPE III BALLOON FRAMED WALL PARALLEL TO RAFTER
3395-S8.05-02
1" = 1'-0"

PYATOK
1611 TELEGRAPH AVE.
SUITE 200
OAKLAND, CA 94612
T. 510.465.7010 | F. 510.465.8575
www.pyatok.com

element
structural engineers, inc.
39675 Cedar Blvd., Suite 295C
Newark, California 94560
Tel: 510.573.1557
eFax: 973.924.0663
www.elementse.com

Owner

2700 INTERNATIONAL
OAKLAND, CA 94601

STAMP:
REGISTERED PROFESSIONAL ENGINEER
TROY N. FONTELERA
S 5536
STRUCTURAL
SIGNED DATE: 12/09/2022

ISSUE SCHEDULE

NO.	ISSUE	DATE
	100% SD	5/11/2022
	50% DD	7/15/2022
	100% DD	9/16/2022
	50% CD	11/18/2022
	PERMIT SET	12/09/2022

REVISION SCHEDULE

NO.	ISSUE	DATE

JOB NUMBER:	ESE# 3395
DRAWN BY:	YL/BDT
CHECKED BY:	JTE
ISSUE DATE:	12/09/2022
SCALE:	1" = 1'-0"

TITLE:
WOOD DETAILS

SHEET:
S8.05

PRELIMINARY - Not for Construction -

© 2019 PYATOK ARCHITECTURE & URBAN DESIGN

12/7/2022 5:08:17 PM

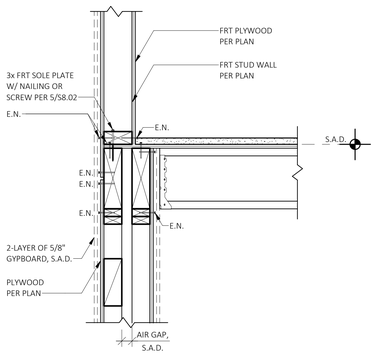

13 ROOF TOWER AT ROOF

3395-S8.07-13

1" = 1'-0"

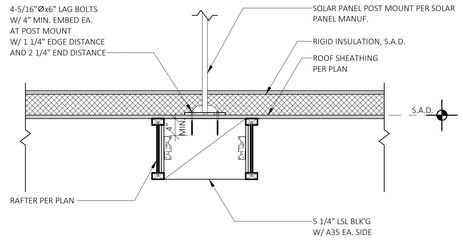

NOTE:
SPECIFICE REQUIREMENT FOR FRAMING AND PV ATTACHMENT NEED
TO BE VERIFIED W/ SPECIFIC PV MANUFACTURER AND SYSTEM.

9 SOLAR PANEL ATTACHMENT TO ROOF

1" = 1'-0"

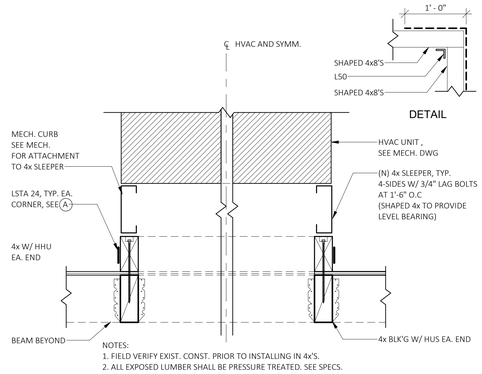

NOTES:
1. FIELD VERIFY EXIST. CONST. PRIOR TO INSTALLING IN 4x'S.
2. ALL EXPOSED LUMBER SHALL BE PRESSURE TREATED. SEE SPECS.

5 FRAMING AT HVAC UNIT

1" = 1'-0"

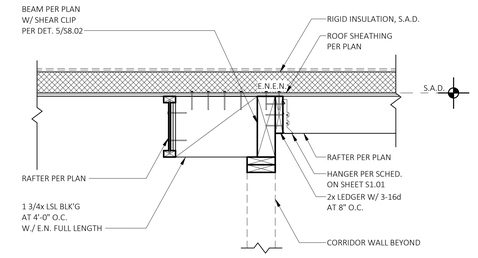

1 UNIT ENTRY FRAMING AT CORRIDOR AT THE ROOF

1" = 1'-0"

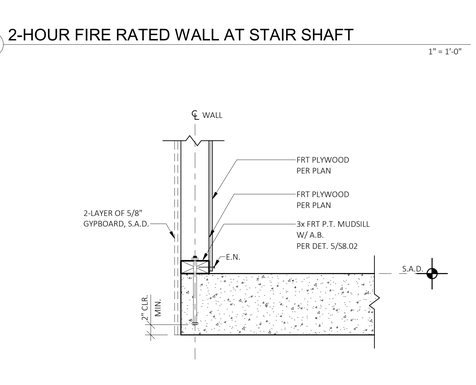

NOTE:
FOR INFO NOT NOTED, SEE DET. 13/S8.03.

14 2-HOUR FIRE RATED WALL AT STAIR SHAFT

3395-S8.07-14

1" = 1'-0"

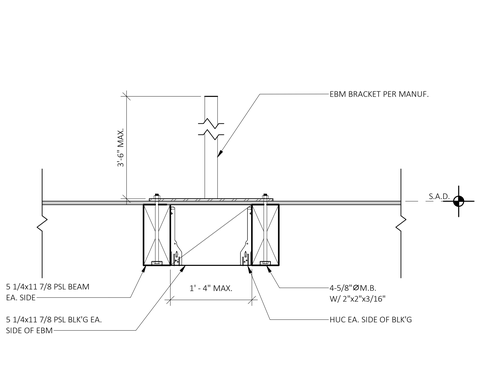

10 EBM ATTACHMENT TO ROOF

1" = 1'-0"

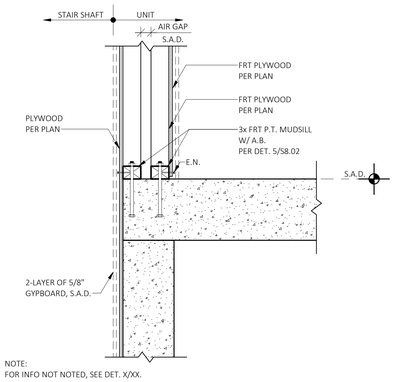

NOTE:
FOR INFO NOT NOTED, SEE DET. X/XX.

15 2-HOUR FIRE RATED WALL AT STAIR SHAFT

1" = 1'-0"

11 EBM ANCHOR - ALTERNATE DETAIL

1" = 1'-0"

NOTE:
FOR INFO NOT NOTED, SEE DET. X/XX.

16 EXTERIOR STAIR SHAFT AT PODIUM SLAB

1" = 1'-0"

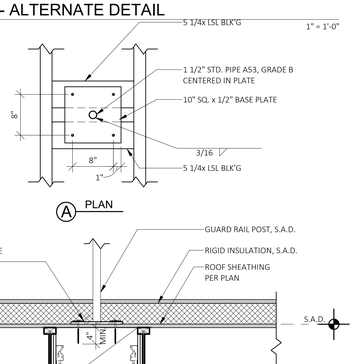

12 GUARD RAIL ATTACHMENT TO ROOF

1" = 1'-0"

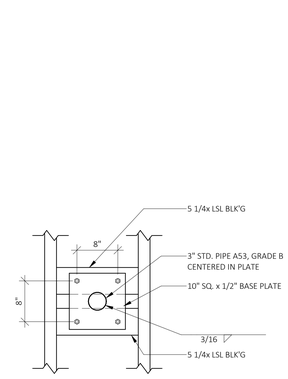

8 MECHANICAL PLATFORM AT ROOF

1" = 1'-0"

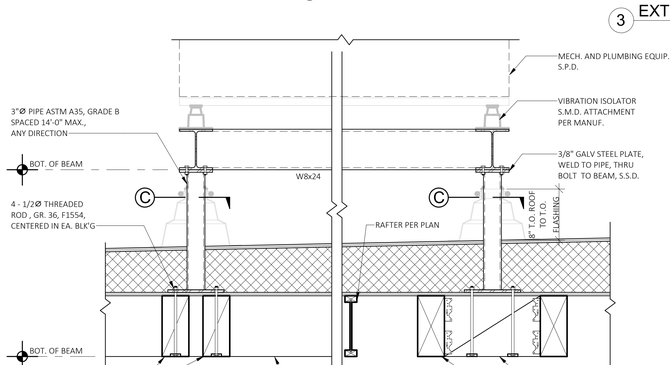

3 EXTERIOR SHEARWALL PERPENDICULAR TO RAFTER

1" = 1'-0"

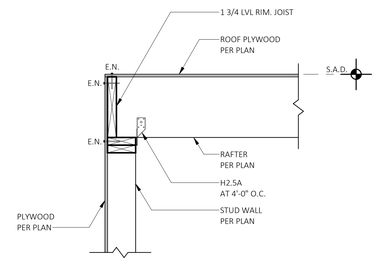

4 EXTERIOR SHEARWALL PARALLEL TO RAFTER

08-700-55

1" = 1'-0"

PYATOK
1611 TELEGRAPH AVE.
SUITE 200
OAKLAND, CA 94612
T. 510.465.7010 | F. 510.465.8575
www.pyatok.com

element
structural engineers, inc.
39675 Cedar Blvd., Suite 295C
Newark, California 94560
Tel: 510.573.1557
eFax: 973.924.0663
www.elementse.com

Owner

2700 INTERNATIONAL

OAKLAND, CA 94601

STAMP:

REGISTERED PROFESSIONAL ENGINEER
THOMAS N. FONTELERA
S 5536
STRUCTURAL
STATE OF CALIFORNIA

SIGNED DATE: 12/09/2022

ISSUE SCHEDULE

NO.	ISSUE	DATE
	100% SD	5/11/2022
	50% DD	7/15/2022
	100% DD	9/16/2022
	50% CD	11/18/2022
	PERMIT SET	12/09/2022

REVISION SCHEDULE

NO.	ISSUE	DATE

JOB NUMBER:	ESE# 3395
DRAWN BY:	YL/BDT
CHECKED BY:	JTE
ISSUE DATE:	12/09/2022
SCALE:	1" = 1'-0"

TITLE:

WOOD DETAILS

SHEET:

S8.06

PRELIMINARY - Not for Construction -

© 2019 PYATOK ARCHITECTURE & URBAN DESIGN

12/7/2022 5:08:23 PM

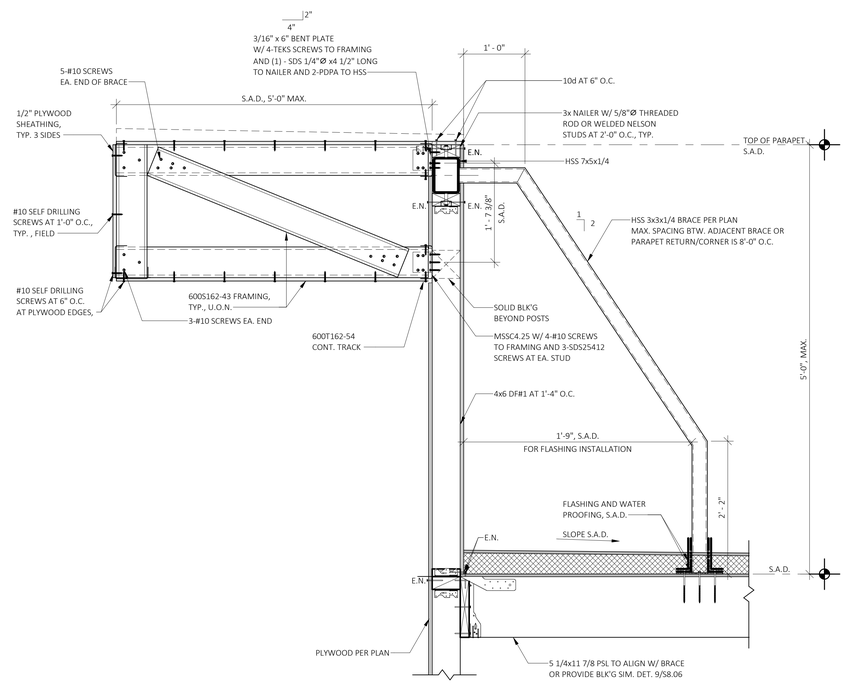

NOTE FOR INFO NOT NOTED, SEE DET. 1/- AND 2/-

6 PARAPET BRACING AT EXTERIOR WALL FOR PARAPET W/ 5'-0" ARCHITECTURAL CORNICE

1" = 1'-0"

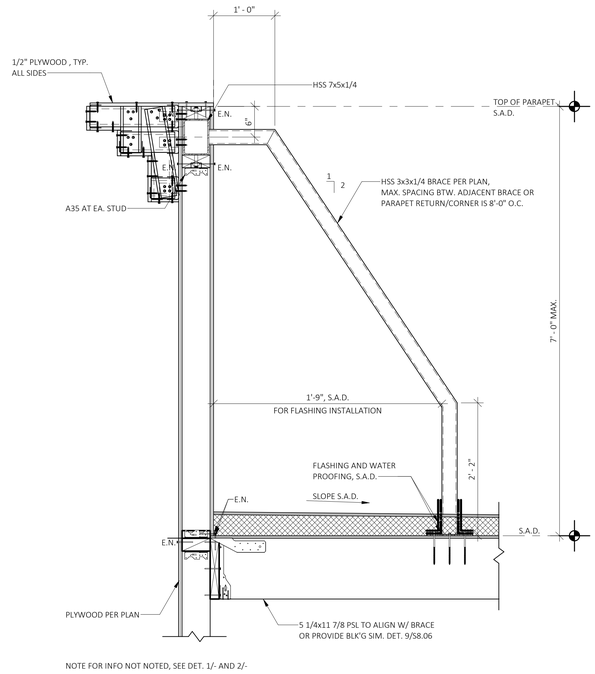

NOTE FOR INFO NOT NOTED, SEE DET. 1/- AND 2/-

8 PARAPET BRACING AT EXTERIOR WALL FOR PARAPET GREATER THAN 5'-0"

1" = 1'-0"

PYATOK
1611 TELEGRAPH AVE.
SUITE 200
OAKLAND, CA 94612
T. 510.465.7010 | F. 510.465.8575
www.pyatok.com

element
structural engineers, inc.
39675 Cedar Blvd., Suite 295C
Newark, California 94560
Tel: 510.573.1557
eFax: 973.924.0663
www.elementse.com

Owner

2700 INTERNATIONAL
OAKLAND, CA 94601

STAMP:

REGISTERED PROFESSIONAL ENGINEER
TRUY N. FONTELERA
S 5536
STRUCTURAL
STATE OF CALIFORNIA

SIGNED DATE: 12/09/2022

ISSUE SCHEDULE

NO.	ISSUE	DATE
	100% SD	5/11/2022
	50% DD	7/15/2022
	100% DD	9/16/2022
	50% CD	11/18/2022
	PERMIT SET	12/09/2022

REVISION SCHEDULE

NO.	ISSUE	DATE

JOB NUMBER:	ESE# 3395
DRAWN BY:	YL/BDT
CHECKED BY:	JTE
ISSUE DATE:	12/09/2022
SCALE:	1" = 1'-0"

TITLE:

WOOD DETAILS

SHEET:

S8.07

PRELIMINARY - Not for Construction -

© 2019 PYATOK ARCHITECTURE & URBAN DESIGN

12/7/2022 5:08:29 PM

BACK-TO-BACK REINFORCED ANCHORAGE (BB-RA)

MODEL NUMBER	COLUMN WIDTH	ANCHOR DIA & GRADE [1,2]	EMBED DEPTH, l_e [3]	MIN END DIST, C_{a1} [4]	MIN EDGE DIST, C_{a2} [5]	STIRRUPS [8]	SHEAR TIES [6,7]
HFXPIC12	12"	1-1/8" HS @ Columns & 5/8" HS @ Mid Beam	23"	22 ¾"	13"	8 - #4	#3 (MIN) @ 3" O.C.
HFXPIC15	15"					10 - #4	
HFXPIC18	18"					10 - #4	
HFXPIC21	21"					12 - #4	

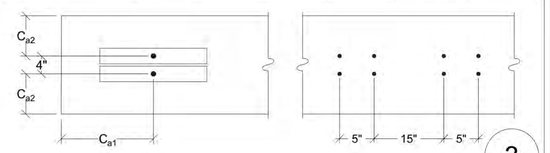

3

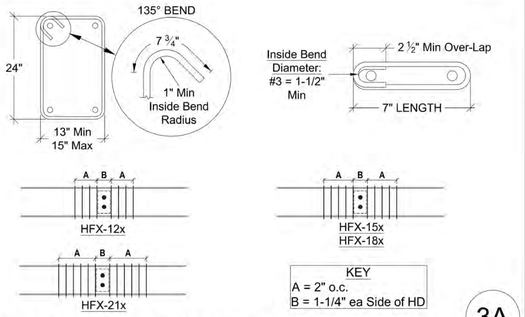

3A

BB-RA SHEAR TIES & STIRRUPS

SINGLE REINFORCED ANCHORAGE (RA)

MODEL NUMBER	COLUMN WIDTH	ANCHOR DIA & GRADE [1,2]	EMBED DEPTH, l_e [3]	MIN END DIST, C_{a1} [4]	MIN EDGE DIST, C_{a2} [5]	STIRRUPS [8]	SHEAR TIES [6,7]
HFXPIC12	12"	1-1/8" HS @ Columns & 5/8" HS @ Mid Beam	16"	16 ¾"	12"	4 - #4	#3 (MIN) @ 3" O.C.
HFXPIC15	15"					6 - #4	
HFXPIC18	18"					6 - #4	
HFXPIC21	21"					6 - #4	

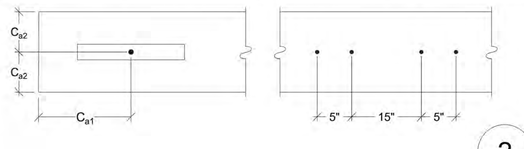

2

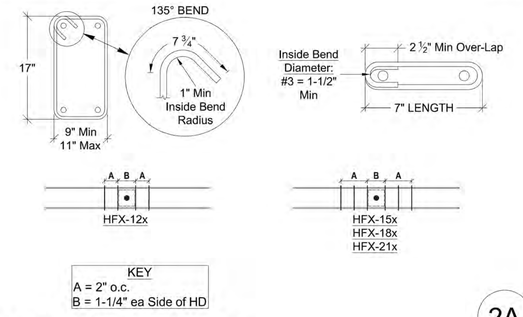

2A

RA SHEAR TIES & STIRRUPS

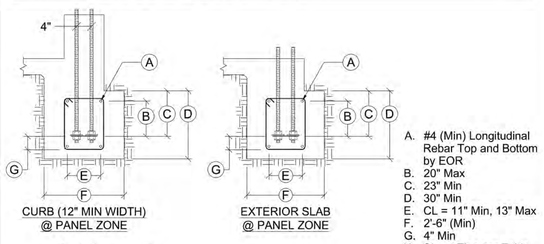

A. #4 (Min) Longitudinal Rebar Top and Bottom by EOR
B. 20" Max
C. 23" Min
D. 30" Min
E. CL = 11" Min, 13" Max
F. 2'-6" (Min)
G. 4" Min
H. Shear Ties per Table
I. C_{a1} per Table
J. 1-1/4" clear spacing from top of concrete at first shear tie
K. 1" c.c. Max

3B

BB-RA SECTIONS & ELEVATIONS

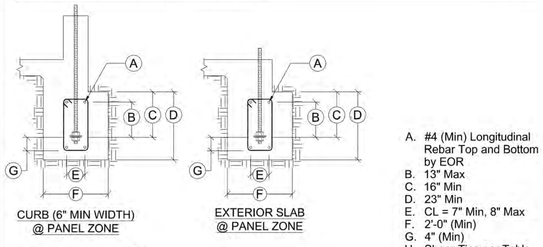

A. #4 (Min) Longitudinal Rebar Top and Bottom by EOR
B. 13" Max
C. 16" Min
D. 23" Min
E. CL = 7" Min, 8" Max
F. 2'-0" (Min)
G. 4" (Min)
H. Shear Ties per Table
I. C_{a1} per Table
J. 1-1/4" clear spacing from top of concrete at first shear tie
K. 1" c.c. Max

2B

RA SECTIONS & ELEVATIONS

A. 3 ea. #5 min. longitudinal rebar @ both faces of the wall (6 total) by EOR
B. Face of concrete
C. #4 straight rebar
D. Quantity & spacing per Detail 2A
E. 28" Min.
F. l_e = 29-1/2" Min.
G. Rebar to extend 24" min. below end of the anchorage & lap w/ continuous wall reinforcement specified by EOR
H. CL = 0.6 x wall width Max.
I. Wall width by EOR to provide min. concrete coverage per ACI requirements
J. 1-1/2" clear spacing from top of concrete at first longitudinal rebar
K. 2" CL spacing between top 3 longitudinal rebar
L. 6" max. CL spacing for horizontal rebar within anchorage embedment depth
M. Longitudinal rebar to be developed beyond last rebar by EOR
N. Vertical rebar by EOR

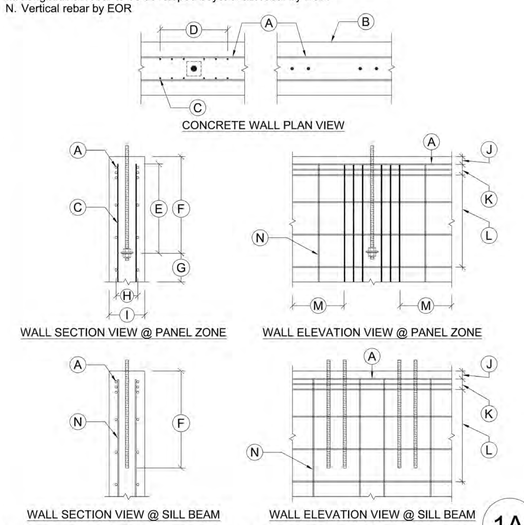

1A

RA TERMINATION WITHIN CONCRETE WALL

A. 5 ea. #5 min. longitudinal rebar @ both faces of the wall (10 total) by EOR
B. Face of concrete
C. #4 straight rebar
D. Quantity & spacing per Detail 3A
E. 32" Min.
F. l_e = 33-1/2" Min.
G. Rebar to extend 24" min. below end of the anchorage & lap w/ continuous wall reinforcement specified by EOR
H. CL = 0.6 x wall width Max.
I. Wall width by EOR to provide min. concrete coverage per ACI requirements
J. 1-1/2" clear spacing from top of concrete at first longitudinal rebar
K. 2" CL spacing between top 5 longitudinal rebar
L. 6" max. CL spacing for horizontal rebar within anchorage embedment depth
M. Longitudinal rebar to be developed beyond last rebar by EOR
N. Vertical rebar by EOR

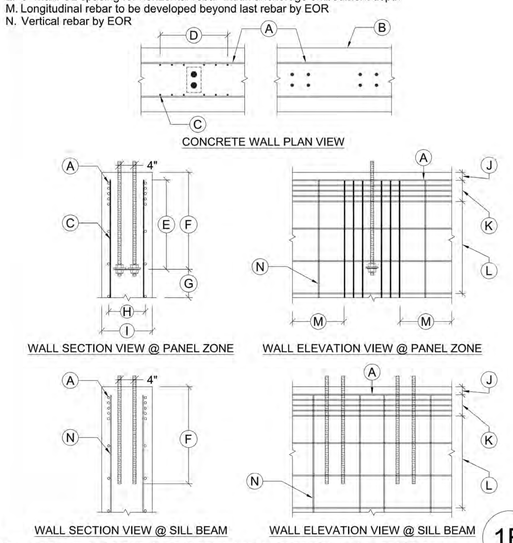

1B

BB-RA TERMINATION WITHIN CONCRETE WALL

TABLE NOTES

1. DESIGNS ARE TO RESIST LOADING PER ACI 318-14, SECTION 17.2.3.4.3.
2. HS INDICATES ANCHORS COMPLYING WITH ASTM A193 GRADE B7 WITH A 1/2" X 3" X 3"(MIN) HFPW PLATE WASHER INSTALLED WITH DOUBLE NUTS ON THE EMBED END (HFXBB NOT REQUIRED).
3. l_e = LENGTH OF EMBEDMENT FROM THE TOP OF FOOTING OR GRADE BEAM TO THE TOP OF THE HFXBB BOLT BRACE (TOP OF THE EMBEDDED HFPW PLATE WASHER @ HS ANCHORS)
4. C_{a1} = DISTANCE FROM HD CENTERLINE TO THE END OF THE FOOTING OR GRADE BEAM.
5. C_{a2} = DISTANCE FROM HD CENTERLINE TO BOTH THE FRONT AND THE BACK FACE OF THE FOOTING OR GRADE BEAM.
6. SHEAR TIES ARE GRADE 60 (MIN) REBAR AND REQUIRED PER ACI-318-14, F'C = 2,500 PSI. CURBS AND STEM WALLS MUST BE 6 INCH (MIN) WIDTH FOR RA, 12 INCH (MIN) WIDTH FOR BB-RA. IN ANY CASE, THE MINIMUM CONCRETE COVERAGE SHOULD BE PROVIDED PER ACI 318-14.
7. SHEAR TIES ARE NOT REQUIRED FOR INSTALLATION ON WOOD FRAMING, OR FOR IRC BRACED WALL PANEL APPLICATIONS.
8. STIRRUPS ARE GRADE 60 (MIN) REBAR. SEE TABLE FOR SIZE AND SPACING. SEE "STIRRUP LAYOUT" DIAGRAMS AND "KEY" FOR LAYOUT PATTERNS.
9. CONCRETE EDGE DISTANCES MUST COMPLY WITH ACI 318-14, SECTION 17.7.1

A

1. DETERMINE LOCATION AND LAYOUT OF THE MOMENT FRAME TEMPLATES PER PLANS.
2. INSTALL TEMPLATES AND ANCHORS PER PLAN DETAILS. REFER TO INSTALLATION INSTRUCTIONS AND PRODUCT LABELING FOR CORRECT TEMPLATE ORIENTATION, ANCHOR ASSEMBLIES, ANCHOR HEIGHT ABOVE CONCRETE AND SPACING BETWEEN TEMPLATES FOR FINISH FRAME WIDTH.
3. SLOTTED HOLES ARE PROVIDED IN TEMPLATES FOR PULLING THE COLUMN CENTERLINE DIMENSIONS. PRIOR TO POURING CONCRETE, CONFIRM THE SLOT TO SLOT DIMENSION ACCURATELY CORRESPONDS TO THE COLUMN CENTERLINE DIMENSION FOR THE MOMENT FRAME MODEL NUMBER BEING INSTALLED OR PER PLAN CALLOUTS BY THE DESIGN PROFESSIONAL.

CONCRETE PREPARATION INSTRUCTIONS

B

IMPORTANT!

1. ANCHORAGE IS DESIGNED FOR SINGLE STORY APPLICATIONS ONLY.
2. ANCHORAGE IS DESIGNED FOR TENSION AND SHEAR TRANSFER ONLY, FOUNDATION DESIGN PER EOR.
3. REINFORCEMENT SHOWN IS THE MINIMUM REQUIREMENT AND IS NOT INTENDED TO REPLACE REINFORCEMENT DESIGNED BY THE EOR.
4. FOR RA AND BB-RA INSTALLATIONS, THE HFXBB BOLT BRACE MAY BE PLACED ON TOP OF THE STIRRUPS WITH DOUBLE-NUTS INSTALLED AT EMBED END OF STANDARD GRADE ANCHOR RODS. (NOTE: ½" x 3" x 3" MIN. HFPW PLATE WASHERS ARE REQUIRED TO BE DOUBLE-NUTTED AT EMBED END OF HIGH STRENGTH ANCHOR RODS.)
5. HIGH STRENGTH ALL-THREAD RODS PROVIDED BY MITEK ARE STAMPED ON BOTH ENDS.

HF B7

IMPORTANT NOTES

C

REVISIONS	DATE

HARDY FRAME HFX PICTURE FRAME
PICTURE CONFIGURATION INSTALLATION DETAILS

ENGINEER OF RECORD IS RESPONSIBLE FOR DESIGN TO ACCOMODATE ACTUAL PROJECT CONDITIONS

MiTek USA, Inc.
555 S. Promenade Ave., Suite 104, Corona, CA 92879 (805) 477-0793
www.hardyframe.com

DATE:
08-01-2019

HFXPIC
1B

PYATOK
1611 TELEGRAPH AVE.
SUITE 200
OAKLAND, CA 94612
T. 510.465.7010 | F. 510.465.8575
www.pyatok.com

element structural engineers, inc.
39675 Cedar Blvd., Suite 295C
Newark, California 94560
Tel: 510.573.1557
eFax: 973.924.0663
www.elementse.com

Owner

2700 INTERNATIONAL
OAKLAND, CA 94601

STAMP:

SIGNED DATE: 12/09/2022

ISSUE SCHEDULE

NO.	ISSUE	DATE
	100% SD	5/11/2022
	50% DD	7/15/2022
	100% DD	9/16/2022
	50% CD	11/18/2022
	PERMIT SET	12/09/2022

REVISION SCHEDULE

NO.	ISSUE	DATE

JOB NUMBER:	ESE# 3395
DRAWN BY:	YL/BDT
CHECKED BY:	JTE
ISSUE DATE:	12/09/2022
SCALE:	1" = 1'-0"

TITLE:
CFS HARDY PICTURE FRAME DETAILS

SHEET:
S8.08

PRELIMINARY - Not for Construction -

© 2019 PYATOK ARCHITECTURE & URBAN DESIGN

12/7/2022 5:08:39 PM

1. AT LOCATIONS OF PICTURE FRAME INSTALLATIONS FRAME WITH A 4x (MINIMUM) RIM, 4x BLOCKING AT CANTILEVER CONDITIONS. SHEET THE FLOOR THEN LAYOUT THE 2x SILL PLATE FOR WALL FRAMING.
2. DETERMING THE LOCATION OF PICTURE FRAME AND USE TEMPLATES BY MANUFACTURER TO PULL COLUMN CENTERLINE DIMENSIONS WHILE CHECKING FOR END AND EDGE DISTANCES. SLOTTED HOLES ARE PROVIDED IN TEMPLATES FOR PULLING THE COLUMN CENTERLINE DIMENSION. MARK FOR DRILLING THE CONTINUOUS TIE-DOWN SYSTEM ROD.
3. PRIOR TO DRILLING CONFIRM THAT THE SLOT TO SLOT DIMENSION ACCURATELY CORRESPONDS TO THE COLUMN CENTERLINE DIMENSION FOR THE PICTURE FRAME MODEL NUMBER BEING INSTALLED OR PER PLAN CALLOUTS BY THE DESIGN PROFESSIONAL.
4. DRILL THROUGH THE SILL PLATE, FLOOR SYSTEM AND TOP PLATES OF WALL BELOW. INSTALL THE CONTINUOUS ALL-THREAD ROD (PER PLANS) TO A COUPLER NUT IN WALL FRAMING BELOW. WITH TOP OF ROD EXTENDING 7-1/2 INCHES ABOVE TOP OF FLOOR SHEETING INSTALL THE 2x SILL PLATE.

FLOOR SYSTEM PREPARATION INSTRUCTIONS

3

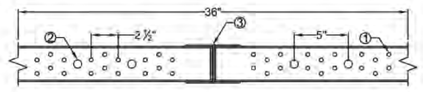

W/ HEADER BEAM SPLICE

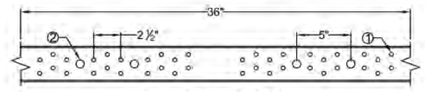

W/O HEADER BEAM SPLICE

1. 5/16" HOLES FOR WS SCREWS (QTY PER TABLE)
2. 3/4" HOLES FOR 5/8" HS CAST IN PLACE ANCHORS.
3. SPLICE AT MID-SPAN REQUIRED WHEN OUT-TO-OUT IS >13 FT.

SCREW HOLE PATTERN

2

1. 4x RIM (MIN)
2. a) 1/4" x 4-1/2" (MIN) WS SCREWS (QTY PER TABLE 2)
   b) 1/4" x 3" (MIN) WS SCREWS (QTY PER TABLE 2)
   c) 1/4" x 3" (MIN) WS SCREWS FOR OUT-OF-PLANE BRACING
3. Z4 CONTINUOUS TIE DOWN SYSTEM.
4. CINCH NUT (CNX), LOCATED AT TOP PANEL ZONE WHEN PANEL RUN ENDS (AS OCCURS).
5. GRADE 8 MACHINE BOLT WITH HEAD AND HARDENED ROUND WASHER IN PANEL ZONE. DTI WASHER AND GRADE 8 NUT IN COLUMN. **IMPORTANT**: SILICONE POCKETS TO BE IN CONTACT WITH TOP OF COLUMN!

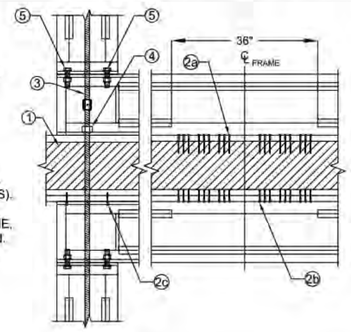

CFS HEADER BEAM TO COLUMNS ASSEMBLY INSTRUCTIONS

1. LAYOUT THE HEADER BEAM AND COLUMNS WITH OPEN (CAVITY) FACE UP.
2. CHECK THAT ACCESS AT MID-SPAN OF HEADER BEAM FOR SHEAR TRANSFER SCREWS TO WOOD FRAMING IS ORIENTED CORRECTLY.
3. ORIENT THE BOLTS THROUGH THE HEADER BEAM WITH THE HEAD AND DIRECT TENSION INDICATOR (DTI) WASHER IN THE COLUMN, HARDENED ROUND WASHER AND GRADE 8 NUT IN THE PANEL ZONE.
4. SNUG NUTS AT ALL BOLTS, THEN TIGHTEN UNTIL THE MAJORITY OF ORANGE SILICONE POCKETS BURST INDICATING REQUIRED TENSIONIS MET.
5. WHEN BOLT CONNECTIONS ARE NOTED SNUG-TIGHT, HARDENED ROUND WASHERS CAN SUBSTITUTE FOR DTI WASHERS.

MULTISTORY INSTALLATION

4

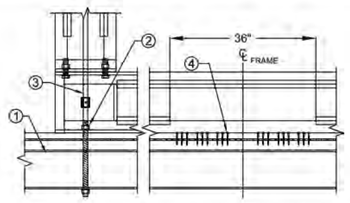

1. STEEL BEAM WITH STRUCTURAL NAILER PER PLANS.
2. NUTS AND WASHERS PER TABLE 2 NOTE 1.
3. Z4 CONTINUOUS TIE DOWN SYSTEM WHEN OCCURS.
4. 1/4" x 4-1/2" (MIN) WS SCREWS (QTY PER TABLE 2)

STEEL BEAM THRU-BOLT

6

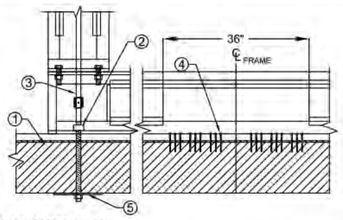

1. WOOD BEAM PER PLAN
2. CINCH (NUT) CNX
3. Z4 CONTINUOUS TIE DOWN SYSTEM WHEN OCCURS.
4. 1/4" x 4-1/2" (MIN) WS SCREWS (QTY PER TABLE 2)
5. BEARING PLATE WASHER AT UNDERSIDE OF BEAM SIZED PER BUILDING DESIGN PROFESSIONAL TO LIMIT CRUSHING FROM ANCHOR TENSION.

WOOD BEAM THRU-BOLT

5

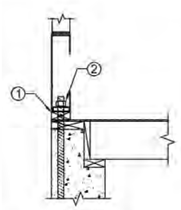

1. INSTALL FRAME ON 2x PLATE OVER SHEATHING.
2. NUTS AND WASHERS PER TABLE NOTE 1.

RAISED STEM WALL

9

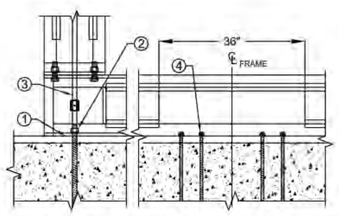

1. 15# FELT OR EQUIVALENT MOISTURE BARRIER RECOMMENDED BETWEEN FRAME AND TREATED PLATE.
2. NUTS AND WASHERS PER TABLE 2 NOTE 1.
3. Z4 CONTINUOUS TIE DOWN SYSTEM WHEN OCCURS.
4. CAST IN PLACE ANCHORS.

INSTALLATION ON 2x SILL PLATE

8

TABLE 2: MEMBER DIMENSIONS, GEOMETRY & CONNECTORS

MODEL NUMBER	MEMBER DIMENSIONS			FRAME GEOMETRY						CONNECTORS			
	COLUMN WIDTH, W_{COL}	BEAM DEPTH, D_{BEAM}	COLUMN DEPTH, D_{COL}	H_{MF} (max)	H_O (max)	W_{IN} (min)	W_{IN} (max)	W_{CL} (max)	W_{OUT} (max)	HOLD DOWN QTY, DIA, & GRADE[1]	SCREW QTY[2] (MIN)	SCREW QTY AVAILABLE AT EDGES[3] (MIN)	JOINT BOLT QTY, DIA, AND GRADE
HFXPIC1212	12"	12"	3 ½"	9'-8 ¼"	8'-9 ⅜"	7'-0"	17'-0"	20'-0"	19'-0"	4 EA 1 ⅛" HS	20	4	4 EA 1 ⅛" HS
HFXPIC1512	15"				8'-9 ⅜"	6'-9"	16'-9"		19'-3"		24		
HFXPIC1515	15"	15"			8'-6 ¾"	6'-9"	16'-9"		19'-3"		30		
HFXPIC1812	18"	12"			8'-9 ¾"	6'-6"	16'-6"		19'-6"		28		
HFXPIC1815	18"	15"			8'-6 ¾"	6'-6"	16'-6"		19'-6"		34		
HFXPIC2115	21"				8'-6 ¾"	6'-3"	16'-3"		19'-9"		36		

TABLE NOTES:

1. HOLD DOWN ANCHOR BOLTS CONNECT TO THE COLUMN BASE WITH HARDENED ROUND WASHERS BELOW GRADE 8 NUTS. ALTERNATE WASHERS ARE (2 EA) ROUND-FLAT OR (2 EA) SAE WASHERS ON EACH BOLT. ALTERNATE NUTS ARE 2H HEAVY HEX.
2. 1/4" DIAMETER MITEK PRO-SERIES SCREWS ARE 3" (MINIMUM) WHEN CONNECTING DIRECTLY TO THE COLLECTOR ABOVE.
3. ADJACENT FRAMING WITH 1/4" DIAMETER SCREWS IS REQUIRED AT THE COLUMN EDGES WHEN INSTALLING A FILLER ABOVE THE BEAM THAT IS GREATER THAN 1-1/2" OR WHEN SPECIFIED BY THE DESIGN PROFESSIONAL.

CFS PICTURE FRAME INSTALLATION INSTRUCTIONS

1. CONSIDER ACCESS TO MAKE SCREW CONNECTIONS INTO FRAMING MEMBERS ABOVE AND BELOW, THE NEED FOR ELECTRIC FIXTURES, WOOD BACKING OR BATT INSULATION THEN STAND THE ASSEMBLED FRAME WITH THE OPEN (CAVITY) FACE ORIENTED IN THE DIRECTION THAT ACCOMMODATES CONNECTIONS AND CONSIDERS THE OTHER TRADES.
2. LIFT AND INSTALL THE FRAME OVER CONTINUOUS TIE-DOWN RODS AND SET DIRECTLY ON 2x SILL PLATE.
3. INSTALL A Z4 CINCH NUT (CNX) PER PLANS PUSHING DOWN THE ROD UNTIL IT SEATS TO THE INSIDE FLANGE OF THE PANEL ZONE. INSTALL SCREWS THROUGH THE CNX FLANGES INTO THE HOLES PROVIDED IN THE PANEL ZONE FLANGE. INSTALL A COUPLER NUT THAT WILL RECEIVE THE TIE-DOWN ROD FROM ABOVE.
4. BRACE THE FRAME IN THE OUT OF PLANE DIRECTION AND CHECK FOR PLUMB.
5. MAKE TOP AND BOTTOM CONNECTIONS TO FRAMING MEMBERS ABOVE AND BELOW WITH MITEK PRO-SERIES SCREWS PER PLANS.

MEMBER DIMENSIONS, GEOMETRY & CONNECTORS

1

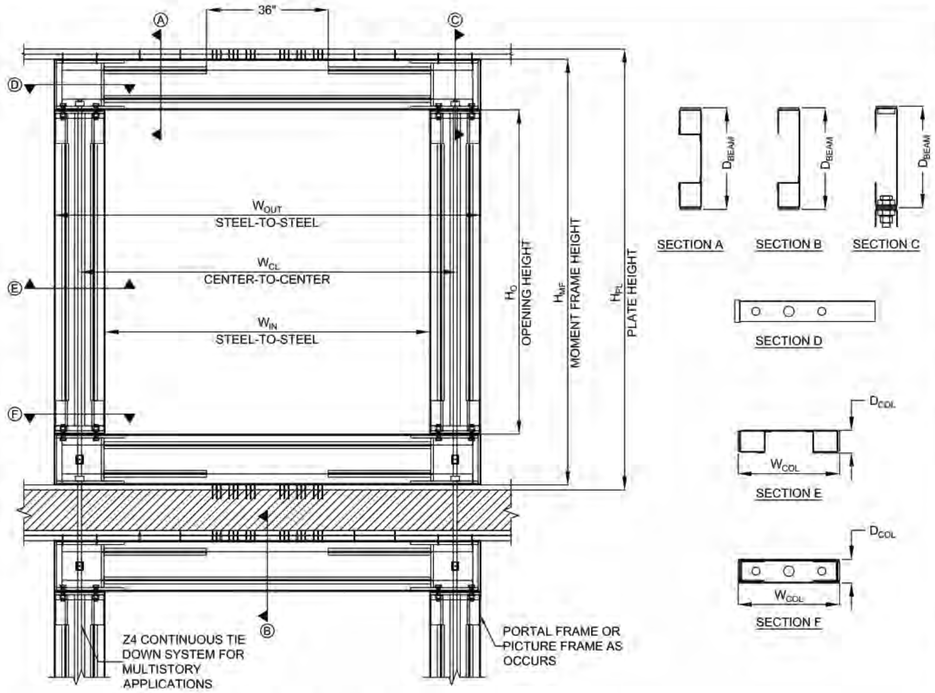

CFS PICTURE FRAME NOMENCLATURE

HFX PIC 18 12 - 8 x 8

- NOMINAL WALL HEIGHT (FT)
- NOMINAL CENTER TO CENTER SPAN (FT)
- BEAM DEPTH (IN)
- COLUMN WIDTH (IN)
- HARDY FRAME CFS PICTURE FRAME

7

REVISIONS	DATE

HARDY FRAME HFX PICTURE FRAME
PICTURE CONFIGURATION INSTALLATION DETAILS

ENGINEER OF RECORD IS RESPONSIBLE FOR DESIGN TO ACCOMODATE ACTUAL PROJECT CONDITIONS

MiTek USA, Inc.
555 S. Promenade Ave., Suite 104, Corona, CA 92879 (805) 477-0793
www.hardyframe.com

DATE: 08-01-2019

HFXPIC 2B

PYATOK
1611 TELEGRAPH AVE.
SUITE 200
OAKLAND, CA 94612
T. 510.465.7010 | F. 510.465.8575
www.pyatok.com

element structural engineers, inc.
39675 Cedar Blvd., Suite 295C
Newark, California 94560
Tel: 510.573.1557
eFax: 973.924.0663
www.elementse.com

Owner

2700 INTERNATIONAL
OAKLAND, CA 94601

STAMP:

SIGNED DATE: 12/09/2022

ISSUE SCHEDULE

NO.	ISSUE	DATE
	100% SD	5/11/2022
	50% DD	7/15/2022
	100% DD	9/16/2022
	50% CD	11/18/2022
	PERMIT SET	12/09/2022

REVISION SCHEDULE

NO.	ISSUE	DATE

JOB NUMBER:	ESE# 3395
DRAWN BY:	YL/BDT
CHECKED BY:	JTE
ISSUE DATE:	12/09/2022
SCALE:	

TITLE: **CFS HARDY PICTURE FRAME DETAILS**

SHEET: **S8.09**

PRELIMINARY - Not for Construction -

© 2019 PYATOK ARCHITECTURE & URBAN DESIGN

12/7/2022 5:08:43 PM

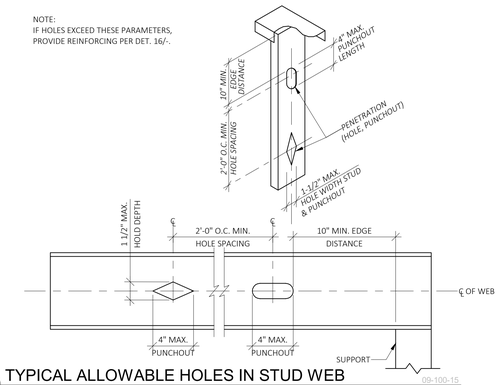

13 TYPICAL ALLOWABLE HOLES IN STUD WEB 09-100-15
N.T.S.

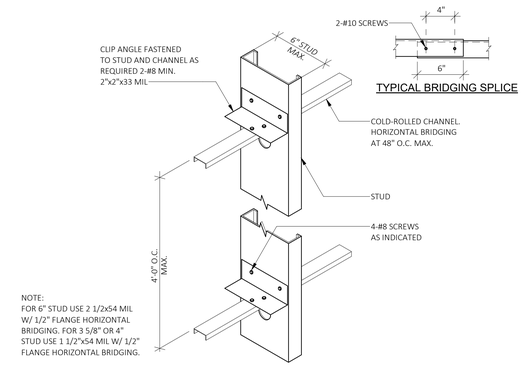

5 TYPICAL BRIDGING 09-100-05
N.T.S.

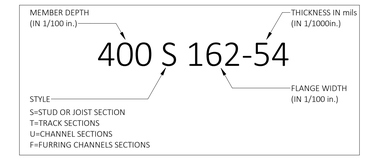

MINIMUM DELIVERABLE THICKNESS (MILS)	GAUGE	DESIGN THICKNESS (INCHES)
18	25	.0188
27	22	.0283
33	20	.0346
43	18	.0451
54	16	.0566
68	14	.0713
97	12	.1017

1 TYPICAL LIGHT GAUGE STUD DESIGNATIONS 09-100-01

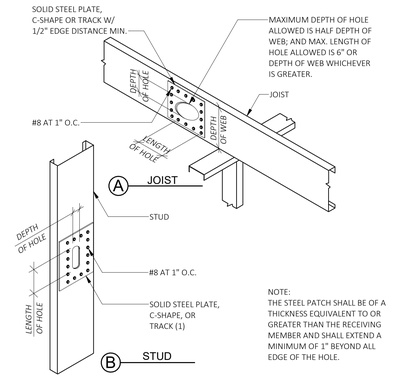

14 TYPICAL JOIST AND STUD WEB HOLES REINFORCING 09-100-16
N.T.S.

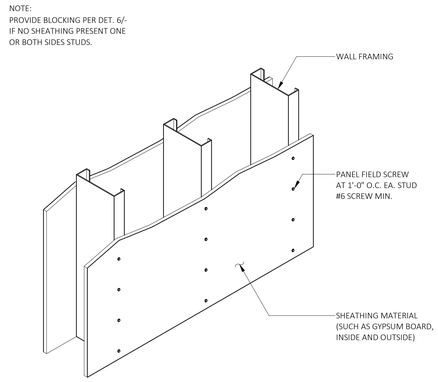

10 TYPICAL STUD BRACING WITH SHEATHING 09-100-10
N.T.S.

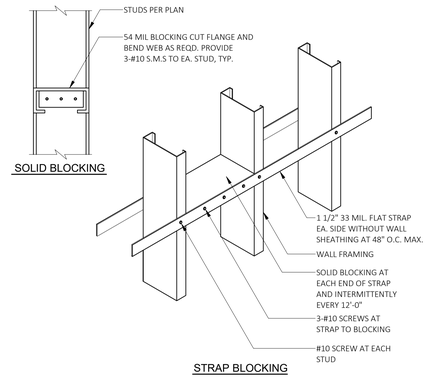

6 TYPICAL STUD BLOCKING 09-100-06
N.T.S.

EXTERIOR WALL STUD - NON BEARING PARTITION

WALL HEIGHT	STUD SECTION	SPACING
≤ 14'	600S162-43	1'-4" O.C.
16'-20'	800S162-43	1'-4" O.C.

INTERIOR WALL STUD - NON BEARING PATTITION

WALL HEIGHT	STUD SECTION	SPACING
≤ 14'	362S162-43	1'-4" O.C.

2 STUD SCHEDULE - NON-BEARING

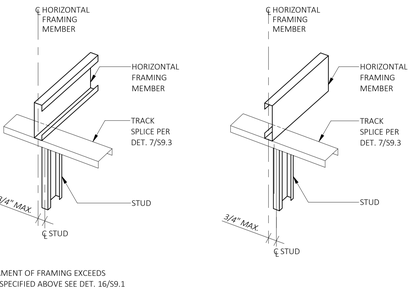

15 TOLERANCE FOR JOIST, RAFTER, TRUSS AND STUD: IN-LINE FRAMING ALIGNMENT 09-100-18
N.T.S.

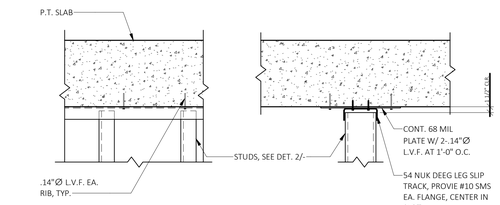

11 TYPICAL NON-BEARING WALL TOP CONNECTION
N.T.S.

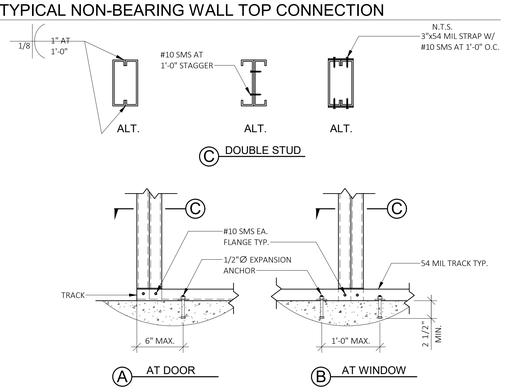

12 TYPICAL DOUBLE STUD JAMB BASE SIMILAR AT TOP 09-100-12
N.T.S.

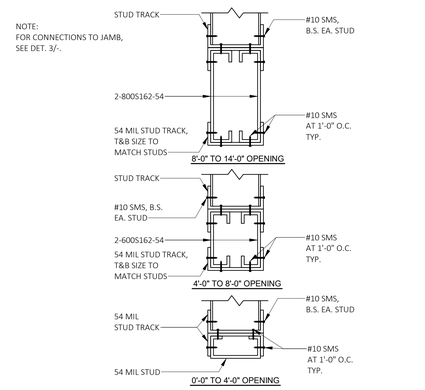

7 TYPICAL HEADER SCHEDULE 09-100-07
N.T.S.

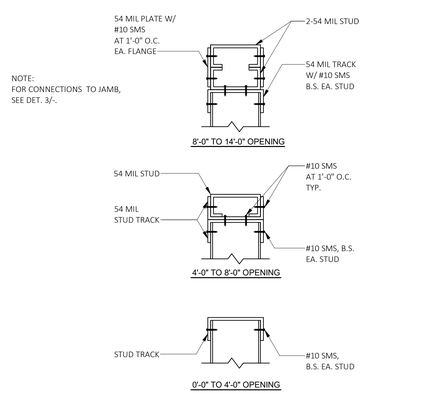

8 TYPICAL SILL SCHEDULE 09-100-08
N.T.S.

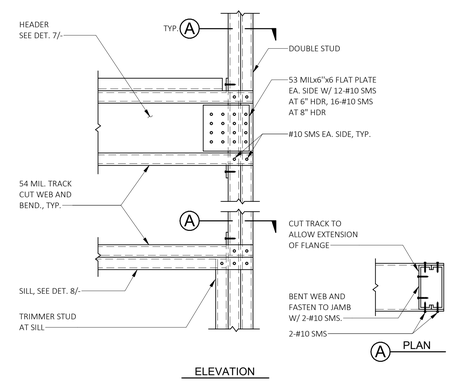

3 TYPICAL HEAD AND SILL DETAILS AT JAMB NON-BEARING WALL 09-100-03
1/2" = 1'-0"

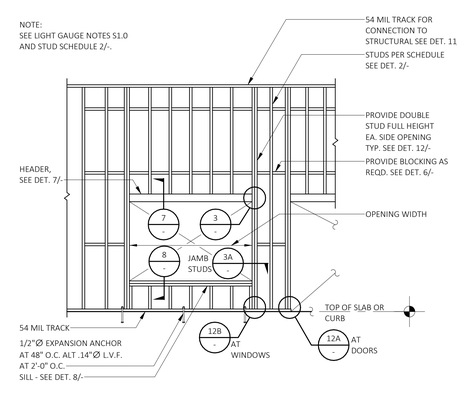

4 TYPICAL LIGHT GAUGE STUD WALL FRAMING - NON-BEARING 09-100-04
N.T.S.

PYATOK
1611 TELEGRAPH AVE.
SUITE 200
OAKLAND, CA 94612
T. 510.465.7010 | F. 510.465.8575
www.pyatok.com

element structural engineers, inc.
39675 Cedar Blvd., Suite 295C
Newark, California 94560
Tel: 510.573.1557
eFax: 973.924.0663
www.elementse.com

Owner

2700 INTERNATIONAL
OAKLAND, CA 94601

STAMP:
REGISTERED PROFESSIONAL ENGINEER TROY N. FONTELERA S 5536 STRUCTURAL STATE OF CALIFORNIA
SIGNED DATE: 12/09/2022

ISSUE SCHEDULE

NO.	ISSUE	DATE
	100% SD	5/11/2022
	50% DD	7/15/2022
	100% DD	9/16/2022
	50% CD	11/18/2022
	PERMIT SET	12/09/2022

REVISION SCHEDULE

NO.	ISSUE	DATE

JOB NUMBER:	ESE# 3395
DRAWN BY:	YL/BDT
CHECKED BY:	JTE
ISSUE DATE:	12/09/2022
SCALE:	As indicated

TITLE:
LIGHT GAUGE METAL DETAILS

SHEET:
S9.01

PRELIMINARY - Not for Construction -

© 2019 PYATOK ARCHITECTURE & URBAN DESIGN

12/7/2022 5:08:51 PM

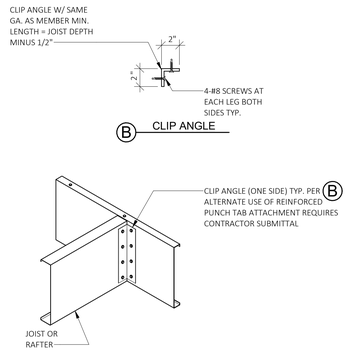

13 TYPICAL JOIST TO JOIST — 09-100-24 — N.T.S.

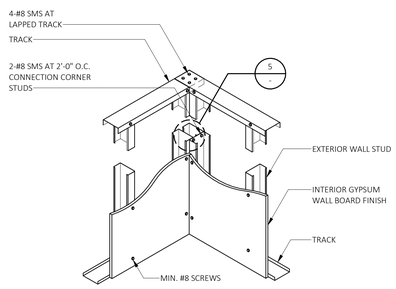

9 TYPICAL CORNER FRAMING — 09-100-20 — N.T.S.

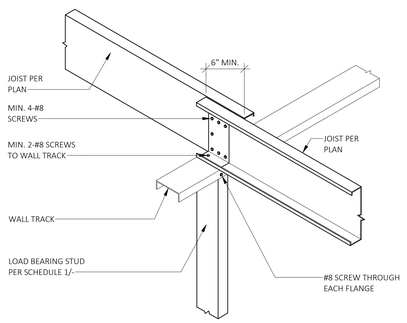

5 TYPICAL LAPPED JOIST DETAIL — 09-100-29 — 1" = 1'-0"

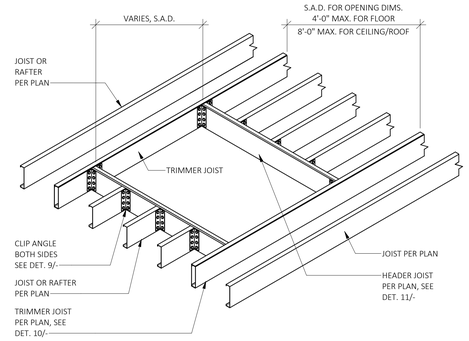

1 TYPICAL OPENING IN FRAMING — 09-100-25 — N.T.S.

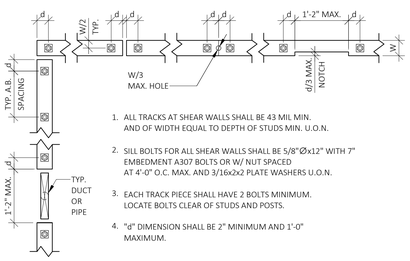

14 TYPICAL RIM TRACK SPLICE CONNECTION — 09-100-37 — N.T.S.

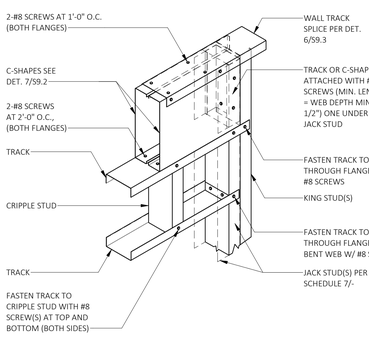

10 TYPICAL CORNER FRAMING — 09-100-21 — N.T.S.

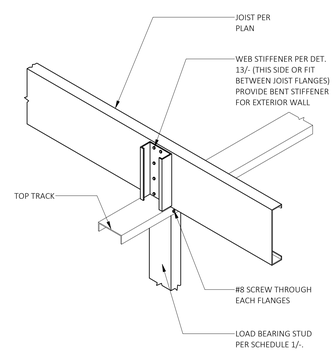

6 TYPICAL CONTINUOUS INTERIOR JOIST DETAIL — 09-100-30 — N.T.S.

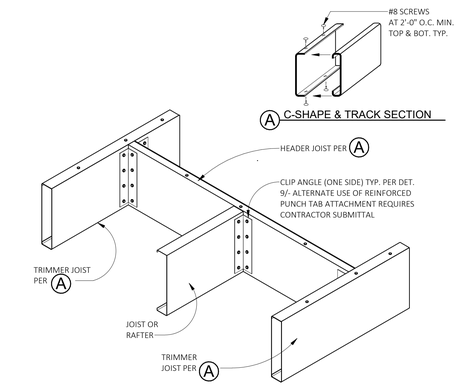

2 TYPICAL HEADING-OFF JOISTS AT OPENING — 09-100-26 — N.T.S.

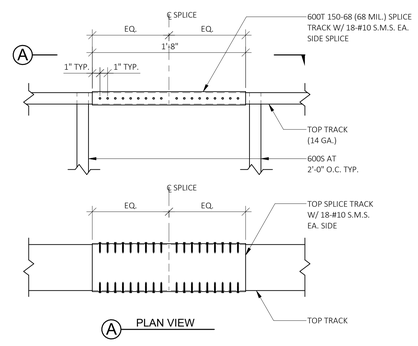

15 TYPICAL TOP TRACK SPLICE DETAIL — 09-100-38 — N.T.S.

HEADER OR BEAM SPAN	NO. OF JACK STUDS OR POST	NO. OF KING STUDS	HEADER TO KING STUD (NO. OF SCREWS REQD.)	HEADER SIZE
4'-0"	1	2	6-#8 SCREWS	400S162-43 BOX
6'-0"	1	2	6-#8 SCREWS	600S162-54 BOX
8'-0"	2	2	8-#8 SCREWS	800S162-54 BOX
12'-0"	3	3	10-#8 SCREWS	1000S162-68 BOX
16'-0"	3	4	12-#8 SCREWS	1200S162-97 BOX
18'-0"	3	4	12-#8 SCREWS	1200S162-97 BOX

NOTES:

1. SCREWS CAN BE REPLACED BY AN UP-LIFT CONNECTOR, WHICH HAS A CAPACITY OF THE NUMBER OF SCREWS MUTIPLIED BY 164 LBS.
2. ALL JACK STUDS TO BE SAME SIZE AND GRADE AS TYPICAL WALL STUD AT THAT LEVEL.
3. FASTEN STUDS TOGETHER.
4. FOR BOX BEAM SEE DET. 12/S9.2.

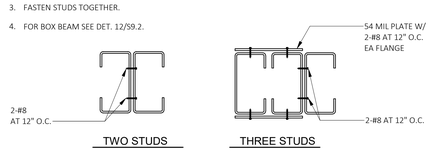

11 POST AND HEADER SCHEDULE - BEARING — 09-100-22 — N.T.S.

1. ALL TRACKS AT SHEAR WALLS SHALL BE 43 MIL MIN. AND OF WIDTH EQUAL TO DEPTH OF STUDS MIN. U.O.N.
2. SILL BOLTS FOR ALL SHEAR WALLS SHALL BE 5/8"Ø x12" WITH 7" EMBEDMENT A307 BOLTS OR W/ NUT SPACED AT 4'-0" O.C. MAX. AND 3/16x2x2 PLATE WASHERS U.O.N.
3. EACH TRACK PIECE SHALL HAVE 2 BOLTS MINIMUM. LOCATE BOLTS CLEAR OF STUDS AND POSTS.
4. "d" DIMENSION SHALL BE 2" MINIMUM AND 1'-0" MAXIMUM.

16 ANCHOR BOLT AND TRACK REQUIREMENTS — 09-100-39

09-100-23

12 TYPICAL BOX HEADER WITH JACK STUD - BEARING WALL — N.T.S.

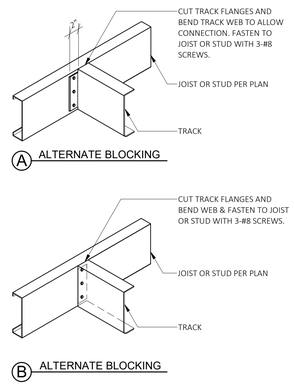

8 TYPICAL BLOCKING CONNECTION — 09-100-19 — N.T.S.

NOTES:

1. ALL SECTIONS SHOWN ARE TO BE SAME GAUGE, SEE DET. 7/S9.2 FOR SUPPORT SCHEDULE

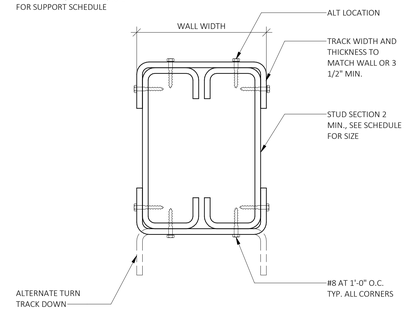

3 TYPICAL BUILT-UP POST, BOX, BEAM, OR HEADER — 09-100-27 — 1" = 1'-0"

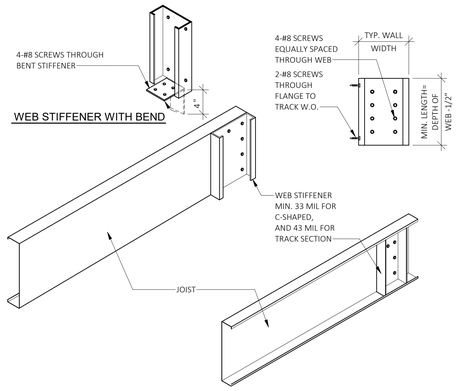

4 TYPICAL WEB STIFFENER — 09-100-28 — 1" = 1'-0"

PYATOK
1611 TELEGRAPH AVE.
SUITE 200
OAKLAND, CA 94612
T. 510.465.7010 | F. 510.465.8575
www.pyatok.com

element structural engineers, inc.
39675 Cedar Blvd., Suite 295C
Newark, California 94560
Tel: 510.573.1557
eFax: 973.924.0663
www.elementse.com

Owner

2700 INTERNATIONAL
OAKLAND, CA 94601

STAMP:

SIGNED DATE: 12/09/2022

ISSUE SCHEDULE

NO.	ISSUE	DATE
	100% SD	5/11/2022
	50% DD	7/15/2022
	100% DD	9/16/2022
	50% CD	11/18/2022
	PERMIT SET	12/09/2022

REVISION SCHEDULE

NO.	ISSUE	DATE

JOB NUMBER:	ESE# 3395
DRAWN BY:	YL/BDT
CHECKED BY:	JTE
ISSUE DATE:	12/09/2022
SCALE:	

TITLE:

LIGHT GAUGE METAL DETAILS

SHEET:

S9.02

PRELIMINARY - Not for Construction -

© 2019 PYATOK ARCHITECTURE & URBAN DESIGN

12/7/2022 5:09:01 PM

LEGEND

ACU	AIR CONDITIONING UNIT
AFF	ABOVE FINISHED FLOOR
AHJ	AUTHORITY HAVING JURISDICTION
AHU	AIR HANDLING UNIT
BDD	BACKDRAFT DAMPER
BHP	BRAKE HORSEPOWER
BTUH	BRITISH THERMAL UNIT PER HOUR
C	COMMON
CAP	CAPACITY
CC	COOLING COIL
CD	CEILING DIFFUSER
CFM	CUBIC FEET PER MINUTE
CLG	CEILING, COOLING
CO	CLEANOUT
COMB	COMBUSTION
CONT	CONTINUE, CONTROL
CONTR	CONTRACTOR
COP	COEFFICIENT OF PERFORMANCE
CWS	CHILLED WATER SUPPLY
CWR	CHILLED WATER RETURN
D	DIAMETER
DB	DRY BULB, DECIBEL
DEG	DEGREE
DIM	DIMENSION
DISCH	DISCHARGE
DN	DOWN
EA	EXHAUST AIR
EAT	ENTERING AIR TEMPERATURE
EER	ENERGY EFFICIENCY RATIO
EF	EXHAUST FAN
EFF	EFFICIENCY
EG	EXHAUST GRILLE, ENGINE GENERATOR
ELEC	ELECTRIC
EQUIV	EQUIVALENT
ESP	EXTERNAL STATIC PRESSURE
EXH	EXHAUST
EXT	EXTERIOR, EXTERNAL
F	FAHRENHEIT
FD	FIRE DAMPER
FCU	FAN COIL UNIT
FLR	FLOOR
FPM	FEET PER MINUTE
FPS	FEET PER SECOND
FSD	FIRE/SMOKE DAMPER
G	GAS
GRD	GRILLES, REGISTERS, AND DIFFUSERS
GWB	GYPSUM WALLBOARD
HORIZ	HORIZONTAL
HP	HORSEPOWER, HEAT PUMP
HRU	HEAT RECOVERY UNIT
HVAC	HEATING, VENTILATING, AND AIR CONDITIONING
HVU	HEATING AND VENTILATION UNIT
HWR	HIGH WALL RETURN, HOT WATER RETURN
HWS	HIGH WALL SUPPLY, HOT WATER SUPPLY
HX	HEAT EXCHANGER
ID	INDIRECT DRAIN, INSIDE DIAMETER
IN	INCH
KW	KILOWATT
L	LONG, LENGTH
LB	POUND
LWR	LOW WALL RETURN
LWS	LOW WALL SUPPLY
MBH	THOUSAND BTU PER HOUR
MECH	MECHANICAL
MCA	MINIMUM CIRCUIT AMPACITY
MOCP	MAXIMUM OVER CURRENT PROTECTION
MTD	MOUNTED
OSA	OUTDOOR AIR
OBD	OPPOSED BLADE DAMPER
OD	OUTSIDE DIMENSION OR DIAMETER
OPNG	OPENING
P	PUMP
PD	PRESSURE DROP
POC	POINT OF CONNECTION
PRV	PRESSURE REDUCING VALVE
PSIG	POUNDS PER SQUARE INCH GAUGE
RA	RETURN AIR
REF	REFERENCE
RF	RELIEF FAN
RG	RETURN GRILLE
RPM	REVOLUTIONS PER MINUTE
SA	SUPPLY AIR
SCH	SCHEDULE
SF	SUPPLY FAN, SQUARE FOOT
SENS	SENSIBLE
SG	SUPPLY GRILLE
SMACNA	SHEET METAL AND AIR CONDITIONING CONTRACTORS NATIONAL ASSOCIATION
SO	SCREENED OPENING
SP	STATIC PRESSURE
SS	STAINLESS STEEL, SANITARY SEWER
SQ	SQUARE
TG	TRANSFER GRILLE
TYP	TYPICAL
UH	UNIT HEATER
UON	UNLESS OTHERWISE NOTED
V	VENT
VENT	VENTILATION, VENTILATOR
VTR	VENT THRU ROOF
W	WASTE, WATT, WIDE
WB	WET BULB (TEMPERATURE)

EQUIPMENT

TYPICAL EQUIPMENT DESIGNATION (EXHAUST FAN SHOWN)

DUCT SMOKE DETECTOR

ROOM THERMOSTAT OR TEMPERATURE TRANSMITTER

ROOM HUMIDISTAT OR HUMIDITY TRANSMITTER

CARBON MONOXIDE SENSOR

SMOKE DETECTOR

TERMINALS

DIFFUSER/GRILLE TYPE, AND NUMBER OR SIZE

DESIGN CFM (WHERE APPLICABLE)

CEILING DIFFUSER (FLOW ARROWS SHOWN FOR NON SYMMETRICAL AIRFLOW)

CEILING RETURN/EXHAUST GRILLE

LINEAR DIFFUSER, CEILING OR WALL MOUNTED (FLOW ARROWS SHOWN FOR NON SYMMETRICAL AIRFLOW)

WALL SUPPLY GRILLE (SG)

WALL RETURN/EXHAUST GRILLE (RG, EG)

TRANSFER GRILLE (TG), DUCT CONNECTED, WALL MOUNTED W/ OPTIONAL CFM SHOWN

TRANSFER GRILLE, CEILING MOUNTED WITH FULL-SIZED LINED DUCT CONNECTION

GENERAL

ARCHITECTURAL BACKGROUND (THIN LINE)

NEW MECHANICAL WORK (HEAVY LINE)

MATCHLINE OR PROPERTY LINE

SECTION IDENTIFICATION (DETAIL SIMILAR)

INDICATES DIRECTION OF CUTTING PLANE

LETTER INDICATES SECTION (NO. INDICATES DETAIL)

SHEET # WHERE SECTION IS DRAWN

SHEET # WHERE SECTION IS TAKEN

DUCTWORK

DUCT (1ST FIGURE = SIDE SHOWN, 2ND FIGURE = SIDE NOT SHOWN)

DUCT SECTION, POSITIVE PRESSURE

DUCT SECTION, NEGATIVE PRESSURE

ROUND DUCT SECTION

DUCT PENETRATION THRU FLOOR OR ROOF

FIRE/SMOKE DAMPER (--◀ = HORIZ DUCT, --◆ = VERT DUCT), 2-HR RATED, UON

VOLUME DAMPER

FIRE DAMPER (--◀ = HORIZ DUCT, --◆ = VERT DUCT), 2-HR RATED, UON

90° ELBOW, R/D OR R/W=1.5

SQUARE CORNER ELBOW WITH TURNING VANES

90° TAKE-OFF OR TEE

90° CONICAL TAKE-OFF

45° LATERAL TAKE-OFF

TRANSITION OR REDUCER (FOT = FLAT ON TOP, FOB = FLAT ON BOTTOM)

WYE FITTING

90° RECTANGULAR TAKE-OFF WITH 45° TAPER

90° DIVERGING RECTANGULAR TEE, EITHER RADIUS OR TURNING VANES

FLEXIBLE DUCT

ROUND DUCT INDICATOR

GARAGE VENTILATION NOTES

1. PARKING GARAGE VENTILATION REQUIREMENTS PER CALIFORINA ENERGY CODE, SECTION 120.6 (c):

   TOTAL GARAGE AREA: 11,050 SF
   10,560 SF * 0.75 = 7,920 CFM INTERMITTENT;

   GEF-1 PROVIDED: 8,000 CFM INTERMITTENT;

2. THE TERMINATION POINT FOR PARKING GARAGE EXHAUST OUTLETS SHALL BE PER CMC 502.2.2: 10 FEET FROM OPENINGS INTO A BUILDING, 6 FEET FROM EXTERIOR WALLS OR ROOFS, 10 FEET FROM PROPERTY LINE, AND 10 FEET ABOVE ADJOINING GRADE.

3. PARKING GARAGE VENTILATION SYSTEM SHALL BE EQUIPPED WITH CARBON MONOXIDE (CO) SENSOR/CONTROLLERS THROUGHOUT THE GARAGE (1 SENSOR PER EVERY 5,000 SF). CO SENSOR/CONTROLLERS SHALL BE EQUIPPED WITH LOW SET POINT CONTACTS (SET TO 15 PPM) AND HIGH SET POINT CONTACTS (SET TO 25 PPM) PARKING GARAGE EXHAUST FANS SHALL BE EQUIPPED WITH VARIABLE FREQUENCY DRIVES. UNLESS OTHERWISE NOTED, WHEN ANY OF THE ASSOCIATED CO SENSOR/CONTROLLER SENSE THE LOW SET POINT CONDITION. THE EXHAUST FAN SHALL OPERATE AT 1/2 SPEED. IF THE CO SENSORS SENSE THE HIGH SET POINT. THE EXHAUST FAN SHALL RAMP UP TO FULL SPEED REFER TO DIAGRAM ON SHEET M4.00 DETAIL 6.

4. GARAGE MAKE-UP AIR SHALL BE PROVIDED FROM GARAGE OPENINGS AND GARAGE ENTRY.

5. GARAGE WILL BE UNDER NEGATIVE PRESSURE.

6. BEFORE OCCUPANCY PERMIT IS GRANTED FOR PARKING GARAGE SYSTEM, GARAGE EXHAUST SYSTEM NEEDS TO BE CERTIFIED USING REQUIREMENTS SPECIFIED IN NONRESIDENTIAL APPENDIX NA7.12.

7. CO SENSORS SHALL BE CERTIFIED BY THE MANUFACTURER TO BE ACCURATE WITHIN PLUS OR MINUS 5 PERCENT OF MEASUREMENTS, FACTORY CALIBRATED, CERTIFIED BY THE MANUFACTURER TO DRIFT NO MORE THAN 5 PERCENT A YEAR, CERTIFIED BY THE MANUFACTURER TO REQUIRE CALIBRATION NO MORE FREQUENTLY THAN ONCE NO MORE THAN 5 PERCENT A YEAR AND BE MONITORED BY A CONTROL SYSTEM.

8. PROVIDE SIGNS ADJACENT TO THE CO DETECTORS WARNING IF THIS ALARM IS SOUNDING TO LEAVE THE GARAGE AREA IMMEDIATELY, SIGNS AT STAIRWAYS WARNING IF THE ALARM IS SOUNDING DO NOT ENTER THE GARAGE AREA.

4/22/2022 6:28:22 PM

COPYRIGHT 2022, EMERALD CITY ENGINEERS, INC.

GENERAL NOTES

GENERAL NOTES – MECHANICAL

1. REFERENCE TO RELATED WORK: "REF" INDICATIONS DENOTE WORK COVERED ELSEWHERE (ARCHITECTURAL, STRUCTURAL, CIVIL, ELECTRICAL, LANDSCAPE, OR KITCHEN), OR ITEM BASED ON A SPECIFIC MANUFACTURER'S DIMENSIONS (VERIFY).
2. ELECTRICAL CHARACTERISTICS: REFER TO ELECTRICAL DRAWINGS FOR ELECTRICAL CHARACTERISTICS (VOLTAGES, ETC.) OF MECHANICAL EQUIPMENT, UNLESS OTHERWISE INDICATED.
3. CODES: COMPLETE INSTALLATION OF THE MECHANICAL SYSTEM SHALL BE PER THE APPLICABLE BUILDING, MECHANICAL, ENERGY, PLUMBING, FIRE, AND HEALTH CODES AND REGULATIONS AS ADOPTED BY THE LOCAL AHJ.
4. PREPARE AND SUBMIT FOR REVIEW A SHOP DRAWING BASED ON FINAL STRUCTURAL SHOP DRAWINGS FOR LOCATING AND ROUTING ALL DUCTWORK, DAMPERS, EQUIPMENT, PIPING, ETC.
   A. COORDINATE FLOOR AND BEAM PENETRATIONS WITH STRUCTURAL.
   B. COORDINATE FINAL LOCATION AND ROUTING WITH CEILING, LIGHTS, WALLS, FIRE SPRINKLER PIPING, AND OTHER TRADES WORK.
   C. INCLUDE ADDITIONAL OFFSETS, ELBOWS, ROUTING, EQUIVALENT DUCT SIZING EXCHANGE, RELOCATING, ETC. AS REQUIRED FOR A COMPLETE OPERATING MECHANICAL SYSTEM.
   D. PROVIDE SHOP DRAWINGS AT NO ADDITIONAL COST TO THE OWNER.
5. MECHANICAL CONTRACTOR SHALL LOCATE AND COORDINATE EXACT LOCATION OF ALL MECHANICAL EQUIPMENT WITHIN THE STRUCTURE.
6. ACCESS DOORS: COORDINATE WITH ARCHITECT AND LOCATE ALL ACCESS DOORS ON SHOP DRAWINGS PRIOR TO BEGINNING OF CONSTRUCTION. ACCESS DOORS IN FIRE RATED STRUCTURE SHALL BE FIRE RATED. VERIFY ACCESS DOOR LOCATIONS WITH GENERAL CONTRACTOR PRIOR TO BIDDING.
7. RATED PENETRATION: DUCT PENETRATIONS THROUGH RATED ENCLOSURES SHALL BE FIRE/SMOKE DAMPERED PER THE LATEST EDITION OF THE UNDERWRITERS LABORATORIES(UL) FIRE RESISTANCE WITH HOURLY RATINGS FOR THROUGH-PENETRATION FIRE STOPS SYSTEM VOLUME #2, OR SHALL BE INSTALLED IN STRICT ACCORDANCE WITH THE MANUFACTURER'S UL LISTINGS (3M OR EQUIVALENT). DETERMINE REQUIREMENTS WITH GENERAL CONTRACTOR PRIOR TO BID.
8. EXHAUST OUTLETS/DRYER VENTS: SOURCE-SPECIFIC FANS SHALL BE VENTED TO OUTDOORS WITH A MINIMUM 3' CLEARANCE BETWEEN VENT OUTLETS AND BUILDING OPENINGS, AND 10' MINIMUM BETWEEN VENT OUTLETS AND MECHANICAL AIR INTAKES.
9. SHAFT AND PLENUM CONNECTIONS: SEAL CONNECTIONS TO AIR SHAFTS AIRTIGHT. PROVIDE AIRTIGHT SEAL AROUND PENETRATIONS IN AIR PLENUMS.
10. LIGHT FIXTURE CLEARANCE: COORDINATE LOCATIONS OF MECHANICAL WORK TO PROVIDE CLEARANCES OVER LIGHTING FIXTURES FOR REMOVAL AND REPLACEMENT.
11. MOTORS: COMPLY WITH ENERGY CODE ENFORCED BY AHJ FOR MINIMUM EFFICIENCIES UNDER FULL LOAD.
12. ACCESS CLEARANCES FOR MAINTENANCE AND REPLACEMENT: VERIFY PHYSICAL DIMENSIONS OF EQUIPMENT TO ENSURE THAT ACCESS CLEARANCES CAN BE MET. COORDINATE LOCATIONS OF MECHANICAL WORK AND WORK OF OTHER TRADES TO PROVIDE ACCESS CLEARANCES FOR SERVICE AND MAINTENANCE.

HVAC NOTES

1. ATTACHMENTS: AIR DISTRIBUTION OUTLETS AND LOUVERS SHALL HAVE ALL REQUIRED ACCESSORIES AND ATTACHMENTS FOR A COMPLETE CONNECTION TO THE SPECIFIC TYPE OF STRUCTURE THAT THEY ARE BEING ATTACHED TO. THIS INCLUDES, BUT IS NOT LIMITED TO, EXTERIOR BRICKS, GWB WALLS, GWB CEILING, ETC.
2. FIRE RATINGS: RATED FLOOR/CEILING JOINT SPACES HAVING DUCTWORK INSIDE THEM SHALL BE FIRE/SMOKE PROTECTED TO MAINTAIN THE 1-HOUR FLOOR/CEILING RATING PER LOCAL JURISDICTIONS. EXHAUST DUCTWORK PENETRATING THE 1-HOUR ROOF/CEILING OR FLOOR/CEILING ASSEMBLY SHALL HAVE ACCESSIBLE CEILING FIRE DAMPERS. ALTERNATIVELY, THE EXHAUST DUCTWORK SHALL BE ROUTED INSIDE A RATED SHAFT TO PROTECT THE CEILING/ROOF RATING PER THE LOCAL JURISDICTIONS.
3. FIRESTOP: PIPE, DUCT, AND CONDUIT PENETRATIONS THROUGH RATED ASSEMBLIES SHALL BE FIRE AND SMOKE STOPPED PER CODE.
4. DUCTWORK: DUCTWORK SHALL BE SMOOTH SHEET METAL (CLASS-1). DUCTWORK THROUGH FIRE RATED STRUCTURE AND FLOOR SHALL BE MIN. 26 GA. STEEL. MAXIMUM LENGTH OF FLEXIBLE DUCTS SHALL BE 5'-0", UNLESS OTHERWISE NOTED ON DRAWINGS. DUCTWORK SIZES SHOWN ARE INSIDE CLEAR DIMENSIONS.
5. DUCTWORK AND PIPING OUTSIDE OF MECHANICAL ROOMS SHALL BE CONCEALED. COORDINATE WITH THE GENERAL CONTRACTOR TO FUR-OUT AS REQUIRED.
6. VOLUME DAMPERS: PROVIDE AN ACCESSIBLE MANUAL VOLUME DAMPER FOR EACH SUPPLY, RETURN, OSA, AND EXHAUST OPENING, LOCATED AS FAR UPSTREAM AS POSSIBLE FROM THE OPENING. PROVIDE A MANUAL VOLUME DAMPER FOR BRANCH MAINS SERVING MORE THAN ONE OPENING. VOLUME DAMPERS IN NON-ACCESSIBLE CEILINGS SHALL HAVE A CONTROL ARM EXTENDED TO AN ACCESSIBLE LOCATION. PROVIDE "YOUNG" REGULATOR OR EQUAL. EXACT LOCATION OF CONTROL DEVICES VISIBLE IN FINISHED SPACES SHALL BE COORDINATED WITH THE ARCHITECT. NOTE: DUCTWORK/DIFFUSERS WITHIN RESIDENTIAL UNITS SHALL BE PROVIDED WITH OBD'S IN LIEU OF BALANCING DAMPERS OUTLINED ABOVE.
7. SEISMIC: PROVIDE SEISMIC RESTRAINTS FOR MECHANICAL EQUIPMENT, PIPING, AND DUCTWORK PER SMACNA AND LOCAL REGULATIONS.
8. FILTER CLEARANCE: PROVIDE ADEQUATE CLEARANCE FOR CHANGING AIR FILTERS
9. CONTRACTOR SHALL NOT EXCEED 50 CFM PER 1000 SQUARE FEET FOR TOTAL DUCT LEAKAGE, MEASURED AT 50 PASCAL (0.2 W.C.) OF POSITIVE PRESSURE, USING CALIBRATED DUCT BLASTER TEST EQUIPMENT.

DRAWINGS ARE DIAGRAMMATIC, SHOWING THE GENERAL LOCATION, TYPE, LAYOUT, AND EQUIPMENT REQUIRED. THE DRAWINGS SHALL NOT BE SCALED FOR EXACT MEASUREMENT. REFER TO ARCHITECTURAL DRAWINGS FOR DIMENSIONS. REFER TO MANUFACTURER'S STANDARD INSTALLATION DRAWINGS FOR EQUIPMENT CONNECTIONS AND INSTALLATION REQUIREMENTS. PROVIDE DUCTWORK, CONNECTIONS, ACCESSORIES, OFFSETS, AND MATERIALS NECESSARY FOR A COMPLETE SYSTEM.

COORDINATION REQUIREMENTS

1. DUCTWORK: LOCATE AND COORDINATE THE EXACT LOCATION OF DUCTWORK WITH STRUCTURAL PLANS AND WITH THE GENERAL CONTRACTOR PRIOR TO INSTALLATION OF ANY STRUCTURE OR EQUIPMENT. COORDINATE WITH FRAMING CONTRACTOR TO ASSURE JOIST SPACES LINE UP WHEN DUCTWORK MUST PASS THROUGH DIFFERENT JOIST SPACES.
2. ADJUSTMENTS: ALL EQUIPMENT, MOTORS, FANS GAS BURNERS, IGNITION DEVICES, DRIVES, ETC. SHALL BE ADJUSTED AND BALANCED TO OPERATE AT SPECIFIED RATINGS AS REQUIRED FOR THIS PROJECT SITE AND ACCOUNTING FOR ELEVATION ABOVE SEA LEVEL.
3. APPROVALS: MECHANICAL AND PLUMBING EQUIPMENT SHALL BE APPROVED FOR INSTALLATION IN THE PROJECT LOCATION AND SHALL HAVE ALL CERTIFICATIONS AND RATINGS TO MEET ALL ENERGY, POLLUTION, ENVIRONMENTAL, SEISMIC, ETC. CODES AND REGULATIONS. THE CONTRACTOR SHALL COORDINATE WITH HIS MANUFACTURE SUPPLIERS AND SHALL INCLUDE ALL COSTS REQUIRED TO MEET THESE REQUIREMENTS IN HIS BID.

SHEET METAL NOTES

1. REFERENCE: SMACNA HVAC DUCT CONSTRUCTION STANDARDS, METAL AND FLEXIBLE, CURRENT EDITION.
2. CLEARANCE: COORDINATE DUCTWORK WITH MISCELLANEOUS OBSTRUCTIONS IN CEILING SPACE.
3. ROUND ELBOWS AND OFFSETS: FULL RADIUS (R/D = 1.5), 5-PIECE SEGMENTED OR STAMPED. REFER TO SMACNA HVACDCS FIG 2-7, 3-3. DO NOT USE ANGLED OFFSET (TYPE 1). MITERED OFFSET (TYPE 2) MAY BE USED UP TO 30 DEGREE OFFSET ANGLE.
4. ROUND TEES AND LATERALS: CONICAL TEE PER SMACNA HVACDCS FIG 3-5; DO NOT USE STRAIGHT TEE; DO NOT USE CONICAL SADDLE TAP FOR EXPOSED DUCTWORK IN FINISHED SPACES. 90-DEGREE TEE WITH OVAL TO ROUND TAP, LATERAL, AND 45-DEGREE RECTANGULAR LEAD-IN PER SMACNA HVACDCS FIG 3-4.
5. RECTANGULAR ELBOWS AND OFFSETS: FULL RADIUS WHERE SPACE PERMITS, R/W = 1.5; OTHERWISE USE SQUARE CORNER ELBOW WITH TURNING VANES.
6. RECTANGULAR DIVIDED FLOW FITTINGS: USE GENERALLY, EXCEPT BRANCHES TO TERMINALS; SMACNA HVACDCS FIG 2-5, TYPES 1, 2, 4A, AND 4B. DO NOT USE TYPE 3.
7. TURNING VANES: H.E.P. MANUFACTURER OR APPROVED HIGH EFFICIENCY PROFILE AIRFOIL TYPE FOR RECTANGULAR SQUARE THROAT ELBOWS. ACOUSTICAL TYPE FOR RETURN AIR MITERED ELBOWS.
8. TAKEOFFS TO OPENINGS: CONICAL TYPE WITH VOLUME DAMPER FOR ROUND DUCT BRANCHES PER SMACNA HVACDCS FIG 2-6, MINIMUM INLET DIAMETER 2 INCHES LARGER THAN DUCT SIZE. 45 DEGREE ENTRY FITTING FOR RECTANGULAR DUCT BRANCHES PER SMACNA HVACDCS FIG 2-6.
9. FLEXIBLE CONNECTIONS: PROVIDE AT EACH DUCT CONNECTION TO FANS, PACKAGED HVAC EQUIPMENT, EXTERNALLY ISOLATED AIR HANDLING UNITS, FAN COIL UNITS, AND SIMILAR EQUIPMENT. EXCEPTION: EQUIPMENT IN CORRIDOR CEILING SPACES WHERE FIRE RATING IS REQUIRED.

INSULATION/LINING NOTES

1. ENERGY CODE: AS A MINIMUM, COMPLY WITH THICKNESSES AND TYPES LISTED IN ENERGY CODE ENFORCED BY AHJ.
2. EXTENT OF INTERNAL DUCT LINING:
   A. GRILLE AND DIFFUSER BOXES AND BOOTS.
   B. TRANSFER DUCTS.
3. EXTENT OF EXTERNAL DUCT INSULATION:
   A. SUPPLY AND RETURN AIR IN UNCONDITIONED SPACES, MECHANICAL ROOMS, ELECTRICAL ROOMS, AND EQUIPMENT ROOMS NOT SPECIFIED TO BE INTERNALLY LINED.
   B. SUPPLY AIR ABOVE CEILINGS OR EXPOSED NOT SPECIFIED TO BE INTERNALLY LINED.
   C. OUTDOOR AIR INTAKE.
4. MISCELLANEOUS DUCT FITTINGS (CONICAL TAKEOFFS, ETC.): WRAP WITH INSULATION FOR CONDENSATION CONTROL.

PIPING NOTES

1. DISASSEMBLY PROVISIONS: PROVIDE UNIONS OR FLANGES AT PIPING CONNECTIONS TO EQUIPMENT, COILS, TRAPS, CONTROL VALVES, AND OTHER COMPONENTS TO ALLOW DISASSEMBLY FOR MAINTENANCE.
2. REDUCERS: PROVIDE AS REQUIRED FROM LINE PIPE SIZE TO EQUIPMENT, TRAP, COIL, AND CONTROL VALVE CONNECTION SIZES.
3. OFFSETS: PROVIDE FOR BRANCH LINES TO EQUIPMENT.
4. DIELECTRIC UNIONS: PROVIDE AT CONNECTIONS OF DISSIMILAR PIPE.

FIRE ALARM NOTES

FIRE ALARM CONTRACTOR SHALL PROVIDE ACTUATION DEVICE FOR COMBINATION FIRE SMOKE DAMPERS PER SECTION 717.3.3.1 OF THE BUILDING CODE:

1. WHERE A SMOKE DAMPER IS INSTALLED ABOVE SMOKE BARRIER A SPOT-TYPE DETECTOR LISTED FOR RELEASING SERVICE SHALL BE INSTALLED ON EITHER SIDE OF THE SMOKE BARRIER DOOR OPENING.
2. WHERE A COMBINATION FIRE SMOKE DAMPER IS INSTALLED WITHIN AN AIR TRANSFER OPENING IN A WALL, A SPOT-TYPE DETECTOR LISTED FOR RELEASING SERVICE SHALL BE INSTALLED WITHIN 5 FEET (1524 MM) HORIZONTALLY OF THE DAMPER.
3. WHERE A COMBINATION FIRE SMOKE DAMPER IS INSTALLED IN A CORRIDOR WALL OR CEILING, THE DAMPER SHALL BE PERMITTED TO BE CONTROLLED BY A SMOKE DETECTION SYSTEM INSTALLED IN THE CORRIDOR.
4. WHERE A TOTAL-COVERAGE SMOKE DETECTOR SYSTEM IS PROVIDED WITHIN AREAS SERVED BY A HEATING, VENTILATION AND AIR-CONDITIONING (HVAC) SYSTEM, COMBINATION FIRE SMOKE DAMPERS SHALL BE PERMITTED TO BE CONTROLLED BY THE SMOKE DETECTION SYSTEM.
5. UNLESS SPECIFICALLY SHOWN ON THE MECHANICAL PLANS, DUCT SMOKE DETECTORS SHALL NOT BE THE METHOD FOR ACTUATION OF FIRE SMOKE DAMPERS.

PRE-CON MEETING

CONTRACTORS SHALL ATTEND A PRE-CONSTRUCTION MEETING WITH THE ENGINEER FOR THE PURPOSE OF REVIEWING THE WORK PRIOR TO TO ORDERING ANY EQUIPMENT OR PERFORMING ANY WORK. THE MEETING SHALL BE LOCATED AT THE PROJECT SITE ON A DATE AND TIME TO BE MUTUALLY AGREED. THE MEETING WILL BE A WORKING SESSION. THE MEETING WILL BE FACILITATED BY THE ENGINEER AND THE AGENDA WILL INCLUDE A DETAILED REVIEW OF THE PLANS AND SPECIFICATIONS, CROSS CHECK WITH OTHER TRADES FOR COORDINATION ISSUES, REVIEW OF PROPOSED PRODUCTS, REVIEW OF PLANNED MEANS AND METHODS, AND ON-SITE INVESTIGATION OF FIELD CONDITIONS RELATIVE TO EXISTING CONDITIONS THAT COULD AFFECT THE WORK. PERSONS ATTENDING THE MEETING SHALL BE KNOWLEDGEABLE OF THE PROJECT AND SHALL BE THE THE PROJECT AND SHALL BE THE SPECIFIC PERSONS INTENDED TO CONTINUE WITH THE PROJECT THROUGH TO COMPLETION. IF REQUIRED, REVISED PLANS WILL BE ISSUED THROUGH OFFICIAL CHANNELS. CHANGES IN THE BID PRICE WILL BE DISCUSSED, BUT NO CHANGE ORDERS WILL BE ISSUED UNLESS PROCESSED THOUGH OFFICIAL CHANNELS. IT SHALL BE UNDERSTOOD THAT THE ENGINEER HAS NO AUTHORITY TO ISSUE CHANGE ORDERS. THE FOLLOWING TRADES SHALL BE REPRESENTED FOR THE MINIMUM TIME INDICATED:

MECHANICAL SHEET METAL	2 HOURS
PLUMBING/PIPING	2 HOURS
ELECTRICAL	2 HOURS
GERERAL CONTRACTOR	ALL SESSIONS

APPLICABLE CODES

THESE DRAWINGS ARE BASED ON THE FOLLOWING CODES:

-2019 CALIFORNIA BUILDING CODE

-2019 CALIFORNIA MECHANICAL CODE

-2019 CALIFORNIA PLUMBING CODE

-2019 CALIFORNIA NON-RESIDENTIAL TITLE 24 ENERGY CODE

VIBRATION AND ACOUSTICAL ISOLATION

THE FOLLOWING MEASURES SHALL BE TAKEN TO MINIMIZE VIBRATION AND NOISE TRANSMISSION FROM HVAC EQUIPMENT TO THE INTERIOR SPACES:

NOTE: IN ADDITION TO THE MEASURES LISTED BELOW, CONTRACTOR SHALL REVIEW ACOUSTICAL REPORT AND PROVIDE ALL REQUIRED EQUIPMENT LISTED IN REPORT FOR ALL HVAC EQUIPMENT AND PIPING. ACOUSTICAL REQUIREMENTS LISTED IN REPORT SHALL SUPERSEDE ANY MEASURES LISTED BELOW. NOT ALL ACOUSTICAL MEASURES ARE LISTED BELOW.

ROOFTOP AIR HANDLERS:

A) MOUNT UNITS ON SPRING ISOLATORS WITH A MINIMUM 2" STATIC DEFLECTION.
B) PROVIDE FLEX CONNECTOR BETWEEN UNIT AND ANY DUCTWORK.

FAN COIL UNITS:

A) PROVIDE FLEX CONNECTOR BETWEEN UNIT AND ANY DUCTWORK.
B) SUSPEND WITH THREADED ROD AND 1" SPRING ISOLATORS.

ROOF MOUNTED EXHAUST FANS:

A) PROVIDE FLEX CONNECTOR BETWEEN FAN AND ANY DUCTWORK.
B) MOUNT ON SPRING ISOLATORS WITH A MINIMUM 1" STATIC DEFLECTION.

ROOF MOUNTED CONDENSERS:

A) MOUNT ON SPRING ISOLATORS WITH A MINIMUM 1" STATIC DEFLECTION.

GARAGE MOUNTED CONDENSERS:

A) SUSPEND WITH THREADED ROD AND 1" SPRING ISOLATORS.

GARAGE EXHAUST:

A) SUSPEND WITH THREADED ROD AND 1" SPRING ISOLATORS.

INLINE FANS:

A) PROVIDE FLEX CONNECTOR BETWEEN UNIT AND ANY DUCTWORK.
B) SUSPEND FANS WITH THREADED ROD AND 1" SPRING ISOLATORS.

DRAWING INDEX

DWG	DESCRIPTION	INCLUDED IN SET: 100% SD SET 05/10/2022	50% DD SET 07/08/2022	100% DD SET 09/16/2022	50% CD SET 11/11/2022	PERMIT SET 12/09/2022						
M0.00	LEGEND, GENERAL NOTES, AND SHEET INDEX	X	X	X	X	X						
M0.01	SCHEDULES		X	X	X	X						
M0.02	NOTES				X	X						
M2.01	BUILDING PLANS – LEVEL 1	X	X	X	X	X						
M2.02	BUILDING PLANS – LEVEL 2	X	X	X	X	X						
M2.03	BUILDING PLANS – LEVEL 3	X	X	X	X	X						
M2.04	BUILDING PLANS – LEVEL 4	X	X	X	X	X						
M2.05	BUILDING PLANS – LEVEL 5	X	X	X	X	X						
M2.06	BUILDING PLANS – LEVEL 6	X	X	X	X	X						
M2.07	BUILDING PLANS – ROOF	X	X	X	X	X						
M3.00	ENLARGED UNIT PLANS	X	X	X	X	X						
M3.01	ENLARGED UNIT PLANS	X	X	X	X	X						
M3.02	ENLARGED UNIT PLANS	X	X	X	X	X						
M4.00	DETAILS & DIAGRAMS		X	X	X	X						
M4.01	DETAILS & DIAGRAMS		X	X	X	X						
M4.02	DETAILS & DIAGRAMS		X	X	X	X						

PYATOK
1611 TELEGRAPH AVE.
SUITE 200
OAKLAND, CA 94612
T. 510.465.7010 | F. 510.465.8575
www.pyatok.com

THE UNITY COUNCIL
1900 FRUITVALE AVE
#2A
OAKLAND, CA 94601

EMERALD CITY ENGINEERS, INC
21705 Highway 99 Lynnwood, WA 98036 425-741-1200 tel / 1201 fax

2700 INTERNATIONAL
OAKLAND, CA 94601

STAMP:
REGISTERED PROFESSIONAL ENGINEER MASSAMAGHAN KONE No. M38848 EXP. 03-31-24 MECHANICAL STATE OF CALIFORNIA
12/09/22

ISSUE SCHEDULE

100 SD	5/11/22
50 DD	7/15/22
100 DD	9/16/22
PRICING SET	11/11/22
PERMIT SET	12/09/22

REVISION SCHEDULE

NO.	ISSUE	DATE

JOB NUMBER:	2049-008
DRAWN BY:	TJP
CHECKED BY:	MK
ISSUE DATE:	12/09/2022
SCALE:	

TITLE:

LEGEND, GENERAL NOTES, AND SHEET INDEX

SHEET:

M0.00

PRELIMINARY - Not for Construction -

© 2019 PYATOK ARCHITECTURE & URBAN DESIGN

MECHANICAL PIPE INSULATION SCHEDULE

SERVICE	MATERIAL	THICKNESS	FIELD APPLIED JACKET	VAPOR RETARDER REQUIRED	FINISH	NOTES
REFRIGERANT SECTION, LIQUID AND HOT-GAS PIPING (WHERE REQUIRED). OPERATING TEMPERATURE 40-60°F.	FLEXIBLE ELASTOMERIC	½"-1¼" PIPE: ¾" 1½" & LARGER PIPE: 1"	NONE	NO	NONE	
REFRIGERANT SECTION, LIQUID AND HOT-GAS PIPING (WHERE REQUIRED). OPERATING TEMPERATURE BELOW 40°F.	FLEXIBLE ELASTOMERIC	½"-¾" PIPE: 1" 1"& LARGER PIPE: 1½"	NONE	NO	NONE	
ABOVE GROUND INSULATION OUTSIDE THE BUILDING. OPERATING TEMPERATURE 40-60°F.	FLEXIBLE ELASTOMERIC	½"-1¼" PIPE: ¾" 1½" & LARGER PIPE: 1"	NONE	YES	TWO COATS OF MANUFACTURER'S RECOMMENDED UV INHIBITOR	
ABOVE GROUND INSULATION OUTSIDE THE BUILDING. OPERATING TEMPERATURE BELOW 40°F.	FLEXIBLE ELASTOMERIC	½"-¾" PIPE: 1" 1" & LARGER PIPE: 1½"	NONE	YES	TWO COATS OF MANUFACTURER'S RECOMMENDED UV INHIBITOR	

DUCT INSULATION SCHEDULE

SERVICE	MATERIAL	MINIMUM R-VALUE	VAPOR RETARDER REQUIRED	NOTES
SUPPLY AND OUTSIDE AIR DUCTS, CONCEALED, LOW-RISE RESIDENTIAL (I.E. 3-STORIES AND LESS)	MINERAL-FIBER BLANKET	R-4.2	YES	
SUPPLY AND OUTSIDE AIR DUCTS, CONCEALED, NON-RESIDENTIAL AND HIGH-RISE RESIDENTIAL (I.E. 4-STORIES AND MORE)	MINERAL-FIBER BLANKET	R-4.2	YES	
RETURN AIR DUCTS, CONCEALED, LOW-RISE RESIDENTIAL (I.E. 3-STORIES AND LESS)	MINERAL-FIBER BLANKET	R-4.2	YES	
RETURN AIR DUCTS, CONCEALED, NON-RESIDENTIAL AND HIGH-RISE RESIDENTIAL (I.E. 4-STORIES AND MORE)	NONE REQUIRED, UNLESS NOTED OTHERWISE	N/A	N/A	
SUPPLY, RETURN, AND OUTSIDE AIR DUCTS, FULLY EXPOSED WITHIN CONDITIONED SPACES.	NONE REQUIRED, UNLESS NOTED OTHERWISE	N/A	N/A	
SUPPLY AND RETURN AIR DUCTS LOCATED IN UNCONDTIONED SPACES OR OUTDOORS.	CLOSED-CELL PHENOLIC FOAM	R-8.0	NO	FIELD APPLIED FOIL & PAPER JACKET

NOTE: ALL DUCTWORK SHALL BE INSULATED PER THE MINIMUM REQUIREMENTS OF 2019 CALIFORNIA ENERGY CODE.

DIFFUSER SCHEDULE

CALLOUT	DESCRIPTION	AIRFLOW RANGE, CFM	FACE SIZE, IN	BASIS OF DESIGN (1)(2)(3)
CD-1	CEILING DIFFUSER	0-200	12x12	TITUS TMS
CD-2	CEILING DIFFUSER	0-500	24x24	TITUS TMS
EG-1	SIDEWALL EXHAUST GRILLE	0-500	12x12	TITUS 350RL
EG-2	CEILING EXHAUST GRILLE	0-500	12x12	TITUS 350ZRL
LD-1	SLOT DIFFUSER (SUPPLY)	0-500	48x6	TITUS ML39 4 SLOT (4)
RG-1	CEILING RETURN GRILLE	0-2000	24x24	TITUS 350ZRL
RG-2	CEILING RETURN GRILLE	0-1200	24x12	TITUS 350ZRL
RG-3	SIDEWALL RETURN GRILLE	0-1200	16x16	TITUS 350RL
SG-1	SUPPLY GRILLE	0-1200	16x16	TITUS 300RS
SG-2	SUPPLY GRILLE	0-800	14x14	TITUS 300RS

NOTES:
(1) ALL DIFFUSERS, REGISTERS, AND GRILLES SHALL BE FACTORY PRIMED FOR CUSTOM PAINTING BY OTHERS.
(2) PROVIDE SIDEWALL GRILLES WITH OBD'S FOR BALANCING.
(3) PROVIDE SPECIFIED EQUIPMENT OR EQUAL.
(4) PROVIDE 4-FOOT INSULATED PLENUM

KITCHEN RANGE HOODS:

CEC 150.0(O)1.G: RESIDENTIAL KITCHEN RANGE HOODS SHALL BE RATED FOR SOUND IN ACCORDANCE WITH SECTION 7.2 OF ASHRAE 62.2. KITCHEN HOODS SHALL BE RATED FOR SOUND AT A MAXIMUM OF 3 SONES AT ONE OR MORE AIRFLOW SETTING GREATER THAN OR EQUAL TO 100 CFM.

VENTILATION CALCULATIONS

Emerald City Engineers, Inc.
21705 Highway 99
Lynnwood, WA 98036

Project Name: 2700 International
Project Number: 2049-008
Edited By: TJP

2019 CMC Table 402.1								2019 CEnC Table 120.1-A					
Space	**Rp**	**Ra**	**People per 1000 sf**	**Floor Area (sf)**	**People**	**Ez**	**Ventilation Required (CFM)**	**CFM / Person**	**Ventilation Required (CFM)**	**CFM / SF**	**Ventilation Required (CFM)**	**Greatest Ventilation Required (CFM)**	**Ventilation Provided (CFM)**
LOBBY	5	0.06	-	1330	6	0.8	137	15	90	0.15	200	200	200
OFFICES	5	0.06	-	1690	14	0.8	214	15	210	0.15	254	254	275
COMMUNITY ROOM	7.5	0.06	-	1310	32	0.8	398	15	480	0.15	197	480	500

Emerald City Engineers, Inc.
21705 Highway 99
Lynnwood, WA 98036

Project Name: 2700 International
Project Number: 2049-008
Edited By: TJP

Per 2019 CMC 402.1: "Ventilation air requirements for occupancies regulated by the California Energy Commission are found in the California Energy Code."

Per 2019 CEnC 120.1(b)2: "All dwelling units shall meet the requirements of ASHRAE Standard 62.2".

Per 2019 CEnC 150.0(o): "All dwelling units shall meet the requirements of ASHRAE Standard 62.2".

Per ASHRAE 62.2, Total ventilation rate (cfm) = 0.03 cfm/sf x floor area + 7.5 cfm x (number of bedrooms +1)
Note: Number of bedrooms shall not be less than 1. Studio and 1-Bedroom units both have 1 bedroom.

Unit Type	Floor Area	Number of Bedrooms	Ventilation Required (CFM)	Ventilation Provided (CFM)
UNIT A1	545	1	**31**	**40**
UNIT A1.2	545	1	**31**	**40**
UNIT A2	500	1	**30**	**40**
UNIT A3	490	1	**30**	**40**
UNIT B1	755	2	**45**	**50**
UNIT B2	795	2	**46**	**50**
UNIT B3	820	2	**47**	**50**
UNIT B4	780	2	**46**	**50**
UNIT B5	855	2	**48**	**50**
UNIT C1	1020	3	**61**	**70**
UNIT C2	1005	3	**60**	**70**

4/22/2022 6:28:22 PM

COPYRIGHT 2022, EMERALD CITY ENGINEERS, INC.

FAN SCHEDULE

EQUIP NO.	SERVICE	MOUNTING/ DISCHARGE	AIRFLOW, CFM	ESP. IN WG	ELECTRICAL VOLTAGE	ELECTRICAL HP	BRAKE HORSEPOWER/WATTS	SOUND DATA	OPERATION	WEIGHT, LBS	BASIS OF DESIGN (1)
EF-1	RESIDENTIAL UNIT BATHROOM	CEILING MOUNTED	(3)	0.25	120V/1P	FHP	5.80 W	0.3 SONES	(4)	11.5	PANASONIC FV-05-11VKS2 (10)
EF-2	TRASH EXHAUST	UTILITY	875	0.50	208V/1P	1/4	0.14 HP	57 dB	CONTINUOUS	150.0	GREENHECK USF-13
EF-3	NOT USED										
EF-4	MECHANICAL ROOM	INLINE	300	0.25	120V/1P	1/8	81 W	1.3 SONES	CONTINUOUS	25	GREENHECK CSP-A390 (6)
EF-5	BIKE ROOM	INLINE	200	0.25	120V/1P	1/4	117 W	0.3 SONES	CONTINUOUS	25	GREENHECK CSP-A200 (6)
EF-6	MAINTENANCE/JANITOR CLOSET	INLINE	600	0.25	120V/1P	1/2	270 W	2.0 SONES	CONTINUOUS	50	GREENHECK CSP-A710 (6)
EF-7	RESTROOM	CEILING MOUNTED	50	0.25	120V/1P	FHP	9 W	0.3 SONES	CONTINUOUS	25	GREENHECK SP-A90 (6)(7)
EF-8	JANITOR CLOSET	CEILING MOUNTED	100	0.25	120V/1P	FHP	28 W	0.6 SONES	CONTINUOUS	25	GREENHECK SP-B150 (6)
GEF-1	GARAGE EXHAUST FAN	INLINE	8,000	0.5	208V/3P	2	1.64 HP	15.8 SONES	(2)	325	GREENHECK SQ-24 (8)(9)
SF-1	UNIT VENTILATION	UTILITY	1,810	1.0	208V/3P	3/4	0.52 HP	65 dB	(11)	200.0	GREENHECK USF-16
SF-2	UNIT VENTILATION	UTILITY	1,880	1.0	208V/3P	3/4	0.55 HP	65 dB	(11)	200.0	GREENHECK USF-16
SF-3	CORRIDOR VENTILATION	UTILITY	1,250	0.5	208V/3P	1/2	0.36 HP	63 dB	CONTINUOUS	200.0	GREENHECK USF-15 (12)
SF-4	CORRIDOR VENTILATION	UTILITY	1,250	0.5	208V/3P	1/2	0.36 HP	63 dB	CONTINUOUS	200.0	GREENHECK USF-15 (12)
SF-5	TRASH CHUTE MAKE-UP AIR	UTILITY	375	0.5	208V/1P	1/4	0.08 HP	55 dB	CONTINUOUS	1250.0	GREENHECK USF-08
SF-6	LOBBY VENTILATION AIR	INLINE	200	0.25	208V/1P	FHP	117 W	0.3 SONES	CONTINUOUS	25	GREENHECK CSP-A200 (6)
SF-7	OFFICE VENTILATION AIR	INLINE	275	0.25	208V/1P	FHP	77 W	0.3 SONES	CONTINUOUS	40	GREENHECK CSP-A710 (6)
SF-8	COMMUNITY ROOM VENTILATION AIR	INLINE	500	0.25	208V/1P	FHP	318 W	0.3 SONES	CONTINUOUS	60	GREENHECK CSP-A900 (6)

NOTES:
(1) PROVIDE BACKDRAFT DAMPERS ON EXHAUST FANS.
(2) REFER TO GARAGE VENTILATION NOTES ON SHEET M0.00.
(3) FAN SHALL SERVE AS A VENTILATION FAN FOR A BALANCED SYSTEM, AS SPECIFIED ON RESIDENTIAL UNIT OUTSIDE AIR CALCULATIONS ON SHEET M0.01.
(4) PROVIDE INTEGRATED MULTI-SPEED MODEL WITH CONDENSATION SENSOR PANASONIC FV-CSVK1 AND MOTION SENSOR PANASONIC FV-MSVK1.
(5) INTERLOCK WITH THERMOSTAT, SET TO 95F.
(6) PROVIDE SPEED CONTROLLER.
(7) MULTIPLE FANS ARE INDENTIFIED WITH A LETTER SUFFIX (EF-4A, EF-4B, ETC.). THERE MAY BE GAPS IN THE SEQUENCE. REFER TO PLANS FOR QUANTITIES.
(8) PROVIDE VFD.
(9) PROVIDE CEILING HUNG MOUNTING RAILS, INLET BELL, AND GUARDS.
(10) PROVIDE PERMANENT PLAQUE THAT READS "THIS SWITCH CONTROLS THE INDOOR AIR QUALITY VENTILATION FOR THE APARTMENT UNIT, LEAVE IT ON UNLESS THE OUTDOOR AIR QUALITY IS VERY POOR".
(11) RUN CONTINUOUSLY. PROVIDE SHUTOFF SWITCH FOR POOR AIR QUALITY DAYS.
(12) PROVIDE SPRING ISOLATOR WITH MINIMUM STATIC DEFLECTION OF 1".

THROUGH-WALL HEAT PUMP SCHEDULE

EQUIP NO.	SERVICE	SUPPLY AIRFLOW, CFM	COOLING BTUH	COOLING EER	COOLING SEER	HEATING BTUH	HEATING COP	HEATING ELEC HEATER, KW	ELECTRICAL VOLTAGE	ELECTRICAL MCA	ELECTRICAL MOCP	BASIS OF DESIGN
HPAC-1	RESIDENTIAL UNITS - LIVING AREA	235	8,100	11.9	18.0	14,240	3.54	2	208V/1P	14	20	EPHOCA DK92HDSO (1)(2)(3)(4)(5)

NOTES:
(1) PROVIDE HARD-WIRED REMOTE WALL MOUNTED THERMOSTAT.
(2) PROVIDE WITH A HARDWIRE POWER CONNECTION.
(3) PROVIDE THIRD PARTY THERMOSTAT GATEWAY (TPG) FOR CONNECTION TO HARD-WIRED REMOTE WALL THERMOSTAT.
(4) PROVIDE BUG SCREEN OF VENT OPENINGS.
(5) PROVIDE SIDEWALL ADAPTER AT UNIT TYPES WHERE APPLICABLE. SEE FLOOR PLANS.

SPLIT SYSTEM HEAT PUMP SCHEDULE - INDOOR UNIT

EQUIP NO.	SERVICE	MOUNTING/ DISCHARGE	FAN AIRFLOW, CFM	FAN ESP. IN WG	FAN MOTOR HP	FAN MIN. OSA, CFM	ELECTRICAL VOLTAGE	ELECTRICAL MCA	ELECTRICAL MOCP	AUX HEAT (KW)	BASIS OF DESIGN (1)(2)(3)	CONNECTED OUTDOOR UNIT
FCU-1	LOBBY	HORIZONTAL	1200	0.5	1/2	(4)	208V/1P	50.4	60	10	CARRIER FX4DNB037010	HP-1
FCU-2	OFFICES	HORIZONTAL	1200	0.5	1/2	(4)	208V/1P	50.4	60	10	CARRIER FX4DNB037010	HP-2
FCU-3	COMMUNITY ROOM	HORIZONTAL	1200	0.5	1/2	(4)	208V/1P	50.4	60	10	CARRIER FX4DNB037010	HP-3
FCU-4	LAUNDRY	HIGH WALL	870	-	-	-	208V/1P	0.4	(3)	-	CARRIER 40MAQB30B--3	HP-4
FCU-5	ELEC	HIGH WALL	680	-	-	-	208V/1P	0.27	(3)	-	CARRIER 40MAQB18B--3	HP-5
FCU-6	FIRE PUMP	HORIZONTAL	1200	0.1	1/2	-	208V/1P	19	20	2.3	FIRST CO. 37HXX	HP-6
FCU-7	ELEV MACHINE ROOM	HORIZONTAL	600	0.1	1/2	-	208V/1P	19	20	2.3	FIRST CO. 26HXX	HP-7

NOTES:
(1) REFRIGERANT SHALL BE R-410A.
(2) PROVIDE CONDENSATE OVERFLOW SWITCH TO SHUTDOWN FAN COIL IF THE PRIMARY CONDENSATE DRAIN IS BLOCKED, TO PREVENT DAMAGE TO THE CEILING.
(3) INDOOR UNIT POWERED BY OUTDOOR UNIT
(4) MINIMUM OUTSIDE AIR CALCULATIONS ON SHEET M0.02

SPLIT SYSTEM HEAT PUMP SCHEDULE - OUTDOOR UNIT

EQUIP NO.	SERVICE	CAPACITY, TONS	TOTAL COOLING CAPACITY, BTUH	SEER	TOTAL HEATING CAPACITY, BTUH	HSPF	ELECTRICAL VOLTAGE	ELECTRICAL MCA	ELECTRICAL MOCP	DIMENSIONS, INCHES LENGTH	DIMENSIONS, INCHES WIDTH	DIMENSIONS, INCHES HEIGHT	WEIGHT, LBS	BASIS OF DESIGN (1)(2)(3)(4)	CONNECTED FAN COIL UNIT
HP-1	LOBBY	3	35,200	15	33,600	8.2	208V/1P	22.1	35	35	35	36	215	CARRIER 25HCC536A0030	FCU-1
HP-2	OFFICES	3	35,200	15	33,600	8.2	208V/1P	22.1	35	35	35	36	215	CARRIER 25HCC536A0030	FCU-2
HP-3	COMMUNITY ROOM	3	35,200	15	33,600	8.2	208V/1P	22.1	35	35	35	36	215	CARRIER 25HCC536A0030	FCU-3
HP-4	LAUNDRY	2.5	30,000	19.8	30,000	9.4	208V/1P	20	30	38	17	32	150	CARRIER 38MAQB30R--3	FCU-4
HP-5	ELEC	1.5	17,000	20	18,000	10.3	208V/1P	18	25	34	15	28	125	CARRIER 38MAQB18R--3	FCU-5
HP-6	FIRE PUMP	3	35,200	15	33,600	8.2	208V/1P	22.1	35	35	35	36	215	CARRIER 25HCC536A0030	FCU-6
HP-7	ELEVATOR CONTROL ROOM	1 1/2	17,800	15.3	17,400	8.6	208V/1P	11.8	20	37	16	25	150	CARRIER 25HHA418	FCU-7

NOTES:
(1) AHRI LISTED WITH ALL STANDARD FEATURES, INSTALLATION ACCESSORIES AND COMPRESSOR SHORT CYCLING PROTECTION. FILTER DRIVER, REFRIGERANT LINE FILTER, LIQUID SOLENOID VALVE, AND SAFETY PRESSURE SWITCHES. INSTALL REFRIGERANT TUBING AND LENGTH IN STRICT ACCORDANCE WITH MANUFACTURER'S RECOMMENDATION.
(2) PROVIDE ALL REQUIRED ACCESSORIES FOR LOW-AMBIENT AND LONG-LINE APPLICATIONS.
(3) ROUTING OF REFRIGERANT LINES FROM INDOOR TO OUTDOOR UNITS NOT SHOWN ON PLANS. CONTRACTOR TO FIELD COORDINATE ROUTING.
(4) REFRIGERANT SHALL BE R-410A.

EXHAUST VENT CAPS

EXHAUST VENT CAPS FOR RESIDENTIAL UNIT DRYER, BATHROOM AND RANGE EXHAUST SHALL BE GALVANIZED SHEET METAL VENT CAPS PAINTED TO MATCH ADJACENT EXTERIOR SURFACE. REVERSOMATIC MODEL ECA OR EQUAL. VENT HOODS SHALL HAVE A 4" MINIMUM OPENING DEPTH FROM THE FACE OF THE WALL FOR PROPER OPERATION OF FANS. PROVIDE BACK DRAFT DAMPERS ON ALL VENT CAPS.

UNIT AND PUBLIC THERMOSTATS

FOR ALL SINGLE ZONE, AIR CONDITIONERS AND HEAT PUMPS ALL THERMOSTATS SHALL HAVE SETBACK CAPABILITIES WITH A MINIMUM OF FOUR SEPARATE SET POINTS PER 24-HOUR PERIOD. ALSO THE THERMOSTAT MUST COMPLY WITH THE OCCUPANT CONTROLLED SMART THERMOSTAT REQUIREMENTS IN 2019 CALIFORNIA ENERGY CODE SECTION 110.12(A), WHICH IS CAPABLE OF RESPONDING TO DEMAND RESPONSE SIGNALS IN THE EVENT OF GRID CONGESTION AND SHORTAGES DURING HIGH ELECTRICAL DEMAND PERIODS.

THERMOSTAT MUST BE LISTED ON CALIFORNIA'S ENERGY COMMISSION CERTIFICATION LIST OF APPROVED OCCUPANT CONTROLLED SMART THERMOSTATS.

THERMOSTATS SHALL BE FURNISHED BY MECHANICAL CONTRACTOR, INSTALLED BY ELECTRICAL CONTRACTOR, AND PROGRAMMED BY MECHANICAL CONTRACTOR.

PROVIDE LOCKABLE THERMOSTAT COVERS IN PUBLIC AREAS.

MOUNT ALL THERMOSTATS WITH TOP OF THERMOSTAT AT 48"ABOVE FINISHED FLOOR.

PYATOK
1611 TELEGRAPH AVE.
SUITE 200
OAKLAND, CA 94612
T. 510.465.7010 | F. 510.465.8575
www.pyatok.com

THE UNITY COUNCIL
1900 FRUITVALE AVE
#2A
OAKLAND, CA 94601

EMERALD CITY ENGINEERS, INC
21705 Highway 99 Lynnwood, WA 98036 425-741-1200 tel / 1201 fax

2700 INTERNATIONAL
OAKLAND, CA 94601

STAMP: REGISTERED PROFESSIONAL ENGINEER MASSAMAGHAN KONE No. M38818 EXP. 03-31-24 MECHANICAL STATE OF CALIFORNIA 12/09/22

ISSUE SCHEDULE

100 SD	5/11/22
50 DD	7/15/22
100 DD	9/16/22
PRICING SET	11/11/22
PERMIT SET	12/09/22

REVISION SCHEDULE

NO.	ISSUE	DATE

JOB NUMBER: 2049-008
DRAWN BY: TJP
CHECKED BY: MK
ISSUE DATE: 12/09/2022
SCALE:
TITLE:
SCHEDULES

SHEET:
M0.01

PRELIMINARY - Not for Construction -

© 2019 PYATOK ARCHITECTURE & URBAN DESIGN

CALGREEN NOTES

1. PER SECTION 4.504.1 & SECTION 5.504.3, COVERING OF DUCT OPENINGS AND PROTECTION OF MECHANICAL EQUIPMENT DURING CONSTRUCTION. AT THE TIME OF ROUGH INSTALLATION, DURING STORAGE ON THE CONSTRUCTION SITE AND UNTIL FINAL STARTUP OF THE HEATING, COOLING AND VENTILATING EQUIPMENT, ALL DUCT AND OTHER RELATED AIR DISTRIBUTION COMPONENT OPENINGS SHALL BE COVERED WITH TAPE, PLASTIC, SHEETMETAL OR OTHER METHODS ACCEPTABLE TO THE ENFORCING AGENCY TO REDUCE THE AMOUNT OF WATER, DUST AND DEBRIS, WHICH MAY ENTER THE SYSTEM.

2. HEATING AND AIR CONDITIONING SYSTEMS HAVE BEEN SIZED ACCORDING TO SECTION 4.507.2

3. PER SECTION 5.504.1.3, TEMPORARY VENTILATION. THE PERMANENT HVAC SYSTEM SHALL ONLY BE USED DURING CONSTRUCTION IF NECESSARY TO CONDITION THE BUILDING WITHIN THE REQUIRED TEMPERATURE RANGE FOR MATERIAL AND EQUIPMENT INSTALLATION. IF THE HVAC SYSTEM IS USED DURING CONSTRUCTION, USE RETURN AIR FILTERS WITH A MINIMUM EFFICIENCY REPORTING VALUE (MERV) OF 8, BASED ON ASHRAE 52.2-1999, OR AN AVERAGE EFFICIENCY OF 30 PERCENT BASED ON ASHRAE 52.1-1992. REPLACE ALL FILTERS IMMEDIATELY PRIOR TO OCCUPANCY.

4. PER SECTION 5.504.5.3 FILTERS. IN MECHANICALLY VENTILATED BUILDINGS, PROVIDE REGULARLY OCCUPIED AREAS OF THE BUILDING WITH AIR FILTRATION MEDIA FOR OUTSIDE AND RETURN AIR THAT PROVIDES AT LEAST A MINIMUM EFFICIENCY REPORTING VALUE (MERV) OF 8. MERV 8 FILTERS SHALL BE INSTALLED PRIOR TO OCCUPANCY, AND RECOMMENDATIONS FOR MAINTENANCE WITH FILTERS OF THE SAME VALUE SHALL BE INCLUDED IN THE OPERATION AND MAINTENANCE MANUAL.

5. MINIMUM OUTSIDE AIR HAS BEEN PROVIDED FOR NON-RESIDENTIAL AREAS BASED ON TABLE 4-3 OF THE 2016 NON-RESIDENTIAL TITLE-24 COMPLIANCE MANUAL.

6. BATHROOM EXHAUST FANS SHALL BE ENERGY STAR COMPLAINT AND DUCTED TO TERMINATE OUTSIDE THE BUILDING.

7. UNLESS FUNCTIONING AS A COMPONENT OF A WHOLE HOUSE VENTILATION SYSTEM, BATHROOM EXHAUST FANS MUST BE CONTROLLED BY A HUMIDITY CONTROL, WHICH SHALL BE CAPABLE OF ADJUSTMENT BETWEEN A RELATIVE HUMIDITY RANGE OF 50 TO 80% SEC. 4.506.1.

8. EXCEPTION TO CALGREEN SECTION: 5.504.5.3:- AN ASHRAE 10% TO 15% EFFICIENCY FILTER SHALL BE PERMITTED FOR AN HVAC UNIT MEETING THE 2016 CALIFORNIA ENERGY CODE HAVING 60000 BTU/H OR LESS CAPACITY PER FAN COIL, IF THE ENERGY USE OF THE AIR DELIVERY SYSTEM IS 0.4 W/CFM OR LESS AT DESIGN AIR FLOW.

9. INSTALLATION OF HVAC, REFRIGERATION, AND FIRE SUPPRESSION EQUIPMENT SHALL COMPLY WITH SECTIONS 5.508.1.1 AND 5.508.1.2. HVAC, REFRIGERATION, AND FIRE SUPPRESSION EQUIPMENT SHALL NOT CONTAIN CHLOROFLUOROCARBONS (CFCs) AND SHALL NOT CONTAIN HALONS (SECTION: 5.508.1).

10. FIREPLACES ARE DIRECT-VENT SEALED COMBUSTION PER CALGREEN 5.503.1

11. ADHESIVES, SEALANTS, AND CAULKS USED ON THE PROJECT SHALL MEET THE REQUIREMENTS OF SECTION 5.504.4.1.

12. 5.508.2.1 REFRIGERANT PIPING. PIPING COMPLIANT WITH THE CALIFORNIA MECHANICAL CODE SHALL BE INSTALLED TO BE ACCESSIBLE FOR LEAK PROTECTION AND REPAIRS. PIPING RUNS USING THREADED PIPE, COPPER TUBING WITH AN OUTSIDE DIAMETER (OD) LESS THAN 1/4 INCH, FLARED TUBING CONNECTIONS AND SHORT RADIUS ELBOWS SHALL NOT BE USED IN REFRIGERANT SYSTEMS EXCEPT AS NOTED BELOW.

5.508.2.1.1 THREADED PIPE. THREADED CONNECTIONS ARE PERMITTED AT THE COMPRESSOR RACK.

5.508.2.12 COPPER PIPE. COPPER TUBING WITH AN OD LESS THAN 1/4 INCH MAY BE USED IN SYSTEMS WITH A REFRIGERANT CHARGE OF 5 POUNDS OR LESS.

5.508.2.1.2.1 ANCHORAGE. ONE-FOURTH-INCH OD TUBING SHALL BE SECURELY CLAMPED TO A RIGID BASE TO KEEP VIBRATION LEVELS BELOW 8 MILS.

5.508.2.1.3 FLARED TUBING CONNECTIONS. DOUBLE-FLARED TUBING CONNECTIONS MAY BE USED FOR PRESSURE CONTROLS, VALVE PILOT LINES AND OIL.

5.508.2.1.4 ELBOWS. SHORT RADIUS ELBOWS ARE ONLY PERMITTED WHERE SPACE LIMITATIONS PROHIBITED USE OF LONG RADIUS ELBOWS.

13. 5.508.2.5 PRESSURE TESTING. THE SYSTEM SHALL BE PRESSURE TESTED DURING INSTALLATION PRIOR TO EVACUATION AND CHARGING.

5.508.2.5.1 MINIMUM PRESSURE. THE SYSTEM SHALL BE CHARGED WITH REGULATED DRY NITROGEN AND APPROPRIATE TRACER GAS TO BRING SYSTEM PRESSURE UP TO 300 PSIG MINIMUM.

5.508.2.5.2 LEAKS. CHECK THE SYSTEM FOR LEAKS, REPAIR ANY LEAKS, AND RETEST FOR PRESSURE USING THE SAME GAUGE.

5.508.2.5.3 ALLOWABLE PRESSURE CHANGE. THE SYSTEM SHALL STAND, UNALTERED, FOR 24 HOURS WITH NO MORE THAN A +/- ONE POUND PRESSURE CHANGE FROM 300 PSIG, MEASURED WITH THE SAME GAUGE.

5.508.2.6 EVACUATION. THE SYSTEM SHALL BE EVACUATED AFTER PRESSURE TESTING AND PRIOR TO CHARGING.

5.508.2.6.1 FIRST VACUUM. PULL A SYSTEM VACUUM DOWN TO AT LEAST 1,000 MICRONS (+/- 50 MICRONS), HOLD FOR 30 MINUTES.

5.508.2.6.2 SECOND VACUUM. PULL SECOND SYSTEM VACUUM TO A MINIMUM OF 500 MICRONS AND HOLD FOR 30 MINUTES.

5.508.2.6.3 THIRD VACUUM. PULL A THIRD VACUUM DOWN TO A MINIMUM OF 300 MICRONS, AND HOLD FOR 24 HOURS WITH A MAXIMUM DRIFT OF 100 MICRONS OVER A 24-HOUR PERIOD.

COMMISSIONING NOTES:

1. 5.410.2 COMMISSIONING. [N] FOR NEW BUILDINGS 10,000 SQUARE FEET AND OVER, BUILDING COMMISSIONING SHALL BE INCLUDED IN THE DESIGN AND CONSTRUCTION PROCESSES OF THE BUILDING PROJECT TO VERIFY THAT THE BUILDING SYSTEMS AND COMPONENTS MEET THE OWNER'S OR OWNER REPRESENTATIVE'S PROJECT REQUIREMENTS. COMMISSIONING SHALL BE PERFORMED IN ACCORDANCE WITH THIS SECTION BY TRAINED PERSONNEL WITH EXPERIENCE ON PROJECTS OF COMPARABLE SIZE AND COMPLEXITY. COMMISSIONING REQUIREMENTS SHALL INCLUDE:

1. OWNER'S OR OWNER REPRESENTATIVE'S PROJECT REQUIREMENTS.
2. BASIS OF DESIGN.
3. COMMISSIONING MEASURES SHOWN IN THE CONSTRUCTION DOCUMENTS.
4. COMMISSIONING PLAN.
5. FUNCTIONAL PERFORMANCE TESTING.
6. DOCUMENTATION AND TRAINING.
7. COMMISSIONING REPORT.

12. THIRD PARTY INSPECTION REQUIRED TO CERTIFY THE CALGREEN MEASURES.

13. THE HVAC SYSTEM SHALL BE BALANCED IN ACCORDANCE WITH APPROVED NATIONAL STANDARD PER 5.4.10.4.3.1.

FIRE & SMOKE DAMPER NOTES

FIRE DAMPERS AND FIRE SMOKE DAMPERS SHALL COMPLY WITH THE FOLLOWING:

A. ALL FIRE DAMPERS ARE TO BE INSTALLED IN ACCORDANCE WITH MFR'S LISTING AND INSTALLATION INSTRUCTIONS.

B. FIRE AND SMOKE DAMPERS SHALL BE LISTED AND BEAR THE LABEL OF AN APPROVED TESTING AGENCY INDICATING COMPLIANCE WITH THE STANDARDS IN THIS SECTION. FIRE DAMPERS SHALL COMPLY WITH THE REQUIREMENTS OF UL 555. ONLY FIRE DAMPERS LABELED FOR USE IN DYNAMIC SYSTEMS SHALL BE INSTALLED IN HEATING, VENTILATION AND AIR-CONDITIONING SYSTEMS DESIGNED TO OPERATE FANS DURING A FIRE. SMOKE DAMPERS SHALL COMPLY WITH THE REQUIREMENTS OF UL 555S. COMBINATION FIRE SMOKE DAMPERS SHALL COMPLY WITH BOTH UL 555 AND UL 555S. CEILING RADIATION DAMPERS SHALL COMPLY WITH THE REQUIREMENTS OF UL 555C.

C. FIRE DAMPERS SHALL HAVE MINIMUM DAMPER RATING OF 1.5 HOURS WHEN INSTALLED IN LESS THAN 3-HOUR RATED ASSEMBLIES. RATINGS FOR DAMPERS INSTALLED IN WALLS RATED AT 3 HORS OR MORE SHALL HAVE A MINIMUM FIRE RATING OF 3 HOURS.

D. FIRE AND SMOKE DAMPERS SHALL BE PROVIDED WITH AN APPROVED MEANS OF ACCESS WHICH IS LARGE ENOUGH TO PERMIT INSPECTION AND MAINTENANCE OF THE DAMPER AND ITS OPERATING PARTS. THE ACCESS OPENING SHALL NOT REDUCE THE FIRE RESISTANCE RATING OF THE ASSEMBLY. FIRE AND SMOKE DAMPER ACCESS POINTS SHALL BE PERMANENTLY IDENTIFIED ON THE EXTERIOR HAVING LETTERS NOT LESS THAN 1/2" HIGH READING "FIRE DAMPER" OR "FIRE/SMOKE DAMPER".

E. ALL DAMPERS MUST HAVE END SWITCHES FOR FIRE LIFE SAFETY.

UNLESS SPECIFICALLY SHOWN ON THE MECHANICAL PLANS, DUCT SMOKE DETECTORS SHALL NOT BE THE METHOD FOR ACTUATION OF FIRE SMOKE DAMPERS.

FIRE ALARM CONTRACTOR SHALL PROVIDE ACTUATION DEVICE FOR COMBINATION FIRE SMOKE DAMPERS PER SECTION 717.3.3.1 OF THE BUILDING CODE:

1. WHERE A SMOKE DAMPER IS INSTALLED ABOVE SMOKE BARRIER DOORS IN A SMOKE BARRIER, A SPOT-TYPE DETECTOR LISTED FOR RELEASING SERVICE SHALL BE INSTALLED ON EITHER SIDE OF THE SMOKE BARRIER DOOR OPENING.
2. WHERE A COMBINATION FIRE SMOKE DAMPER IS INSTALLED WITHIN AN AIR TRANSFER OPENING IN A WALL, A SPOT-TYPE DETECTOR LISTED FOR RELEASING SERVICE SHALL BE INSTALLED WITHIN 5 FEET (1524 MM) HORIZONTALLY OF THE DAMPER.
3. WHERE A COMBINATION FIRE SMOKE DAMPER IS INSTALLED IN A CORRIDOR WALL OR CEILING, THE DAMPER SHALL BE PERMITTED TO BE CONTROLLED BY A SMOKE DETECTION SYSTEM INSTALLED IN THE CORRIDOR.
4. WHERE A SMOKE DETECTION SYSTEM IS INSTALLED IN ALL AREAS SERVED BY THE DUCT IN WHICH THE DAMPER WILL BE LOCATED, THE SMOKE DAMPERS SHALL BE PERMITTED TO BE CONTROLLED BY THE SMOKE DETECTION SYSTEM.

FIRE AND SMOKE DAMPERS ACTUATION NOTES:

1. LOCATION OF SMOKE DETECTOR: WITHIN 5 FEET HORIZONTALLY FROM DAMPER. SEE FIRE ALARM DEFERRED SUBMITTAL.
2. SMOKE CONTROL NARRATIVE: SEE FIRE ALARM DEFERRED SUBMITTAL.
3. SEQUENCE OF OPERATION:
   A. DAMPER NORMALLY CLOSED, HELD OPEN BY POWER.
   B. IF SMOKE OR EXCESS HEAT IS DETECTED IN THE AIR DUCT, DAMPER SHALL CLOSE AND RTU/FAN SHALL SHUT DOWN.
   C. IF POWER IS INTERRUPTED, DAMPER SHALL FAIL CLOSED.
4. DETECTOR BY OTHERS. SEE FIRE ALARM DEFERRED SUBMITTAL.
5. OPERATING TEMPERATURE OF ACTUATOR SHALL BE 165 DEGREES F.
6. OVERRIDE SWITCH: SWITCH TO BE LOCATED NEXT TO THE FIRE CONTROL PANEL NEXT TO THE ENTRANCE OF THE LOBBY.
7. DAMPER ACTUATOR SHALL BE INTERLOCKED WITH RTU/FAN TO SHUT DOWN ASSOCIATED UNIT WHEN DAMPER IS CLOSED.
8. DAMPER SHALL BE NORMALLY CLOSED, AND SHALL FAIL CLOSED WHEN POWER IS CUT.

PYATOK
1611 TELEGRAPH AVE.
SUITE 200
OAKLAND, CA 94612
T. 510.465.7010 | F. 510.465.8575
www.pyatok.com

THE UNITY COUNCIL
1900 FRUITVALE AVE
#2A
OAKLAND, CA 94601

EMERALD CITY ENGINEERS, INC
21705 Highway 99 Lynnwood, WA 98036 425-741-1200 tel / 1201 fax

2700 INTERNATIONAL
OAKLAND, CA 94601

STAMP:
REGISTERED PROFESSIONAL ENGINEER
MASSAMAGHAN KONE
EXP. 03-31-24
MECHANICAL
STATE OF CALIFORNIA
12/09/22

ISSUE SCHEDULE

100 SD	5/11/22
50 DD	7/15/22
100 DD	9/16/22
PRICING SET	11/11/22
PERMIT SET	12/09/22

REVISION SCHEDULE

NO.	ISSUE	DATE

JOB NUMBER:	2049-008
DRAWN BY:	TJP
CHECKED BY:	MK
ISSUE DATE:	12/09/2022
SCALE:	
TITLE:	

NOTES

SHEET:

M0.02

PRELIMINARY - Not for Construction -

© 2019 PYATOK ARCHITECTURE & URBAN DESIGN

4/22/2022 6:28:22 PM

COPYRIGHT 2022, EMERALD CITY ENGINEERS, INC.

FLAG NOTES:

1. HVAC CONTRACTOR SHALL PROVIDE SHEET METAL DRAIN PAN BELOW HEAT PUMPS WITH 3/4" DRAIN CONNECTION. DRAIN PIPING PROVIDED BY PLUMBING CONTRACTOR.

30x30 S.O.

GEF-1

GARAGE MAKE-UP AIR FROM ENTRY – 16 SF FREE AREA MIN.

PARKING GARAGE 131

VENTILATION CALCULATION		
AREA (SQ FT)	MINIMUM INTERMITTENT VENTILATION*	SUPPLIED VENTILATION
10,560	0.75 CFM/SF 7,920 CFM	8,000 CFM INTERMITTENT

*See 2019 California Mechanical Code Table 403.7

GARAGE MAKE-UP AIR 16 SF FREE AREA MIN.

CO SENSOR MTD 60" AFF (TYP)

FUTURE COMMERCIAL HEAT PUMPS

24x24 LOUVER

24x6 UP

20x20 LOUVER

12x12 LOUVER

16x16 LOUVER

28x16 LOUVER

14x14 S.O.

ELEC 130

TRASH 129

MAINTENANCE 128

BIKE ROOM 127

MECH 126

STAIR 2 S2-1

EF-1 EF-2 EF-3 EF-4 EF-5 EF-6 EF-7

FCU-1 FCU-2 FCU-5 FCU-6 FCU-7

STAIR 1 S1.1

ELEVATOR 18.2 E1

LOBBY 100

LEASING 102

MAIL 101

PACKAGE 103

PROJECT MGMT 104

CHIEF 107

SERVICE OFFICE 112

STORAGE 117

STORAGE 115

WIC-1 120

WIC-2 119

WIC-3 125

CORRIDOR 121

COMMERCIAL 122

COMMERCIAL 123

COMMERCIAL 124

HVAC SYSTEM FOR COMMERCIAL SPACE TO BE PROVIDED BY FUTURE TENANTS. SPLIT SYSTEM HEAT PUMPS WITH CONDENSERS LOCATED IN THE GARAGE. VENTILATION AIR AND ENVIRONMENTAL AIR TO TERMINATE AT STOREFRONT LOUVERS.

HVAC SYSTEM FOR COMMERCIAL SPACE TO BE PROVIDED BY FUTURE TENANTS. SPLIT SYSTEM HEAT PUMPS WITH CONDENSERS LOCATED IN THE GARAGE. VENTILATION AIR AND ENVIRONMENTAL AIR TO TERMINATE AT STOREFRONT LOUVERS.

HVAC SYSTEM FOR COMMERCIAL SPACE TO BE PROVIDED BY FUTURE TENANTS. SPLIT SYSTEM HEAT PUMPS WITH CONDENSERS LOCATED IN THE GARAGE. VENTILATION AIR AND ENVIRONMENTAL AIR TO TERMINATE AT STOREFRONT LOUVERS.

FUTURE 11 SPACE

PROVIDE 2HR RATED ENCLOSURE

12x12 LOUVER

18x12 LOUVER

40x12

40x12 EXHAUST LOUVER FOR FUTURE RETAIL

40x12 INTAKE LOUVER FOR FUTURE RETAIL

24x20 INTAKE LOUVER FOR FUTURE RETAIL

24x20 EXHAUST LOUVER FOR FUTURE RETAIL

60x12 EXHAUST LOUVER FOR FUTURE RETAIL

60x12 INTAKE LOUVER FOR FUTURE RETAIL

LEVEL 1

SCALE: 1/8"=1'

N

PYATOK
1611 TELEGRAPH AVE.
SUITE 200
OAKLAND, CA 94612
T. 510.465.7010 | F. 510.465.8575
www.pyatok.com

THE UNITY COUNCIL
1900 FRUITVALE AVE
#2A
OAKLAND, CA 94601

EMERALD CITY ENGINEERS, INC
21705 Highway 99 Lynnwood, WA 98036 425-741-1200 tel / 1201 fax

2700 INTERNATIONAL

OAKLAND, CA 94601

STAMP:

STEPHEN PROFESSIONAL ENGINEER MASSAMAGHAN 20948 EXP. 03-31-24 MECHANICAL STATE OF CALIFORNIA

12/09/22

ISSUE SCHEDULE

100 SD	5/11/22
50 DD	7/15/22
100 DD	9/16/22
PRICING SET	11/11/22
PERMIT SET	12/09/22

REVISION SCHEDULE

NO.	ISSUE	DATE

JOB NUMBER:	2049-008
DRAWN BY:	TJP
CHECKED BY:	MK
ISSUE DATE:	12/09/2022
SCALE:	
TITLE:	BUILDING PLANS - LEVEL 1

SHEET:

M2.01

PRELIMINARY - Not for Construction -

© 2019 PYATOK ARCHITECTURE & URBAN DESIGN

4/22/2022 6:28:22 PM

COPYRIGHT 2022, EMERALD CITY ENGINEERS, INC.
TPWZ J:\2049-008 2700 INTERNATIONAL, OAKLAND, CA\DWG\M201 – BUILDING PLANS – LEVEL 1.DWG 12-01-2022 12:12

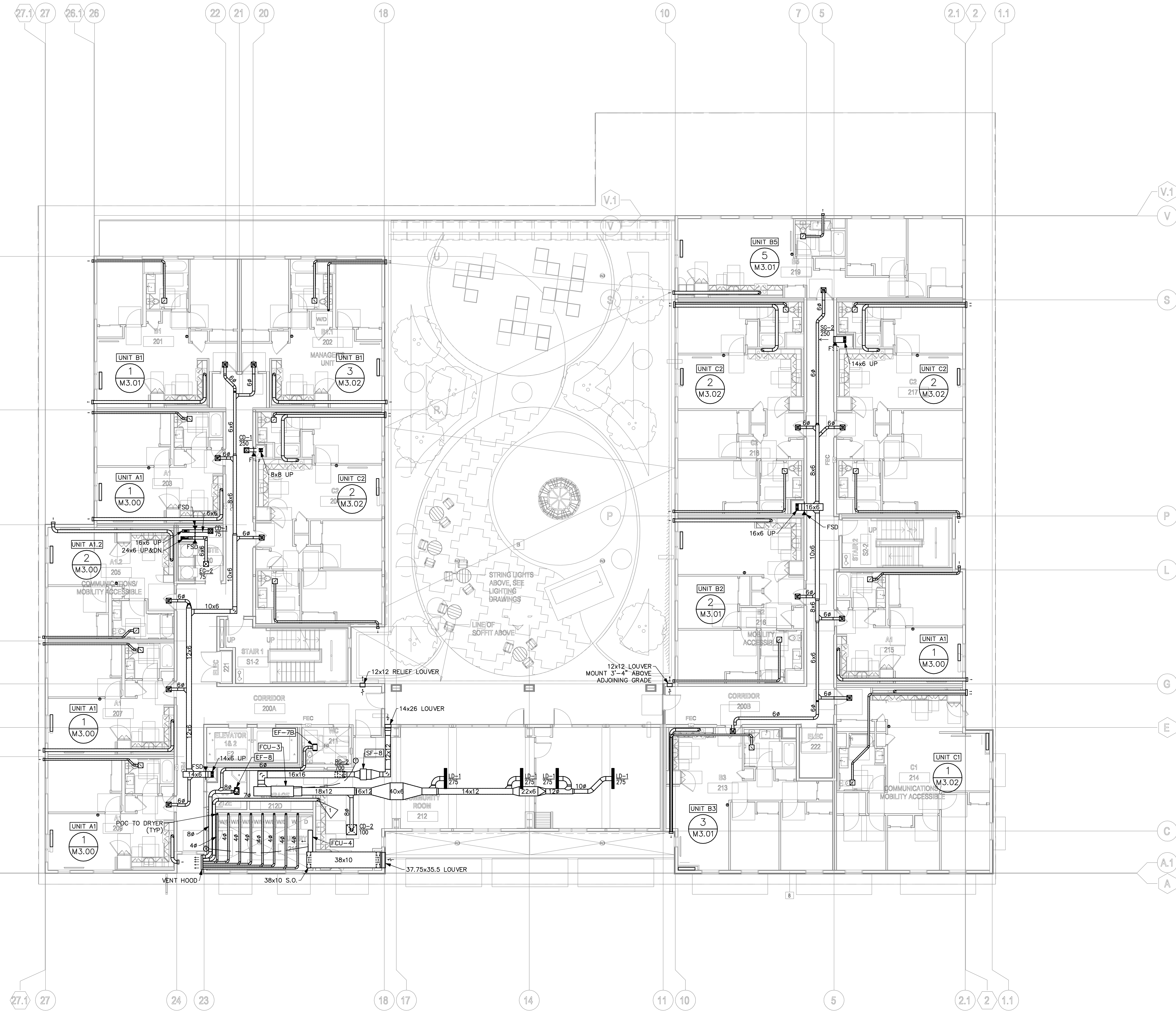

LEVEL 2

SCALE: 1/8"=1'

N

NOTES:

UNIT A1 = UNIT TYPE. UNIT TYPE A1 FOR EXAMPLE.

1 / M3.00 = ENLARGED PLAN. FOR EXAMPLE, REFER TO DETAIL 1 ON M3.00.

FLAG NOTES:

1 CONNECT TO RESIDENTIAL STYLE RANGE HOOD.

PYATOK
1611 TELEGRAPH AVE.
SUITE 200
OAKLAND, CA 94612
T. 510.465.7010 | F. 510.465.8575
www.pyatok.com

THE UNITY COUNCIL
1900 FRUITVALE AVE
#2A
OAKLAND, CA 94601

EMERALD CITY ENGINEERS, INC
21705 Highway 99 Lynnwood, WA 98036 425-741-1200 tel / 1201 fax

2700 INTERNATIONAL

OAKLAND, CA 94601

STAMP:

12/09/22

ISSUE SCHEDULE

100 SD	5/11/22
50 DD	7/15/22
100 DD	9/16/22
PRICING SET	11/11/22
PERMIT SET	12/09/22

REVISION SCHEDULE

NO.	ISSUE	DATE

JOB NUMBER:	2049-008
DRAWN BY:	TJP
CHECKED BY:	MK
ISSUE DATE:	12/09/2022
SCALE:	
TITLE:	

BUILDING PLANS - LEVEL 2

SHEET:

M2.02

PRELIMINARY - Not for Construction -

© 2019 PYATOK ARCHITECTURE & URBAN DESIGN

4/22/2022 6:28:22 PM

COPYRIGHT 2022, EMERALD CITY ENGINEERS, INC.

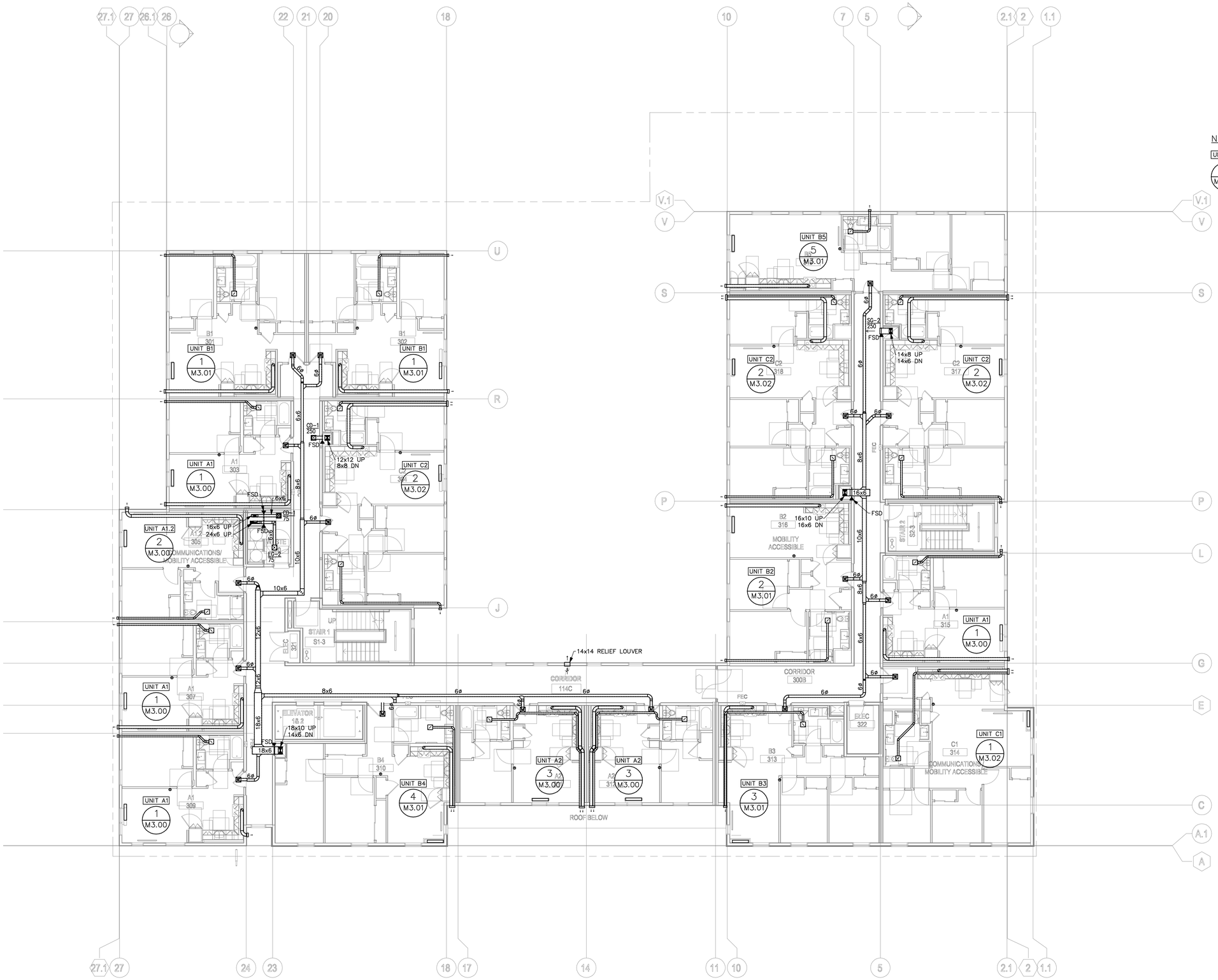

NOTES:

UNIT A1 = UNIT TYPE. UNIT TYPE A1 FOR EXAMPLE.

1 / M3.00 = ENLARGED PLAN. FOR EXAMPLE, REFER TO DETAIL 1 ON M3.00.

LEVEL 3

SCALE: 1/8"=1'

PYATOK
1611 TELEGRAPH AVE.
SUITE 200
OAKLAND, CA 94612
T. 510.465.7010 | F. 510.465.8575
www.pyatok.com

THE UNITY COUNCIL
1900 FRUITVALE AVE
#2A
OAKLAND, CA 94601

EMERALD CITY ENGINEERS, INC
21705 Highway 99 Lynnwood, WA 98036 425-741-1200 tel / 1201 fax

2700 INTERNATIONAL

OAKLAND, CA 94601

STAMP:

REGISTERED PROFESSIONAL ENGINEER MASSAMAGHAN KOMAR NO. EXP. 03-31-24 MECHANICAL STATE OF CALIFORNIA

12/09/22

ISSUE SCHEDULE

100 SD	5/11/22
50 DD	7/15/22
100 DD	9/16/22
PRICING SET	11/11/22
PERMIT SET	12/09/22

REVISION SCHEDULE

NO.	ISSUE	DATE

JOB NUMBER:	2049-008
DRAWN BY:	TJP
CHECKED BY:	MK
ISSUE DATE:	12/09/2022
SCALE:	
TITLE:	BUILDING PLANS - LEVEL 3

SHEET:

M2.03

PRELIMINARY - Not for Construction -

© 2019 PYATOK ARCHITECTURE & URBAN DESIGN

4/22/2022 6:28:22 PM

COPYRIGHT 2022, EMERALD CITY ENGINEERS, INC.
TPIKE J:\2049-008 2700 INTERNATIONAL, OAKLAND, CA\DWG\M203 - BUILDING PLANS - LEVEL 3.DWG 12-01-2022 12:11

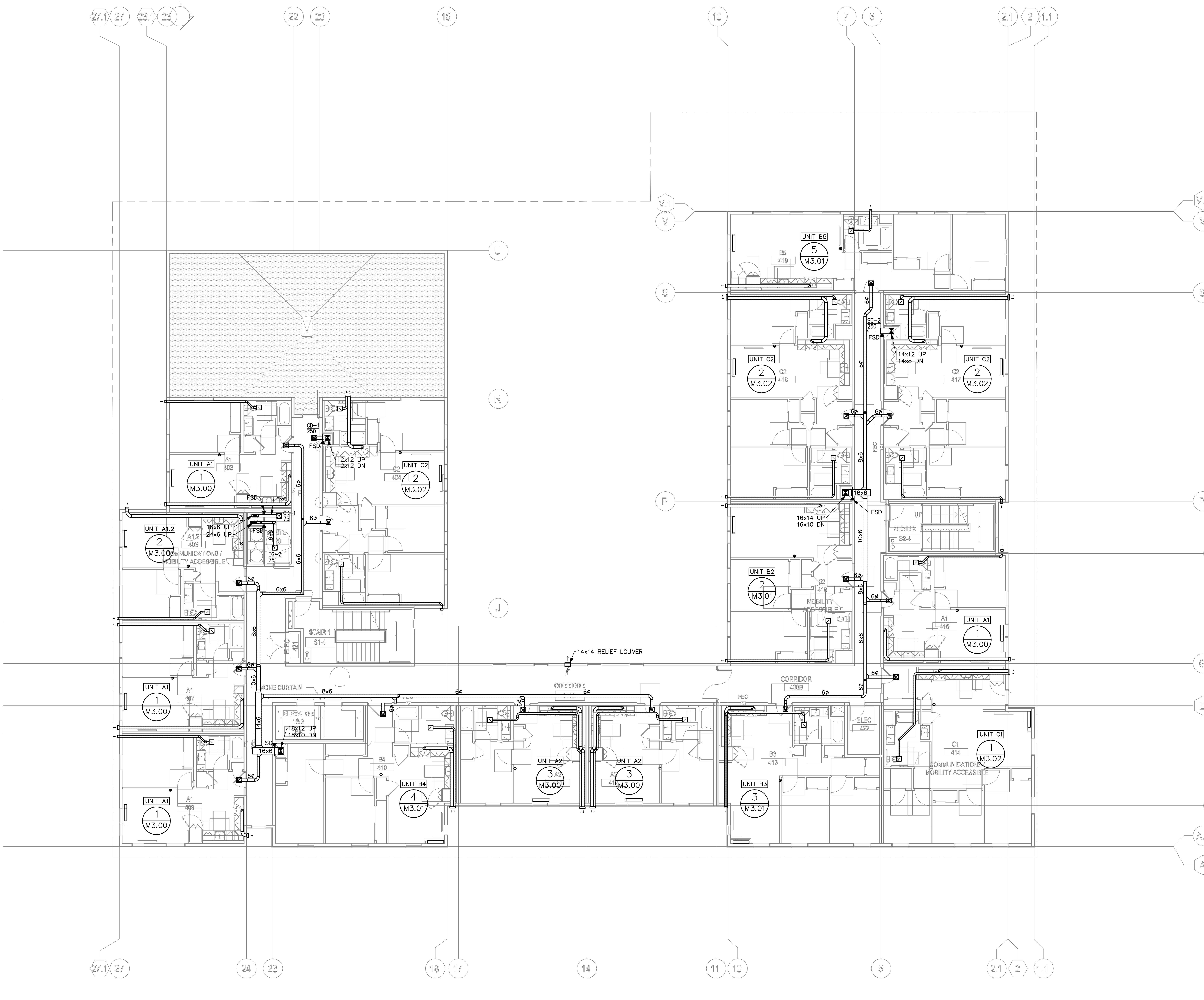

LEVEL 4

SCALE: 1/8"=1'

NOTES:

UNIT A1 = UNIT TYPE. UNIT TYPE A1 FOR EXAMPLE.

1 / M3.00 = ENLARGED PLAN. FOR EXAMPLE, REFER TO DETAIL 1 ON M3.00.

PYATOK
1611 TELEGRAPH AVE.
SUITE 200
OAKLAND, CA 94612
T. 510.465.7010 | F. 510.465.8575
www.pyatok.com

THE UNITY COUNCIL
1900 FRUITVALE AVE
#2A
OAKLAND, CA 94601

EMERALD CITY ENGINEERS, INC
21705 Highway 99 Lynnwood, WA 98036 425-741-1200 tel / 1201 fax

2700 INTERNATIONAL
OAKLAND, CA 94601

STAMP:

12/09/22

ISSUE SCHEDULE

100 SD	5/11/22
50 DD	7/15/22
100 DD	9/16/22
PRICING SET	11/11/22
PERMIT SET	12/09/22

REVISION SCHEDULE

NO.	ISSUE	DATE

JOB NUMBER:	2049-008
DRAWN BY:	TJP
CHECKED BY:	MK
ISSUE DATE:	12/09/2022
SCALE:	
TITLE:	

BUILDING PLANS - LEVEL 4

SHEET:

M2.04

PRELIMINARY - Not for Construction -

© 2019 PYATOK ARCHITECTURE & URBAN DESIGN

4/22/2022 6:28:22 PM

COPYRIGHT 2022, EMERALD CITY ENGINEERS, INC.

PYATOK
1611 TELEGRAPH AVE.
SUITE 200
OAKLAND, CA 94612
T. 510.465.7010 | F. 510.465.8575
www.pyatok.com

THE UNITY COUNCIL
1900 FRUITVALE
AVE
#2A
OAKLAND, CA
94601

EMERALD CITY ENGINEERS, INC
21705 Highway 99 Lynnwood, WA 98036 425-741-1200 tel / 1201 fax

NOTES:

UNIT A1 = UNIT TYPE. UNIT TYPE A1 FOR EXAMPLE.

1 / M3.00 = ENLARGED PLAN. FOR EXAMPLE, REFER TO DETAIL 1 ON M3.00.

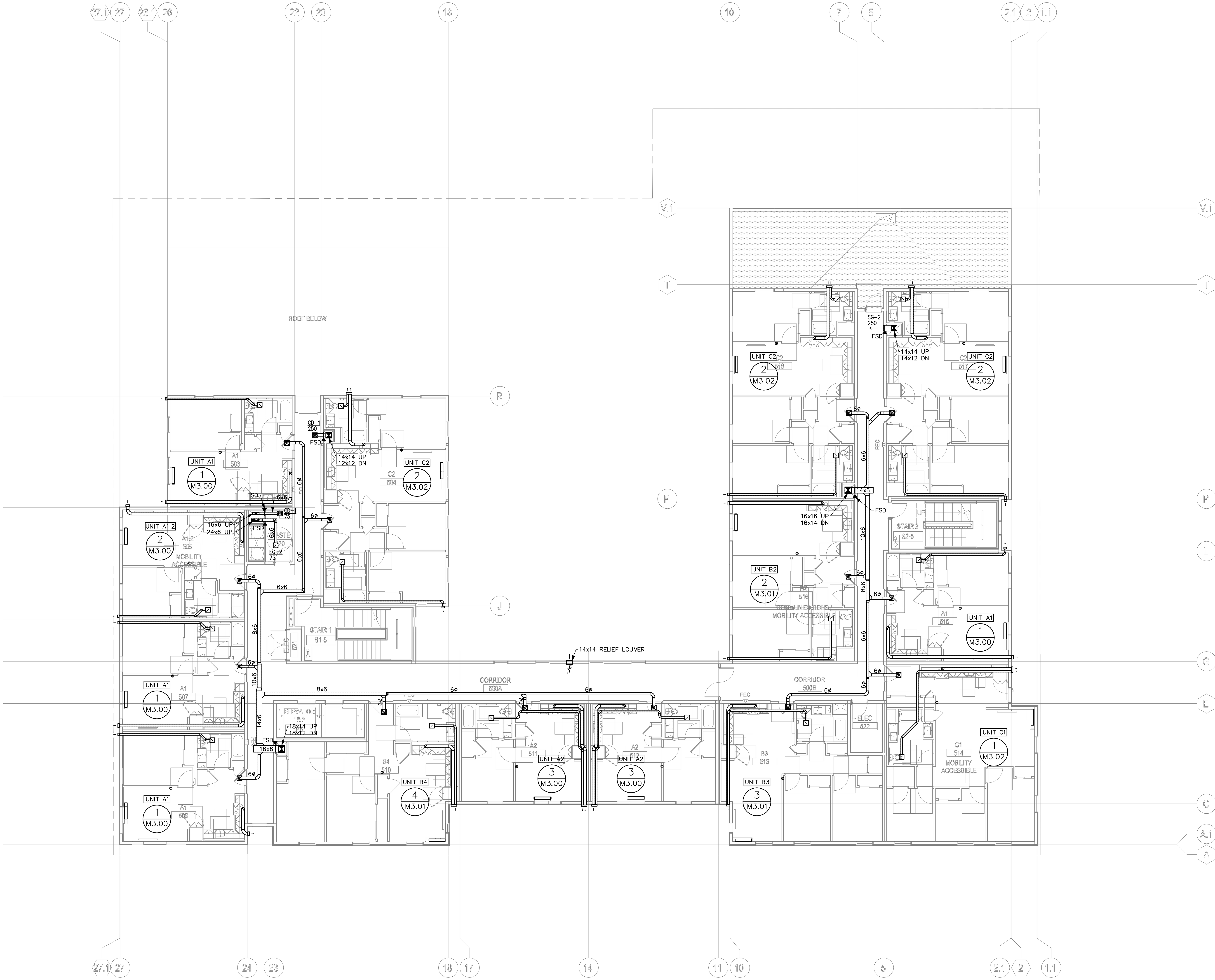

LEVEL 5
SCALE: 1/8"=1'

2700 INTERNATIONAL
OAKLAND, CA 94601

STAMP:
12/09/22

ISSUE SCHEDULE

100 SD	5/11/22
50 DD	7/15/22
100 DD	9/16/22
PRICING SET	11/11/22
PERMIT SET	12/09/22

REVISION SCHEDULE

NO.	ISSUE	DATE

JOB NUMBER:	2049-008
DRAWN BY:	TJP
CHECKED BY:	MK
ISSUE DATE:	12/09/2022
SCALE:	
TITLE:	

BUILDING PLANS - LEVEL 5

SHEET:
M2.05

PRELIMINARY - Not for Construction -

© 2019 PYATOK ARCHITECTURE & URBAN DESIGN

4/22/2022 6:28:22 PM

COPYRIGHT 2022, EMERALD CITY ENGINEERS, INC.
TPKE J:\2049-008 2700 INTERNATIONAL, OAKLAND, CA\DWG\M205 - BUILDING PLANS - LEVEL 5.DWG 12-01-2022 12:11

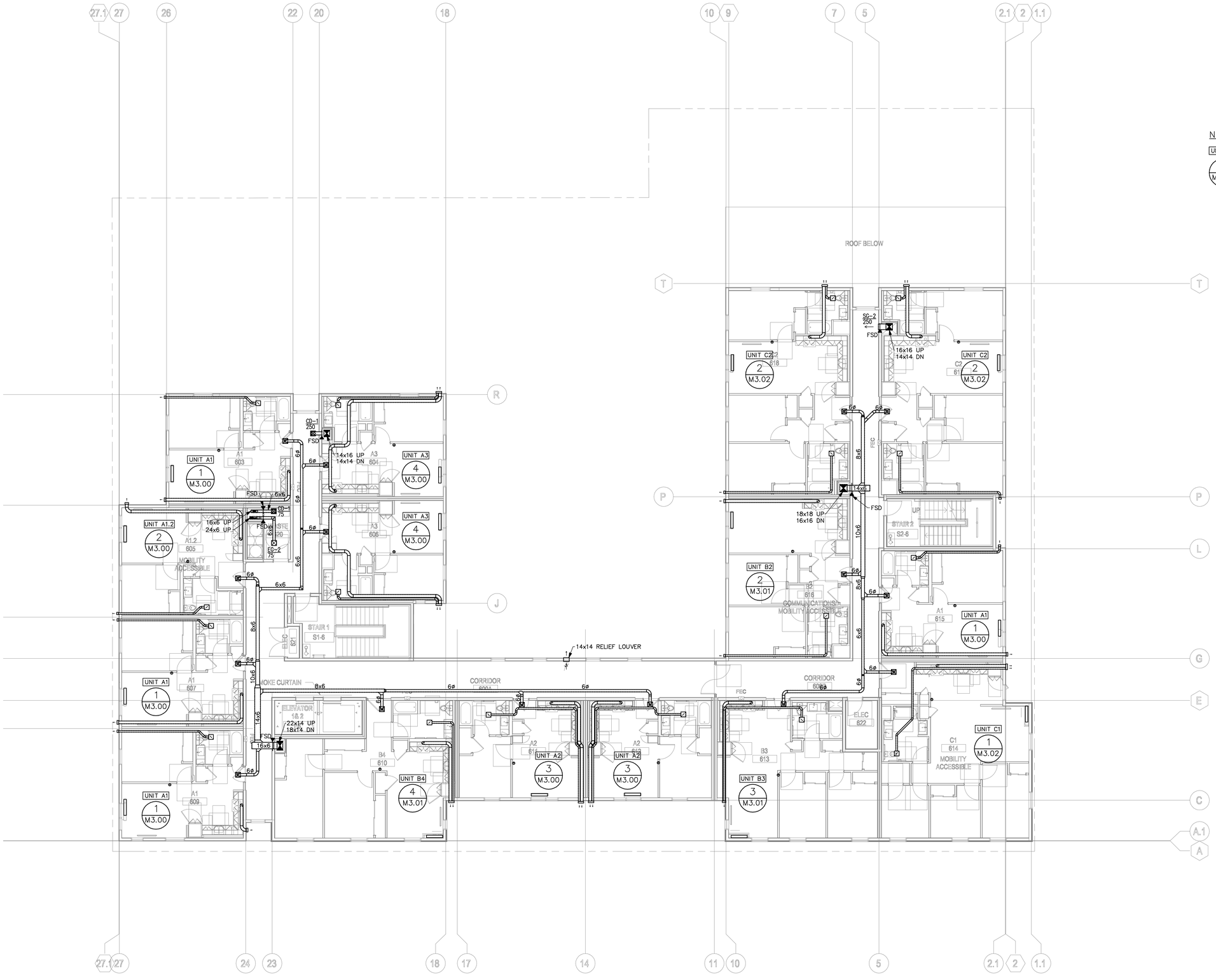

NOTES:

UNIT A1 = UNIT TYPE. UNIT TYPE A1 FOR EXAMPLE.

1 / M3.00 = ENLARGED PLAN. FOR EXAMPLE, REFER TO DETAIL 1 ON M3.00.

LEVEL 6

SCALE: 1/8"=1'

PYATOK
1611 TELEGRAPH AVE.
SUITE 200
OAKLAND, CA 94612
T. 510.465.7010 | F. 510.465.8575
www.pyatok.com

THE UNITY COUNCIL
1900 FRUITVALE AVE
#2A
OAKLAND, CA 94601

EMERALD CITY ENGINEERS, INC
21705 Highway 99 Lynnwood, WA 98036 425-741-1200 tel / 1201 fax

2700 INTERNATIONAL

OAKLAND, CA 94601

STAMP:

REGISTERED PROFESSIONAL ENGINEER
MASSAMAGHAN KOUR
NO. 12048
EXP. 03-31-24
MECHANICAL
STATE OF CALIFORNIA
12/09/22

ISSUE SCHEDULE

100 SD	5/11/22
50 DD	7/15/22
100 DD	9/16/22
PRICING SET	11/11/22
PERMIT SET	12/09/22

REVISION SCHEDULE

NO.	ISSUE	DATE

JOB NUMBER:	2049-008
DRAWN BY:	TJP
CHECKED BY:	MK
ISSUE DATE:	12/09/2022

SCALE:

TITLE:

BUILDING PLANS - LEVEL 6

SHEET:

M2.06

PRELIMINARY - Not for Construction -

© 2019 PYATOK ARCHITECTURE & URBAN DESIGN

4/22/2022 6:28:22 PM

COPYRIGHT 2022, EMERALD CITY ENGINEERS, INC.
TPIKE J:\2049-008 2700 INTERNATIONAL, OAKLAND, CA\DWG\M206 - BUILDING PLANS - LEVEL 6.DWG 12-01-2022 12:10

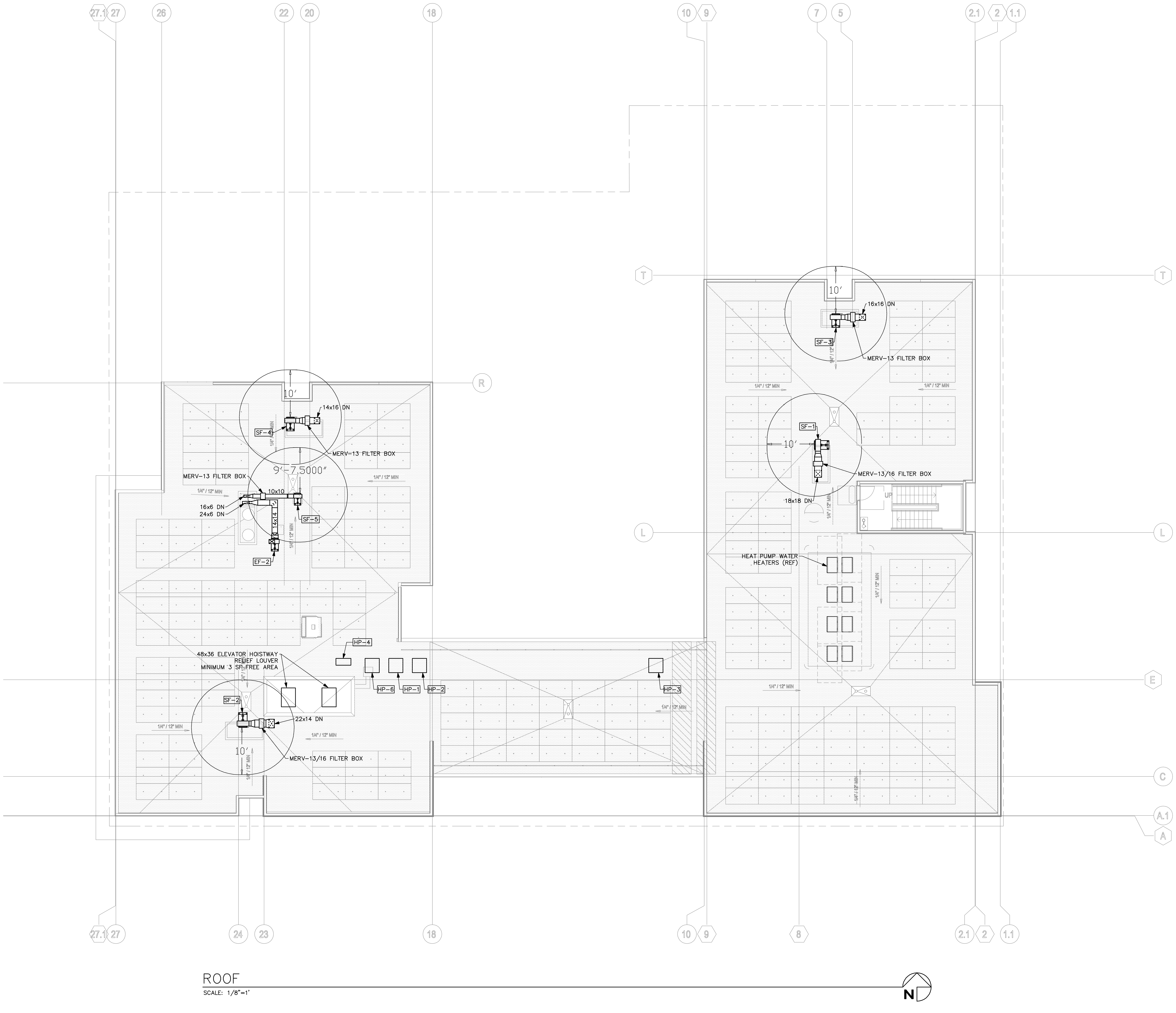

ROOF

SCALE: 1/8"=1'

NOTES:

1.SEE DETAILS ON SHEET M4.01 FOR ROOFTOP EQUIPMENT MOUNTING.

PYATOK
1611 TELEGRAPH AVE.
SUITE 200
OAKLAND, CA 94612
T. 510.465.7010 | F. 510.465.8575
www.pyatok.com

THE UNITY COUNCIL
1900 FRUITVALE
AVE
#2A
OAKLAND, CA
94601

EMERALD CITY
ENGINEERS, INC
21705 Highway 99 Lynnwood, WA 98036 425-741-1200 tel / 1201 fax

2700 INTERNATIONAL
OAKLAND, CA 94601

STAMP:

REGISTERED PROFESSIONAL ENGINEER
MASSAMAGHAN KONE
No.
EXP. 03-31-24
MECHANICAL
STATE OF CALIFORNIA
12/09/22

ISSUE SCHEDULE

100 SD	5/11/22
50 DD	7/15/22
100 DD	9/16/22
PRICING SET	11/11/22
PERMIT SET	12/09/22

REVISION SCHEDULE

NO.	ISSUE	DATE

JOB NUMBER:	2049-008
DRAWN BY:	TJP
CHECKED BY:	MK
ISSUE DATE:	12/09/2022
SCALE:	

TITLE:

BUILDING PLANS - ROOF

SHEET:

M2.07

PRELIMINARY - Not for Construction -

© 2019 PYATOK ARCHITECTURE & URBAN DESIGN

4/22/2022 6:28:22 PM

COPYRIGHT 2022, EMERALD CITY ENGINEERS, INC.

TPIKE J:\2049-008 2700 INTERNATIONAL, OAKLAND, CA\DWG\M207 - BULDING PLANS - ROOF.DWG 12-01-2022 12:10

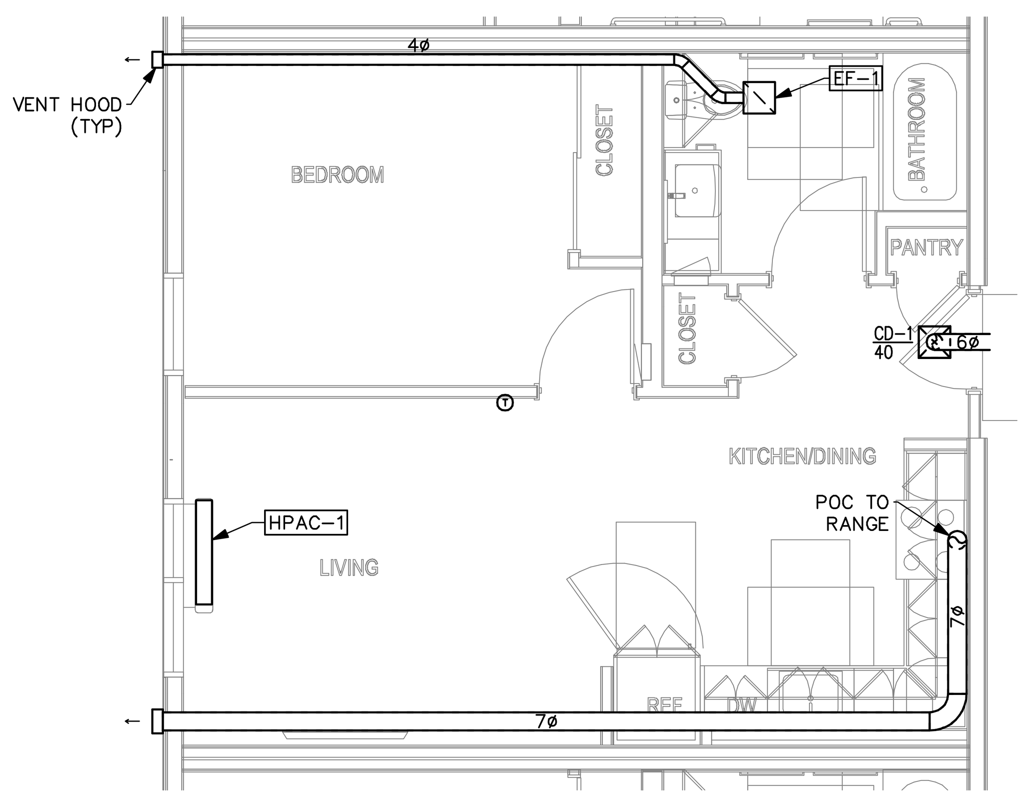

UNIT TYPE A1 (1 / M3.00)
SCALE: 1/4" = 1'-0"

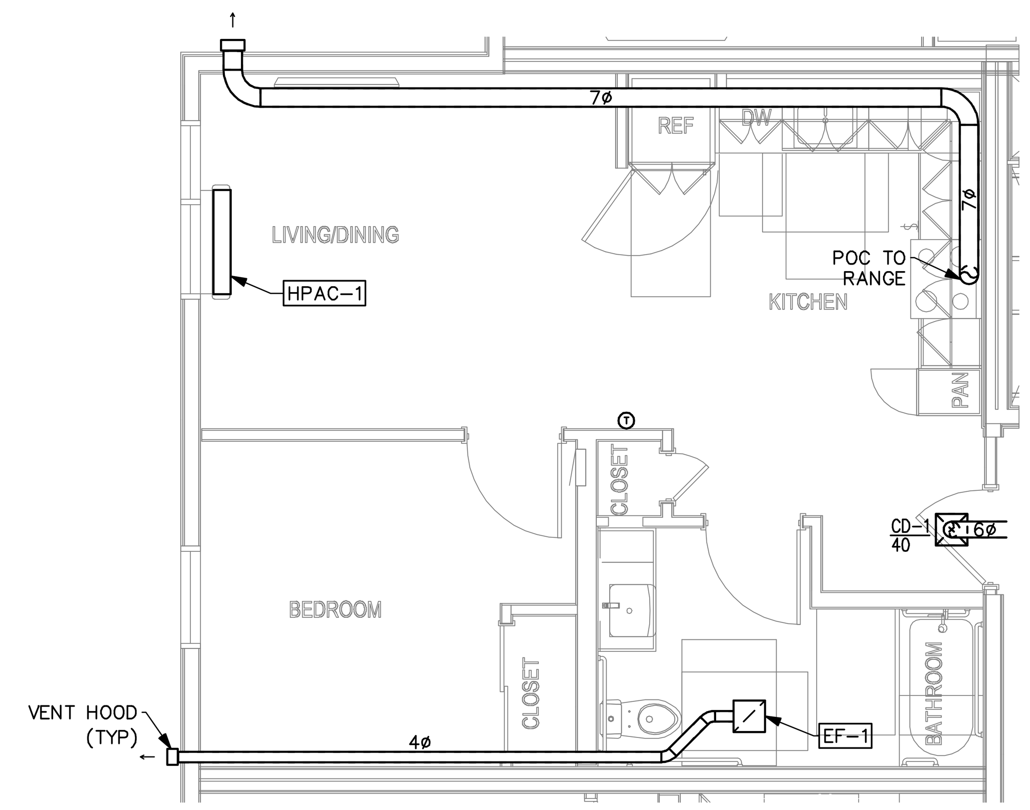

UNIT TYPE A1.2 – MOBILITY (2 / M3.00)
SCALE: 1/4" = 1'-0"

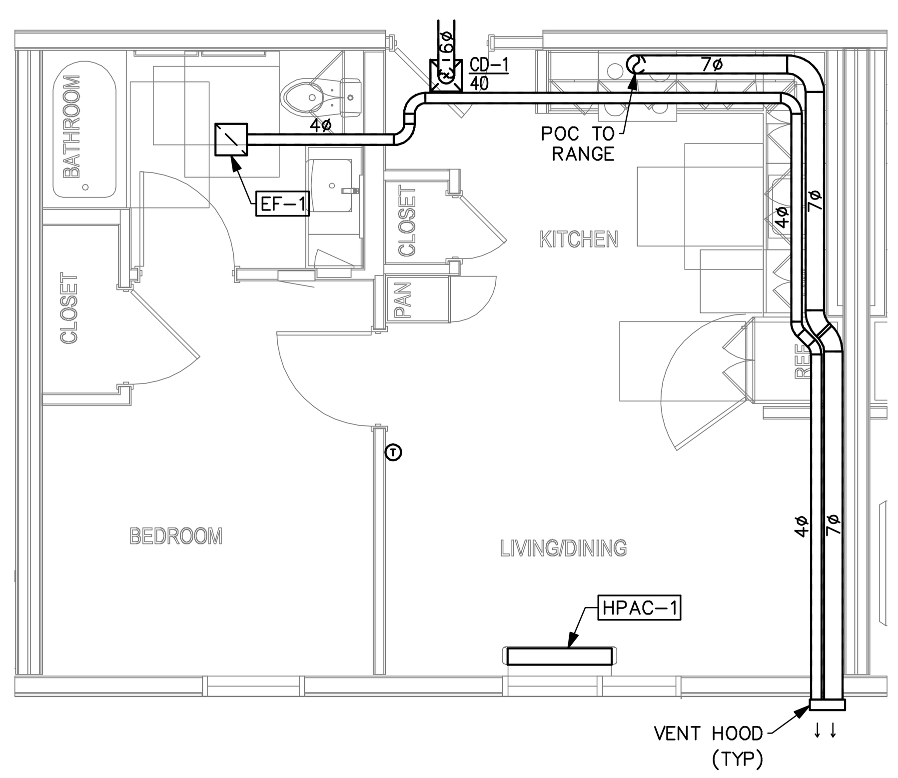

UNIT TYPE A2 (3 / M3.00)
SCALE: 1/4" = 1'-0"

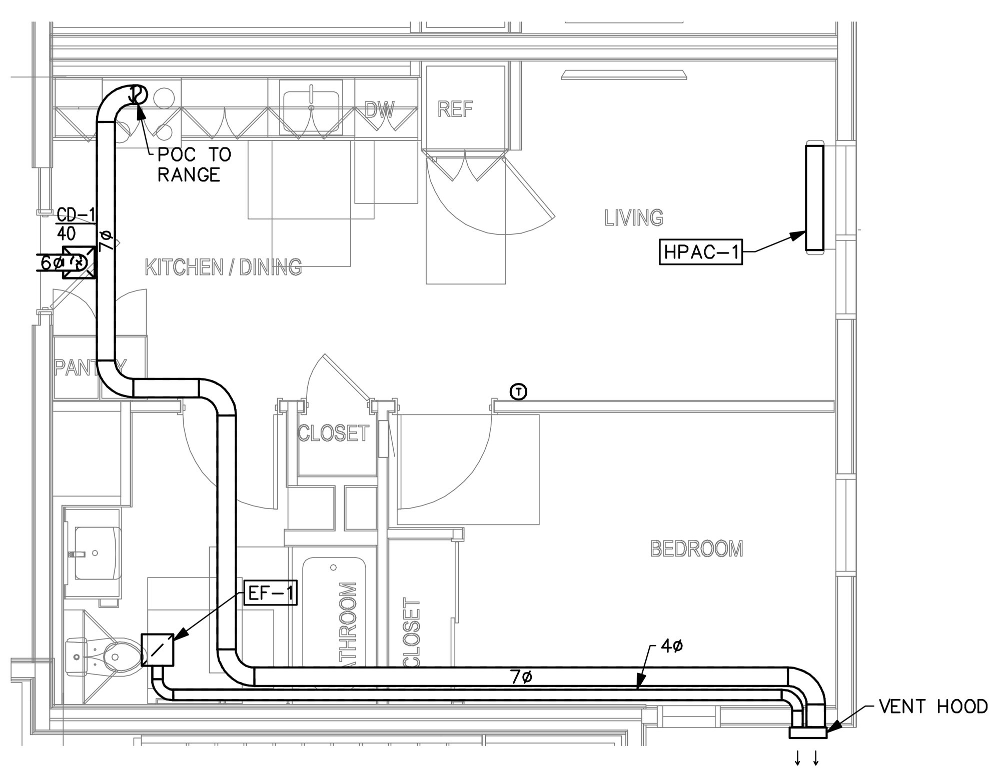

UNIT TYPE A3 (4 / M3.00)
SCALE: 1/4" = 1'-0"

PLAN NOTES

1. REFER TO OVERALL FLOOR PLANS FOR SLIGHT DUCT ROUTING VARIATIONS FOR EACH UNIT TYPE.
2. MOUNT THERMOSTAT 48" AFF TO TOP.

EXHAUST VENT CAPS

EXHAUST VENT CAPS FOR RESIDENTIAL UNIT DRYER, BATHROOM AND RANGE EXHAUST SHALL BE ALUMINUM VENT CAPS PAINTED TO MATCH ADJACENT EXTERIOR SURFACE. REVERSOMATIC MODEL ECA OR EQUAL VENT HOODS SHOULD HAVE A 4" MINIMUM OPENING DEPTH FROM THE FACE OF THE WALL FOR PROPER OPERATION OF FANS. CONTRACTOR MAY PROVIDE SINGLE HOOD ENCLOSING MULTIPLE VENTS. REF DETAIL 5 ON M4.00.

PYATOK
1611 TELEGRAPH AVE.
SUITE 200
OAKLAND, CA 94612
T. 510.465.7010 | F. 510.465.8575
www.pyatok.com

THE UNITY COUNCIL
1900 FRUITVALE AVE
#2A
OAKLAND, CA 94601

EMERALD CITY ENGINEERS, INC
21705 Highway 99 Lynnwood, WA 98036 425-741-1200 tel / 1201 fax

2700 INTERNATIONAL
OAKLAND, CA 94601

STAMP:

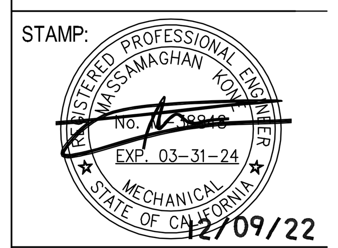

ISSUE SCHEDULE

100 SD	5/11/22
50 DD	7/15/22
100 DD	9/16/22
PRICING SET	11/11/22
PERMIT SET	12/09/22

REVISION SCHEDULE

NO.	ISSUE	DATE

JOB NUMBER:	2049-008
DRAWN BY:	TJP
CHECKED BY:	MK
ISSUE DATE:	12/09/2022
SCALE:	
TITLE:	

ENLARGED UNIT PLANS

SHEET:

M3.00

PRELIMINARY - Not for Construction -

© 2019 PYATOK ARCHITECTURE & URBAN DESIGN

4/22/2022 6:28:22 PM

COPYRIGHT 2022, EMERALD CITY ENGINEERS, INC.

TPIKE J:\2049-008 2700 INTERNATIONAL, OAKLAND, CA\DWG\M300 ENLARGED UNIT PLANS.DWG 12-01-2022 12:10

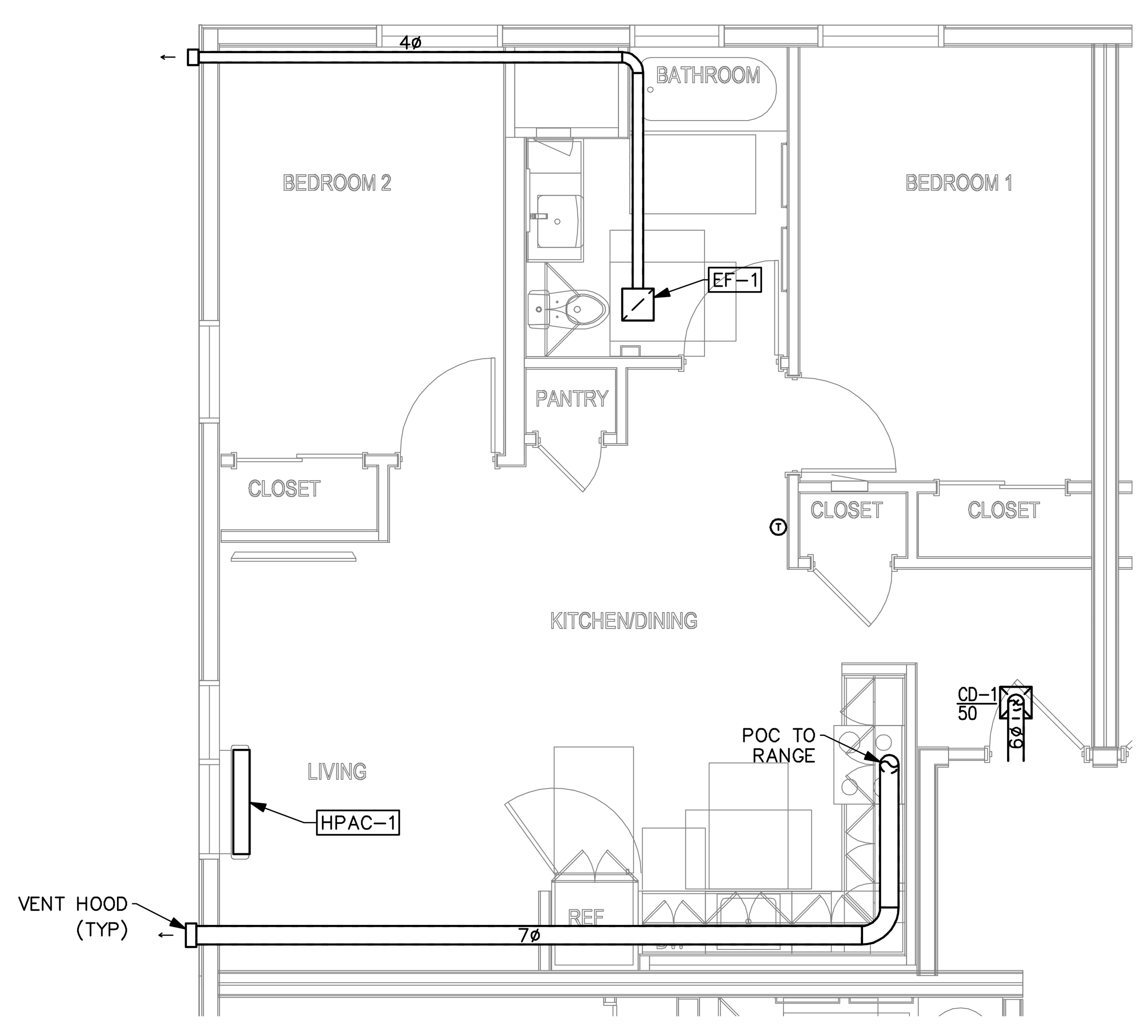

UNIT TYPE B1 – MOBILITY (1 / M3.01)
SCALE: 1/4" = 1'-0"

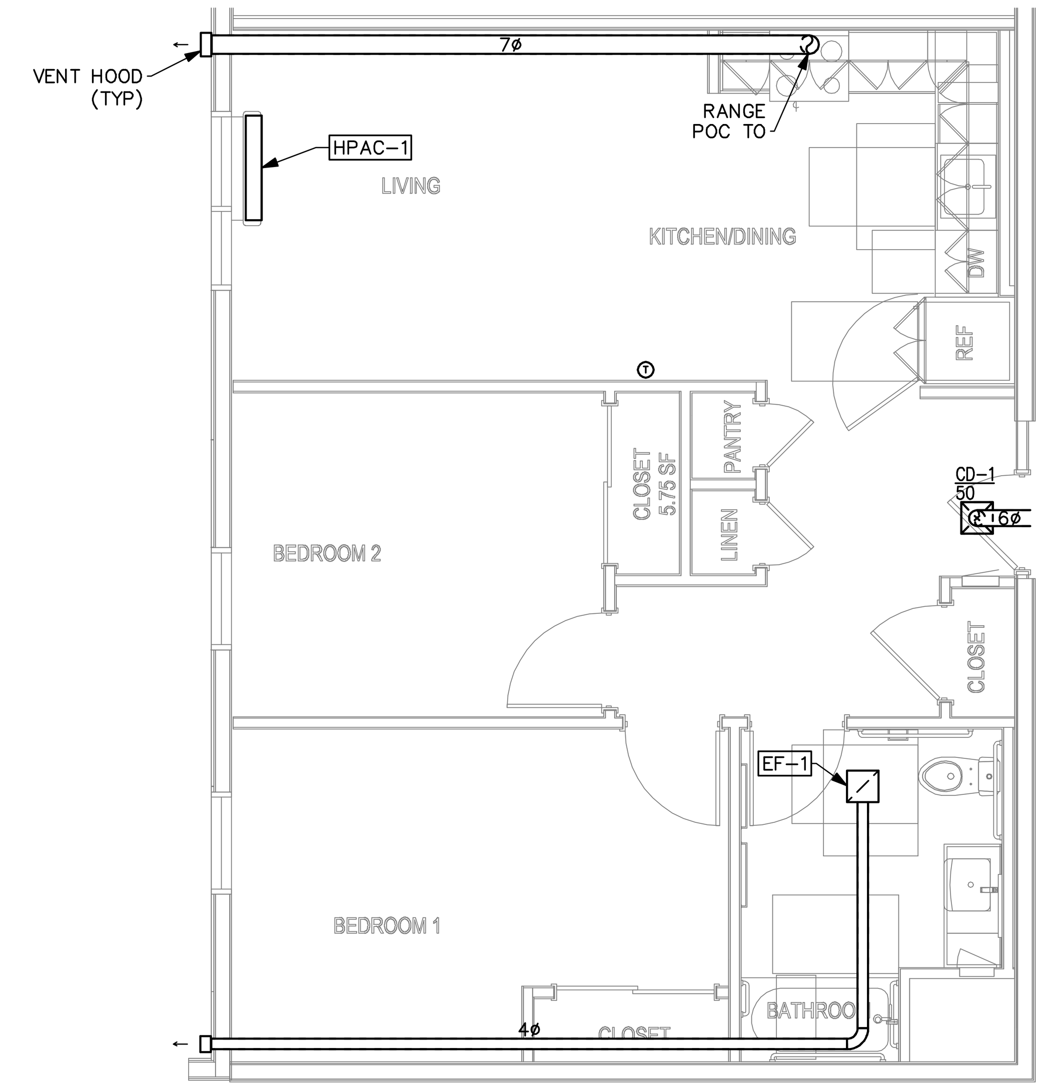

UNIT TYPE B2 – MOBILITY (2 / M3.01)
SCALE: 1/4" = 1'-0"

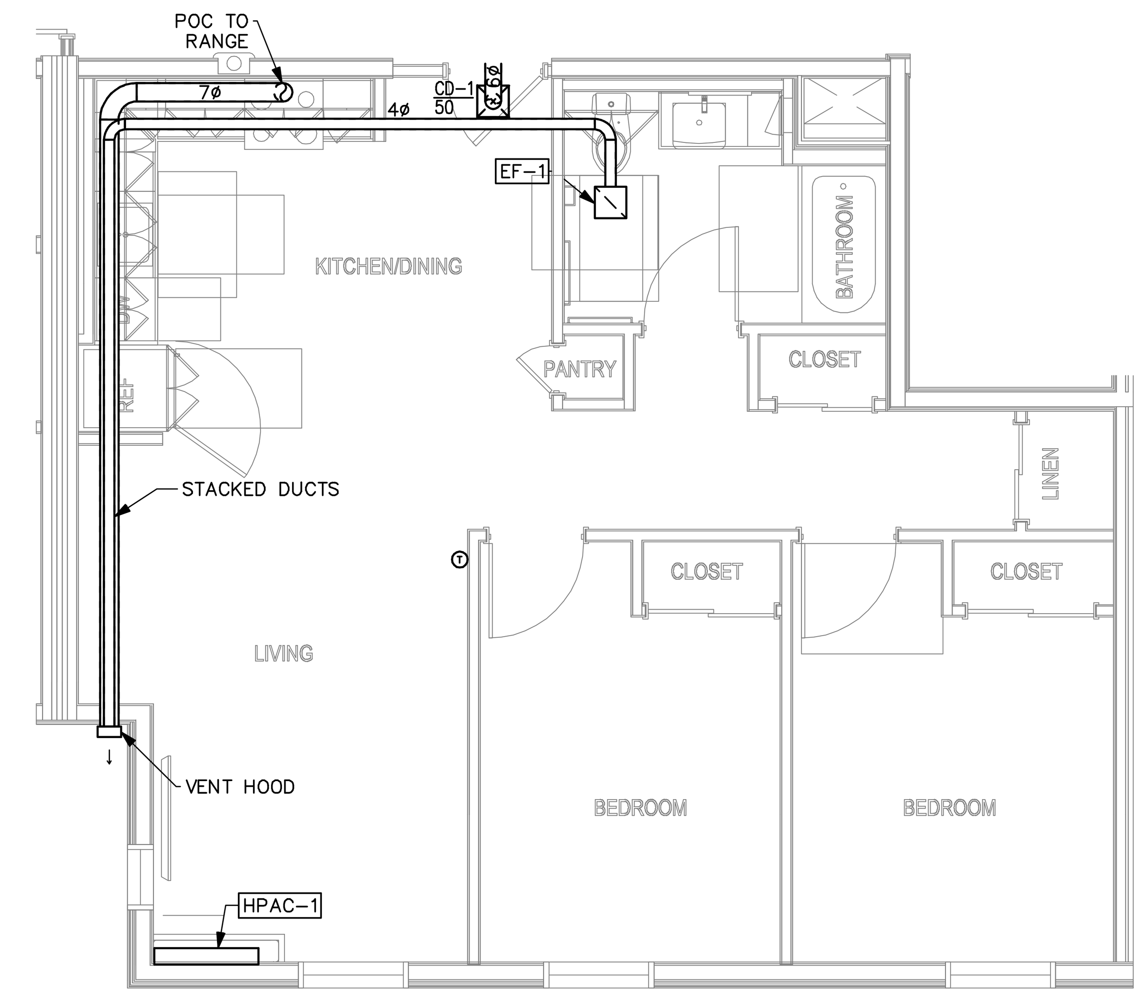

UNIT TYPE B3 (3 / M3.01)
SCALE: 1/4" = 1'-0"

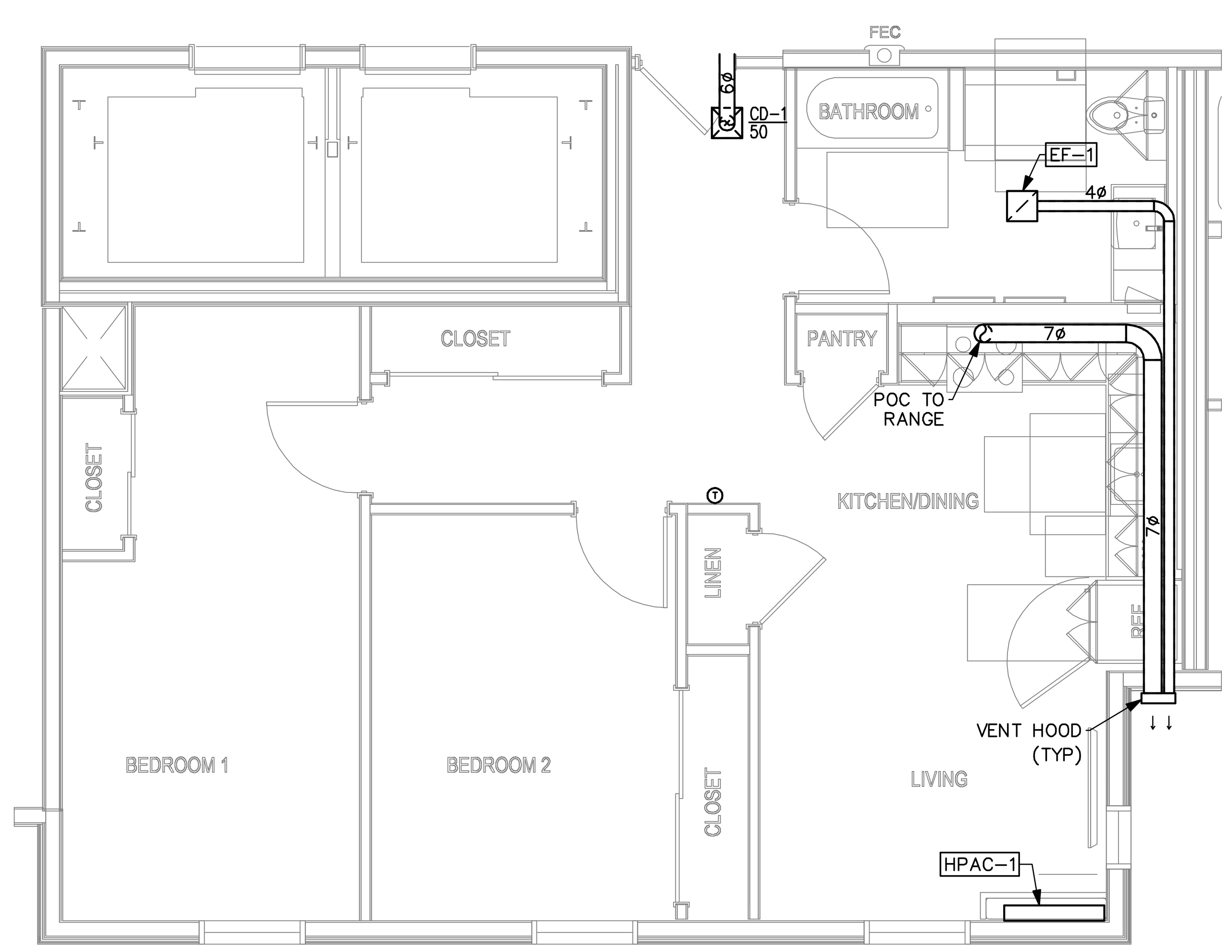

UNIT TYPE B4 (4 / M3.01)
SCALE: 1/4" = 1'-0"

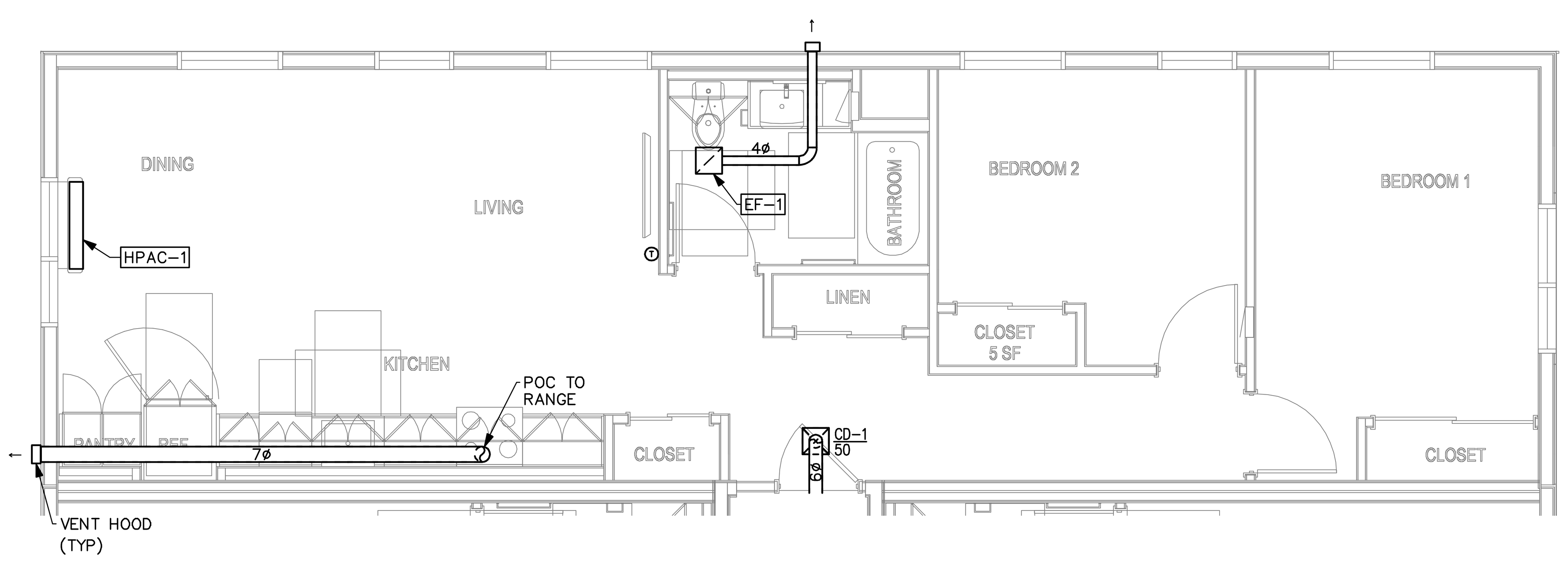

UNIT TYPE B5 (5 / M3.01)
SCALE: 1/4" = 1'-0"

PLAN NOTES

1. REFER TO OVERALL FLOOR PLANS FOR SLIGHT DUCT ROUTING VARIATIONS FOR EACH UNIT TYPE.
2. MOUNT THERMOSTAT 48" AFF TO TOP.

EXHAUST VENT CAPS

EXHAUST VENT CAPS FOR RESIDENTIAL UNIT DRYER, BATHROOM AND RANGE EXHAUST SHALL BE ALUMINUM VENT CAPS PAINTED TO MATCH ADJACENT EXTERIOR SURFACE. REVERSOMATIC MODEL ECA OR EQUAL. VENT HOODS SHOULD HAVE A 4" MINIMUM OPENING DEPTH FROM THE FACE OF THE WALL FOR PROPER OPERATION OF FANS. CONTRACTOR MAY PROVIDE SINGLE HOOD ENCLOSING MULTIPLE VENTS. REF DETAIL 5 ON M4.00.

PYATOK
1611 TELEGRAPH AVE.
SUITE 200
OAKLAND, CA 94612
T. 510.465.7010 | F. 510.465.8575
www.pyatok.com

THE UNITY COUNCIL
1900 FRUITVALE AVE
#2A
OAKLAND, CA 94601

EMERALD CITY ENGINEERS, INC
21705 Highway 99 Lynnwood, WA 98036 425-741-1200 tel / 1201 fax

2700 INTERNATIONAL
OAKLAND, CA 94601

STAMP:
MECHANICAL
EXP. 03-31-24
STATE OF CALIFORNIA
12/09/22

ISSUE SCHEDULE

100 SD	5/11/22
50 DD	7/15/22
100 DD	9/16/22
PRICING SET	11/11/22
PERMIT SET	12/09/22

REVISION SCHEDULE

NO.	ISSUE	DATE

JOB NUMBER:	2049-008
DRAWN BY:	TJP
CHECKED BY:	MK
ISSUE DATE:	12/09/2022
SCALE:	
TITLE:	

ENLARGED UNIT PLANS

SHEET:
M3.01

PRELIMINARY - Not for Construction -

© 2019 PYATOK ARCHITECTURE & URBAN DESIGN

COPYRIGHT 2022, EMERALD CITY ENGINEERS, INC.
TPKE J:\2049-008 2700 INTERNATIONAL, OAKLAND, CA\DWG\M301 ENLARGED UNIT PLANS.DWG 12-01-2022 12:09

4/22/2022 6:28:22 PM

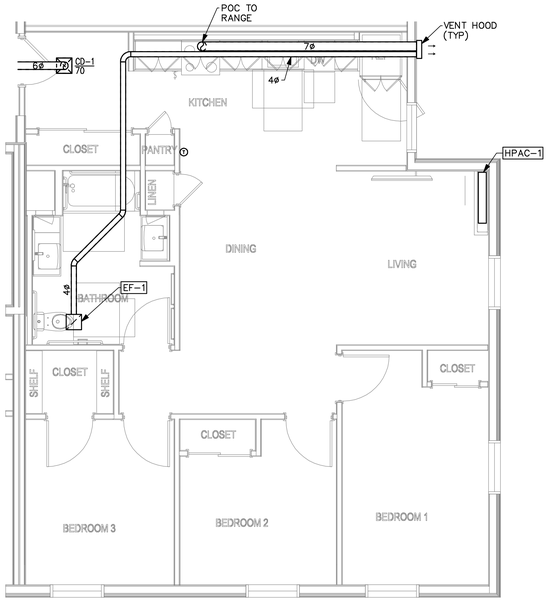

UNIT TYPE C1 – MOBILITY (1 / M3.02)

SCALE: 1/4" = 1'-0"

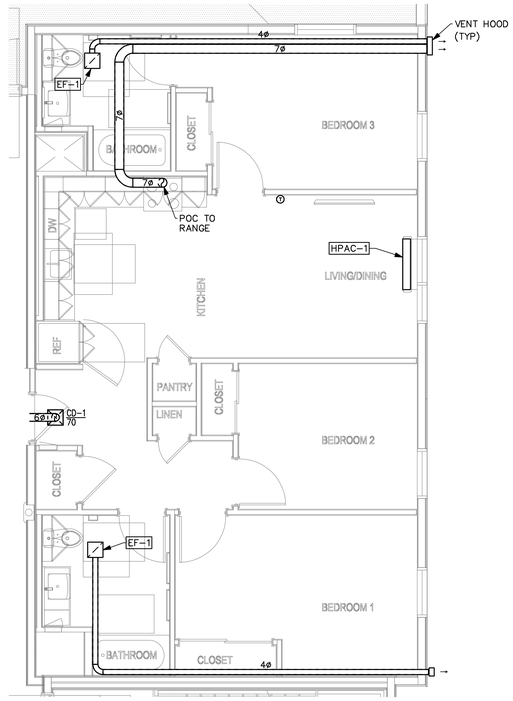

UNIT TYPE C2 (2 / M3.02)

SCALE: 1/4" = 1'-0"

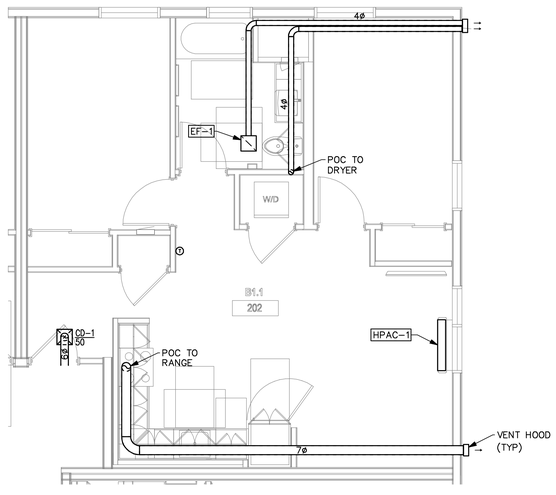

UNIT TYPE B1 – MANAGER'S (3 / M3.02)

SCALE: 1/4" = 1'-0"

PLAN NOTES

1. REFER TO OVERALL FLOOR PLANS FOR SLIGHT DUCT ROUTING VARIATIONS FOR EACH UNIT TYPE.
2. MOUNT THERMOSTAT 48" AFF TO TOP.

EXHAUST VENT CAPS

EXHAUST VENT CAPS FOR RESIDENTIAL UNIT DRYER, BATHROOM AND RANGE EXHAUST SHALL BE ALUMINUM VENT CAPS PAINTED TO MATCH ADJACENT EXTERIOR SURFACE. REVERSOMATIC MODEL ECA OR EQUAL VENT HOODS SHOULD HAVE A 4" MINIMUM OPENING DEPTH FROM THE FACE OF THE WALL FOR PROPER OPERATION OF FANS. CONTRACTOR MAY PROVIDE SINGLE HOOD ENCLOSING MULTIPLE VENTS. REF DETAIL 5 ON M4.00.

PYATOK
1611 TELEGRAPH AVE.
SUITE 200
OAKLAND, CA 94612
T. 510.465.7010 | F. 510.465.8575
www.pyatok.com

THE UNITY COUNCIL
1900 FRUITVALE AVE
#2A
OAKLAND, CA
94601

EMERALD CITY ENGINEERS, INC
21705 Highway 99 Lynnwood, WA
98036 425-741-1200 tel / 1201 fax

2700 INTERNATIONAL

OAKLAND, CA 94601

STAMP:

12/09/22

ISSUE SCHEDULE

100 SD	5/11/22
50 DD	7/15/22
100 DD	9/16/22
PRICING SET	11/11/22
PERMIT SET	12/09/22

REVISION SCHEDULE

NO.	ISSUE	DATE

JOB NUMBER:	2049-008
DRAWN BY:	TJP
CHECKED BY:	MK
ISSUE DATE:	12/09/2022
SCALE:	
TITLE:	

ENLARGED UNIT PLANS

SHEET:

M3.02

PRELIMINARY - Not for Construction -

© 2019 PYATOK ARCHITECTURE & URBAN DESIGN

4/22/2022 6:28:22 PM

COPYRIGHT 2022, EMERALD CITY ENGINEERS, INC.
T:\PKE 2\2049-008 2700 INTERNATIONAL, OAKLAND, CA\DWG\M302 ENLARGED UNIT PLANS.DWG 12-01-2022 12:09

NOTE:
VENT HOODS SHALL HAVE A 4" MINIMUM OPENING DEPTH
FROM THE FACE OF THE WALL FOR PROPER OPERATION OF FANS.
PROVIDE BIRD SCREEN AT BATH FAN AND KITCHEN EXHAUST OUTLETS.

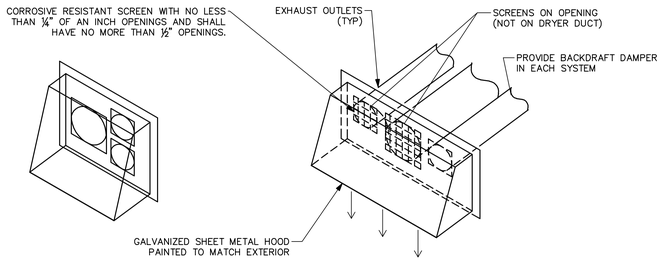

EXHAUST HOOD

DETAIL

SCALE: NONE

5
M4.00

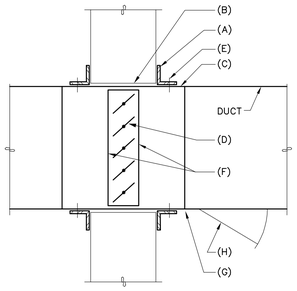

NOTES:
(A) RETAINING ANGLES, LAP OPENING 1" MINIMUM AND COVER CORNERS OF OPENING.
(B) CLEARANCE BETWEEN WALL AND SLEEVE BOTH DIMENSIONS.
(C) STEEL SLEEVE.
(D) APPROVED COMBINATION FIRE/SMOKE DAMPER.
(E) SECURE RETAINING ANGLES TO SLEEVE ONLY.
(F) SECURE DAMPER TO SLEEVE.
(G) CONNECT DUCT TO SLEEVE WITH BREAK–AWAY CONNECTION (TYP).
(H) ACCESS DOOR, SIZE TO MEET AHJ REQUIREMENTS (6x6 MINIMUM).

1. COMPLY WITH SMACNA FSRDIG AND MANUFACTURER'S INSTRUCTIONS.
2. DAMPER FREE AREA SHALL BE MINIMUM 90% OF AREA OF CONNECTING DUCT. INCREASE DAMPER SIZE AND PROVIDE TRANSITIONS TO CONNECTING DUCTS AS NECESSARY TO MEET THIS REQUIREMENT.
3. DAMPER SHALL BE PROVIDED WITH AN APPROVED MEANS OF ACCESS AND PERMANENTLY IDENTIFIED ON THE EXTERIOR, PER CMC 605.5.
4. FIRE DAMPERS SHALL BE INSTALLED IN ACCORDANCE WITH THE MANUFACTURE'S INSTALLATION INSTRUCTIONS AND SHALL BE AVAILABLE IF REQUESTED BY THE CITY INSPECTOR AT THE JOBSITE, PER CMC 605.2.

FIRE/SMOKE DAMPER NOTES:
1. LOCATION OF SMOKE DETECTOR: FULL–COVERAGE SYSTEM. SEE FIRE ALARM DRAWINGS.
2. SMOKE CONTROL NARRATIVE: SEE FIRE ALARM DRAWINGS.
3. SEQUENCE OF OPERATION:
   A. DAMPER NORMALLY CLOSED, HELD OPEN BY POWER.
   B. IF SMOKE OR EXCESS HEAT IS DETECTED IN THE AIR DUCT, DAMPER SHALL CLOSE AND RTU/FAN SHALL SHUT DOWN.
   C. IF POWER IS INTERRUPTED, DAMPER SHALL FAIL CLOSED.
4. DETECTOR BY OTHERS. SEE FIRE ALARM DRAWINGS.
5. FSD SHALL BE GREENHECK MODEL FSD–211 UL 555S GRILLE–ACCESS COMBINATION FIRE/SMOKE DAMPER WITH ELECTRIC FUSE LINK ACTUATOR.
6. OPERATING TEMPERATURE OF ACTUATOR SHALL BE 165 DEGREES F.
7. OVERRIDE SWITCH: NOT APPLICABLE – NO SECTION 909 SMOKE CONTROL SYSTEM IN THIS PROJECT.
8. DAMPER ACTUATOR SHALL BE INTERLOCKED WITH RTU/FAN TO CLOSE DAMPER WHEN FAN SHUTS DOWN.
9. DAMPER SHALL BE NORMALLY CLOSED, AND SHALL FAIL CLOSED WHEN POWER IS CUT.

COMBINATION FIRE/SMOKE DAMPER INSTALLATION

DETAIL

SCALE: NONE

1
M4.00

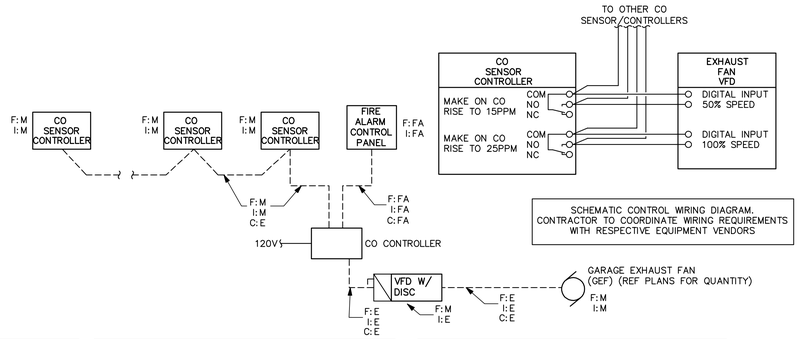

SCHEMATIC CONTROL WIRING DIAGRAM. CONTRACTOR TO COORDINATE WIRING REQUIREMENTS WITH RESPECTIVE EQUIPMENT VENDORS

ALL PARKING GARAGE CARBON MONOXIDE SENSORS SHALL BE TESTED BY THE INSTALLATION VENDOR OR AN APPROVED INDEPENDANT 3RD PARTY INSPECTOR

NOTES:

SCOPE OF WORK: ELECTRICAL CONTRACTOR SHALL PROVIDE CONDUIT FOR CO SYSTEM. ROUTE CONDUIT WITHIN CONCRETE SLAB WHERE POSSIBLE. CONFIRM ALL LOCATION AND CONDUIT PATHWAY WITH MECHANICAL.

WIRING DIAGRAM FOR GARAGE EXHAUST FANS. CONTRACTORS TO COORDINATE ALL REQUIRED WORK.

REFER TO MECHANICAL PLANS FOR SEQUENCE OF OPERATION FOR FANS + PPM SETTINGS

REFER TO MECHANICAL PLANS FOR CO SENSOR/CONTROLLER LOCATIONS.

LEGEND			
F: _	FURNISHED BY	E	ELECTRICAL CONTRACTOR
I: _	INSTALLED BY	M	MECHANICAL CONTRACTOR
C: _	CONDUIT BY	FA	FIRE ALARM CONTRACTOR
		-----	CONTROL WIRING

CARBON MONOXIDE (CO) SENSOR CONTROLLER

PROVIDE COMBINATION CO SENSOR & CONTROLLER WITH LOW AND HIGH ADJUSTABLE ALARM POINT RELAYS.
–120VAC POWER SOURCE.
–DRY CONTACT ALARM RELAYS RATED FOR 5A @ 120V
–ADJUSTABLE TIME DELAYS AND ACTIVATION SETPOINTS
–ELECTROCHEMICAL CO SENSOR MOUNTED ON DEVICE
–PROVIDE AIRTEST TECHNOLOGIES #CT–1000 OR EQUIVALENT
–SET TIME DELAY TO 4 MINUTES

GARAGE EXHAUST FAN WIRING DIAGRAM

DETAIL

SCALE: NONE

6
M4.00

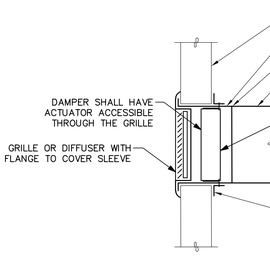

NOTES:
(A) RETAINING ANGLES, LAP OPENING 1" MINIMUM AND COVER CORNERS OF OPENING.
(B) CLEARANCE BETWEEN WALL AND SLEEVE.
(C) STEEL SLEEVE.
(D) APPROVED FIRE DAMPER (CURTAIN OR BLADE TYPE).
(E) SECURE RETAINING ANGLES TO SLEEVE ONLY.
(F) SECURE DAMPER TO SLEEVE.
(G) CONNECT DUCT TO SLEEVE WITH BREAK–AWAY CONNECTION (TYP).
(H) ACCESS DOOR, SIZE TO MEET AHJ REQUIREMENTS (6x6 MINIMUM).

1. COMPLY WITH SMACNA FSRDIG AND MANUFACTURER'S INSTRUCTIONS.
2. DAMPER FREE AREA SHALL BE MINIMUM 90% OF AREA OF CONNECTING DUCT. INCREASE DAMPER SIZE AND PROVIDE TRANSITIONS TO CONNECTING DUCTS AS NECESSARY TO MEET THIS REQUIREMENT.

FIRE DAMPER INSTALLATION

DETAIL

SCALE: NONE

2
M4.00

FIRE/SMOKE DAMPER NOTES:
1. LOCATION OF SMOKE DETECTOR: FULL–COVERAGE SYSTEM. SEE FIRE ALARM DRAWINGS.
2. SMOKE CONTROL NARRATIVE: SEE FIRE ALARM DRAWINGS.
3. SEQUENCE OF OPERATION:
   A. DAMPER NORMALLY CLOSED, HELD OPEN BY POWER.
   B. IF SMOKE OR EXCESS HEAT IS DETECTED IN THE AIR DUCT, DAMPER SHALL CLOSE AND RTU/FAN SHALL SHUT DOWN.
   C. IF POWER IS INTERRUPTED, DAMPER SHALL FAIL CLOSED.
4. DETECTOR BY OTHERS. SEE FIRE ALARM DRAWINGS.
5. FSD SHALL BE GREENHECK MODEL OFSD–211 UL 555S GRILLE–ACCESS COMBINATION FIRE/SMOKE DAMPER WITH ELECTRIC FUSE LINK ACTUATOR.
6. OPERATING TEMPERATURE OF ACTUATOR SHALL BE 165 DEGREES F.
7. OVERRIDE SWITCH: NOT APPLICABLE – NO SECTION 909 SMOKE CONTROL SYSTEM IN THIS PROJECT.
8. DAMPER ACTUATOR SHALL BE INTERLOCKED WITH RTU/FAN TO CLOSE DAMPER WHEN FAN SHUTS DOWN.
9. DAMPER SHALL BE NORMALLY CLOSED, AND SHALL FAIL CLOSED WHEN POWER IS CUT.

DAMPER INSTALLATION AT GRILLE OR DIFFUSER

DETAIL

SCALE: NONE

3
M4.00

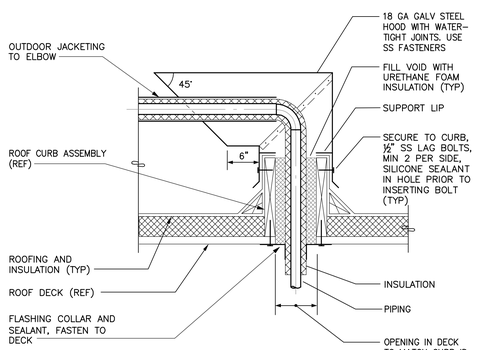

PIPE PENETRATION THROUGH ROOF

DETAIL

SCALE: NONE

7
M4.00

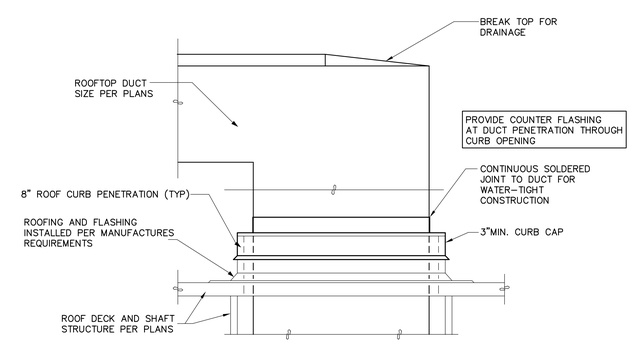

DUCT PENETRATION THROUGH ROOF

DETAIL

SCALE: NONE

4
M4.00

PYATOK
1611 TELEGRAPH AVE.
SUITE 200
OAKLAND, CA 94612
T. 510.465.7010 | F. 510.465.8575
www.pyatok.com

THE UNITY COUNCIL
1900 FRUITVALE AVE
#2A
OAKLAND, CA 94601

EMERALD CITY ENGINEERS, INC
21705 Highway 99 Lynnwood, WA
98036 425-741-1200 tel / 1201 fax

2700 INTERNATIONAL
OAKLAND, CA 94601

STAMP:
REGISTERED PROFESSIONAL ENGINEER
MASSAMAGHAN KOUROSH
No. 24618
EXP. 03–31–24
MECHANICAL
STATE OF CALIFORNIA
12/09/22

ISSUE SCHEDULE

100 SD	5/11/22
50 DD	7/15/22
100 DD	9/16/22
PRICING SET	11/11/22
PERMIT SET	12/09/22

REVISION SCHEDULE

NO.	ISSUE	DATE

JOB NUMBER:	2049-008
DRAWN BY:	TJP
CHECKED BY:	MK
ISSUE DATE:	12/09/2022
SCALE:	
TITLE:	DETAILS & DIAGRAMS

SHEET:
M4.00

PRELIMINARY - Not for Construction -

© 2019 PYATOK ARCHITECTURE & URBAN DESIGN

4/22/2022 6:28:22 PM

COPYRIGHT 2022, EMERALD CITY ENGINEERS, INC.

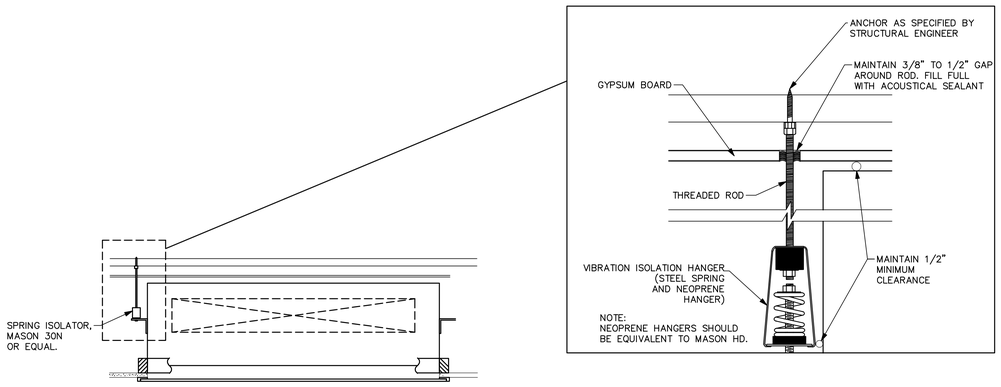

FAN COIL UNIT MOUNTING

DETAIL

SCALE: NONE

4 M4.01

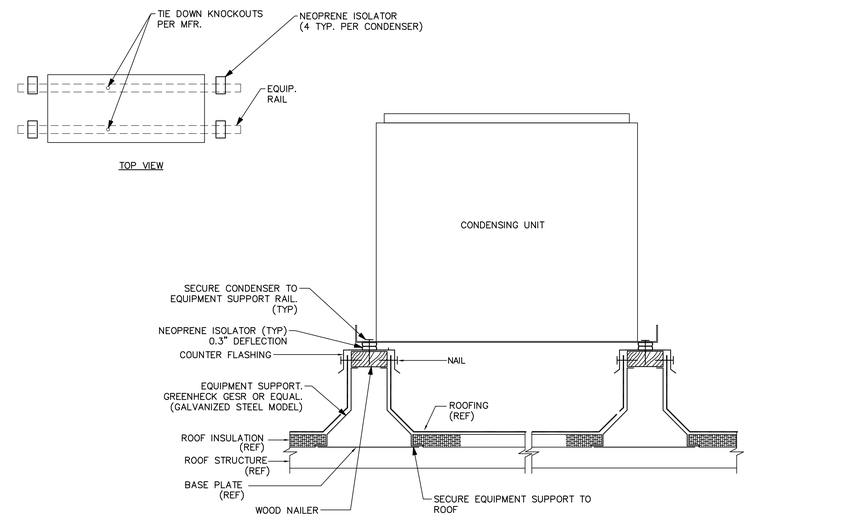

ROOFTOP CONDENSING UNIT MOUNTING DETAIL

DETAIL

SCALE: NONE

1 M4.01

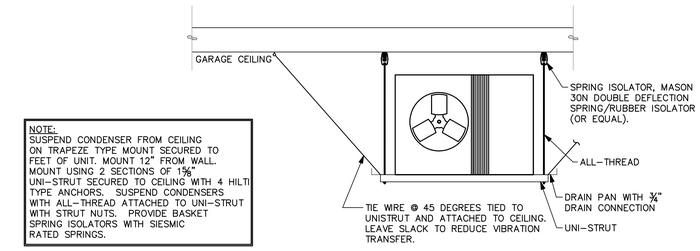

GARAGE HEAT PUMP MOUNTING

DETAIL

SCALE: NONE

2 M4.01

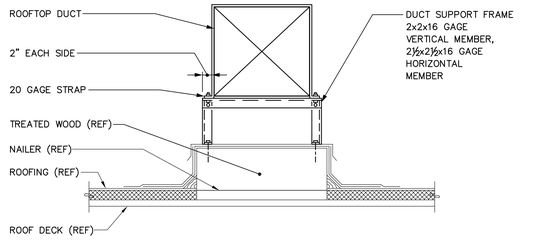

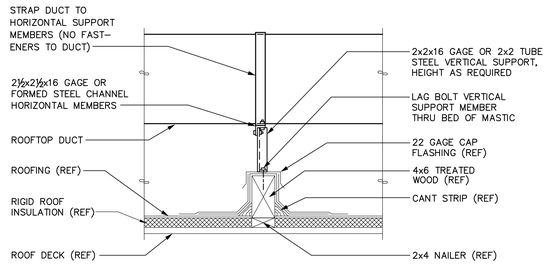

ROOFTOP DUCT SUPPORT

DETAIL

5 M4.01

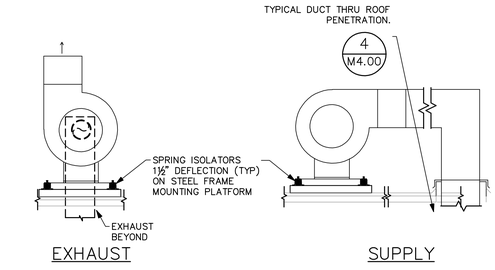

NOTES:
1. PROVIDE FLEXIBLE DUCT CONNECTIONS TO FANS.

UTILITY FAN MOUNTING

DETAIL

SCALE: NONE

3 M4.01

PYATOK
1611 TELEGRAPH AVE.
SUITE 200
OAKLAND, CA 94612
T. 510.465.7010 | F. 510.465.8575
www.pyatok.com

THE UNITY COUNCIL
1900 FRUITVALE AVE
#2A
OAKLAND, CA 94601

EMERALD CITY ENGINEERS, INC
21705 Highway 99 Lynnwood, WA
98036 425-741-1200 tel / 1201 fax

2700 INTERNATIONAL

OAKLAND, CA 94601

STAMP: REGISTERED PROFESSIONAL ENGINEER MARK MAGHAN NO. M-28419 EXP. 03-31-24 MECHANICAL STATE OF CALIFORNIA

12/09/22

ISSUE SCHEDULE

100 SD	5/11/22
50 DD	7/15/22
100 DD	9/16/22
PRICING SET	11/11/22
PERMIT SET	12/09/22

REVISION SCHEDULE

NO.	ISSUE	DATE

JOB NUMBER:	2049-008
DRAWN BY:	TJP
CHECKED BY:	MK
ISSUE DATE:	12/09/2022
SCALE:	
TITLE:	DETAILS & DIAGRAMS
SHEET:	M4.01

PRELIMINARY - Not for Construction -

© 2019 PYATOK ARCHITECTURE & URBAN DESIGN

4/22/2022 6:28:22 PM

COPYRIGHT 2022, EMERALD CITY ENGINEERS, INC.

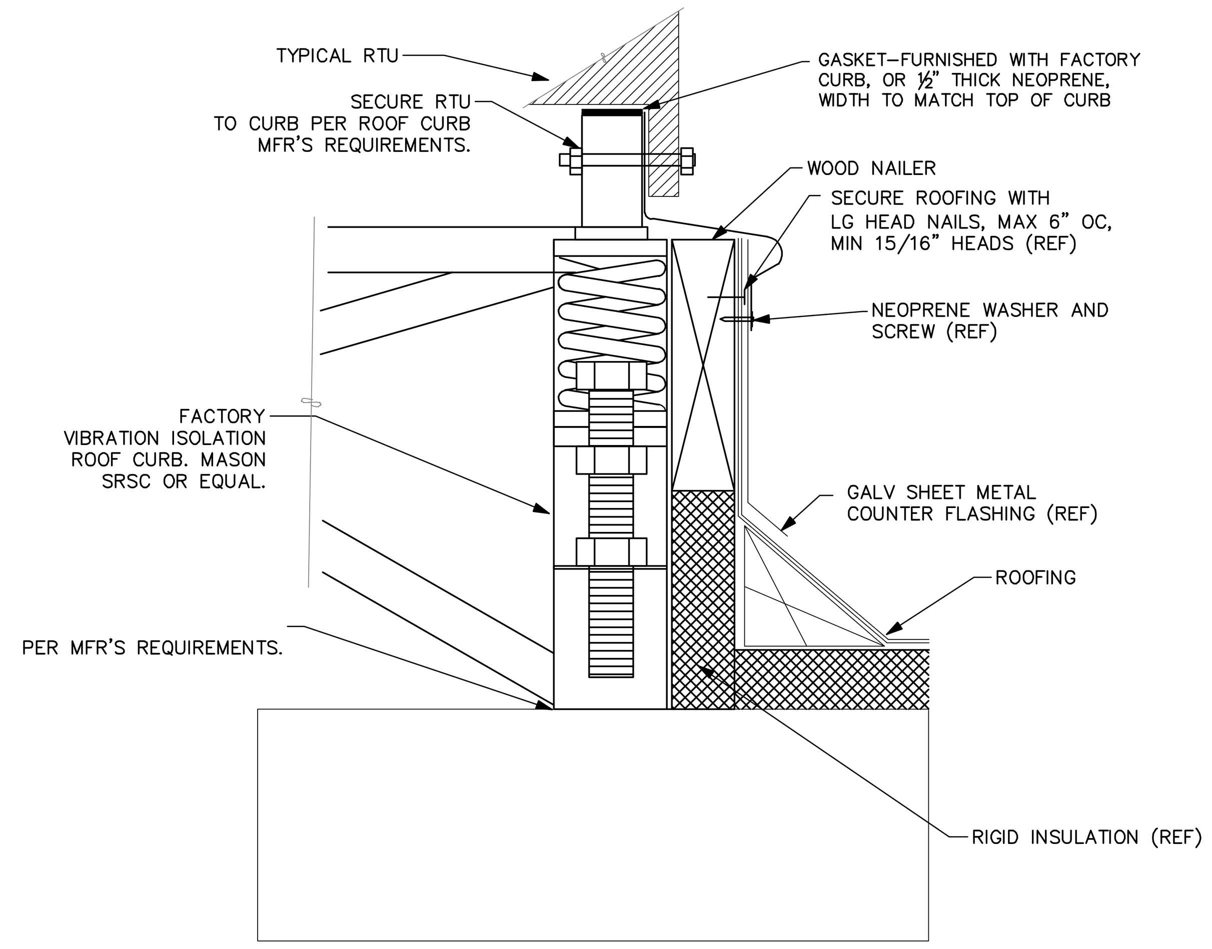

ROOFTOP UNITARY HVAC UNIT FACTORY CURB

DETAIL 3 / M4.02

SCALE: NONE

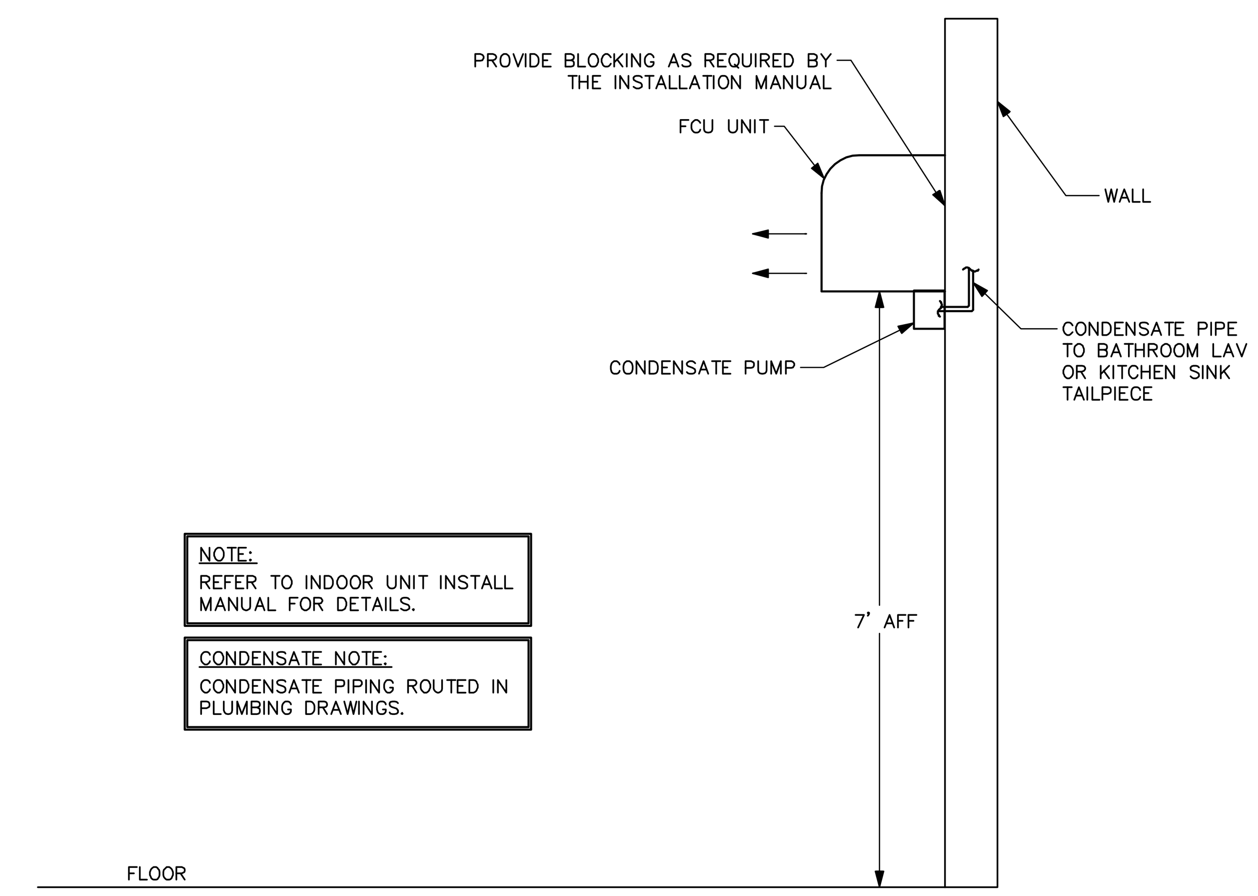

WALL MOUNTED FAN COIL UNIT MOUNTING

DETAIL 1 / M4.02

SCALE: NONE

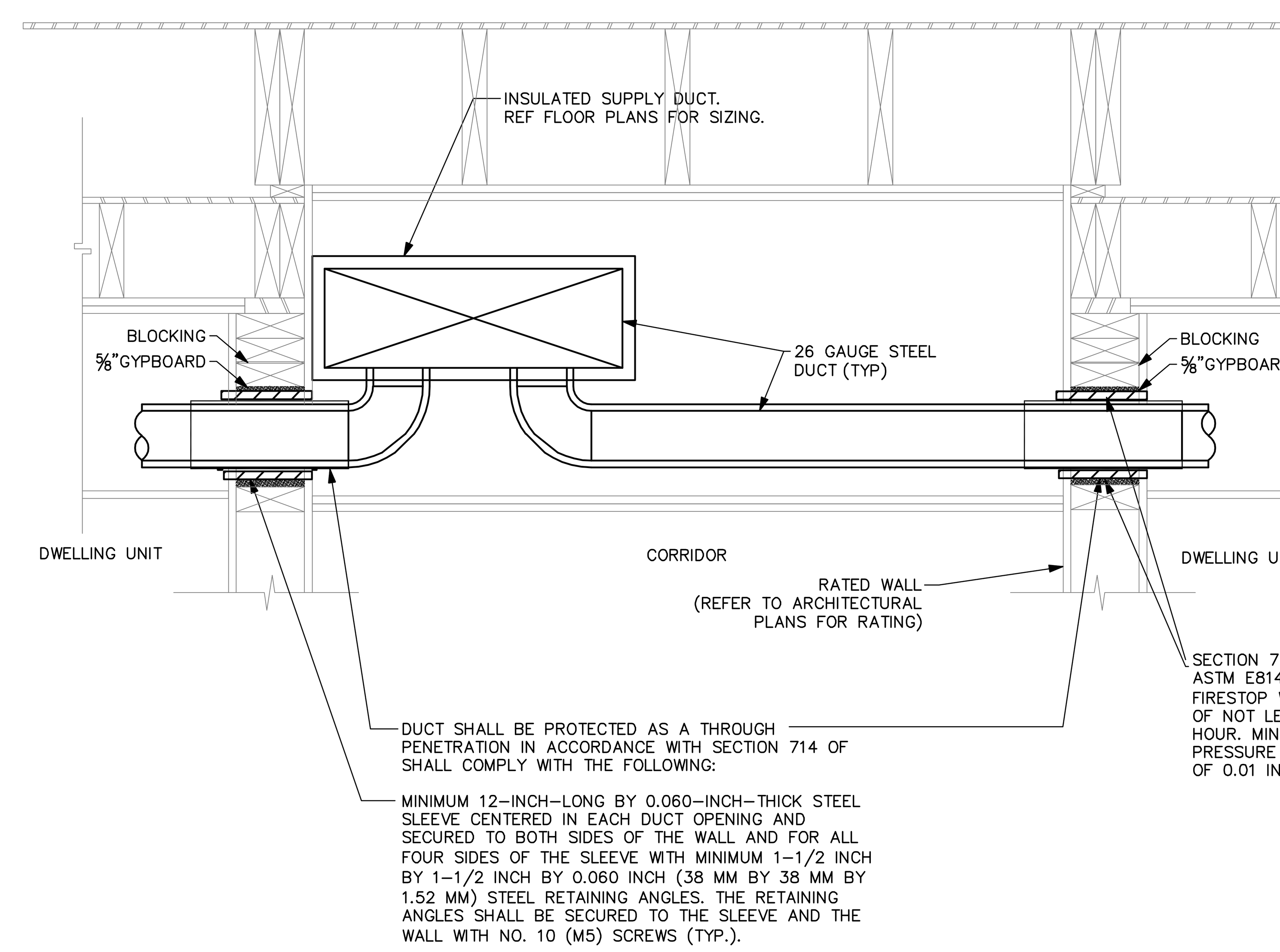

NOTE:
PER 2019 CBC, SECTION 717.5.4, EXCEPTION 1&2, FIRE DAMPERS ARE NOT REQUIRED FOR GROUP R OCCUPANCIES IN CORRIDOR PENETRATIONS WHERE THE DUCT IS CONSTRUCTED OF STEEL NOT LESS THAN 0.019 INCH IN THICKNESS, THERE ARE NO OPENINGS SERVING THE CORRIDOR, AND PROVIDED WITH A A MINIMUM 12–INCH–LONG (305 MM) BY 0.060–INCH–THICK (1.52 MM) STEEL SLEEVE CENTERED IN EACH DUCT OPENING. THE SLEEVE SHALL BE SECURED TO BOTH SIDES OF THE WALL AND FOR ALL FOUR SIDES OF THE SLEEVE WITH MINIMUM 11/2–INCH BY 11/2–INCH BY 0.060–INCH (38 MM BY 38 MM BY 1.52 MM) STEEL RETAINING ANGLES. THE RETAINING ANGLES SHALL BE SECURED TO THE SLEEVE AND THE WALL WITH NO. 10 (M5) SCREWS. THE ANNULAR SPACE BETWEEN THE STEEL SLEEVE AND THE WALL OPENING SHALL BE FILLED WITH MINERAL WOOL BATTING ON ALL SIDES.

PER 2019 CBC, SECTION 717.5.4.1, EXCEPTION 2, SMOKE DAMPERS ARE NOT REQUIRED FOR GROUP R OCCUPANCIES IN CORRIDOR PENETRATIONS WHERE THE DUCT IS CONSTRUCTED OF STEEL NOT LESS THAN 0.019 INCH IN THICKNESS AND THERE ARE NO OPENINGS SERVING THE CORRIDOR.

CORRIDOR SUPPLY DUCT

DETAIL 2 / M4.02

SCALE: NONE

4/22/2022 6:28:22 PM

COPYRIGHT 2022, EMERALD CITY ENGINEERS, INC.

PYATOK
1611 TELEGRAPH AVE.
SUITE 200
OAKLAND, CA 94612
T. 510.465.7010 | F. 510.465.8575
www.pyatok.com

THE UNITY COUNCIL
1900 FRUITVALE AVE
#2A
OAKLAND, CA 94601

EMERALD CITY ENGINEERS, INC
21705 Highway 99 Lynnwood, WA 98036 425-741-1200 tel / 1201 fax

2700 INTERNATIONAL
OAKLAND, CA 94601

STAMP:
12/09/22

ISSUE SCHEDULE

100 SD	5/11/22
50 DD	7/15/22
100 DD	9/16/22
PRICING SET	11/11/22
PERMIT SET	12/09/22

REVISION SCHEDULE

NO.	ISSUE	DATE

JOB NUMBER:	2049-008
DRAWN BY:	TJP
CHECKED BY:	MK
ISSUE DATE:	12/09/2022
SCALE:	
TITLE:	

DETAILS & DIAGRAMS

SHEET:

M4.02

PRELIMINARY - Not for Construction -

© 2019 PYATOK ARCHITECTURE & URBAN DESIGN

LEGEND

ACU	AIR CONDITIONING UNIT
AFF	ABOVE FINISHED FLOOR
AHJ	AUTHORITY HAVING JURISDICTION
AHU	AIR HANDLING UNIT
BDD	BACKDRAFT DAMPER
BHP	BRAKE HORSEPOWER
BTUH	BRITISH THERMAL UNIT PER HOUR
C	COMMON
CAP	CAPACITY
CC	COOLING COIL
CD	CEILING DIFFUSER
CFM	CUBIC FEET PER MINUTE
CLG	CEILING, COOLING
CO	CLEANOUT
COMB	COMBUSTION
CONT	CONTINUE, CONTROL
CONTR	CONTRACTOR
COP	COEFFICIENT OF PERFORMANCE
COTG	CLEANOUT TO GRADE
CWS	CHILLED WATER SUPPLY
CWR	CHILLED WATER RETURN
D	DIAMETER
DB	DRY BULB, DECIBEL
DEG	DEGREE
DIM	DIMENSION
DISCH	DISCHARGE
DN	DOWN
EA	EXHAUST AIR
EAT	ENTERING AIR TEMPERATURE
EER	ENERGY EFFICIENCY RATIO
EF	EXHAUST FAN
EFF	EFFICIENCY
EG	EXHAUST GRILLE, ENGINE GENERATOR
ELEC	ELECTRIC
EQUIV	EQUIVALENT
ESP	EXTERNAL STATIC PRESSURE
EXH	EXHAUST
EXT	EXTERIOR, EXTERNAL
F	FAHRENHEIT
FD	FIRE DAMPER
FCU	FAN COIL UNIT
FLR	FLOOR
FPM	FEET PER MINUTE
FPS	FEET PER SECOND
FSD	FIRE/SMOKE DAMPER
G	GAS
GRD	GRILLES, REGISTERS, AND DIFFUSERS
GWB	GYPSUM WALLBOARD
HORIZ	HORIZONTAL
HP	HORSEPOWER, HEAT PUMP
HRU	HEAT RECOVERY UNIT
HVAC	HEATING, VENTILATING, AND AIR CONDITIONING
HVU	HEATING AND VENTILATION UNIT
HWR	HIGH WALL RETURN, HOT WATER RETURN
HWS	HIGH WALL SUPPLY, HOT WATER SUPPLY
HX	HEAT EXCHANGER
ID	INDIRECT DRAIN, INSIDE DIAMETER
IN	INCH
KW	KILOWATT
L	LONG, LENGTH
LB	POUND
LWR	LOW WALL RETURN
LWS	LOW WALL SUPPLY
MBH	THOUSAND BTU PER HOUR
MECH	MECHANICAL
MCA	MINIMUM CIRCUIT AMPACITY
MOCP	MAXIMUM OVER CURRENT PROTECTION
MTD	MOUNTED
OSA	OUTDOOR AIR
OBD	OPPOSED BLADE DAMPER
OD	OUTSIDE DIMENSION OR DIAMETER
OPNG	OPENING
P	PUMP
PD	PUMPED DRAIN, PRESSURE DROP
PW	PUMPED WASTE
POC	POINT OF CONNECTION
PRV	PRESSURE REDUCING VALVE
PSIG	POUNDS PER SQUARE INCH GAUGE
RA	RETURN AIR
REF	REFERENCE
RF	RELIEF FAN
RG	RETURN GRILLE
RPM	REVOLUTIONS PER MINUTE
SA	SUPPLY AIR
SCH	SCHEDULE
SF	SUPPLY FAN, SQUARE FOOT
SENS	SENSIBLE
SG	SUPPLY GRILLE
SMACNA	SHEET METAL AND AIR CONDITIONING CONTRACTORS NATIONAL ASSOCIATION
SO	SCREENED OPENING
SP	STATIC PRESSURE
SS	STAINLESS STEEL, SANITARY SEWER
SQ	SQUARE
TP	TRAP PRIMER
TG	TRANSFER GRILLE
TYP	TYPICAL
UH	UNIT HEATER
UON	UNLESS OTHERWISE NOTED
V	VENT
VENT	VENTILATION, VENTILATOR
VTR	VENT THRU ROOF
W	WASTE, WATT, WIDE
WB	WET BULB (TEMPERATURE)

EQUIPMENT

Symbol	Description
EF-1	TYPICAL EQUIPMENT DESIGNATION (EXHAUST FAN SHOWN)

GENERAL

Symbol	Description
	ARCHITECTURAL BACKGROUND (THIN LINE)
	NEW MECHANICAL WORK (HEAVY LINE)
	MATCHLINE OR PROPERTY LINE

SECTION IDENTIFICATION (DETAIL SIMILAR)

Symbol	Description
A, M-3, M-3	INDICATES DIRECTION OF CUTTING PLANE
	LETTER INDICATES SECTION (NO. INDICATES DETAIL)
	SHEET # WHERE SECTION IS DRAWN
	SHEET # WHERE SECTION IS TAKEN

PIPING

Symbol	Description
CD	CONDENSATE DRAINAGE
G	NATURAL GAS – STANDARD PRESSURE
MPG	NATURAL GAS – MEDIUM PRESSURE
	WASTE (W)
PW	PUMPED WASTE (PW)
RL	RAIN LEADER (RL)
CRL	COMBINED RAIN LEADER (CRL)
OL	OVERFLOW RAIN LEADER (OL)
PD	PUMPED DRAIN (PD)
	VENT (V)
	COLD WATER (CW)
	HOT WATER, POTABLE, 120°F
140F	HOT WATER, POTABLE, TEMPERATURE OTHER THAN 120°F
	HOT WATER CIRCULATING (HWC), POTABLE, 120°F
140F	HOT WATER CIRCULATING (HWC), POTABLE, TEMPERATURE OTHER THAN 120°F
FOF	FUEL OIL FILL
FOS	FUEL OIL SUPPLY
FOR	FUEL OIL RETURN
FOV	FUEL OIL VENT
RV	RELIEF VENT
IRR	IRRIGATION
TP	TRAP PRIMER (TP)
	PIPE CAP
	PIPE PLUG
	UNION
	FLANGE
	GATE VALVE OR BALL VALVE
	BALL VALVE
	PRESSURE REDUCING VALVE (PRV)
	BREAK IN PIPING OR DUCTWORK
	CHECK VALVE
	BALANCING/MEASUING VALVE
ID	INDIRECT DRAIN, PIPE TO DRAIN
	GLOBE VALVE
	BUTTERFLY VALVE
	WYE STRAINER
	WYE STRAINER WITH CAPPED HOSE END BLOWDOWN VALVE
	AUTOMATIC CONTROL VALVE, 2-WAY
	AUTOMATIC CONTROL VALVE, 3-WAY
ID	RELIEF VALVE
RPBP	REDUCED PRESSURE BACKFLOW PREVENTER
DCVA	DOUBLE CHECK VALVE ASSEMBLY
	FLOOR DRAIN
	HOSE BIBB
	PIPE ALIGNMENT GUIDE
	FLEXIBLE CONNECTION IN PIPING
PS	PIPE SUPPORT
A	PIPE ANCHOR
	PRESSURE GAGE
	THERMOMETER
P/T	PRESSURE / TEMPERATURE TEST PORT
	VALVE STATION OR ASSEMBLY
	PUMP
##	WASTE/VENT RISER CALLOUT
*	CW/HW RISER CALLOUT
*	CONDENSATE RISER CALLOUT

GENERAL NOTES

GENERAL NOTES – MECHANICAL

1. REFERENCE TO RELATED WORK: "REF" INDICATIONS DENOTE WORK COVERED ELSEWHERE (ARCHITECTURAL, STRUCTURAL, CIVIL, ELECTRICAL, LANDSCAPE, OR KITCHEN), OR ITEM BASED ON A SPECIFIC MANUFACTURER'S DIMENSIONS (VERIFY).
2. ELECTRICAL CHARACTERISTICS: REFER TO ELECTRICAL DRAWINGS FOR ELECTRICAL CHARACTERISTICS (VOLTAGES, ETC. OF MECHANICAL EQUIPMENT, UNLESS OTHERWISE INDICATED.
3. CODES: COMPLETE INSTALLATION OF THE MECHANICAL SYSTEM SHALL BE PER THE APPLICABLE BUILDING, MECHANICAL, ENERGY, PLUMBING, FIRE, AND HEALTH CODES AND REGULATIONS AS ADOPTED BY THE LOCAL AHJ.
4. PREPARE AND SUBMIT FOR REVIEW A SHOP DRAWING BASED ON FINAL STRUCTURAL SHOP DRAWINGS FOR LOCATING AND ROUTING ALL DUCTWORK, DAMPERS, EQUIPMENT, PIPING, ETC.
   A. COORDINATE FLOOR AND BEAM PENETRATIONS WITH STRUCTURAL.
   B. COORDINATE FINAL LOCATION AND ROUTING WITH CEILING, LIGHTS, WALLS, FIRE SPRINKLER PIPING, AND OTHER TRADES WORK.
   C. INCLUDE ADDITIONAL OFFSETS, ELBOWS, ROUTING, EQUIVALENT DUCT SIZING EXCHANGE, RELOCATING, ETC. AS REQUIRED FOR A COMPLETE OPERATING MECHANICAL SYSTEM.
   D. PROVIDE SHOP DRAWINGS AT NO ADDITIONAL COST TO THE OWNER.
5. MECHANICAL CONTRACTOR SHALL LOCATE AND COORDINATE EXACT LOCATION OF ALL MECHANICAL EQUIPMENT WITHIN THE STRUCTURE.
6. ACCESS DOORS: COORDINATE WITH ARCHITECT AND LOCATE ALL ACCESS DOORS ON SHOP DRAWINGS PRIOR TO BEGINNING OF CONSTRUCTION. ACCESS DOORS IN FIRE RATED STRUCTURE SHALL BE FIRE RATED. VERIFY ACCESS DOOR LOCATIONS WITH GENERAL CONTRACTOR PRIOR TO BIDDING.
7. RATED PENETRATION: DUCT PENETRATIONS THROUGH RATED ENCLOSURES SHALL BE FIRE/SMOKE DAMPERED PER THE LATEST EDITION OF THE UNDERWRITERS LABORATORIES(UL) FIRE RESISTANCE WITH HOURLY RATINGS FOR THROUGH-PENETRATION FIRE STOPS SYSTEM VOLUME #2, OR SHALL BE INSTALLED IN STRICT ACCORDANCE WITH THE MANUFACTURER'S UL LISTINGS (3M OR EQUIVALENT). DETERMINE REQUIREMENTS WITH GENERAL CONTRACTOR PRIOR TO BID.
8. ROOF PENETRATIONS: SEE ARCHITECTURAL DRAWINGS FOR ROOF CAP, ROOF CURB, ROOF DRAIN, AND VTR DETAILS.
9. EXPOSED PIPING: PROVIDE CHROME PLATING FOR EXPOSED PIPING IN FINISHED ROOMS.
10. PENETRATIONS: PROVIDE ESCUTCHEON PLATES FOR EXPOSED PIPING PENETRATIONS AND SHEET METAL FLASHING FOR EXPOSED DUCTWORK PENETRATIONS.
11. SHAFT AND PLENUM CONNECTIONS: SEAL CONNECTIONS TO AIR SHAFTS AIRTIGHT. PROVIDE AIRTIGHT SEAL AROUND PENETRATIONS IN AIR PLENUMS.
12. LIGHT FIXTURE CLEARANCE: COORDINATE LOCATIONS OF MECHANICAL WORK TO PROVIDE CLEARANCES OVER LIGHTING FIXTURES FOR REMOVAL AND REPLACEMENT.
13. CABLE TRAYS: DUCTWORK AND PIPING INSTALLED ADJACENT TO ELECTRICAL CABLE TRAYS SHALL ALLOW MINIMUM ACCESS OF 6" ABOVE AND TO THE SIDE OF CABLE TRAYS.
14. MOTORS: COMPLY WITH ENERGY CODE ENFORCED BY AHJ FOR MINIMUM EFFICIENCIES UNDER FULL LOAD.
15. ACCESS CLEARANCES FOR MAINTENANCE AND REPLACEMENT: VERIFY PHYSICAL DIMENSIONS OF EQUIPMENT TO ENSURE THAT ACCESS CLEARANCES CAN BE MET. COORDINATE LOCATIONS OF MECHANICAL WORK AND WORK OF OTHER TRADES TO PROVIDE ACCESS CLEARANCES FOR SERVICE AND MAINTENANCE.

COORDINATION REQUIREMENTS

1. PIPING: COORDINATE WITH STRUCTURAL FOR EXACT LOCATION OF ALL STRUCTURAL FRAMING AND FOOTINGS AND FINALIZE THE EXACT ROUTING OF ALL PIPES WITH STRUCTURAL AND AT THE SITE PRIOR AND DURING THE CONSTRUCTION.
2. ADJUSTMENTS: ALL EQUIPMENT, MOTORS, FANS GAS BURNERS, IGNITION DEVICES, DRIVES, ETC. SHALL BE ADJUSTED AND BALANCED TO OPERATE AT SPECIFIED RATINGS AS REQUIRED FOR THIS PROJECT SITE AND ACCOUNTING FOR ELEVATION ABOVE SEA LEVEL.
3. APPROVALS: MECHANICAL AND PLUMBING EQUIPMENT SHALL BE APPROVED FOR INSTALLATION IN THE PROJECT LOCATION AND SHALL HAVE ALL CERTIFICATIONS AND RATINGS TO MEET ALL ENERGY, POLLUTION, ENVIRONMENTAL, SEISMIC, ETC. CODES AND REGULATIONS. THE CONTRACTOR SHALL COORDINATE WITH HIS MANUFACTURE SUPPLIERS AND SHALL INCLUDE ALL COSTS REQUIRED TO MEET THESE REQUIREMENTS IN HIS BID.
4. FIRE PROTECTION: CONTRACTOR SHALL PROVIDE A FULLY DESIGNED FIRE PROTECTION SPRINKLER SYSTEM IN COMPLIANCE WITH NFPA AND LOCAL CODES. PROVIDE DESIGN, PERMITS, MATERIALS, INSTALLATION, TESTING AND ALL OTHER FOR A FULLY OPERATIONAL SYSTEM. LOCATION OF ALL PIPING TO BE COORDINATED WITH OTHER TRADES.

DRAWINGS ARE DIAGRAMMATIC, SHOWING THE GENERAL LOCATION, TYPE, LAYOUT, AND EQUIPMENT REQUIRED. THE DRAWINGS SHALL NOT BE SCALED FOR EXACT MEASUREMENT. REFER TO ARCHITECTURAL DRAWINGS FOR DIMENSIONS. REFER TO MANUFACTURER'S STANDARD INSTALLATION DRAWINGS FOR EQUIPMENT CONNECTIONS AND INSTALLATION REQUIREMENTS. PROVIDE DUCTWORK, CONNECTIONS, ACCESSORIES, OFFSETS, AND MATERIALS NECESSARY FOR A COMPLETE SYSTEM.

COORDINATION REQUIREMENTS

1. IRRIGATION: COORDINATE WITH IRRIGATION CONTRACTOR FOR THEIR WATER SUPPLY REQUIREMENTS AND LOCATIONS.
2. GAS: CONTRACTOR/GAS COMPANY SHALL FINALIZE GAS METER AND GAS SERVICE LOCATIONS.
3. UTILITIES: COORDINATE WITH SITE UTILITY CONTRACTOR AND CIVIL DRAWINGS FOR UTILITY CONNECTIONS AND EXTENSIONS.
4. ROOF DRAINAGE: COORDINATE WITH GENERAL CONTRACTOR FOR ROOF DRAIN AND OVERFLOWS, SCUPPER DRAINS, AND CONDENSATE DRAINS.
5. PLUMBING FIXTURES: COORDINATE WITH ARCHITECTURAL AND OTHER TRADES EXACT LOCATION OF ALL PLUMBING FIXTURES.

PLUMBING NOTES

1. CONNECTIONS: PROVIDE PLUMBING FIXTURE CONNECTIONS TO BUILDING WASTE, VENT, COLD WATER, AND HOT WATER SYSTEM IN ACCORDANCE WITH DRAWINGS, MANUFACTURER'S RECOMMENDATIONS, AND LOCAL CODES. CONNECT TO EACH FIXTURE, EQUIPMENT, ETC. WITH ALL ACCESSORIES, VALVES, VACUUM BREAKERS, REGULATORS, UNIONS, ETC. AS REQUIRED AND AS RECOMMENDED BY THE MANUFACTURERS. REFER TO PLUMBING FIXTURE CONNECTION SCHEDULE ON PLANS.
2. HOT AND COLD: WATER PIPING CONNECTION TO EACH FIXTURE SHALL BE COLD WATER ON THE RIGHT HAND SIDE AND HOT WATER ON THE LEFT HAND SIDE.
3. HOT WATER: NON-CIRCULATING HOT WATER PIPE SHALL NOT EXCEED 10' UNLESS OTHERWISE SHOWN ON DRAWINGS. HOT WATER PIPING IN UNITS DOES NOT APPLY.
4. VENT STACKS: COORDINATE VENT STACK WITH HVAC EQUIPMENT TO MAINTAIN MINIMUM 10' CLEARANCE FROM OUTSIDE AIR INTAKES.
5. CLEANOUTS: PROVIDE CLEANOUTS PER CURRENT CPC AND AS REQUIRED BY LOCAL JURISDICTIONS. CLEANOUTS SHALL BE LOCATED IN WALLS/FLOORS WHERE THEY ARE NOT HIGHLY VISIBLE. LOCATIONS SHALL BE SUBMITTED TO ARCHITECT FOR APPROVAL. NOTE: NOT ALL CLEANOUTS ARE SHOWN ON THE PLUMBING DRAWINGS.
6. SHUT-OFFS: PROVIDE SHUT-OFF VALVES/STOPS AT HOT AND COLD WATER SUPPLY TO EACH FIXTURE. EXCEPTION: PROVIDE SCREWDRIVER STOPS AT BATH/SHOWERS.
7. TUB SPOUTS SHALL BE THREADED (NO PUSH-ON FITTINGS).
8. TRAP ARMS: PROVIDE TRAP ARMS SUCH THAT THE MAXIMUM LENGTH WILL NOT EXCEED CODE REQUIREMENTS.
9. ADA INSULATION: AT PLUMBING PIPING EXPOSED UNDER LAVATORIES, INSULATE THE EXPOSED PIPING AND TRAPS WITH PRODUCT SPECIFICALLY DESIGNED FOR THIS APPLICATION MEETING ADA REQUIREMENTS. PROVIDE HANDI-LAV GUARD OR EQUIVALENT. OFFSET P-TRAPS TO CLEAR WHEELCHAIR ACCESS.
10. FREEZE PROTECTION: WATER PIPING SHALL BE INSTALLED ON THE WARM SIDE OF INSULATION. ROUTE NO WATER PIPING IN ATTIC SPACE. HEAT TAPING IS NOT ACCEPTABLE.
11. GAS EQUIPMENT: GAS EQUIPMENT SHALL BE INSTALLED PER EQUIPMENT LISTINGS, LOCAL CODES, AND NFPA.
12. GAS CONNECTIONS: INSTALL FLEXIBLE QUICK DISCONNECT ASSEMBLIES FOR ALL GAS FIRED KITCHEN EQUIPMENT PER LOCAL JURISDICTIONS.
13. WATER HAMMER ARRESTERS: PROVIDE AT THE END OF HOT AND COLD WATER LINES SERVING TWO OR MORE FIXTURES; SIZE IN ACCORDANCE WITH PLUMBING AND DRAINAGE INSTITUTE (PDI) REQUIREMENTS. WATER HAMMER ARRESTORS ARE REQUIRED FOR QUICK CLOSING VALVES, SUCH AS LAUNDRY WASHERS, FLUSH VALVES (PUBLIC TOILETS), ETC.
14. REDUCED PRESSURE BACKFLOW PREVENTERS: PROVIDE INDIRECT DRAIN PIPING FROM RPBP TO NEAREST DRAIN; INSTALL FUNNEL AT RPBP IF REQUIRED.
15. TRAP PRIMERS: PROVIDE TRAP PRIMERS AND PIPING FOR DRAINS AND FLOOR SINKS. ARRANGE PIPING TO ACHIEVE EQUAL FLOW TO EACH DRAIN AND FLOOR SINK FOR TRAP PRIMERS SERVING MULTIPLE DRAINS AND FLOOR SINKS.
16. PER PLUMBING CODE, WATER HEATERS SHALL BE PLACED ON A CONCRETE PAD AT LEAST 3" ABOVE ADJOINING GROUND LEVEL.
17. ACCESS PANELS: PROVIDE ACCESS PANELS FOR ALL SHUT OFF VALVES.

PIPING NOTES

1. DISASSEMBLY PROVISIONS: PROVIDE UNIONS OR FLANGES AT PIPING CONNECTIONS TO EQUIPMENT, COILS, TRAPS, CONTROL VALVES, AND OTHER COMPONENTS TO ALLOW DISASSEMBLY FOR MAINTENANCE.
2. REDUCERS: PROVIDE AS REQUIRED FROM LINE PIPE SIZE TO EQUIPMENT, TRAP, COIL, AND CONTROL VALVE CONNECTION SIZES.
3. OFFSETS: PROVIDE FOR BRANCH LINES TO EQUIPMENT.
4. DIELECTRIC UNIONS: PROVIDE AT CONNECTIONS OF DISSIMILAR PIPE.
5. REFRIGERANT PIPING: PROVIDE SIZING & INSTALLATION IN STRICT ACCORDANCE WITH MANUFACTURER'S INSTRUCTIONS.
6. CONDENSATE DRAIN: PROVIDE A P-TRAP FOR EACH HVAC UNIT CONDENSATE PAN WITH PLUG TEES FOR CLEANING. CONDENSATE DRAINS SHALL BE DISCHARGED TO AN INDIRECT WASTE OR OUTSIDE.
7. PIPE AND EQUIPMENT INSULATION AND NOISE ISOLATION: ACOUSTO-PLUMB SYSTEM AT 1" OR SMALLER WATER PIPES. HOLDRITE SILENCER SYSTEM AT 1-1/4" AND LARGER.

PRE-CON MEETING

CONTRACTORS SHALL ATTEND A PRE-CONSTRUCTION MEETING WITH THE ENGINEER FOR THE PURPOSE OF REVIEWING THE WORK PRIOR TO ORDERING ANY EQUIPMENT OR PERFORMING ANY WORK. THE MEETING SHALL BE LOCATED AT THE PROJECT SITE ON A DATE AND TIME TO BE MUTUALLY AGREED. THE MEETING WILL BE A WORKING SESSION. THE MEETING WILL BE FACILITATED BY THE ENGINEER AND THE AGENDA WILL INCLUDE A DETAILED REVIEW OF THE PLANS AND SPECIFICATIONS, CROSS CHECK WITH OTHER TRADES FOR COORDINATION ISSUES, REVIEW OF PROPOSED PRODUCTS, REVIEW OF PLANNED MEANS AND METHODS, AND ON-SITE INVESTIGATION OF FIELD CONDITIONS RELATIVE TO EXISTING CONDITIONS THAT COULD AFFECT THE WORK. PERSONS ATTENDING THE MEETING SHALL BE KNOWLEDGEABLE OF THE PROJECT AND SHALL BE THE SPECIFIC PERSONS INTENDED TO CONTINUE WITH THE PROJECT THROUGH TO COMPLETION. IF REQUIRED, REVISED PLANS WILL BE ISSUED THROUGH OFFICIALCHANNELS. CHANGES IN THE BID PRICE WILL BE DISCUSSED,BUT NO CHANGE ORDERS WILL BE ISSUED UNLESS PROCESSED THOUGH OFFICIAL CHANNELS. IT SHALL BE UNDERSTOOD THAT THE ENGINEER HAS NO AUTHORITY TO ISSUE CHANGE ORDERS.

THE FOLLOWING TRADES SHALL BE REPRESENTED FOR THE MINIMUM TIME INDICATED:

MECHANICAL SHEET METAL	2 HOURS
PLUMBING/PIPING	2 HOURS
ELECTRICAL	2 HOURS
GENERAL CONTRACTOR	ALL SESSIONS

APPLICABLE CODES

THESE DRAWINGS ARE BASED ON THE FOLLOWING CODES:

-2019 CALIFORNIA BUILDING CODE

-2019 CALIFORNIA MECHANICAL CODE

-2019 CALIFORNIA PLUMBING CODE

-2019 CALIFORNIA NON-RESIDENTIAL ENERGY CODE

PIPE MATERIALS

1. UNDERGROUND SERVICE ENTRANCE PIPING: CPVC SCHEDULE 80.
2. WATER DISTRIBUTION PIPING: CPVC FOR MAINS AND RISERS, PEX IN RESIDENTIAL UNITS. COPPER TYPE L ON THE ROOF AND IN THE MECHANICAL ROOM.
3. UNDERGROUND WASTE & VENT PIPING: PVC.
4. ABOVEGROUND WASTE & VENT PIPING: CAST IRON TO MEET OAKLAND MUNICIPAL CODE FOR CAST IRON PIPE, FITTINGS AND BANDS.
5. CONDENSATE DRAIN PIPING: TYPE M COPPER.
6. UNDERGROUND STORM PIPING: PVC.
7. ABOVEGROUND STORM PIPING: CAST IRON TO MEET OAKLAND MUNICIPAL CODE FOR CAST IRON PIPE, FITTINGS AND BANDS.
8. GAS PIPING: STEEL PIPE, ASTM A 53; TYPE E OR S; GRADE B; SCHEDULE 40. EXPOSED OUTSIDE GAS PIPE TO BE GALVANIZED MATERIAL.

NOTES:
1. ALL METALLIC PIPE, FITTINGS AND PARTS OF FIXTURES BURIED IN THE GROUND SHALL BE PROTECTED BY AT LEAST 2 LAYERS OF 3 MIL PLASTIC SLEEVE OR EQUIVALENT WRAPPING.
2. CONCEAL ALL PEX PIPING FROM UV LIGHT.

DRAWING INDEX

		INCLUDED IN SET				
DWG	DESCRIPTION	100% SD SET 05/10/2022	50% DD SET 07/08/2022	100% DD SET 09/16/2022	50% CD SET 11/11/2022	PERMIT SET 12/09/2022
P0.00	LEGEND, GENERAL NOTES, AND SHEET INDEX	X	X	X	X	X
P0.01	SCHEDULES		X	X	X	X
P0.02	CALCULATIONS			X	X	X
P1.00	SITE PLAN		X	X	X	X
P2.00	BUILDING PLANS – UNDERSLAB	X	X	X	X	X
P2.01	BUILDING PLANS – LEVEL 1	X	X	X	X	X
P2.02	BUILDING PLANS – LEVEL 2	X	X	X	X	X
P2.03	BUILDING PLANS – LEVEL 3	X	X	X	X	X
P2.04	BUILDING PLANS – LEVEL 4	X	X	X	X	X
P2.05	BUILDING PLANS – LEVEL 5	X	X	X	X	X
P2.06	BUILDING PLANS – LEVEL 6	X	X	X	X	X
P2.07	BUILDING PLANS – ROOF	X	X	X	X	X
P3.00	ENLARGED UNIT PLANS	X	X	X	X	X
P3.01	ENLARGED UNIT PLANS	X	X	X	X	X
P3.02	ENLARGED UNIT PLANS	X	X	X	X	X
P3.03	ENLARGED PLANS		X	X	X	X
P3.04	ENLARGED PLANS				X	X
P4.00	WASTE & VENT RISER DIAGRAMS		X	X	X	X
P4.01	WATER SUPPLY RISER DIAGRAMS		X	X	X	X
P4.02	DETAILS & DIAGRAMS		X	X	X	X
P4.03	DETAILS & DIAGRAMS		X	X	X	X
P4.04	DETAILS & DIAGRAMS		X	X	X	X
P4.05	DETAILS & DIAGRAMS				X	X

PYATOK
1611 TELEGRAPH AVE.
SUITE 200
OAKLAND, CA 94612
T. 510.465.7010 | F. 510.465.8575
www.pyatok.com

THE UNITY COUNCIL
1900 FRUITVALE AVE
#2A
OAKLAND, CA 94601

EMERALD CITY ENGINEERS, INC
21705 Highway 99 Lynnwood, WA 98036 425-741-1200 tel / 1201 fax

2700 INTERNATIONAL
OAKLAND, CA 94601

STAMP: REGISTERED PROFESSIONAL ENGINEER MASSAMAGHAN KONE No. EXP. 03-31-24 MECHANICAL STATE OF CALIFORNIA 12/09/22

ISSUE SCHEDULE

100 SD	5/11/22
50 DD	7/15/22
100 DD	9/16/22
PRICING SET	11/11/22
PERMIT SET	12/09/22

REVISION SCHEDULE

NO.	ISSUE	DATE

JOB NUMBER:	2049-008
DRAWN BY:	TJP
CHECKED BY:	MK
ISSUE DATE:	12/09/2022
SCALE:	

TITLE:

LEGEND, GENERAL NOTES, AND SHEET INDEX

SHEET:

P0.00

PRELIMINARY - Not for Construction -

© 2019 PYATOK ARCHITECTURE & URBAN DESIGN

4/22/2022 6:28:22 PM

COPYRIGHT 2022, EMERALD CITY ENGINEERS, INC.

INTERCEPTOR SCHEDULE

EQUIP NO.	SERVICE	BASIS OF DESIGN	NOTES
OWS-1	GARAGE DRAINS	JENSEN PRECAST JP320EE-SO	320 GAL OIL/SAND SEPARATOR (1)(2)

NOTES: (1) ENTIRE SEPARATOR SHALL BE "H20" TRAFFIC RATED.
(2) INTERCEPTOR SHALL HAVE OWN INDEPENDENT VENT TO THE ROOF.

HOT WATER CIRC. BALANCING VALVE SCHEDULE

PROVIDE CIRCUITSOLVER MODEL CSUA WITH INTEGRAL SHUTOFF VALVES.
DESIRED CLOSING TEMPERATURE SHALL BE 115°F.

NOTE: SIZE PER PLANS

STORAGE TANK SCHEDULE

EQUIP NO.	SERVICE	STORAGE TANK					BASIS OF DESIGN
		ARRGT	DIA	HEIGTH	CAPACITY	WEIGHT	
ST-1	DOMESTIC WATER	VERTICAL	58"	126"	1189 GAL	12,050 LBS	LOCHINVAR FVG1189

EXPANSION TANK SCHEDULE

EQUIP NO.	SERVICE	CAPACITY, GALLONS	TANK SIZE, IN		BASIS OF DESIGN
			DIA.	HEIGHT	
ET-1	DOMESTIC HOT WAT	66	24	48	AMTROL ST-120-VC
ET-2	HOT WATER RECIRCULATION LOOP	6.4	12	14	AMTROL ST-12-C

THERMOSTATIC MIXING VALVE SCHEDULE

TMV-1	(2) SYMMONS 7-1000 MIXING VALVES PIPED IN PARALLEL. MAXIMUM PRESSURE DROP OF 10 PSI 120 GPM MAXIMUM FLOW.

PACKAGED BOOSTER PUMP SCHEDULE

EQUIP NO.	SERVICE	TYPE	FLOW PER PUMP, GPM	TOTAL FLOW, GPM	PRESSURE RISE INLET/OUTLET PSIG	MOTOR HP (EACH)	STORAGE TANK TYPE/GAL	ELECTRICAL	WEIGHT (lbs)	BASIS OF DESIGN
BP-1	DOMESTIC WATER	DUPLEX	100	200	47/80	5	INTEGRAL/80	208V/3P	1,220	FLOWTHERM FMV2.1-9LH (1)(2)(3)

NOTES: (1) SINGLE POINT CONNECTION.
(2) PROVIDE ALL REQUIRED VALVES, PIPING, CONTROLS, ETC. FOR A COMPLETE SYSTEM.
(3) PROVIDE VFD'S FOR EACH PUMP.

PLUMBING FIXTURE SCHEDULE (1) (5)

PLAN MARK	ROOM LOCATION	SERVICE SIZE (INCHES) CW	HW	W	V	FIXTURE TYPE	FINISH	MANUFACTURER & MODEL	FLOW RATE (GPM)	NOTES
BATH-1	RESIDENTIAL UNIT BATHROOM	1/2	1/2	2	1-1/2	BATHTUB	WHITE	STERLING 71240110-0		
						HEAD, TRIM, VALVE	CHROME (POLISHED)	KOHLER CORALAIS K-TS15601-4H	1.5	PROVIDE INTEGRAL STOPS
BATH-2	RESIDENTIAL UNIT BATHROOM (ADA)	1/2	1/2	2	1-1/2	BATHTUB	WHITE	STERLING 71240115-0		
						HEAD, TRIM, VALVE	CHROME (POLISHED)	KOHLER CORALAIS K-TS15601-4H	1.5	PROVIDE INTEGRAL STOPS
						HANDSHOWER	CHROME (POLISHED)	KOHLER K-72595-CP	2.0	
						GRAB BAR	CHROME (POLISHED)	KOHLER K-8524-CP		WATER SENSE CERTIFIED
LAV-1	RESIDENTIAL BATHROOM	1/2	1/2	2	1-1/2	LAVATORY	WHITE	STERLING 442001-0		ADA COMPLIANT
						FAUCET	CHROME (POLISHED)	KOHLER CORALAIS K-15182-4RA-CP	1.0	WATER SENSE CERTIFIED; PROVIDE 1.0 GPM AERATOR
LAV-2	COMMUNITY RESTROOM	1/2	1/2	2	1-1/2	LAVATORY	WHITE	STERLING 442004-0		ADA COMPLIANT
						FAUCET	CHROME (POLISHED)	KOHLER K-15198-4RA	0.5	ADA COMPLIANT; WATER SENSE CERTIFIED;
SK-1	RESIDENTIAL KITCHEN	1/2	1/2	2	1-1/2	SINK	STAINLESS STEEL	ELKAY LRAD 2521 60 3		TOP MOUNT. PROVIDE CONNECTION TO DISHWASHER. PROVIDE REAR OVERFLOW, CONNECT TO SEWER SYSTEM.
						FAUCET	CHROME (POLISHED)	KOHLER CORALAIS K-15171-F-CP	1.5	
						GARBAGE DISPOSAL	-	WASTE KING 1001		1/2 HP
SK-2	COMMUNITY KITCHEN SINK	1/2	1/2	2	1-1/2	SINK	STAINLESS STEEL	LRAD 2521 60 3		TOP MOUNT. PROVIDE CONNECTION TO DISHWASHER.
						FAUCET	CHROME (POLISHED)	CORALAIS K-15171-F-CP	1.8	
						GARBAGE DISPOSAL	-	LEGEND 3300		3/4 HP
WC-1	RESIDENTIAL UNIT	1/2		3	2	WATER CLOSET	WHITE	STERLING WINDHAM 403082-0	1.28 GPF	ADA COMPLIANT; WATER SENSE CERTIFIED
						SEAT	WHITE	STERLING K-4774		
WC-2	PUBLIC RESTROOM	1/2		3	2	WATER CLOSET	WHITE	KOHLER HIGHLINE K-3519-0	1.0 GPF	ADA COMPLIANT; WATERSENSE CERTIFIED
						SEAT	WHITE	KOHLER K-4731-C-0		
MS-1	PER DWGS	1/2	1/2	3	2	MOP BASIN	WHITE	FLORESTONE FM UTILITY SINK		
						FAUCET	POLISHED CHROME	KOHLER K-8907-CP		
EW-1	PER DWGS	1/2	1/2	2	1-1/2	EYE WASH STATION	GREEN	HAWS 7260BT-7270BT		MIXING VALVE: AXION 9201EW
FCO	PER DWGS					FLOOR CLEANOUT	NICKEL BRONZE	JAY R. SMITH 4020		
WCO	PER DWGS					WALL CLEANOUT	STAINLESS STEEL	JAY R. SMITH 4402		
AD-1	PER DWGS			NOTE 2		AREA DRAIN	N/A	JAY R. SMITH 1479		
BWV-1	PER DWGS			NOTE 2		BACKWATER VALVE	N/A	JAY R. SMITH 7012		
TD-1	PER DWGS			NOTE 2		GARAGE TRENCH DRAIN	N/A	ZURN Z-886-HD		
GD-1	PER DWGS			NOTE 2		GARAGE AREA DRAIN	N/A	JAY R. SMITH 2614		
FD-1	PER DWGS			NOTE 2		FLOOR DRAIN	NICKLE BRONZE	JAY R. SMITH 2005 SERIES		(6)
FD-2	PER DWGS			NOTE 2		FLOOR DRAIN	NICKLE BRONZE	JAY R. SMITH 2320		(6)
FS-1	PER DWGS			NOTE 2		FLOOR SINK	NICKLE BRONZE	JAY R. SMITH 3140		
HB-1	PER DWGS	3/4				WALL HYDRANT	N/A	JAY R. SMITH 5609QT		PROVIDE VACUUM BREAKER
HB-2	PER DWGS	3/4				ROOF HYDRANT	N/A	CHAMPION SRH7501BFP		PROVIDE VACUUM BREAKER
HB-3	PER DWGS	3/4	3/4			TRASH ROOM HYDRANT	N/A	CHAMPION SYH7512BFP		PROVIDE VACUUM BREAKER
HD-1	PER DWGS			2	1-1/2	HUB DRAIN	N/A	JAY R. SMITH 2645		PROVIDE 2x3 REDUCER
RD	PER DWGS			NOTE 2		ROOF DRAIN	N/A	JAY R. SMITH 1320		
OD	PER DWGS			NOTE 2		ROOF OVERFLOW DRAIN	N/A	JAY R. SMITH 1320-WD		
IB-1	RESIDENTIAL UNIT	1/2				ICE MAKER BOX (FIRE-RATED)	WHITE	OATEY 38492		
IB-2	RESIDENTIAL UNIT	1/2				ICE MAKER BOX (NON-RATED)	WHITE	OATEY 38572		
WB-1	LAUNDRY	3/4	3/4	2	1-1/2	WASHER BOX	WHITE	PROVENT SYSTEMS FIRE GUARD WASHER BOX		
WP-1	WASHER PAN			2	1-1/2	WAHSER PAN	N/A	MAINLINE ML10921		27"x29" DRAIN PAN
	FLOOD STOP VALVE					FLOOD STOP VALVE	N/A	WATTS A2C-M1		

NOTES: (1) PROVIDE RED/HOT AND BLUE/COLD WATER INDICATORS TO ALL FIXTURES.
(2) SIZE PER PLANS
(3) FLUSH TRIGGER SHALL BE ON WIDE SIDE OF ROOM
(4) REFER TO ARCH PLANS FOR MOUNTING HEIGHT
(5) CONTRACTOR SHALL CONFIRM MAKE, MODEL, AND FINISH OF ALL FIXTURES WITH OWNER, ARCHITECT, AND INTERIOR DESIGNER PRIOR TO ORDERING.
(6) FLOOR DRAINS AND/OR SHOWERS INSTALLED DIRECTLY ABOVE FOOD PREP AREAS SHALL BE EQUIPPED WITH INTEGRAL SEEPAGE PANS.

TANKLESS HEAT PUMP WATER HEATER SCHEDULE

EQUIP NO.	SERVICE	HEATING CAPACITY (30°F AIR TEMP)	HEATING COP (30°F AIR TEMP)	RECOVERY RATE (100° DELTA)	ELECTRICAL VOLTAGE	MCA	MOCP	WEIGHT, LBS	BASIS OF DESIGN (1)(2)(3)(4)(5)(6)
HPWH-1	DOMESTIC HOT WATER	42.9 MBH	2.1	52 GPH	208V/1P	50.23	80	400	COLMAC CxV-5
HPWH-2	DOMESTIC HOT WATER	42.9 MBH	2.1	52 GPH	208V/1P	50.23	80	400	COLMAC CxV-5
HPWH-3	DOMESTIC HOT WATER	42.9 MBH	2.1	52 GPH	208V/1P	50.23	80	400	COLMAC CxV-5
HPWH-4	DOMESTIC HOT WATER	42.9 MBH	2.1	52 GPH	208V/1P	50.23	80	400	COLMAC CxV-5
HPWH-5	DOMESTIC HOT WATER	42.9 MBH	2.1	52 GPH	208V/1P	50.23	80	400	COLMAC CxV-5
HPWH-6	DOMESTIC HOT WATER	42.9 MBH	2.1	52 GPH	208V/1P	50.23	80	400	COLMAC CxV-5
HPWH-7	DOMESTIC HOT WATER	42.9 MBH	2.1	52 GPH	208V/1P	50.23	80	400	COLMAC CxV-5
HPWH-8	DOMESTIC HOT WATER	42.9 MBH	2.1	52 GPH	208V/1P	50.23	80	400	COLMAC CxV-5

NOTES: (1) PROVIDE OPTIONAL PROTECTIVE SCREEN FOR OUTDOOR APPLICATIONS, GALVANIZED ENCLOSURE, AND ELECTRONIC EXPANSION VALVE (EEV).
(2) PROVIDE INLINE BOOSTER PUMP TO/FROM STORAGE TANK - REFER TO HPCP-1
(3) PROVIDE CXS SUPERVISOR SYSTEM CONTROL, CONNECT EXTERNAL PUMP (HPCP-1) TO SMART PUMP CONTROL SIGNAL OUTPUT
(4) PROVIDE OPTIONAL 316L STAINLESS CABINET MATERIAL.
(5) PROVIDE SPECIFIED UNIT OR EQUAL.
(6) PROVIDE COLMAC CLOUD MONITORING SYSTEM WITH REPORTING AT (1) LOCATION.

TANK-TYPE WATER HEATER SCHEDULE

EQUIP NO.	AREA SERVED	STORAGE GALLONS	INPUT, KW	ELECTRICAL CONNECTION	STORAGE TEMP, °F	GPH RECOVERY AT 90°F TR	WEIGHT, POUNDS	BASIS OF DESIGN
EWH-1	HOT WATER CIRCULATION LOOP	50	30	208V/3P, 83.3A	140	137	700	A.O. SMITH DRE-52 (1)

NOTES: (1) PROVIDE TANK-TYPE ELECTRIC WATER HEATER WITH RESISTANCE HEATER.

PUMP SCHEDULE

EQUIP NO.	SERVICE	TYPE	FLOW, GPM	HEAD, FT	PUMP, RPM	ELECTRICAL VOLTAGE	HP	BASIS OF DESIGN (1)(2)(3)
HWCP-1	120°F HW LOOP (PRIMARY)	INLINE	12.75	55	2904	208V/3P	2	BELL & GOSSETT XL95-160

NOTES: (1) ALL BRONZE, LEAD FREE, MAINTENANCE FREE.
(2) PROVED DEMAND AND TEMPERATURE CONTROL WITH AQUASTAT.

HEAT PUMP WATER HEATER PUMP SCHEDULE

EQUIP NO.	SERVICE	TYPE	FLOW, GPM	HEAD, FT	PUMP RPM	MOTOR HP	ELECTRICAL	BASIS OF DESIGN
HPCP-1	HEAT PUMP WATER LOOP	INLINE	70	40	2604	3	208V/3P	BELL & GOSSETT XL110-180 (1)(2)(3)(4)

NOTES: (1) ALL BRONZE, SUITABLE FOR POTABLE WATER APPLICATION.
(2) PROVIDE VFD
(3) PUMP ACTIVATION AND CONTROL TIED TO PRESSURE SENSOR LOCATED INLINE ON THE ROOF.
(4) CONNECT TO WATER HEATER CxS SUPERVISOR SYSTEM CONTROL

PLUMBING PIPE INSULATION SCHEDULE

SERVICE	MATERIAL	THICKNESS	FEILD APPLIED JACKET	VAPOR RETARDER REQUIRED
DOMESTIC, HOT AND RECIRCULATED HOT WATER, OPERATING TEMPERATURE: 105 TO 140 DEG F. (NOTE: THIS APPLIES TO ALL HOT WATER AND RECIRCULATED HOT WATER PIPING).	MINERAL-FIBER WITH JACKET	½"-¾" PIPE: 1" 1"-1½" PIPE: 1½" 2"-6" PIPE: 2"	NONE	YES
HORIZONTAL RAINWATER CONDUCTORS LOCATED IN CONDITIONED SPACES.	MINERAL-FIBER OR CELLULAR GLASS, WITH JACKET	ALL SIZES: 1/2"	FOIL AND PAPER	YES
ROOF DRAIN BODIES	MINERAL-FIBER OR CELLULAR GLASS WITH JACKET	1"	NONE	YES
EXPOSED SANITARY DRAINS AND DOMESTIC WATER SUPPLIES AND STOPS FOR FIXTURES FOR THE DISABLED.	"LAV-GUARD" AS MANUFACTURED BY TRUEBRO	N/A	PVC P-TRAP AND SUPPLY COVERS	NO

NOTES: (1) ENDS SHALL BE SEALED AND JOINTS SHALL BE WRAPPED WITH 10 MIL TAPE.

CALGREEN NOTES

PROJECT SHALL COMPLY WITH THE CURRENT CALGREEN CODE REQUIREMENTS PER BELOW:

RESIDENTIAL MEASURES:
A4.303.1: PLUMBING FIXTURES AND FITTINGS SHALL COMPLY WITH THE PRESCRIPTIVE REQUIREMENTS OF 4.303.1.1 THROUGH 4.303.1.4.4.

A4.303.2: PLUMBING FIXTURES AND FITTINGS REQUIRED IN SECTION

A4.303.1 SHALL BE INSTALLED IN ACCORDANCE WITH THE CPC.

A4.303.1.1: THE EFFECTIVE FLUSH VOLUME OF ALL WATER CLOSETS SHALL NOT EXCEED 1.28 GPF

A4.303.1.3.1: SHOWERHEADS SHALL HAVE A MAXIMUM FLOW RATE OF NOT MORE THAN 1.8 GPM AT 80 PSI.

A4.303.1.4.1: THE MAXIMUM FLOW RATE OF RESIDENTIAL LAVATORY FAUCETS SHALL NOT EXCEED 1.2 GPM AT 60 PSI AND NOT LESS THAN 0.8 GPM AT 20 PSI.

A4.303.1: KITCHEN FAUCETS. MAXIMUM FLOW RATE OF KITCHEN FAUCETS SHALL NOT EXCEED 1.8 GPM AT 60 PSI. NOTE: AERATORS OR OTHER MEANS MAY BE USED TO ACHIEVE REDUCTION.

NON-RESIDENTIAL MEASURES:
A5.303.2.3.1 TIER 1 - 12 PERCENT WATER SAVINGS: A SCHEDULE OF PLUMBING FIXTURES SHALL REDUCE THE OVERALL POTABLE WATER USE WITHIN THE BUILDING BY 12 PERCENT.

NOTE: BUILDING SHALL COMPLY WITH 2016 GREEN CODE 5.303.4 BY THE INSTALLATION OF WATER-CONSERVING FIXTURES (WATER CLOSETS, URINALS) MEETING THE CRITERIA ESTABLISHED IN SECTIONS 5.303.2 OR 5.303.3.

PLUMBING FIXTURES (WATER CLOSETS AND URINALS) AND FITTINGS (FAUCETS AND SHOWERHEADS) SHALL MEET THE STANDARDS REFERENCED IN TABLE 5.303.6.

1. PER 5.504 & 4.504, ALL ADHESIVES, SEALANTS, AND COATINGS SHALL MEET THE VOC LIMITS INDICATED IN CALGREEN.
2. 5.410.2 COMMISSIONING. [N] FOR NEW BUILDINGS 10,000 SQUARE FEET AND OVER, BUILDING COMMISSIONING SHALL BE INCLUDED IN THE DESIGN AND CONSTRUCTION PROCESSES OF THE BUILDING PROJECT TO VERIFY THAT THE BUILDING SYSTEMS AND COMPONENTS MEET THE OWNER'S OR OWNER REPRESENTATIVE'S PROJECT REQUIREMENTS. COMMISSIONING SHALL BE PERFORMED IN ACCORDANCE WITH THIS SECTION BY TRAINED PERSONNEL WITH EXPERIENCE ON PROJECTS OF COMPARABLE SIZE AND COMPLEXITY. COMMISSIONING REQUIREMENTS SHALL INCLUDE:
   1. OWNER'S OR OWNER REPRESENTATIVE'S PROJECT REQUIREMENTS.
   2. BASIS OF DESIGN.
   3. COMMISSIONING MEASURES SHOWN IN THE CONSTRUCTION DOCUMENTS.
   4. COMMISSIONING PLAN.
   5. FUNCTIONAL PERFORMANCE TESTING.
   6. DOCUMENTATION AND TRAINING.
   7. COMMISSIONING REPORT.
3. THIRD PARTY INSPECTION REQUIRED TO CERTIFY THE CALGREEN MEASURES.
4. 4.406.1: SECTION 4.406.1 -- SEAL BUILDING ENVELOPE JOINTS AND OPENINGS ACCORDING TO CEC

4/22/2022 6:28:22 PM

COPYRIGHT 2022, EMERALD CITY ENGINEERS, INC.

PYATOK
1611 TELEGRAPH AVE.
SUITE 200
OAKLAND, CA 94612
T. 510.465.7010 | F. 510.465.8575
www.pyatok.com

THE UNITY COUNCIL
1900 FRUITVALE AVE
#2A
OAKLAND, CA 94601

EMERALD CITY
ENGINEERS, INC
21705 Highway 99 Lynnwood, WA
98036 425-741-1200 tel / 1201 fax

2700 INTERNATIONAL
OAKLAND, CA 94601

STAMP:
REGISTERED PROFESSIONAL ENGINEER
MASSAMAGHAN KONE
No.
EXP. 03-31-24
MECHANICAL
STATE OF CALIFORNIA
12/09/22

ISSUE SCHEDULE

100 SD	5/11/22
50 DD	7/15/22
100 DD	9/16/22
PRICING SET	11/11/22
PERMIT SET	12/09/22

REVISION SCHEDULE

NO.	ISSUE	DATE

JOB NUMBER:	2049-008
DRAWN BY:	TJP
CHECKED BY:	MK
ISSUE DATE:	12/09/2022
SCALE:	

TITLE:

SCHEDULES

SHEET:

P0.01

PRELIMINARY - Not for Construction -

© 2019 PYATOK ARCHITECTURE & URBAN DESIGN

ACOUSTICAL NOTES

1. PROVIDE THE FOLLOWING CLEARANCES BETWEEN WASTE PIPES AND GYPSUM BOARD SURFACES IN WALLS AND CEILINGS:
   a. BEDROOMS: MINIMUM 2-INCH
   b. LIVING AND DINING ROOMS AND KITCHENS: MINIMUM 1-INCH
   c. BATHROOMS, CLOSET AND ALL OTHER ROOMS: MINIMUM ½-INCH
   d. SEE DETAIL 1 ON SHEET P4.05 FOR ADDITIONAL DETAILS.
2. TREAT SUPPLY PIPING AS FOLLOWS:
   a. COPPER: ISOLATE PIPES USING RESILIENT ATTACHMENT DEVICES SUCH AS ACOUSTO-PLUMB SYSTEM OF SLEEVES AND CLAMPS (ORANGE AND BLUE) BY SPECIALTY PRODUCTS, TRISOLATOR PIPE SLEEVES BY ELMDOR/STONEMAN MANUFACTURING COMPANY (916-383-0100), PART B3195 BY COOPER B-LINE OR HOLDRITE SILENCER SYSTEM BY HUBBARD ENTERPRISES (WWW.HOLDRITE.COM) PRODUCT FAMILIES #250, #260 AND #280 FOR COPPER PIPES 1/2" TO 2" DIAMETER. SEE FIGURE 2 FOR ADDITIONAL DETAILS.
   b. PEX: IN BEDROOM WALLS AND CEILING, USE FELT TAPE OR PADS TO 'ISOLATE" PEX FROM ANY CONTACT WITH GYPSUM BOARD WALLS. PEX PIPING IS NOT OTHERWISE REQUIRED TO BE INSTALLED WITH RESILIENT ATTACHMENT DEVICES.
   c. FOR MAIN SUPPLY RISER PIPING, VIBRATION ISOLATE WITH ¾" NEOPRENE WAFFLE PADS UNDER EACH RISER CLAMP SUPPORT ARMS AS SHOWN ON FIGURE 3.
3. WASTE AND DRAIN PIPES SHOULD BE TREATED AS FOLLOWS:
   a. ISOLATE USING RESILIENT ATTACHMENT DEVICES:
   i. TRISOLATOR PIPE SLEEVES BY ELMDOR/STONEMAN MANUFACTURING COMPANY (916-383- 0100) OR PART B3195 BY COOPER B-LINE.
   ii. FELT PADS OR STRIPS HAVING A MINIMUM THICKNESS OF 1/4-INCH THICK FOR PIPES UP TO 2" AND 1/2-INCH THICK FOR PIPES LARGER THAN 2". FELT SHOULD HAVE AN ADHESIVE-BACKING AND A SAE GRADE OF F-3 (SHORE A HARDNESS OF 30).
   iii. NEOPRENE PADS OR STRIPS HAVING A MINIMUM THICKNESS OF 1/4-INCH THICK FOR PIPES UP TO 2" AND 1/2-INCH THICK FOR PIPES LARGER THAN 2". NEOPRENE SHOULD HAVE A DUROMETER OF 30A.
   b. USE SHEET METAL 'PIPE SHIELDS" BETWEEN HANGERS/CLAMPS AND THE FELT OR NEOPRENE ISOLATION MATERIAL TO PREVENT CRUSHING.
   c. AT RISER CLAMPS, USE 1/2-INCH THICK NEOPRENE WAFFLE STYLE PADS HAVING A DUROMETER OF 40A BETWEEN THE RISER CLAMP EAR AND BOTTOM PLATE OR THE FLOOR SLAB.
   d. SEE DETAILS 2 & 3 ON SHEET P4.05
   e. FOR ADDITIONAL DETAILS.
4. SPECIFY PRESSURE BALANCED OR THERMOSTATIC TYPE MIXING VALVES.
5. SPECIFY WATER-HAMMER ARRESTORS AT LAUNDRY WASHING MACHINES.
6. SPECIFY SPRING-LOADED CHECK-VALVES WHERE NECESSARY.
7. AT FLUID CONNECTIONS TO RECIRCULATION OR BOOSTER PUMPS,
   a. LESS THAN 1 HP: FLEXIBLE ELASTOMERIC PIPE CONNECTORS OR COUPLINGS SUCH AS FLEXIBLE RUBBER PIPE BY METRAFLEX.
   b. GREATER THAN 1 HP: FLEXIBLE DOUBLE SPHERE ELASTOMERIC CONNECTORS SUCH AS DOUBLESPHERE UNIONS BY METRAFLEX.
8. AT PRESSURE REGULATORS LOCATED WITHIN THE BUILDING AND NEAR DWELLING UNITS, PROVIDE FLEXIBLE ELASTOMERIC PIPE CONNECTORS OR COUPLINGS SUCH AS FLEXIBLE RUBBER PIPE BY METRAFLEX.

9. AT ELECTRICAL CONNECTIONS TO PUMPS, PROVIDE FLEXIBLE CONDUIT HAVING A MINIMUM LENGTH OF 10- TIMES THE CONDUIT DIAMETER AND INCLUDE A LEAST ONE 90-DEGREE BEND.

PENETRATIONS THROUGH GYPSUM BOARD SHOULD INCLUDE A MINIMUM ¼" GAP BETWEEN THE PIPE AND GYPSUM BOARD THAT IS FILLED WITH FLEXIBLE SEALANT AS SHOWN ON DETAILS 4 & 5 ON SHEET P4.05.

DOMESTIC WATER PIPING SYSTEMS

PLUMBING AND PIPING SYSTEMS INCLUDE COLD AND HOT SUPPLY, RETURN, WASTE, DRAIN AND RAIN WATER LEADERS.

1. FOR PIPES LOCATED IN WALL OR CEILING CAVITIES OF RC(N) RATED ROOMS, PROVIDE A MINIMUM 1/2-INCH CLEARANCE BETWEEN THE PIPE WALL AND FACE OF STUD PLANE.
2. REGULATE WATER LINE PRESSURE TO 75 PSIG AND SIZE BRANCH PIPING FOR A MAXIMUM VELOCITY OF 6 FEET PER SEC (FPS).
3. SPECIFY SPRING-LOADED CHECK-VALVES AND WATER-HAMMER ARRESTORS.
4. SPECIFY 'PRESSURE BALANCING" TYPE MIXING VALVES.
5. SUPPLY PIPES IN WALLS OF OCCUPIED AREAS AND CEILING AREAS SHOULD BE ISOLATED USING RESILIENT ATTACHMENT DEVICES SUCH AS ACOUSTO-PLUMB SYSTEM OF SLEEVES AND CLAMPS (ORANGE AND BLUE) BY SPECIALTY PRODUCTS, TRISOLATOR PIPE SLEEVES BY ELMDOR/STONEMAN MANUFACTURING COMPANY (916-383-0100), OR HOLDRITE SILENCER SYSTEM BY HUBBARD ENTERPRISES (WWW.HOLDRITE.COM) PRODUCT FAMILIES #250, #260 AND #280 FOR COPPER PIPES 1/2" TO 2" DIAMETER.
6. WASTE AND DRAIN PIPES OVER OCCUPIED AREAS SHOULD BE ISOLATED USING RESILIENT ATTACHMENT DEVICES SUCH AS TRISOLATOR PIPE SLEEVES BY ELMDOR/STONEMAN MANUFACTURING COMPANY (916-383-0100). ALTERNATELY, USE FELT OR NEOPRENE PADS OR STRIPS HAVING A MINIMUM THICKNESS OF 1/4-INCH THICK FOR PIPES UP TO 2" AND 1/2-INCH THICK FOR PIPES LARGER THAN 2". FELT SHOULD HAVE AN ADHESIVE-BACKING AND A SAE GRADE OF F-3 (SHORE A HARDNESS OF 30). NEOPRENE SHOULD HAVE A DUROMETER OF 30A. USE SHEET METAL 'PIPE SHIELDS" BETWEEN HANGERS/CLAMPS AND THE FELT OR NEOPRENE ISOLATION MATERIAL TO PREVENT CRUSHING. AT RISER CLAMPS, USE 1/2-INCH THICK NEOPRENE WAFFLE STYLE PADS HAVING A DUROMETER OF 40A BETWEEN THE RISER CLAMP EAR AND BOTTOM PLATE OR THE FLOOR SLAB.
7. AT CONNECTIONS TO PUMPS AND PRESSURE REGULATORS, PROVIDE FLEXIBLE PIPING HAVING A MINIMUM LENGTH OF 10-TIMES THE PIPE DIAMETER AND INCLUDE A LEAST ONE 90-DEGREE BEND.
8. DO NOT MOUNT OR ALLOW PIPES TO BE IN DIRECT CONTACT WITH GYPSUM BOARD SURFACES. PENETRATIONS THROUGH GYPSUM BOARD SHOULD INCLUDE A MINIMUM ¼" GAP BETWEEN THE PIPE AND GYPSUM BOARD THAT IS FILLED WITH FLEXIBLE SEALANT.

WATER SUPPLY SIZING CALCULATIONS

HORIZONTAL MAINS

Emerald City Engineers, Inc.
21705 Highway 99
Lynnwood, WA 98036

Project Name: 2700 International
Project Number: 2049-008
Edited By: TJP
Edit Date: 7/11/2022

SIZING IS PER 2019 CPC

WATER SUPPLY PIPE SIZING CALCULATION FORM - MAINS

AT DOMESTIC WATER CONNECTION: 60.0 PSI STATIC PRESSURE
OBTAIN FROM CIVIL OR LOCAL UTILITY COMPANY.

WATER METER LOSS: 5.0 PSI
TYPICALLY 3-8 PSI.

BACKFLOW PREVENTER LOSS: 8.0 PSI
TYPICALLY 5-10 PSI.

AVAILABLE PRESSURE: 47.0 PSI

AVAILABLE PRESSURE AFTER BOOSTER PUMP: 80.0 PSI

STATIC LIFT: 12 FEET = 5.2 PSI

REQUIRED MINIMUM PRESSURE AT BOTTOM OF FURTHEST RISER: 64.0 PSI

PRESSURE AVAILABLE TO OFFSET FRICTION LOSSES: 10.8 PSI

PIPING SYSTEM LENGTH FROM SERVICE TO FURTHEST UNIT SUBMETER: 240.0 FEET
FITTING ALLOWANCE: 150.0 FEET

MAXIMUM FRICTION LOSS FACTOR: 2.8 PSI/100 FT

SELECTED FRICTION LOSS FACTOR: 2.8 PSI/100 FT

MAX CW & HW VELOCITY 8 FPS FOR 1/2" - 2".
MAX CW & HW VELOCITY 5 FPS FOR PIPES 2-1/2" & LARGER.

SUPPLY PIPE SIZING SCHEDULE

PIPE SIZE	FLUSH TANK CW			HOT WATER			FLUSH VALVE CW			PIPE MATERIAL
IN	FLOW, GPM	VEL. FPS	FIXTURE UNITS	FLOW, GPM	VEL. FPS	FIXTURE UNITS	FLOW, GPM	VEL. FPS	FIXTURE UNITS	
1/2"	1.5	2.5	1.5	1.5	2.5	1.5	1.5	2.5	---	CPVC - SDR 11
3/4"	4.0	3.2	4.0	4.0	3.2	4.0	4.0	3.2	---	CPVC - SDR 11
1"	7.7	3.7	9.5	7.7	3.7	9.5	7.7	3.7	---	CPVC - SDR 11
1-1/4"	13.1	4.2	18.0	13.1	4.2	18.0	13.1	4.2	---	CPVC - SDR 11
1-1/2"	20.2	4.7	30.5	20.2	4.7	30.5	20.2	4.7	---	CPVC - SDR 11
2"	40.4	5.4	87.5	40.4	5.4	87.5	40.4	5.4	28.5	CPVC - SDR 11
2-1/2"	64.1	5.0	195.5	64.1	5.0	195.5	64.1	5.0	88.5	CPVC - SCHEDULE 80
3"	100.4	5.0	382.0	100.4	5.0	382.0	100.4	5.0	247.0	CPVC - SCHEDULE 80
4"	174.4	5.0	775.0	174.4	5.0	775.0	174.4	5.0	735.0	CPVC - SCHEDULE 80
6"	398.7	5.0	2655.0	398.7	5.0	2655.0	398.7	5.0	2655.0	CPVC - SCHEDULE 80
8"	700.1	5.0	5380.0	700.1	5.0	5380.0	700.1	5.0	5380.0	CPVC - SCHEDULE 80

VERTICAL RISERS & RUNOUTS

Emerald City Engineers, Inc.
21705 Highway 99
Lynnwood, WA 98036

Project Name: 2700 International
Project Number: 2049-008
Edited By: TJP
Edit Date: 7/11/2022

SIZING IS PER 2019 CPC

WATER SUPPLY PIPE SIZING CALCULATION FORM - RISERS & RUNOUTS

AVAILABLE PRESSURE AT TOP OF RISER: 64.0 PSI

STATIC LIFT: 60 FEET = 26.0 PSI

PRESSURE LOSS THROUGH WATER SUBMETER SERVING THE FURTHEST PLUMBING FIXTURE: 5.0 PSI
TYPICALLY 3-5 PSI.

REQUIRED MINIMUM PRESSURE AT FURTHEST UNIT FIXTURE: 25.0 PSI

PRESSURE AVAILABLE TO OFFSET FRICTION LOSSES: 8.0 PSI

PIPING SYSTEM LENGTH FROM SERVICE TO FURTHEST UNIT SUBMETER: 110.0 FEET
FITTING ALLOWANCE: 55.0 FEET

MAXIMUM FRICTION LOSS FACTOR: 4.9 PSI/100 FT

SELECTED FRICTION LOSS FACTOR: 4.9 PSI/100 FT

MAX CW & HW VELOCITY 8 FPS FOR 1/2" - 2".
MAX CW & HW VELOCITY 5 FPS FOR PIPES 2-1/2" & LARGER.

SUPPLY PIPE SIZING SCHEDULE

PIPE SIZE	FLUSH TANK CW			HOT WATER			FLUSH VALVE CW			PIPE MATERIAL
IN	FLOW, GPM	VEL. FPS	FIXTURE UNITS	FLOW, GPM	VEL. FPS	FIXTURE UNITS	FLOW, GPM	VEL. FPS	FIXTURE UNITS	
1/2"	2.0	3.4	3.0	2.0	3.4	3.0	2.0	3.4	---	CPVC - SDR 11
3/4"	5.4	4.3	6.5	5.4	4.3	6.5	5.4	4.3	---	CPVC - SDR 11
1"	10.4	5.0	14.0	10.4	5.0	14.0	10.4	5.0	---	CPVC - SDR 11
1-1/4"	17.7	5.7	25.5	17.7	5.7	25.5	17.7	5.7	---	CPVC - SDR 11
1-1/2"	27.4	6.3	47.0	27.4	6.3	47.0	27.4	6.3	10.5	CPVC - SDR 11
2"	54.6	7.4	149.0	54.6	7.4	149.0	54.6	7.4	59.0	CPVC - SDR 11
2-1/2"	64.1	5.0	195.5	64.1	5.0	195.5	64.1	5.0	88.5	CPVC - SCHEDULE 80
3"	100.4	5.0	382.0	100.4	5.0	382.0	100.4	5.0	247.0	CPVC - SCHEDULE 80

WATER PRESSURE DATA

2/14/22, 4:10 PM EBMUD Fire Service Available Flow and Pressure

EBMUD FIRE SERVICE AVAILABLE FLOW & PRESSURE INFORMATION

Contact Information:
Echo Bergquist
The Unity Council
1900 Fruitvale Ave
Oakland, 94601

Request Number: 7513
E-mail: ebergquist@unitycouncil.org
Phone: 510-518-6137
Cell:
Fax:

Property Information:
2700-2712 International Boulevard
OAKLAND, 94601

The following available flow and pressure information is based on a Maximum Day Demand Hydraulic Model Analysis of EBMUD's water distribution system. This information should be used as a guideline of the approximate available flow. It is recommended that a design allowance be made for possible reductions in pressure and/or flow that could occur under other possible scenarios. Applicant understands that the District cannot guarantee any specific values for pressure and flow. If you have any questions, please contact us at nbo@ebmud.com or call (510)287-1008.

Available flow and pressure at possible fire service connection for above property:

Possible Fire Service Connection #1
Off the 8-inch main (8C32) in International Boulevard, on the north side of International Boulevard, approximately 50 feet east of 27th Street.
Pressure Zone: Central
Connection Point Elevation (feet): 40
Connection Point Static Pressure (psi): 61
Residual Pressure at gpm (psi):
Residual Pressure at 0 gpm (psi): 49
Residual Pressure at 750 gpm (psi): 48
Residual Pressure at 1500 gpm (psi): 44

Possible Fire Service Connection #2
Off the 6-inch main (6C29) in 27th Street, on the east side of 27th Street, approximately 70 feet north of International Boulevard.
Pressure Zone: Central
Connection Point Elevation (feet): 40
Connection Point Static Pressure (psi): 61
Residual Pressure at gpm (psi):
Residual Pressure at 0 gpm (psi): 49
Residual Pressure at 750 gpm (psi): 47
Residual Pressure at 1500 gpm (psi): 43

Possible Fire Service Connection #3
Off the 6-inch main (6C29) in Mitchell Street, on the east side of Mitchell Street, approximately 70 feet north of International Boulevard.
Pressure Zone: Central
Connection Point Elevation (feet): 45
Connection Point Static Pressure (psi): 60
Residual Pressure at gpm (psi):
Residual Pressure at 0 gpm (psi): 48
Residual Pressure at 750 gpm (psi): 46
Residual Pressure at 1500 gpm (psi): 42

Engineer's Comments: The pressure and flow information stated is available at the street main connections in International Boulevard, 27th Street, and Mitchell Street.

Flow and pressure data is valid for one year after the approval date. You will need to submit a new request and pay applicable fee after the expiration date.

NBO: WMACH **Engineer:** DCHIU **Supervisor:** JMCGREGO **Date:** 2022-02-14 11:11:24.0

https://ebmudnet/fsr/customeroutputform.cfm?request_gn=7513 1/2

PYATOK
1611 TELEGRAPH AVE.
SUITE 200
OAKLAND, CA 94612
T. 510.465.7010 | F. 510.465.8575
www.pyatok.com

THE UNITY COUNCIL
1900 FRUITVALE
AVE
#2A
OAKLAND, CA
94601

EMERALD CITY
ENGINEERS, INC
21705 Highway 99 Lynnwood, WA 98036 425-741-1200 tel / 1201 fax

2700 INTERNATIONAL
OAKLAND, CA 94601

STAMP:
REGISTERED PROFESSIONAL ENGINEER
MASSAMAGHAN KONE
EXP. 03-31-24
MECHANICAL
STATE OF CALIFORNIA
12/09/22

ISSUE SCHEDULE

100 SD	5/11/22
50 DD	7/15/22
100 DD	9/16/22
PRICING SET	11/11/22
PERMIT SET	12/09/22

REVISION SCHEDULE

NO.	ISSUE	DATE

JOB NUMBER:	2049-008
DRAWN BY:	TJP
CHECKED BY:	MK
ISSUE DATE:	12/09/2022
SCALE:	
TITLE:	

CALCULATIONS

SHEET:

P0.02

PRELIMINARY - Not for Construction -

© 2019 PYATOK ARCHITECTURE & URBAN DESIGN

4/22/2022 6:28:22 PM

COPYRIGHT 2022, EMERALD CITY ENGINEERS, INC.

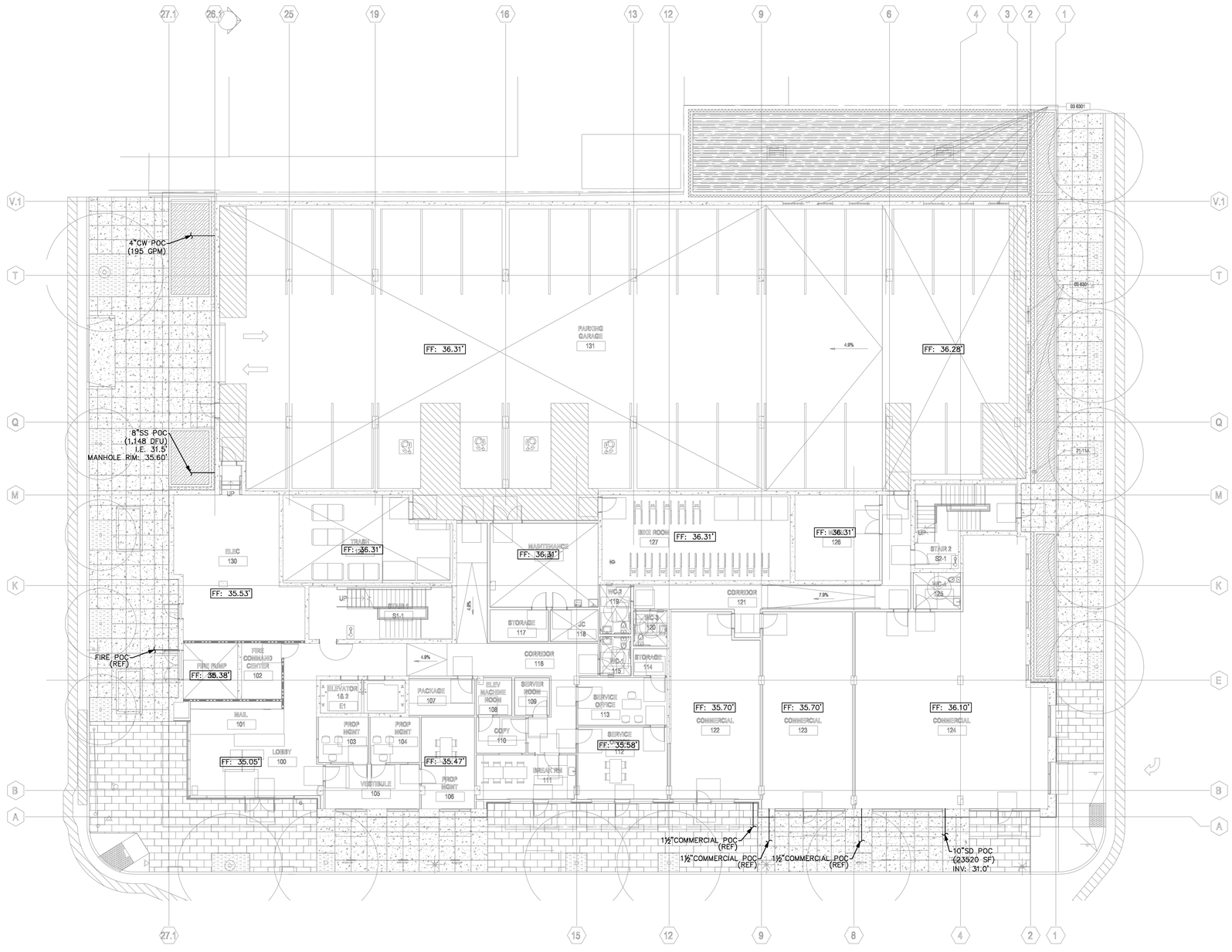

SITE PLAN

SCALE: 1" = 10'

N

PYATOK
1611 TELEGRAPH AVE.
SUITE 200
OAKLAND, CA 94612
T. 510.465.7010 | F. 510.465.8575
www.pyatok.com

THE UNITY COUNCIL
1900 FRUITVALE AVE
#2A
OAKLAND, CA
94601

EMERALD CITY ENGINEERS, INC
21705 Highway 99 Lynnwood, WA
98036 425-741-1200 tel / 1201 fax

2700 INTERNATIONAL

OAKLAND, CA 94601

STAMP:

12/09/22

ISSUE SCHEDULE

100 SD	5/11/22
50 DD	7/15/22
100 DD	9/16/22
PRICING SET	11/11/22
PERMIT SET	12/09/22

REVISION SCHEDULE

NO.	ISSUE	DATE

JOB NUMBER:	2049-008
DRAWN BY:	TJP
CHECKED BY:	MK
ISSUE DATE:	12/09/2022
SCALE:	
TITLE:	SITE PLAN

SHEET:

P1.00

PRELIMINARY - Not for Construction -

© 2019 PYATOK ARCHITECTURE & URBAN DESIGN

4/22/2022 6:28:22 PM

COPYRIGHT 2022, EMERALD CITY ENGINEERS, INC.
T:\PWZ a \2049-008 2700 INTERNATIONAL, OAKLAND, CA\DWG\P100 SITE PLAN.DWG 12-01-2022 12:08

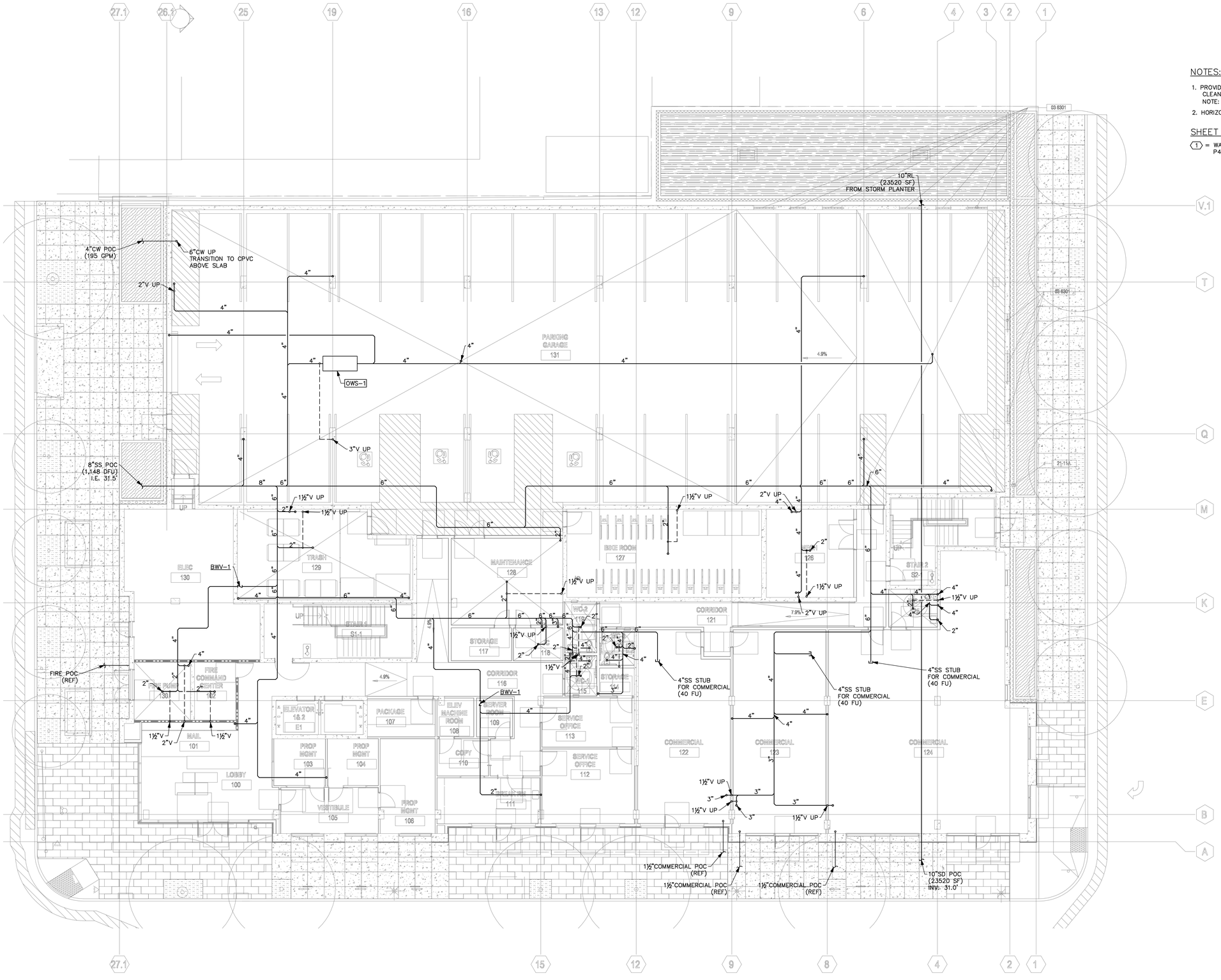

UNDERSLAB

SCALE: 1/8"=1'

N

NOTES:

1. PROVIDE CLEANOUTS PER CURRENT CPC AND AS REQUIRED BY LOCAL JURISDICTIONS. CLEANOUTS SHALL BE IN WALL/FLOORS WHERE THEY ARE NOT HIGHLY VISIBLE. NOTE: NOT ALL CLEANOUTS ARE SHOWN ON THE PLUMBING DRAWINGS.
2. HORIZONTAL WASTE PIPING 4" AND GREATER SHALL SLOPE ⅛" PER L.F. MIN.

SHEET NOTES:

(1) = WASTE/VENT RISER IDENTIFICATION (RISER "1", FOR EXAMPLE). REFER TO DWG P4.00 DETAIL 1 FOR RISER DATAIL/PIPE SIZES.

STORM DRAIN SIZING NOTE

SIZE STORM DRAIN PIPING PER 2019 CPC TABLE 1103.2, AT THE FOLLOWING SLOPES AND RAINFALL RATES:

SLOPE = ⅛" PER FOOT

PIPE SIZE	2.0" PER HOUR	4.0" PER HOUR
3"	1,644 SF	822 SF
4"	3,760 SF	1,880 SF
6"	10,700 SF	5,350 SF
8"	23,000 SF	11,500 SF
10"	41,400 SF	20,700 SF
12"	66,600 SF	33,300 SF
15"	119,000 SF	59,500 SF

PYATOK
1611 TELEGRAPH AVE.
SUITE 200
OAKLAND, CA 94612
T. 510.465.7010 | F. 510.465.8575
www.pyatok.com

THE UNITY COUNCIL
1900 FRUITVALE AVE
#2A
OAKLAND, CA
94601

EMERALD CITY ENGINEERS, INC
21705 Highway 99 Lynnwood, WA
98036 425-741-1200 tel / 1201 fax

2700 INTERNATIONAL

OAKLAND, CA 94601

STAMP:

ISSUE SCHEDULE

100 SD	5/11/22
50 DD	7/15/22
100 DD	9/16/22
PRICING SET	11/11/22
PERMIT SET	12/09/22

REVISION SCHEDULE

NO.	ISSUE	DATE

JOB NUMBER:	2049-008
DRAWN BY:	TJP
CHECKED BY:	MK
ISSUE DATE:	12/09/2022
SCALE:	
TITLE:	**BUILDING PLANS - UNDERSLAB**

SHEET:

P2.00

PRELIMINARY - Not for Construction -

© 2019 PYATOK ARCHITECTURE & URBAN DESIGN

4/22/2022 6:28:22 PM

COPYRIGHT 2022, EMERALD CITY ENGINEERS, INC.
T:\PKE 2\2049-008 2700 INTERNATIONAL, OAKLAND, CA\DWG\P200 - BUILDING PLANS - UNDERSLAB.DWG 12-01-2022 12:07

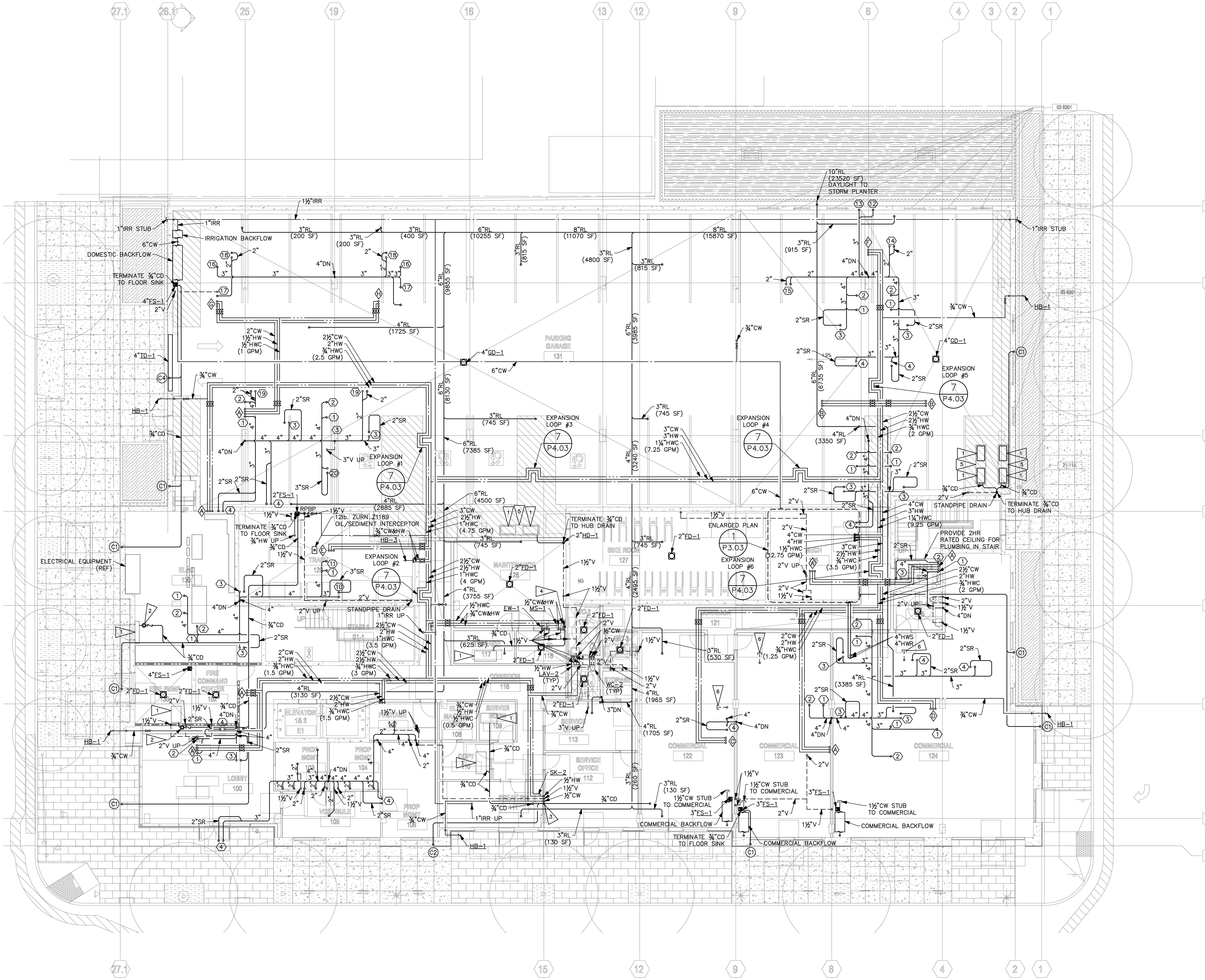

LEVEL 1

SCALE: 1/8"=1'

SHEET NOTES:

⟨1⟩ = WASTE/VENT RISER IDENTIFICATION (RISER "1", FOR EXAMPLE). REFER TO DWG P4.00 DETAIL 1 FOR RISER DATAIL/PIPE SIZES.

◇A = SUPPLY RISER IDENTIFICATION (RISER "A", FOR EXAMPLE). REFER TO DWG P4.01 DETAIL 1.

(C1) = CONDENSATE RISER IDENTIFICATION (RISER "C1", FOR EXAMPLE). REFER TO DWG P4.03 DETAIL 6.

FLAG NOTES:

1. MECHANICAL EQUIPMENT (REF).
2. CONDENSATE PUMP.
3. TERMINATE ¾"CD TO SINK TAILPIECE.
4. TERMINATE ¾"CD TO MOP SINK.
5. HVAC CONTRACTOR SHALL PROVIDE SHEET METAL DRAIN PAN BELOW HEAT PUMPS WITH 3/4" DRAIN CONNECTION. DRAIN PIPING PROVIDED BY PLUMBING CONTRACTOR.
6. 3"V STUB FOR COMMERCIAL SPACE. (40 FU)

STORM DRAIN SIZING NOTE

SIZE STORM DRAIN PIPING PER 2019 CPC TABLE 1103.2, AT THE FOLLOWING SLOPES AND RAINFALL RATES:

SLOPE = ⅛" PER FOOT

PIPE SIZE	2.0" PER HOUR	4.0" PER HOUR
3"	1,644 SF	822 SF
4"	3,760 SF	1,880 SF
6"	10,700 SF	5,350 SF
8"	23,000 SF	11,500 SF
10"	41,400 SF	20,700 SF
12"	66,600 SF	33,300 SF
15"	119,000 SF	59,500 SF

HWC PIPE SIZING

HOT WATER CIRC. PIPING IS SIZED FOR 4FT PER 100 FT AND 5 FPS. MAXIMUM FIXTURE UNITS FOR PIPES ARE AS FOLLOWS:

½" PIPE: 1 GPM	1½" PIPE: 15 GPM
¾" PIPE: 3 GPM	2" PIPE: 31 GPM
1" PIPE: 6 GPM	2½" PIPE: 65 GPM
1¼" PIPE: 10 GPM	

PYATOK
1611 TELEGRAPH AVE.
SUITE 200
OAKLAND, CA 94612
T. 510.465.7010 | F. 510.465.8575
www.pyatok.com

THE UNITY COUNCIL
1900 FRUITVALE AVE
#2A
OAKLAND, CA 94601

EMERALD CITY ENGINEERS, INC
21705 Highway 99 Lynnwood, WA 98036 425-741-1200 tel / 1201 fax

2700 INTERNATIONAL

OAKLAND, CA 94601

STAMP:

12/09/22

ISSUE SCHEDULE

100 SD	5/11/22
50 DD	7/15/22
100 DD	9/16/22
PRICING SET	11/11/22
PERMIT SET	12/09/22

REVISION SCHEDULE

NO.	ISSUE	DATE

JOB NUMBER: 2049-008
DRAWN BY: TJP
CHECKED BY: MK
ISSUE DATE: 12/09/2022
SCALE:
TITLE:

BUILDING PLANS - LEVEL 1

SHEET:

P2.01

PRELIMINARY - Not for Construction -

© 2019 PYATOK ARCHITECTURE & URBAN DESIGN

COPYRIGHT 2022, EMERALD CITY ENGINEERS, INC.

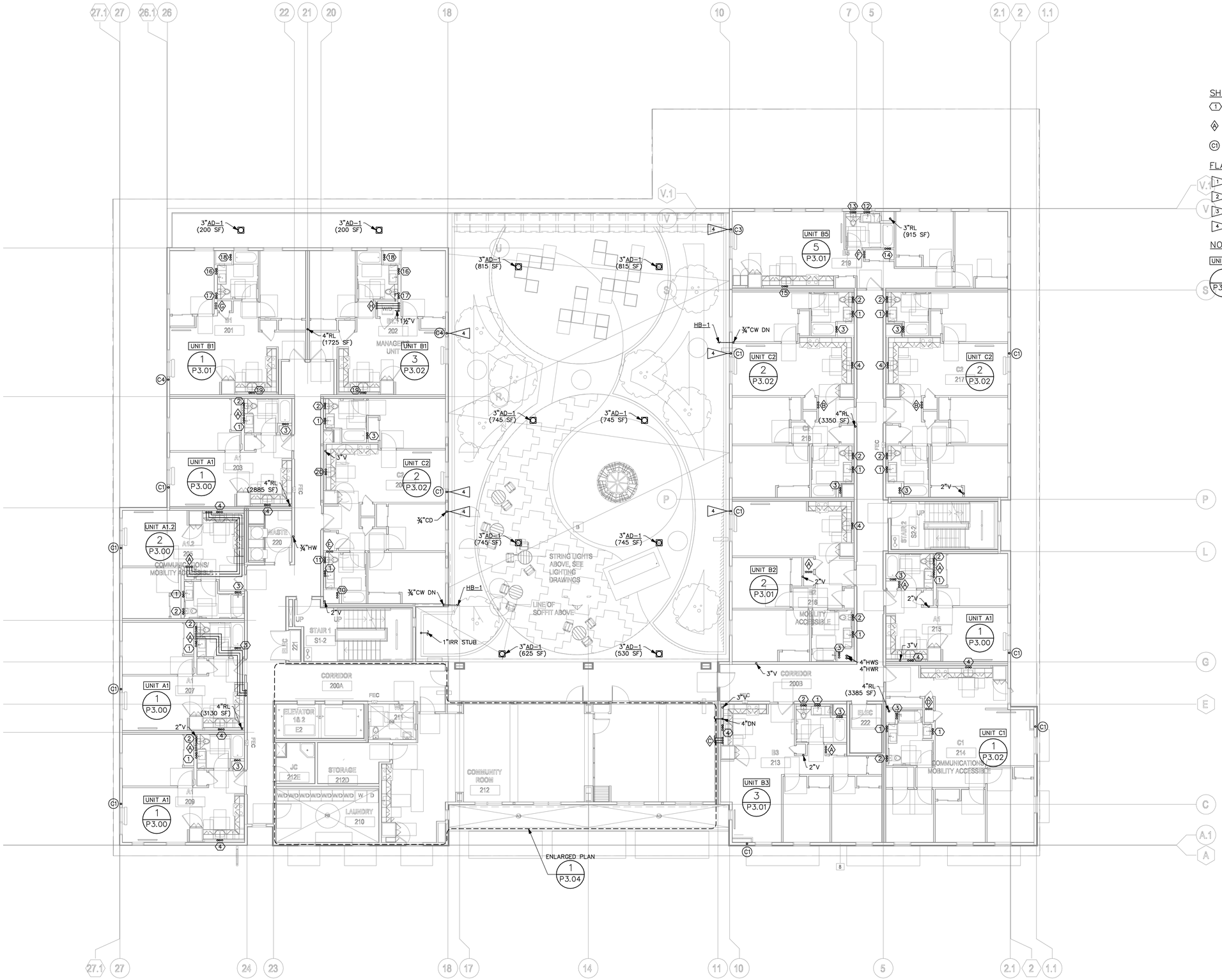

LEVEL 2

SCALE: 1/8"=1'

SHEET NOTES:

1 = WASTE/VENT RISER IDENTIFICATION (RISER "1", FOR EXAMPLE). REFER TO DWG P4.00 DETAIL 1 FOR RISER DATAIL/PIPE SIZES.

A = SUPPLY RISER IDENTIFICATION (RISER "A", FOR EXAMPLE). REFER TO DWG P4.01 DETAIL 1.

C1 = CONDENSATE RISER IDENTIFICATION (RISER "C1", FOR EXAMPLE). REFER TO DWG P4.03 DETAIL 6.

FLAG NOTES:

1 MECHANICAL EQUIPMENT (REF).

2 CONDENSATE PUMP.

3 TERMINATE ¾"CD TO SINK TAILPIECE.

4 TERMINATE ¾"CD TO LANDSCAPE.

NOTES:

UNIT A1 = UNIT TYPE. UNIT TYPE A1 FOR EXAMPLE.

1 / P3.00 = ENLARGED PLAN. FOR EXAMPLE, REFER TO DETAIL 1 ON P3.00.

STORM DRAIN SIZING NOTE

SIZE STORM DRAIN PIPING PER 2019 CPC TABLE 1103.2, AT THE FOLLOWING SLOPES AND RAINFALL RATES:

SLOPE = ⅛" PER FOOT

PIPE SIZE	2.0" PER HOUR	4.0" PER HOUR
3"	1,644 SF	822 SF
4"	3,760 SF	1,880 SF
6"	10,700 SF	5,350 SF
8"	23,000 SF	11,500 SF
10"	41,400 SF	20,700 SF
12"	66,600 SF	33,300 SF
15"	119,000 SF	59,500 SF

PYATOK
1611 TELEGRAPH AVE.
SUITE 200
OAKLAND, CA 94612
T. 510.465.7010 | F. 510.465.8575
www.pyatok.com

THE UNITY COUNCIL
1900 FRUITVALE AVE
#2A
OAKLAND, CA 94601

EMERALD CITY ENGINEERS, INC
21705 Highway 99 Lynnwood, WA 98036 425-741-1200 tel / 1201 fax

2700 INTERNATIONAL

OAKLAND, CA 94601

STAMP:

REGISTERED PROFESSIONAL ENGINEER MASSAMAGHAN KOMAR NO. EXP. 03-31-24 MECHANICAL STATE OF CALIFORNIA

12/09/22

ISSUE SCHEDULE

100 SD	5/11/22
50 DD	7/15/22
100 DD	9/16/22
PRICING SET	11/11/22
PERMIT SET	12/09/22

REVISION SCHEDULE

NO.	ISSUE	DATE

JOB NUMBER:	2049-008
DRAWN BY:	TJP
CHECKED BY:	MK
ISSUE DATE:	12/09/2022
SCALE:	
TITLE:	BUILDING PLANS - LEVEL 2

SHEET:

P2.02

PRELIMINARY - Not for Construction -

© 2019 PYATOK ARCHITECTURE & URBAN DESIGN

COPYRIGHT 2022, EMERALD CITY ENGINEERS, INC.
TPIKE J:\2049-008 2700 INTERNATIONAL, OAKLAND, CA\DWG\P202 - BUILDING PLANS - LEVEL 2.DWG 12-01-2022 12:07

4/22/2022 6:28:22 PM

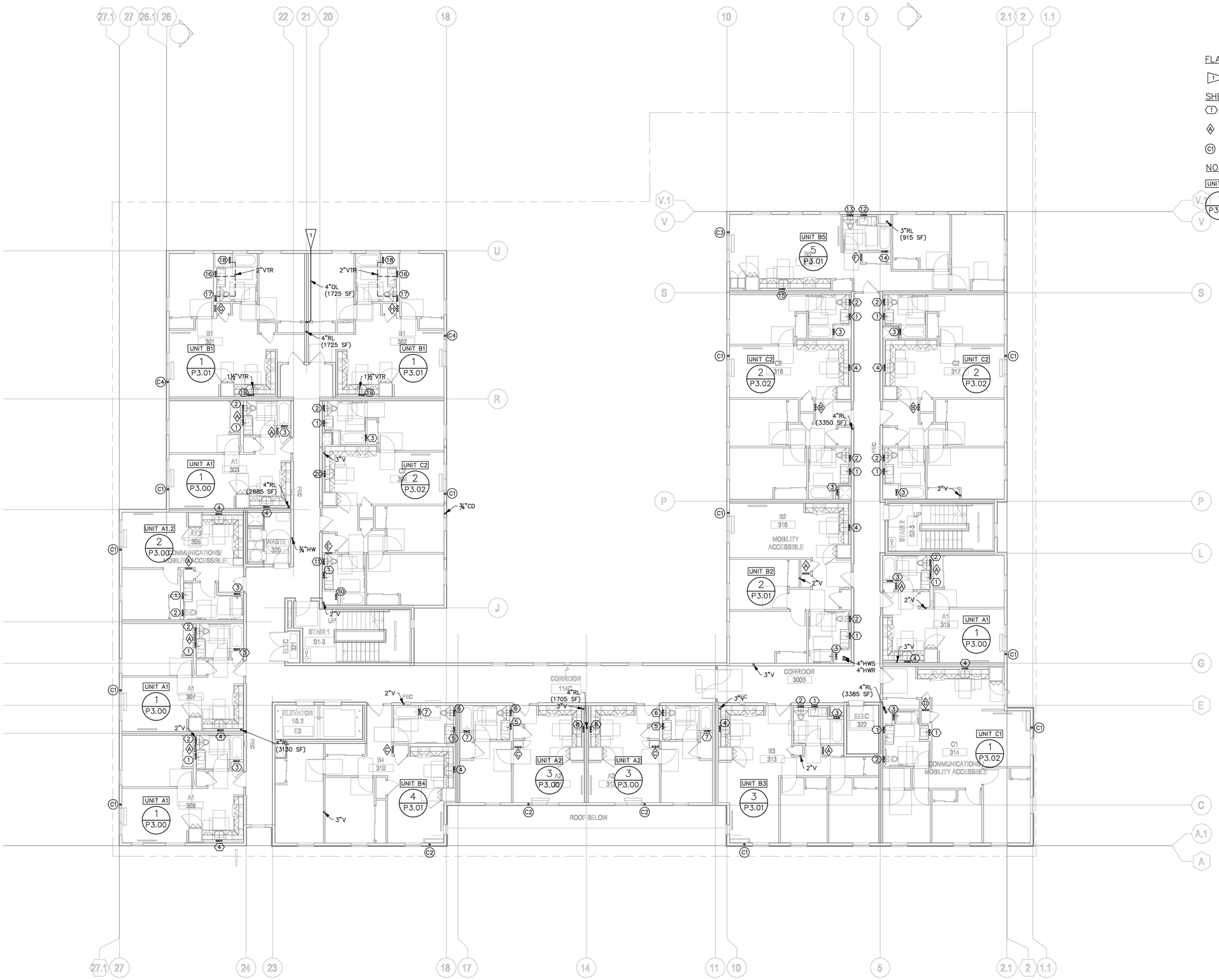

LEVEL 3

SCALE: 1/8"=1'

FLAG NOTES:

1 DAYLIGHT OL WITH JAY R. SMITH 1770 DOWNSPOUT NOZZLE OR EQUAL

SHEET NOTES:

1 = WASTE/VENT RISER IDENTIFICATION (RISER "1", FOR EXAMPLE). REFER TO DWG P4.00 DETAIL 1 FOR RISER DATAIL/PIPE SIZES.

A = SUPPLY RISER IDENTIFICATION (RISER "A", FOR EXAMPLE). REFER TO DWG P4.01 DETAIL 1.

C1 = CONDENSATE RISER IDENTIFICATION (RISER "C1", FOR EXAMPLE). REFER TO DWG P4.03 DETAIL 6.

NOTES:

UNIT A1 = UNIT TYPE. UNIT TYPE A1 FOR EXAMPLE.

1 / P3.00 = ENLARGED PLAN. FOR EXAMPLE, REFER TO DETAIL 1 ON P3.00.

STORM DRAIN SIZING NOTE

SIZE STORM DRAIN PIPING PER 2019 CPC TABLE 1103.2, AT THE FOLLOWING SLOPES AND RAINFALL RATES:

SLOPE = 1/8" PER FOOT

PIPE SIZE	2.0" PER HOUR	4.0" PER HOUR
3"	1,644 SF	822 SF
4"	3,760 SF	1,880 SF
6"	10,700 SF	5,350 SF
8"	23,000 SF	11,500 SF
10"	41,400 SF	20,700 SF
12"	66,600 SF	33,300 SF
15"	119,000 SF	59,500 SF

PYATOK
1611 TELEGRAPH AVE.
SUITE 200
OAKLAND, CA 94612
T. 510.465.7010 | F. 510.465.8575
www.pyatok.com

THE UNITY COUNCIL
1900 FRUITVALE AVE
#2A
OAKLAND, CA 94601

EMERALD CITY ENGINEERS, INC
21705 Highway 99 Lynnwood, WA 98036 425-741-1200 tel / 1201 fax

2700 INTERNATIONAL

OAKLAND, CA 94601

STAMP:

REGISTERED PROFESSIONAL ENGINEER MASSAMAGHAN KOMAR NO. 22948 EXP. 03-31-24 MECHANICAL STATE OF CALIFORNIA

12/09/22

ISSUE SCHEDULE

100 SD	5/11/22
50 DD	7/15/22
100 DD	9/16/22
PRICING SET	11/11/22
PERMIT SET	12/09/22

REVISION SCHEDULE

NO.	ISSUE	DATE

JOB NUMBER:	2049-008
DRAWN BY:	TJP
CHECKED BY:	MK
ISSUE DATE:	12/09/2022
SCALE:	
TITLE:	BUILDING PLANS - LEVEL 3

SHEET:

P2.03

PRELIMINARY - Not for Construction -

© 2019 PYATOK ARCHITECTURE & URBAN DESIGN

4/22/2022 6:28:22 PM

COPYRIGHT 2022, EMERALD CITY ENGINEERS, INC.
TPIKE J:\2049-008 2700 INTERNATIONAL, OAKLAND, CA\DWG\P203 - BUILDING PLANS - LEVEL 3.DWG 12-01-2022 12:07

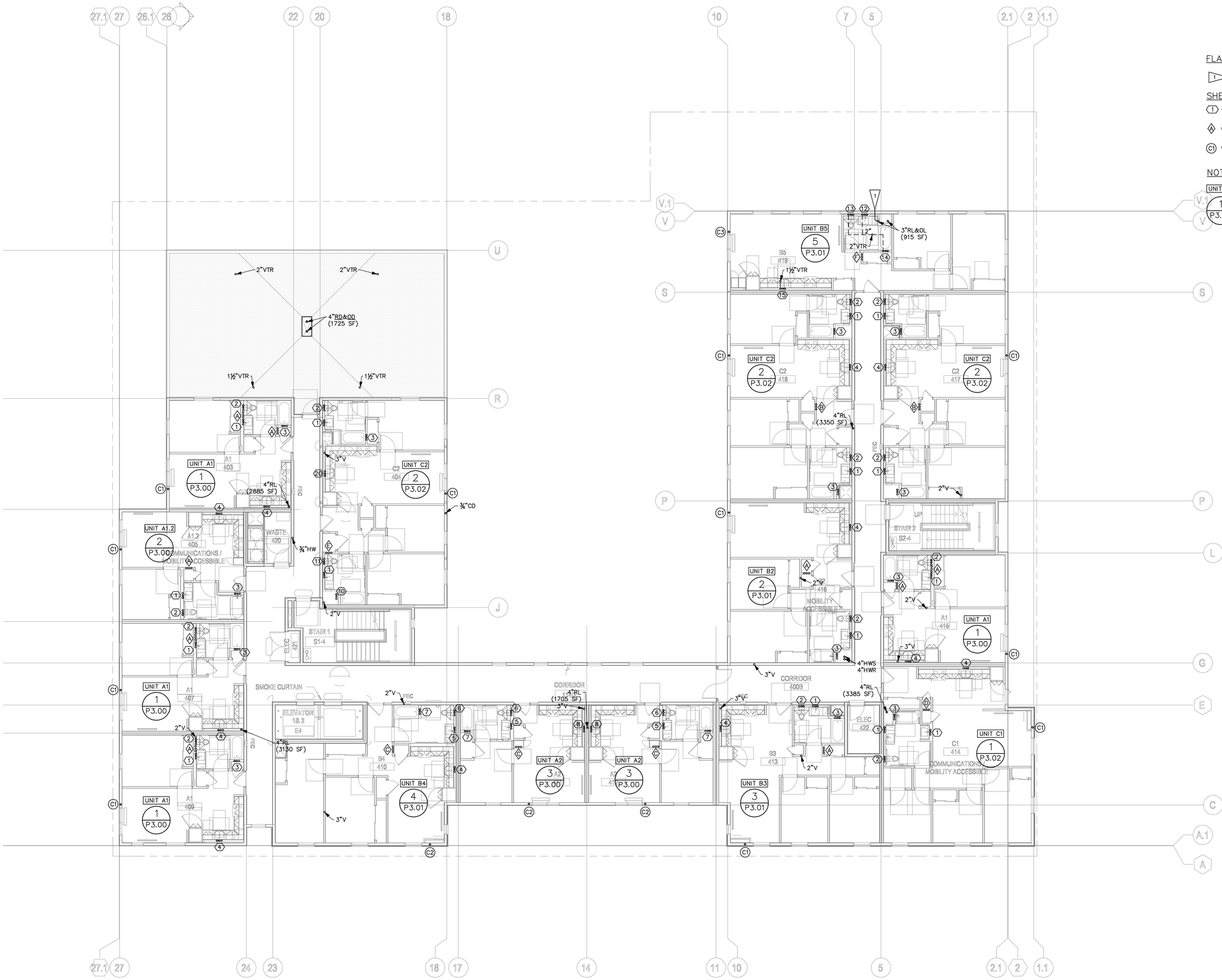

LEVEL 4

SCALE: 1/8"=1'

N

FLAG NOTES:

1 DAYLIGHT OL WITH JAY R. SMITH 1770 DOWNSPOUT NOZZLE OR EQUAL

SHEET NOTES:

1 = WASTE/VENT RISER IDENTIFICATION (RISER "1", FOR EXAMPLE). REFER TO DWG P4.00 DETAIL 1 FOR RISER DATAIL/PIPE SIZES.

A = SUPPLY RISER IDENTIFICATION (RISER "A", FOR EXAMPLE). REFER TO DWG P4.01 DETAIL 1.

C1 = CONDENSATE RISER IDENTIFICATION (RISER "C1", FOR EXAMPLE). REFER TO DWG P4.03 DETAIL 6.

NOTES:

UNIT A1 = UNIT TYPE. UNIT TYPE A1 FOR EXAMPLE.

1 / P3.00 = ENLARGED PLAN. FOR EXAMPLE, REFER TO DETAIL 1 ON P3.00.

STORM DRAIN SIZING NOTE

SIZE STORM DRAIN PIPING PER 2019 CPC TABLE 1103.2, AT THE FOLLOWING SLOPES AND RAINFALL RATES:

SLOPE = ⅛" PER FOOT

PIPE SIZE	2.0" PER HOUR	4.0" PER HOUR
3"	1,644 SF	822 SF
4"	3,760 SF	1,880 SF
6"	10,700 SF	5,350 SF
8"	23,000 SF	11,500 SF
10"	41,400 SF	20,700 SF
12"	66,600 SF	33,300 SF
15"	119,000 SF	59,500 SF

PYATOK
1611 TELEGRAPH AVE.
SUITE 200
OAKLAND, CA 94612
T. 510.465.7010 | F. 510.465.8575
www.pyatok.com

THE UNITY COUNCIL
1900 FRUITVALE AVE
#2A
OAKLAND, CA 94601

EMERALD CITY ENGINEERS, INC
21705 Highway 99 Lynnwood, WA 98036 425-741-1200 tel / 1201 fax

2700 INTERNATIONAL

OAKLAND, CA 94601

STAMP:

REGISTERED PROFESSIONAL ENGINEER
MASSAMAGHAN KOMAR
NO. 12-08
EXP. 03-31-24
MECHANICAL
STATE OF CALIFORNIA
12/09/22

ISSUE SCHEDULE

100 SD	5/11/22
50 DD	7/15/22
100 DD	9/16/22
PRICING SET	11/11/22
PERMIT SET	12/09/22

REVISION SCHEDULE

NO.	ISSUE	DATE

JOB NUMBER:	2049-008
DRAWN BY:	TJP
CHECKED BY:	MK
ISSUE DATE:	12/09/2022
SCALE:	
TITLE:	BUILDING PLANS - LEVEL 4

SHEET:

P2.04

PRELIMINARY - Not for Construction -

© 2019 PYATOK ARCHITECTURE & URBAN DESIGN

COPYRIGHT 2022, EMERALD CITY ENGINEERS, INC.
TPIKE J:\2049-008 2700 INTERNATIONAL, OAKLAND, CA\DWG\P204 - BUILDING PLANS - LEVEL 4.DWG 12-01-2022 12:06

4/22/2022 6:28:22 PM

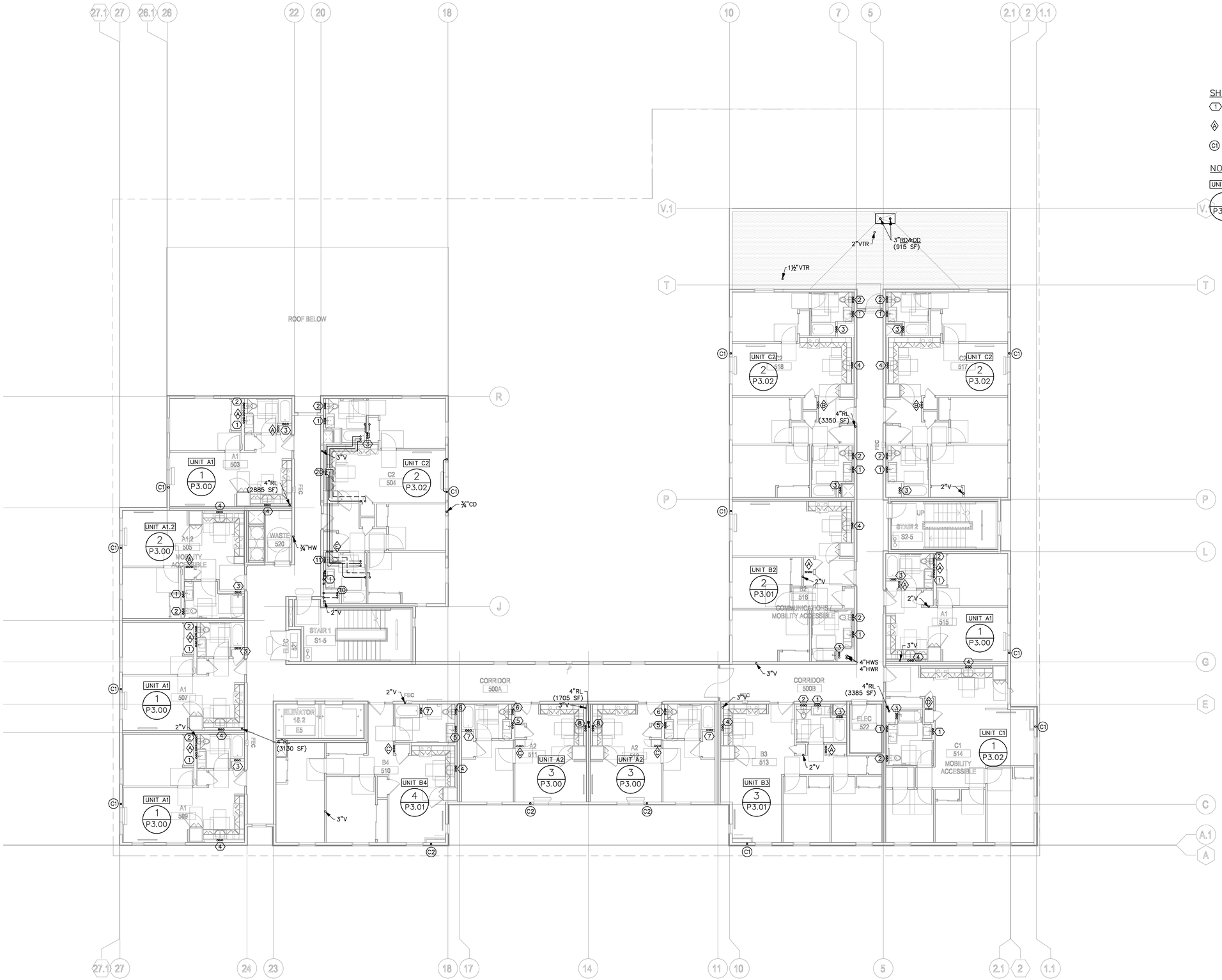

LEVEL 5

SCALE: 1/8"=1'

SHEET NOTES:

1 = WASTE/VENT RISER IDENTIFICATION (RISER "1", FOR EXAMPLE). REFER TO DWG P4.00 DETAIL 1 FOR RISER DATAIL/PIPE SIZES.

A = SUPPLY RISER IDENTIFICATION (RISER "A", FOR EXAMPLE). REFER TO DWG P4.01 DETAIL 1.

C1 = CONDENSATE RISER IDENTIFICATION (RISER "C1", FOR EXAMPLE). REFER TO DWG P4.03 DETAIL 6.

NOTES:

UNIT A1 = UNIT TYPE. UNIT TYPE A1 FOR EXAMPLE.

1 / P3.00 = ENLARGED PLAN. FOR EXAMPLE, REFER TO DETAIL 1 ON P3.00.

STORM DRAIN SIZING NOTE

SIZE STORM DRAIN PIPING PER 2019 CPC TABLE 1103.2, AT THE FOLLOWING SLOPES AND RAINFALL RATES:

SLOPE = 1/8" PER FOOT

PIPE SIZE	2.0" PER HOUR	4.0" PER HOUR
3"	1,644 SF	822 SF
4"	3,760 SF	1,880 SF
6"	10,700 SF	5,350 SF
8"	23,000 SF	11,500 SF
10"	41,400 SF	20,700 SF
12"	66,600 SF	33,300 SF
15"	119,000 SF	59,500 SF

PYATOK
1611 TELEGRAPH AVE.
SUITE 200
OAKLAND, CA 94612
T. 510.465.7010 | F. 510.465.8575
www.pyatok.com

THE UNITY COUNCIL
1900 FRUITVALE AVE
#2A
OAKLAND, CA 94601

EMERALD CITY ENGINEERS, INC
21705 Highway 99 Lynnwood, WA 98036 425-741-1200 tel / 1201 fax

2700 INTERNATIONAL

OAKLAND, CA 94601

STAMP:

REGISTERED PROFESSIONAL ENGINEER MASSAMAGHAN KOMAR NO. EXP. 03-31-24 MECHANICAL STATE OF CALIFORNIA

12/09/22

ISSUE SCHEDULE

100 SD	5/11/22
50 DD	7/15/22
100 DD	9/16/22
PRICING SET	11/11/22
PERMIT SET	12/09/22

REVISION SCHEDULE

NO.	ISSUE	DATE

JOB NUMBER:	2049-008
DRAWN BY:	TJP
CHECKED BY:	MK
ISSUE DATE:	12/09/2022
SCALE:	
TITLE:	BUILDING PLANS - LEVEL 5

SHEET:

P2.05

PRELIMINARY - Not for Construction -

© 2019 PYATOK ARCHITECTURE & URBAN DESIGN

4/22/2022 6:28:22 PM

COPYRIGHT 2022, EMERALD CITY ENGINEERS, INC.
TPIKE J:\2049-008 2700 INTERNATIONAL, OAKLAND, CA\DWG\P205 - BUILDING PLANS - LEVEL 5.DWG 12-01-2022 12:06

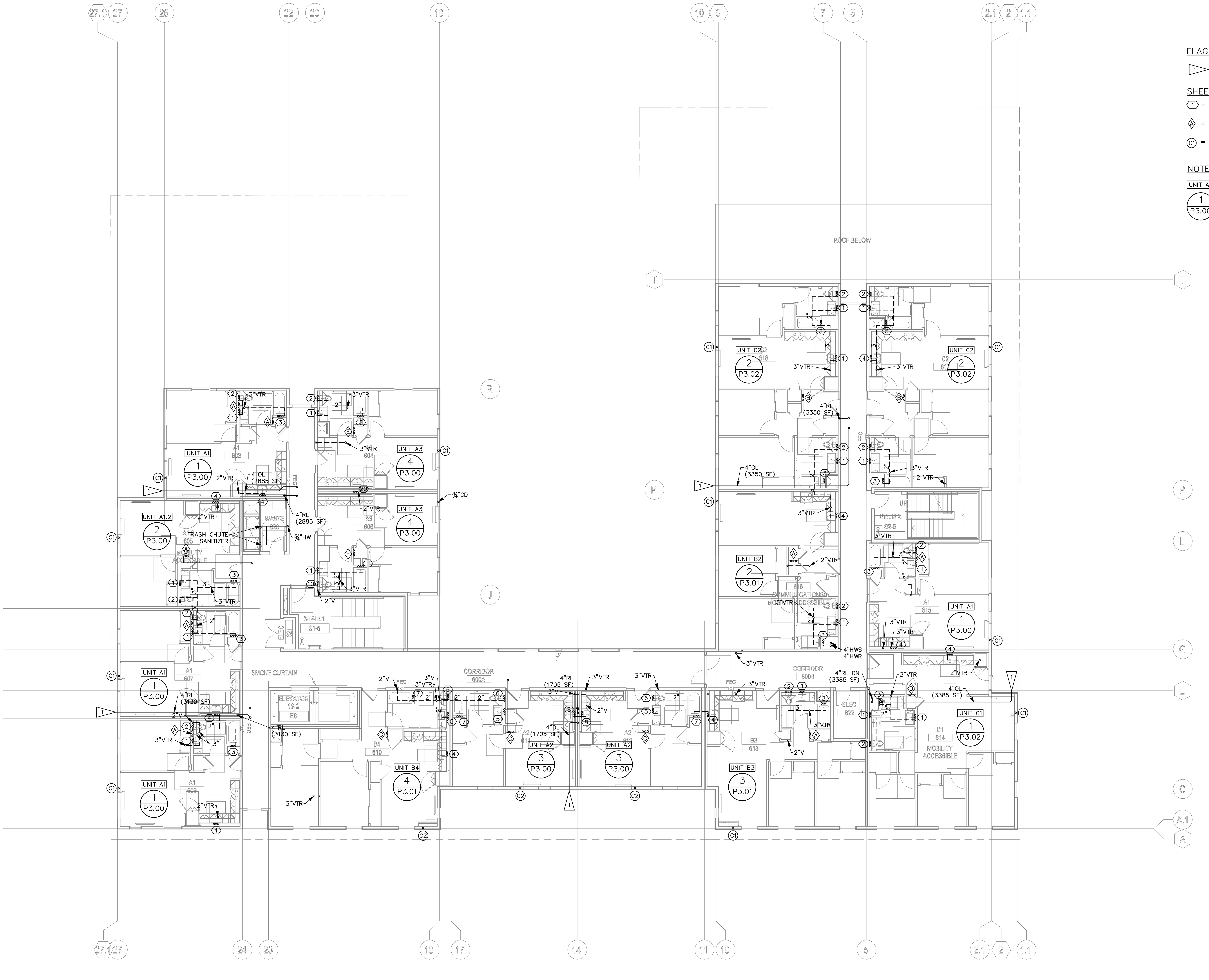

LEVEL 6

SCALE: 1/8"=1'

FLAG NOTES:

1 — DAYLIGHT OL WITH JAY R. SMITH 1770 DOWNSPOUT NOZZLE OR EQUAL

SHEET NOTES:

1 = WASTE/VENT RISER IDENTIFICATION (RISER "1", FOR EXAMPLE). REFER TO DWG P4.00 DETAIL 1 FOR RISER DATAIL/PIPE SIZES.

A = SUPPLY RISER IDENTIFICATION (RISER "A", FOR EXAMPLE). REFER TO DWG P4.01 DETAIL 1.

C1 = CONDENSATE RISER IDENTIFICATION (RISER "C1", FOR EXAMPLE). REFER TO DWG P4.03 DETAIL 6.

NOTES:

UNIT A1 = UNIT TYPE. UNIT TYPE A1 FOR EXAMPLE.

1 / P3.00 = ENLARGED PLAN. FOR EXAMPLE, REFER TO DETAIL 1 ON P3.00.

STORM DRAIN SIZING NOTE

SIZE STORM DRAIN PIPING PER 2019 CPC TABLE 1103.2, AT THE FOLLOWING SLOPES AND RAINFALL RATES:

SLOPE = ⅛" PER FOOT

PIPE SIZE	2.0" PER HOUR	4.0" PER HOUR
3"	1,644 SF	822 SF
4"	3,760 SF	1,880 SF
6"	10,700 SF	5,350 SF
8"	23,000 SF	11,500 SF
10"	41,400 SF	20,700 SF
12"	66,600 SF	33,300 SF
15"	119,000 SF	59,500 SF

PYATOK
1611 TELEGRAPH AVE.
SUITE 200
OAKLAND, CA 94612
T. 510.465.7010 | F. 510.465.8575
www.pyatok.com

THE UNITY COUNCIL
1900 FRUITVALE AVE
#2A
OAKLAND, CA
94601

EMERALD CITY ENGINEERS, INC
21705 Highway 99 Lynnwood, WA 98036 425-741-1200 tel / 1201 fax

2700 INTERNATIONAL
OAKLAND, CA 94601

STAMP:
REGISTERED PROFESSIONAL ENGINEER MASSAMAGHAN KONI No. M 38848 EXP. 03-31-24 MECHANICAL STATE OF CALIFORNIA
12/09/22

ISSUE SCHEDULE

100 SD	5/11/22
50 DD	7/15/22
100 DD	9/16/22
PRICING SET	11/11/22
PERMIT SET	12/09/22

REVISION SCHEDULE

NO.	ISSUE	DATE

JOB NUMBER: 2049-008
DRAWN BY: TJP
CHECKED BY: MK
ISSUE DATE: 12/09/2022
SCALE:
TITLE:
BUILDING PLANS - LEVEL 6

SHEET:
P2.06

PRELIMINARY - Not for Construction -

© 2019 PYATOK ARCHITECTURE & URBAN DESIGN

COPYRIGHT 2022, EMERALD CITY ENGINEERS, INC.
TPKE J:\2049-008 2700 INTERNATIONAL, OAKLAND, CA\DWG\P206 - BUILDING PLANS - LEVEL 6.DWG 12-01-2022 12:06

4/22/2022 6:28:22 PM

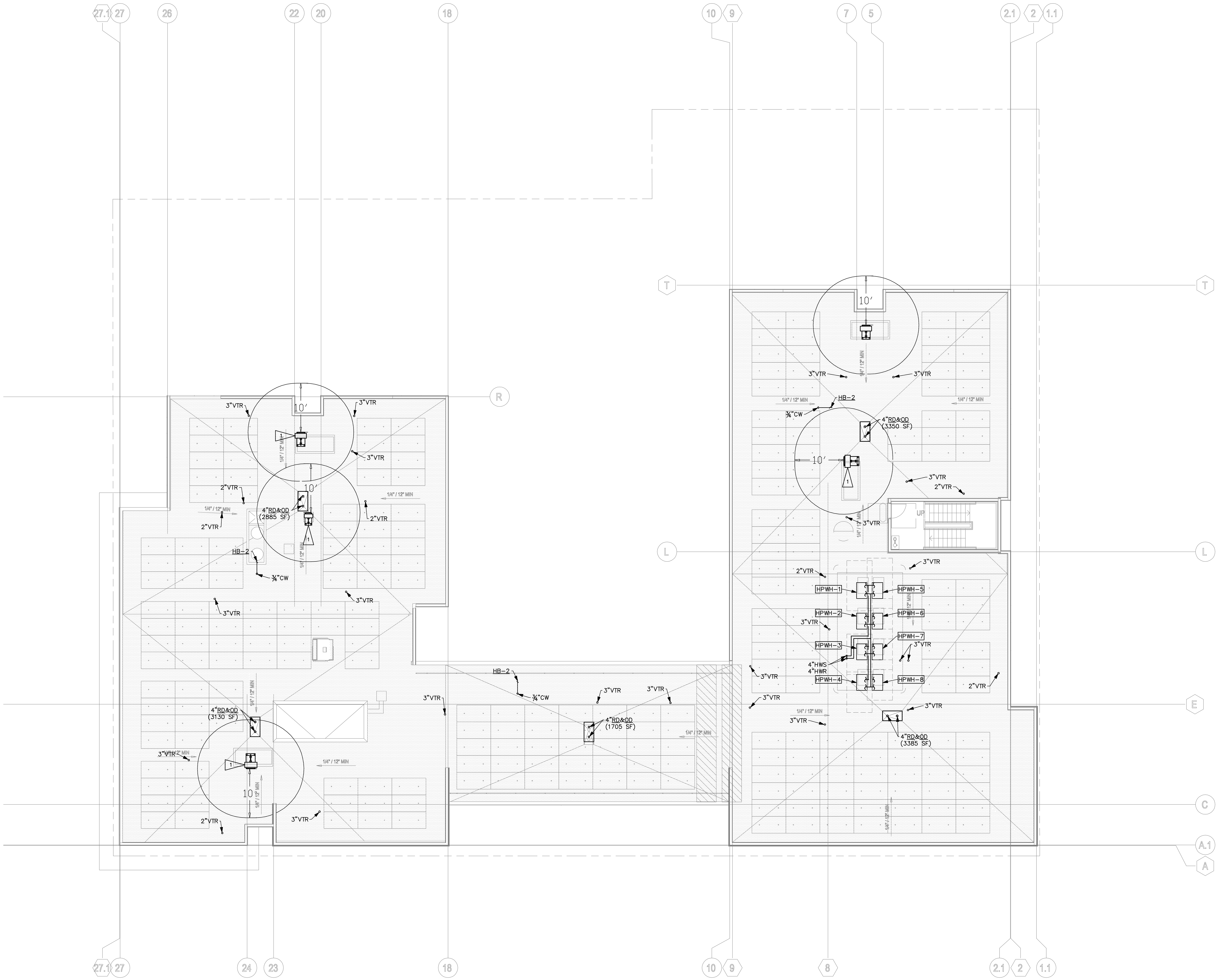

ROOF

SCALE: 1/8"=1'

N

FLAG NOTES:

1 — MECHANICAL EQUIPMENT (REF)

STORM DRAIN SIZING NOTE

SIZE STORM DRAIN PIPING PER 2019 CPC TABLE 1103.2, AT THE FOLLOWING SLOPES AND RAINFALL RATES:

SLOPE = ⅛" PER FOOT

PIPE SIZE	2.0" PER HOUR	4.0" PER HOUR
3"	1,644 SF	822 SF
4"	3,760 SF	1,880 SF
6"	10,700 SF	5,350 SF
8"	23,000 SF	11,500 SF
10"	41,400 SF	20,700 SF
12"	66,600 SF	33,300 SF
15"	119,000 SF	59,500 SF

PYATOK
1611 TELEGRAPH AVE.
SUITE 200
OAKLAND, CA 94612
T. 510.465.7010 | F. 510.465.8575
www.pyatok.com

THE UNITY COUNCIL
1900 FRUITVALE AVE
#2A
OAKLAND, CA
94601

EMERALD CITY ENGINEERS, INC
21705 Highway 99 Lynnwood, WA 98036 425-741-1200 tel / 1201 fax

2700 INTERNATIONAL
OAKLAND, CA 94601

STAMP:

REGISTERED PROFESSIONAL ENGINEER
MASSAMAGHAN KONI
EXP. 03-31-24
MECHANICAL
STATE OF CALIFORNIA
12/09/22

ISSUE SCHEDULE

100 SD	5/11/22
50 DD	7/15/22
100 DD	9/16/22
PRICING SET	11/11/22
PERMIT SET	12/09/22

REVISION SCHEDULE

NO.	ISSUE	DATE

JOB NUMBER: 2049-008
DRAWN BY: TJP
CHECKED BY: MK
ISSUE DATE: 12/09/2022
SCALE:
TITLE:

BUILDING PLANS - ROOF

SHEET:

P2.07

PRELIMINARY - Not for Construction -

© 2019 PYATOK ARCHITECTURE & URBAN DESIGN

4/22/2022 6:28:22 PM

COPYRIGHT 2022, EMERALD CITY ENGINEERS, INC.

TPIKE J:\2049-008 2700 INTERNATIONAL, OAKLAND, CA\DWG\P207 - BULDING PLANS - ROOF.DWG 12-01-2022 12:06

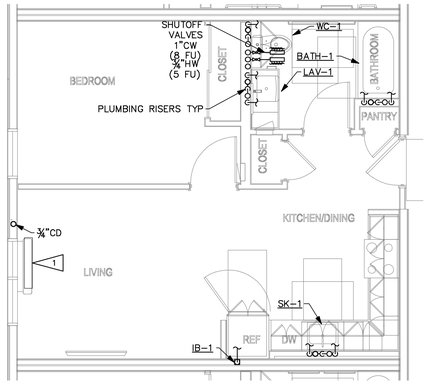

UNIT TYPE A1 (1 / P3.00)
SCALE: 1/4" = 1'-0"

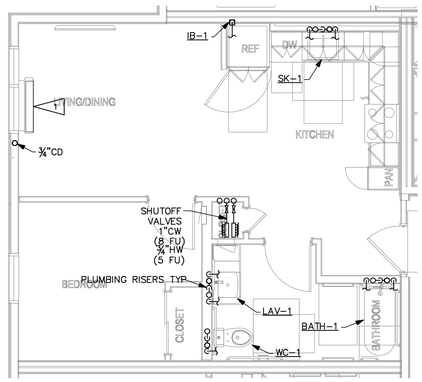

UNIT TYPE A1.2 – MOBILITY (2 / P3.00)
SCALE: 1/4" = 1'-0"

FLAG NOTES:

1 MECHANICAL EQUIPMENT. REFERENCE MECH. DWGS.

SHEET NOTES:

	WATER CONNECTION TABLE	
	COLD WATER	HOT WATER
LAV	1/2" (0.75 FU)	1/2" (0.75 FU)
WC	1/2" (2.5 FU)	–
BATH	1/2" (3.0 FU)	1/2" (3.0 FU)
SK	1/2" (1.25 FU)	1/2" (1.25 FU)
WB	1/2" (3.0 FU)	1/2" (3.0 FU)
IB	1/2" (0 FU)	–

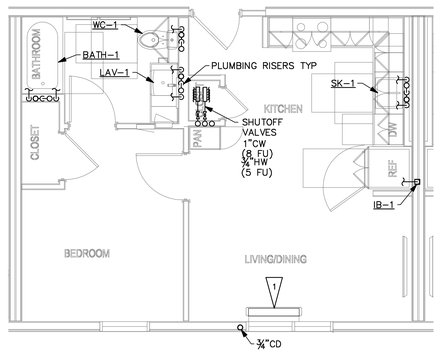

UNIT TYPE A2 (3 / P3.00)
SCALE: 1/4" = 1'-0"

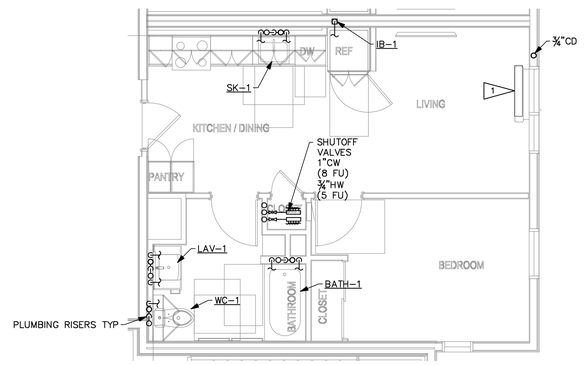

UNIT TYPE A3 (4 / P3.00)
SCALE: 1/4" = 1'-0"

PYATOK
1611 TELEGRAPH AVE.
SUITE 200
OAKLAND, CA 94612
T. 510.465.7010 | F. 510.465.8575
www.pyatok.com

THE UNITY COUNCIL
1900 FRUITVALE AVE
#2A
OAKLAND, CA 94601

EMERALD CITY ENGINEERS, INC
21705 Highway 99 Lynnwood, WA 98036 425-741-1200 tel / 1201 fax

2700 INTERNATIONAL
OAKLAND, CA 94601

STAMP:
REGISTERED PROFESSIONAL ENGINEER
MASSAMAGHAN KOMAR
NO. 12-09-22
EXP. 03-31-24
MECHANICAL
STATE OF CALIFORNIA
12/09/22

ISSUE SCHEDULE

100 SD	5/11/22
50 DD	7/15/22
100 DD	9/16/22
PRICING SET	11/11/22
PERMIT SET	12/09/22

REVISION SCHEDULE

NO.	ISSUE	DATE

JOB NUMBER:	2049-008
DRAWN BY:	TJP
CHECKED BY:	MK
ISSUE DATE:	12/09/2022
SCALE:	
TITLE:	

ENLARGED UNIT PLANS

SHEET:

P3.00

PRELIMINARY - Not for Construction -

© 2019 PYATOK ARCHITECTURE & URBAN DESIGN

4/22/2022 6:28:22 PM

COPYRIGHT 2022, EMERALD CITY ENGINEERS, INC.
TPWE J:\2049-008 2700 INTERNATIONAL, OAKLAND, CA\DWG\P300 – ENLARGED UNIT PLANS.DWG 12-01-2022 12:05

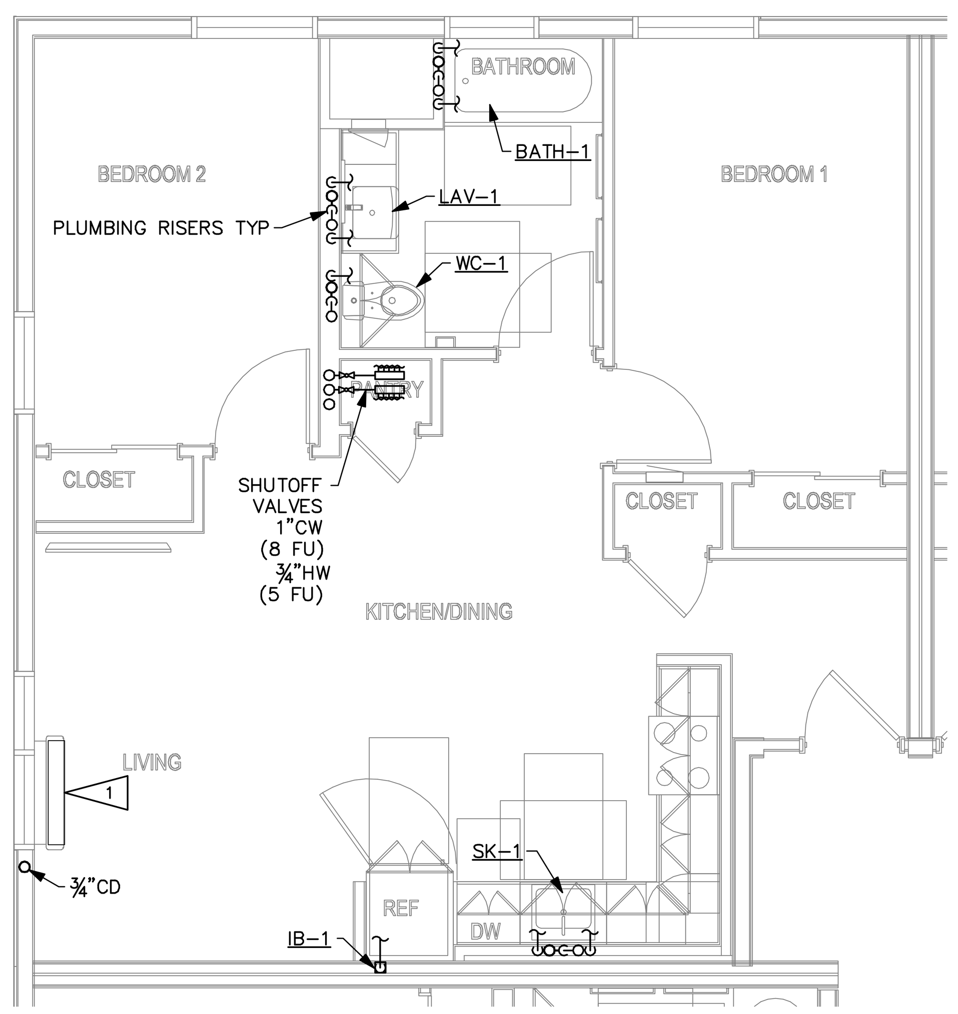

UNIT TYPE B1 – MOBILITY (1 / P3.01)
SCALE: 1/4" = 1'-0"

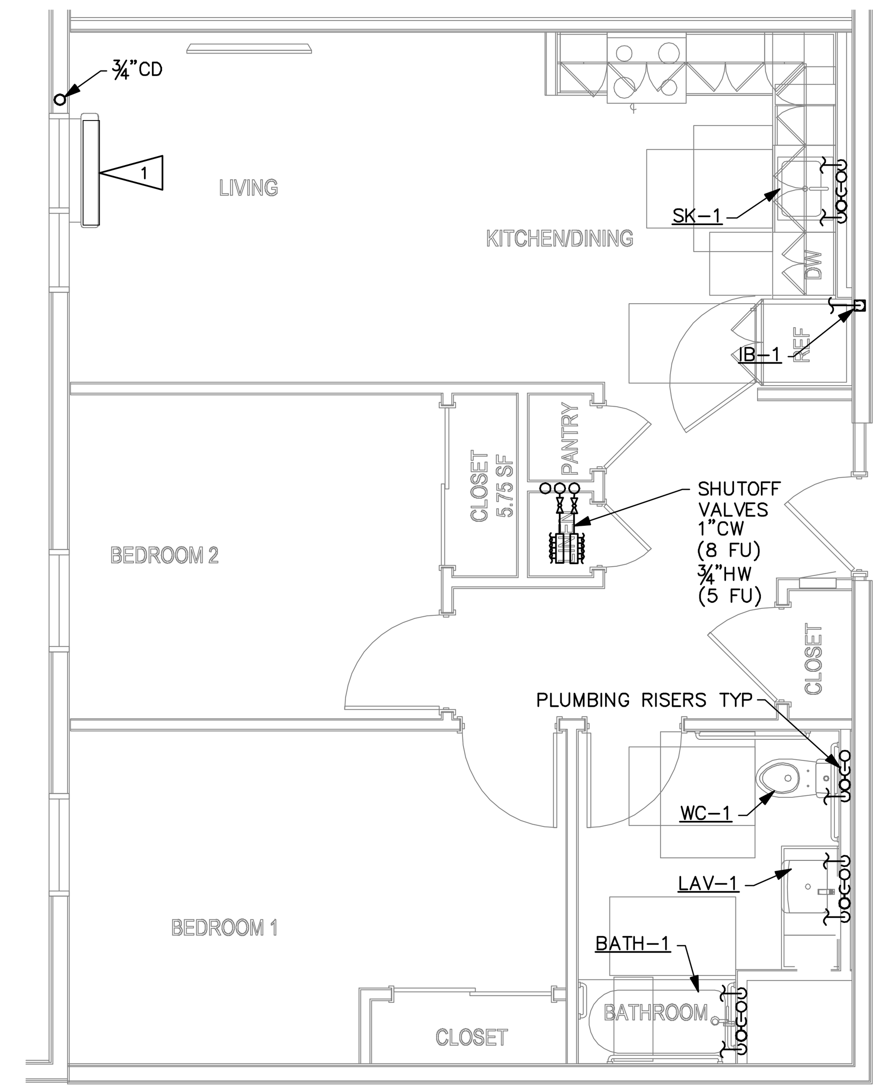

UNIT TYPE B2 – MOBILITY (2 / P3.01)
SCALE: 1/4" = 1'-0"

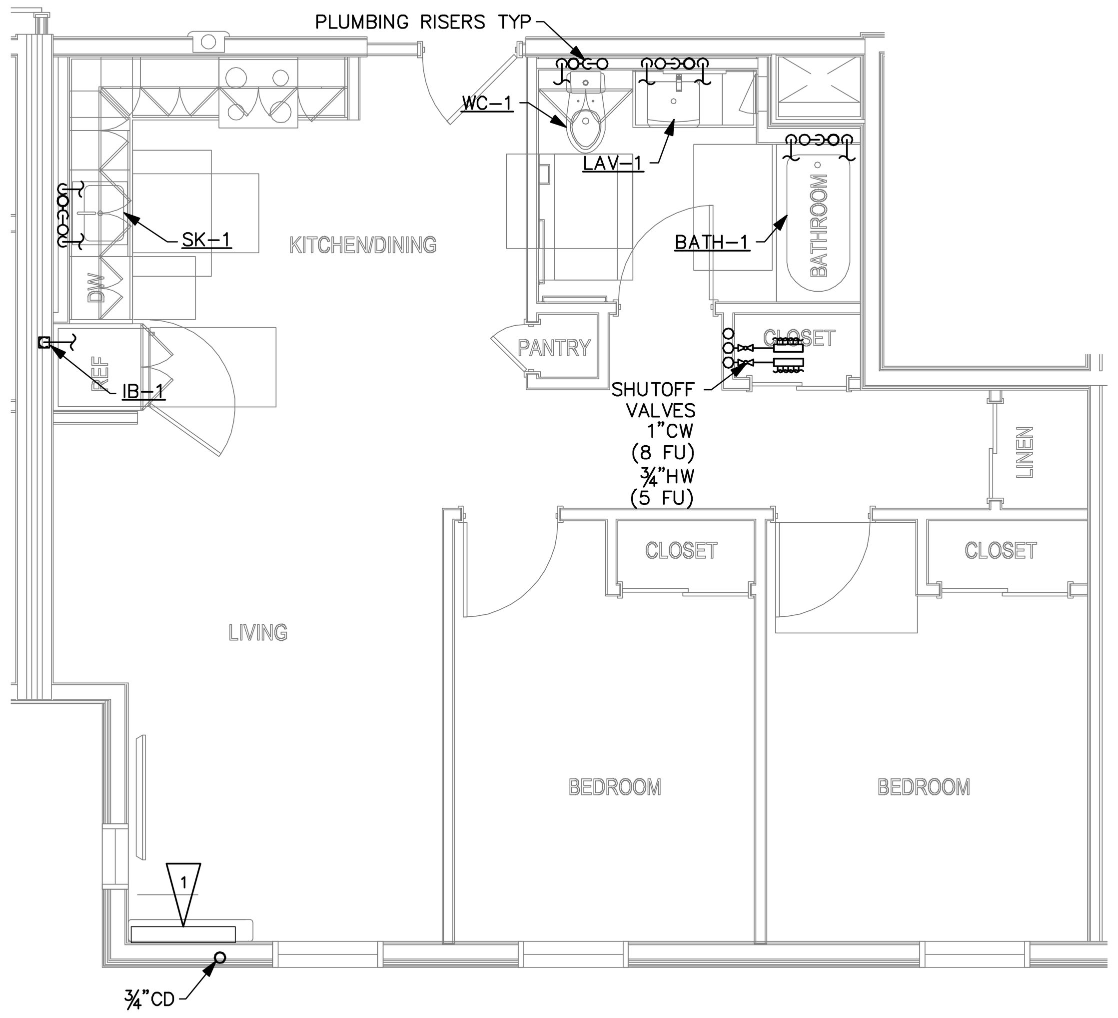

UNIT TYPE B3 (3 / P3.01)
SCALE: 1/4" = 1'-0"

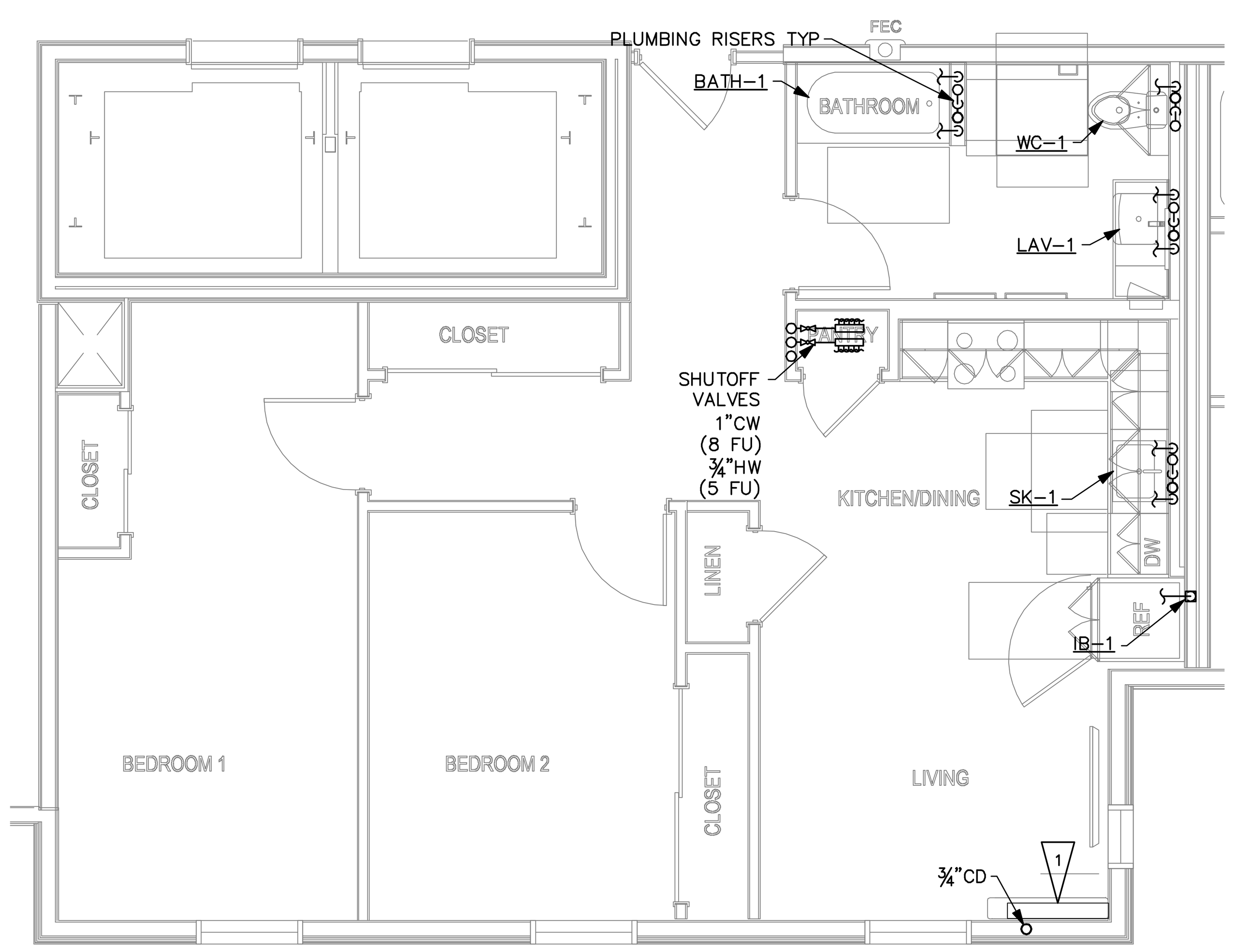

UNIT TYPE B4 (4 / P3.01)
SCALE: 1/4" = 1'-0"

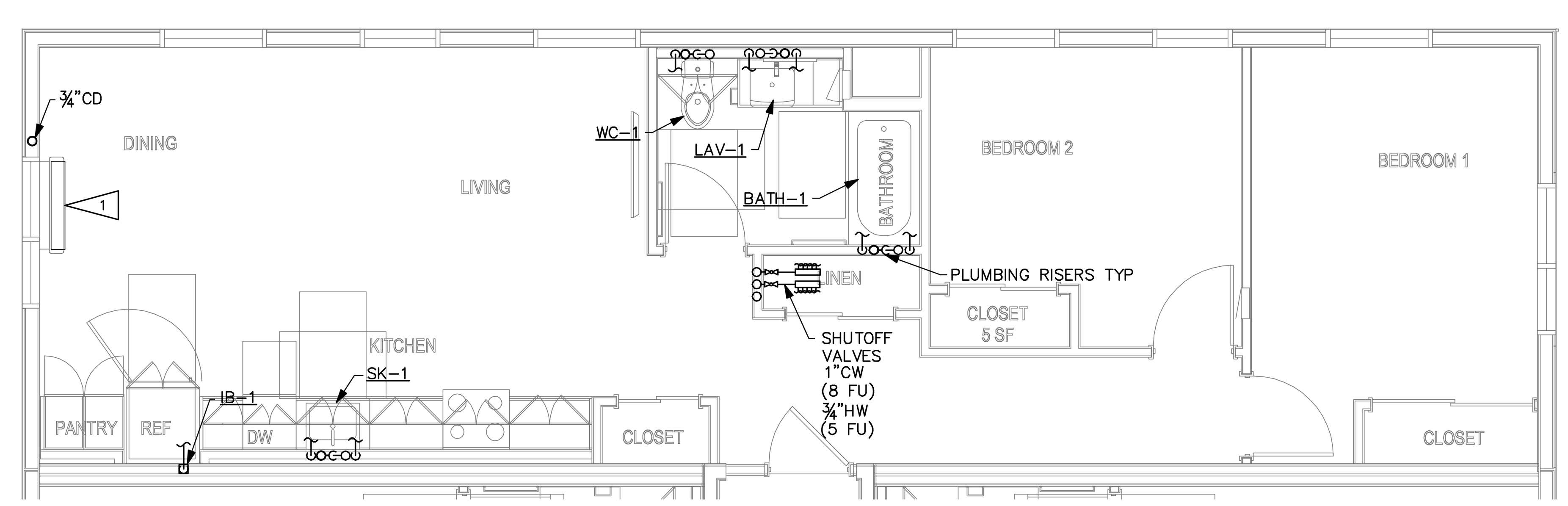

UNIT TYPE B5 (5 / P3.01)
SCALE: 1/4" = 1'-0"

FLAG NOTES:

(1) MECHANICAL EQUIPMENT. REFERENCE MECH. DWGS.

SHEET NOTES:

WATER CONNECTION TABLE		
	COLD WATER	HOT WATER
LAV	1/2" (0.75 FU)	1/2" (0.75 FU)
WC	1/2" (2.5 FU)	–
BATH	1/2" (3.0 FU)	1/2" (3.0 FU)
SK	1/2" (1.25 FU)	1/2" (1.25 FU)
WB	1/2" (3.0 FU)	1/2" (3.0 FU)
IB	1/2" (0 FU)	–

PYATOK
1611 TELEGRAPH AVE.
SUITE 200
OAKLAND, CA 94612
T. 510.465.7010 | F. 510.465.8575
www.pyatok.com

THE UNITY COUNCIL
1900 FRUITVALE AVE
#2A
OAKLAND, CA 94601

EMERALD CITY ENGINEERS, INC
21705 Highway 99 Lynnwood, WA 98036 425-741-1200 tel / 1201 fax

2700 INTERNATIONAL
OAKLAND, CA 94601

STAMP: EXP. 03-31-24 MECHANICAL STATE OF CALIFORNIA 12/09/22

ISSUE SCHEDULE

100 SD	5/11/22
50 DD	7/15/22
100 DD	9/16/22
PRICING SET	11/11/22
PERMIT SET	12/09/22

REVISION SCHEDULE

NO.	ISSUE	DATE

JOB NUMBER:	2049-008
DRAWN BY:	TJP
CHECKED BY:	MK
ISSUE DATE:	12/09/2022
SCALE:	
TITLE:	

ENLARGED UNIT PLANS

SHEET:
P3.01

PRELIMINARY - Not for Construction -

© 2019 PYATOK ARCHITECTURE & URBAN DESIGN

4/22/2022 6:28:22 PM

COPYRIGHT 2022, EMERALD CITY ENGINEERS, INC.
TPM2 J:\2049-008 2700 INTERNATIONAL, OAKLAND, CA\DWG\P301 - ENLARGED UNIT PLANS.DWG 12-01-2022 12:05

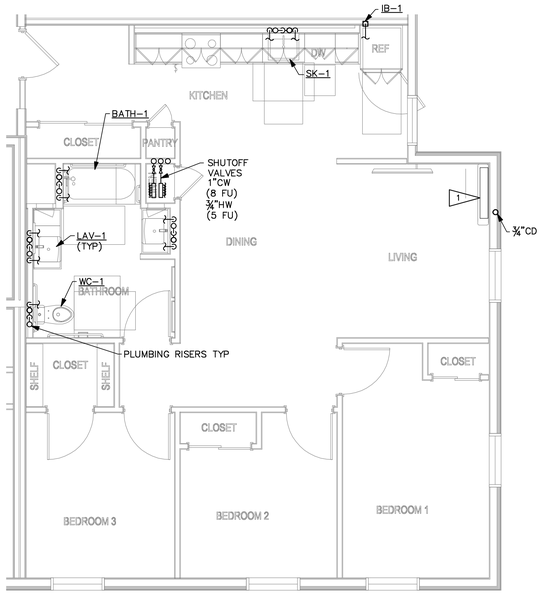

UNIT TYPE C1 – MOBILITY (1 / P3.02)
SCALE: 1/4" = 1'-0"

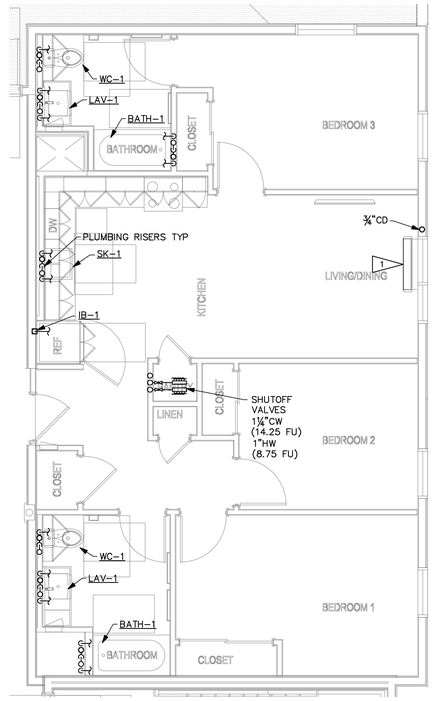

UNIT TYPE C2 (2 / P3.02)
SCALE: 1/4" = 1'-0"

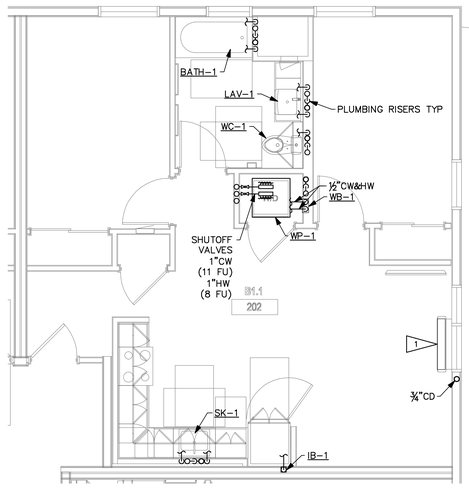

UNIT TYPE B1 – MANAGER'S (3 / P3.02)
SCALE: 1/4" = 1'-0"

FLAG NOTES:

1 MECHANICAL EQUIPMENT. REFERENCE MECH. DWGS.

SHEET NOTES:

	WATER CONNECTION TABLE	
	COLD WATER	HOT WATER
LAV	1/2" (0.75 FU)	1/2" (0.75 FU)
WC	1/2" (2.5 FU)	–
BATH	1/2" (3.0 FU)	1/2" (3.0 FU)
SK	1/2" (1.25 FU)	1/2" (1.25 FU)
WB	1/2" (3.0 FU)	1/2" (3.0 FU)
IB	1/2" (0 FU)	–
WP	1/2" (3 FU)	1/2" (3 FU)

PYATOK
1611 TELEGRAPH AVE.
SUITE 200
OAKLAND, CA 94612
T. 510.465.7010 | F. 510.465.8575
www.pyatok.com

THE UNITY COUNCIL
1900 FRUITVALE AVE
#2A
OAKLAND, CA 94601

EMERALD CITY ENGINEERS, INC
21705 Highway 99 Lynnwood, WA 98036 425-741-1200 tel / 1201 fax

2700 INTERNATIONAL
OAKLAND, CA 94601

STAMP:
REGISTERED PROFESSIONAL ENGINEER
MASSAMAGHAN KOMAR
NO. 1 ...
EXP. 03-31-24
MECHANICAL
STATE OF CALIFORNIA
12/09/22

ISSUE SCHEDULE

100 SD	5/11/22
50 DD	7/15/22
100 DD	9/16/22
PRICING SET	11/11/22
PERMIT SET	12/09/22

REVISION SCHEDULE

NO.	ISSUE	DATE

JOB NUMBER:	2049-008
DRAWN BY:	TJP
CHECKED BY:	MK
ISSUE DATE:	12/09/2022
SCALE:	
TITLE:	ENLARGED UNIT PLANS

SHEET:
P3.02

PRELIMINARY - Not for Construction -

© 2019 PYATOK ARCHITECTURE & URBAN DESIGN

4/22/2022 6:28:22 PM

COPYRIGHT 2022, EMERALD CITY ENGINEERS, INC.
TPIKE J:\2049-008 2700 INTERNATIONAL, OAKLAND, CA\DWG\P302 – ENLARGED UNIT PLANS.DWG 12-01-2022 12:05

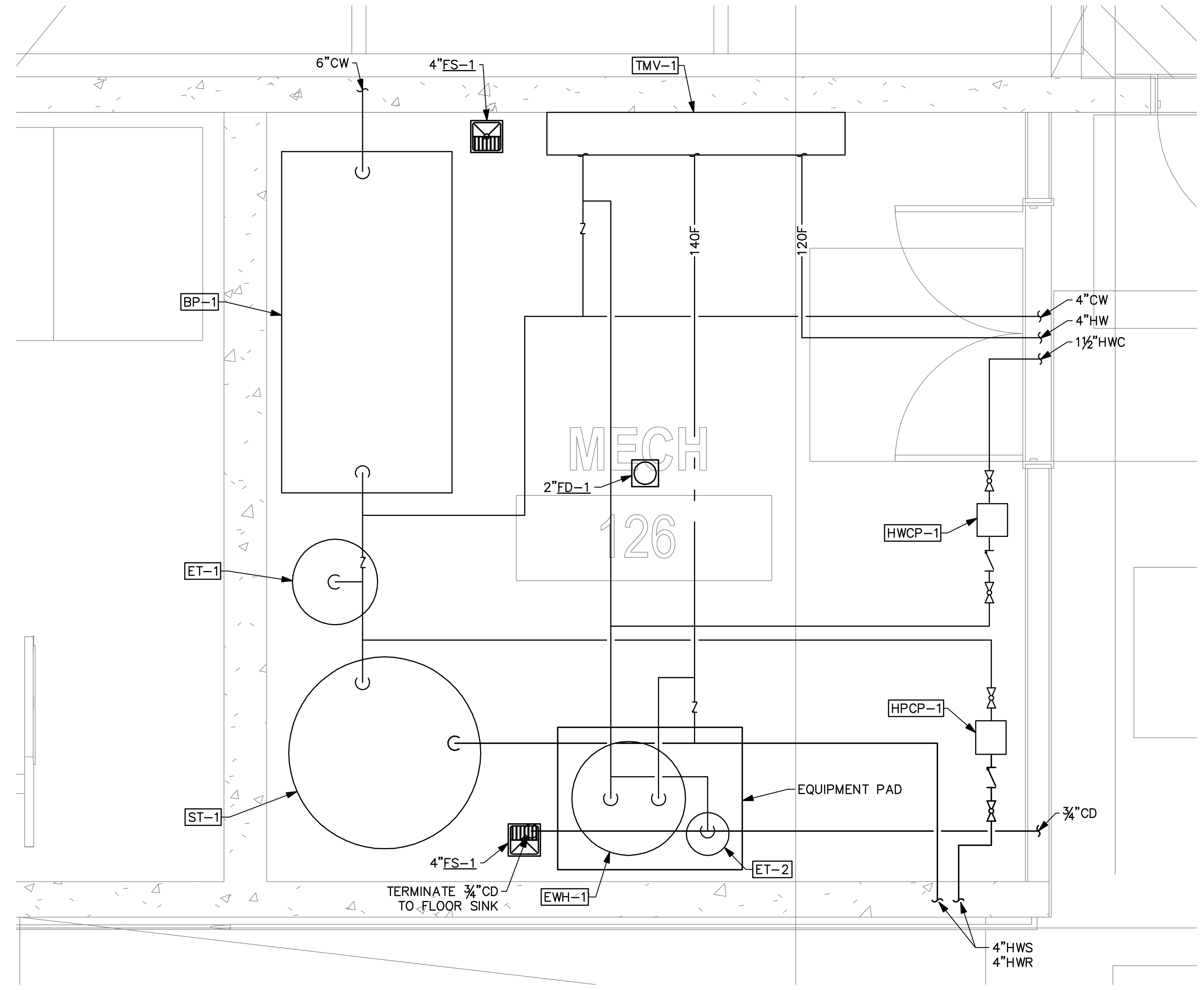

MECHANICAL ROOM

ENLARGED PLAN

SCALE: 1/2" = 1'-0"

1
P3.03

PYATOK
1611 TELEGRAPH AVE.
SUITE 200
OAKLAND, CA 94612
T. 510.465.7010 | F. 510.465.8575
www.pyatok.com

THE UNITY COUNCIL
1900 FRUITVALE
AVE
#2A
OAKLAND, CA
94601

EMERALD CITY
ENGINEERS, INC
21705 Highway 99 Lynnwood, WA
98036 425-741-1200 tel / 1201 fax

2700 INTERNATIONAL
OAKLAND, CA 94601

STAMP:
12/09/22

ISSUE SCHEDULE

100 SD	5/11/22
50 DD	7/15/22
100 DD	9/16/22
PRICING SET	11/11/22
PERMIT SET	12/09/22

REVISION SCHEDULE

NO.	ISSUE	DATE

JOB NUMBER:	2049-008
DRAWN BY:	TJP
CHECKED BY:	MK
ISSUE DATE:	12/09/2022
SCALE:	

TITLE:

ENLARGED PLANS

SHEET:

P3.03

PRELIMINARY - Not for Construction -

© 2019 PYATOK ARCHITECTURE & URBAN DESIGN

4/22/2022 6:28:22 PM

COPYRIGHT 2022, EMERALD CITY ENGINEERS, INC.
TPIKE J:\2049-008 2700 INTERNATIONAL, OAKLAND, CA\DWG\P303 - ENLARGED PLANS.DWG 12-01-2022 12:05

SHEET NOTES:

(1) = WASTE/VENT RISER IDENTIFICATION (RISER "1", FOR EXAMPLE). REFER TO DWG P4.00 DETAIL 1 FOR RISER DATAIL/PIPE SIZES.

◈ = SUPPLY RISER IDENTIFICATION (RISER "A", FOR EXAMPLE). REFER TO DWG P4.01 DETAIL 1.

(C1) = CONDENSATE RISER IDENTIFICATION (RISER "C1", FOR EXAMPLE). REFER TO DWG P4.03 DETAIL 6.

FLAG NOTES:

1 = MECHANICAL EQUIPMENT (REF).

2 = CONDENSATE PUMP.

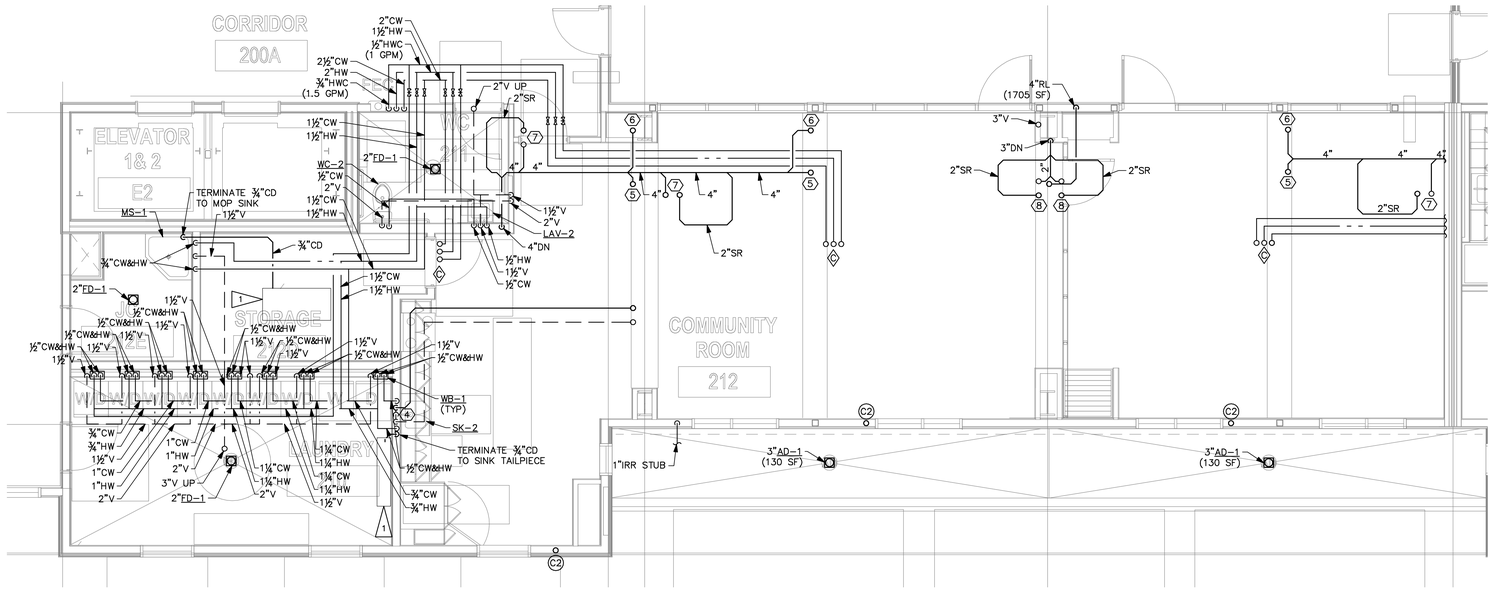

COMMUNITY ROOM

ENLARGED PLAN

SCALE: 1/4" = 1'-0"

1 / P3.04

PYATOK
1611 TELEGRAPH AVE.
SUITE 200
OAKLAND, CA 94612
T. 510.465.7010 | F. 510.465.8575
www.pyatok.com

THE UNITY COUNCIL
1900 FRUITVALE AVE
#2A
OAKLAND, CA 94601

EMERALD CITY ENGINEERS, INC
21705 Highway 99 Lynnwood, WA
98036 425-741-1200 tel / 1201 fax

2700 INTERNATIONAL

OAKLAND, CA 94601

STAMP:

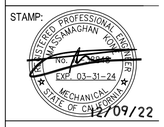

ISSUE SCHEDULE

100 SD	5/11/22
50 DD	7/15/22
100 DD	9/16/22
PRICING SET	11/11/22
PERMIT SET	12/09/22

REVISION SCHEDULE

NO.	ISSUE	DATE

JOB NUMBER:	2049-008
DRAWN BY:	TJP
CHECKED BY:	MK
ISSUE DATE:	12/09/2022
SCALE:	
TITLE:	**ENLARGED PLANS**

SHEET:

P3.04

PRELIMINARY - Not for Construction -

© 2019 PYATOK ARCHITECTURE & URBAN DESIGN

4/22/2022 6:28:22 PM

COPYRIGHT 2022, EMERALD CITY ENGINEERS, INC.

TPW: J:\2049-008 2700 INTERNATIONAL, OAKLAND, CA\DWG\P304 - ENLARGED PLANS.DWG 12-01-2022 12:04

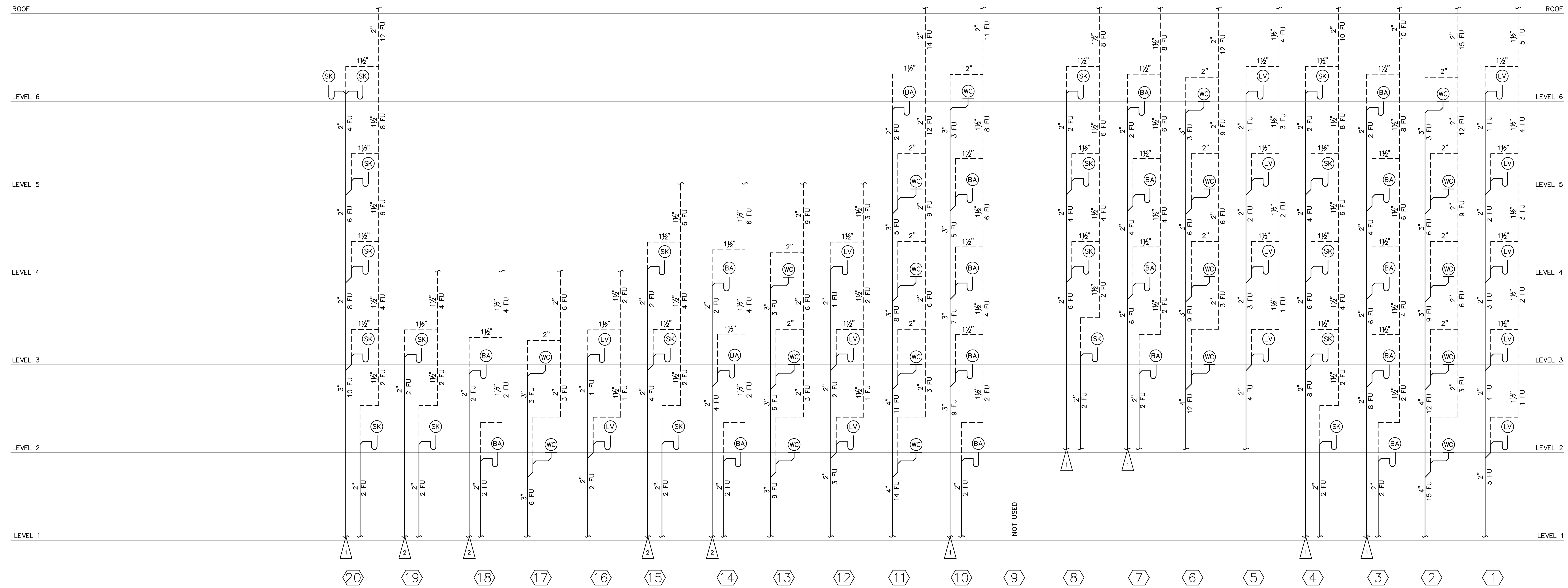

FLAG NOTES:

1 PROVIDE SUDS RELIEF PER UPC 711.0, SEE DETAIL 11 ON DWG P4.02.

2 REFER TO DETAIL 7 ON DWG P4.02 FOR RISERS RECEIVING WASTE FROM SUDS PRODUCING FIXTURES 3 STORIES OR LESS.

BA = BATHTUB (2 FU)
LV = LAVATORY (1 FU)
WC = WATER CLOSET (3 FU)
SK = KITCHEN SINK W/DISHWASHER (2 FU)
CW = CLOTHES WASHER (3 FU)
MS = MOP SINK (3 FU)

WASTE & VENT RISER DIAGRAMS

SCALE: NONE

1
P4.00

PYATOK
1611 TELEGRAPH AVE.
SUITE 200
OAKLAND, CA 94612
T. 510.465.7010 | F. 510.465.8575
www.pyatok.com

THE UNITY COUNCIL
1900 FRUITVALE AVE
#2A
OAKLAND, CA 94601

EMERALD CITY ENGINEERS, INC
21705 Highway 99 Lynnwood, WA 98036 425-741-1200 tel / 1201 fax

2700 INTERNATIONAL
OAKLAND, CA 94601

STAMP:
EXP. 03-31-24
MECHANICAL
STATE OF CALIFORNIA
12/09/22

ISSUE SCHEDULE

100 SD	5/11/22
50 DD	7/15/22
100 DD	9/16/22
PRICING SET	11/11/22
PERMIT SET	12/09/22

REVISION SCHEDULE

NO.	ISSUE	DATE

JOB NUMBER:	2049-008
DRAWN BY:	TJP
CHECKED BY:	MK
ISSUE DATE:	12/09/2022
SCALE:	
TITLE:	

WASTE & VENT RISER DIAGRAMS

SHEET:

P4.00

PRELIMINARY - Not for Construction -

© 2018 PYATOK ARCHITECTURE & URBAN DESIGN

4/22/2022 6:28:22 PM

COPYRIGHT 2022, EMERALD CITY ENGINEERS, INC.

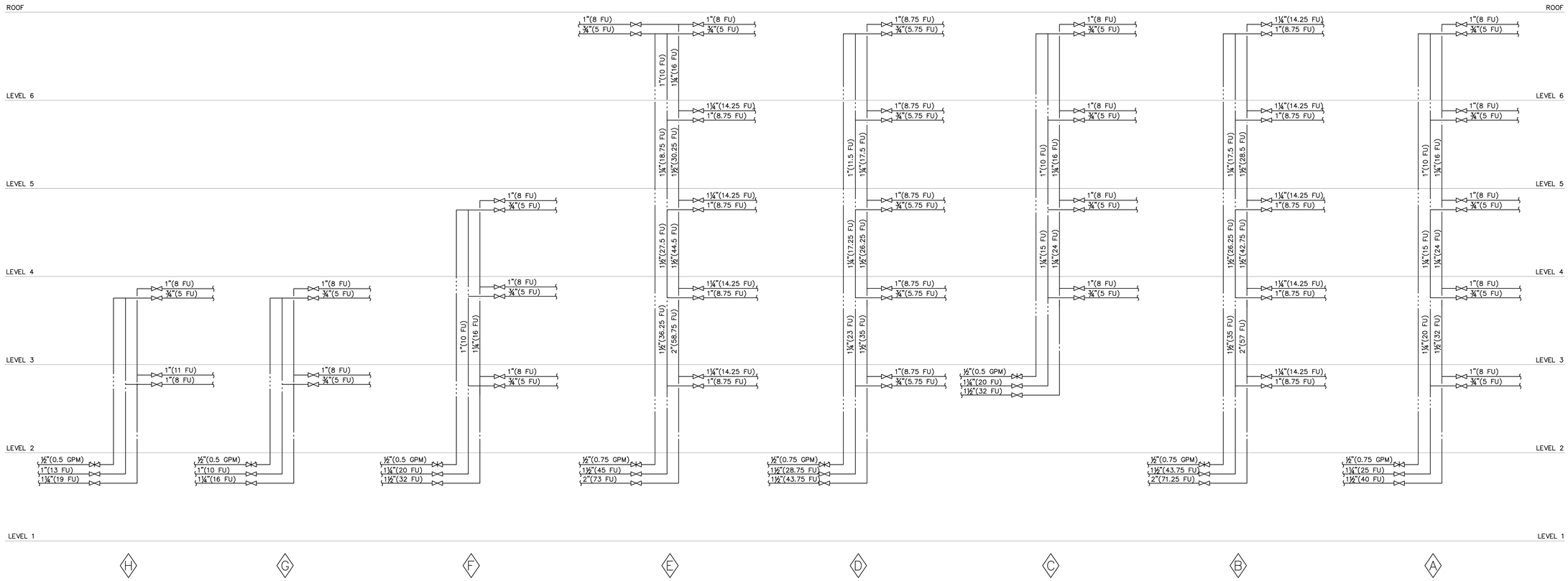

NOTE: PROVIDE SUFFICIENT CONNECTIONS (SWING JOINTS, ETC.) TO PROTECT THE PIPING FROM STRAIN AND STRESS DUE TO MULTISTORY BUILDING EXPANSION AND CONTRACTION.

WATER SUPPLY RISER DIAGRAMS

SCALE: NONE

1
P4.01

4/22/2022 6:28:22 PM

COPYRIGHT 2022, EMERALD CITY ENGINEERS, INC.

PYATOK
1611 TELEGRAPH AVE.
SUITE 200
OAKLAND, CA 94612
T. 510.465.7010 | F. 510.465.8575
www.pyatok.com

THE UNITY COUNCIL
1900 FRUITVALE
AVE
#2A
OAKLAND, CA
94601

EMERALD CITY
ENGINEERS, INC
21705 Highway 99 Lynnwood, WA
98036 425-741-1200 tel / 1201 fax

2700 INTERNATIONAL

OAKLAND, CA 94601

STAMP:

REGISTERED PROFESSIONAL ENGINEER
MASSAMAGHAN KOMAR
NO. 12948
EXP. 03-31-24
MECHANICAL
STATE OF CALIFORNIA
12/09/22

ISSUE SCHEDULE

100 SD	5/11/22
50 DD	7/15/22
100 DD	9/16/22
PRICING SET	11/11/22
PERMIT SET	12/09/22

REVISION SCHEDULE

NO.	ISSUE	DATE

JOB NUMBER:	2049-008
DRAWN BY:	TJP
CHECKED BY:	MK
ISSUE DATE:	12/09/2022
SCALE:	
TITLE:	WATER SUPPLY RISER DIAGRAMS

SHEET:

P4.01

PRELIMINARY - Not for Construction -

© 2019 PYATOK ARCHITECTURE & URBAN DESIGN

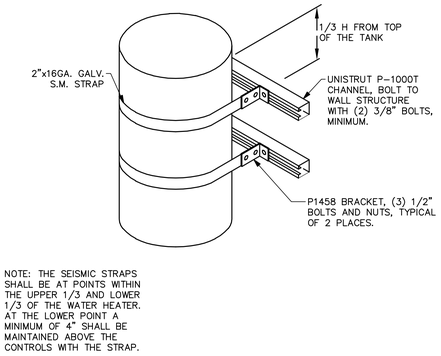

NOTE: THE SEISMIC STRAPS SHALL BE AT POINTS WITHIN THE UPPER 1/3 AND LOWER 1/3 OF THE WATER HEATER. AT THE LOWER POINT A MINIMUM OF 4" SHALL BE MAINTAINED ABOVE THE CONTROLS WITH THE STRAP.

WATER HEATER SEISMIC STRAPPING

DETAIL 9 P4.02

SCALE: NONE

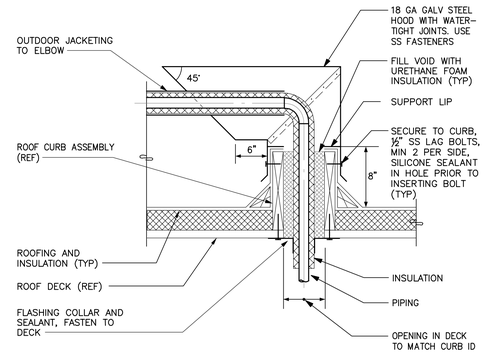

PIPE PENETRATION THROUGH ROOF

DETAIL 6 P4.02

SCALE: NONE

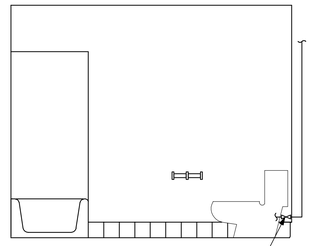

INSTALL CW ROUGH-IN APPROXIMATELY 8" AFF (CONFIRM ELEVATION WITH ARCH PLANS). VALVE & COVER PLATE SHALL NOT BE IN CONFLICT WITH TILE SURROUND (TYP).

WATER CLOSET CW SUPPLY

DETAIL 4 P4.02

SCALE: NONE

NOTE:

PROVIDE SCREEN (MIN 1/4" – MAX 1/2") INSIDE COLLECTOR FUNNEL.

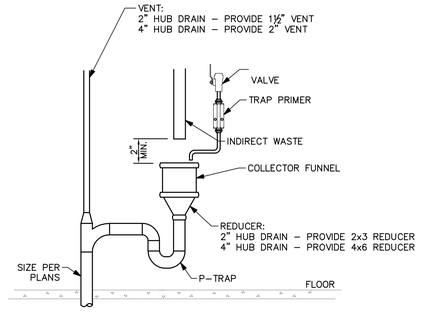

HUB DRAIN/STANDPIPE

DETAIL 1 P4.02

SCALE: NONE

PYATOK
1611 TELEGRAPH AVE.
SUITE 200
OAKLAND, CA 94612
T. 510.465.7010 | F. 510.465.8575
www.pyatok.com

THE UNITY COUNCIL
1900 FRUITVALE AVE
#2A
OAKLAND, CA 94601

EMERALD CITY ENGINEERS, INC
21705 Highway 99 Lynnwood, WA
98036 425-741-1200 tel / 1201 fax

2700 INTERNATIONAL

OAKLAND, CA 94601

PIPE SLAB PENETRATION

DETAIL 10 P4.02

SCALE: NONE

NOTES
ACW=AUTO CLOTHESWASHER

CLOTHESWASHERS ARE USED IN THESE DRAWINGS TO ILLUSTRATE AN EXAMPLE OF A SUDS PRODUCING FIXTURE. SECTION 711.0 REQUIRES THAT BATHTUBS, LAUNDRIES, WASHING MACHINE STANDPIPES, KITCHEN SINKS AND DISHWASHERS BE CONSIDERED AS SUDS-PRODUCING FIXTURES.

SECTION 711.0 STATES..."DRAINAGE CONNECTIONS SHALL NOT BE MADE INTO A DRAINAGE PIPING SYSTEM WITHIN EIGHT (8) FEET (2438 mm) OF ANY VERTICAL TO HORIZONTAL CHANGE OF DIRECTION OF A STACK CONTAINING SUDS-PRODUCING FIXTURES." PREVIOUS CODE WORDING USED THE PHRASE "FIXTURE CONNECTIONS" WHICH WAS DIFFICULT TO INTERPRET SINCE IT WAS NOT DEFINED IN CHAPTER 2. A "DRAINAGE CONNECTION" BY DICTIONARY DEFINITION IS SIMPLY ANY FITTING CONVEYING LIQUID WASTE OR SOIL INTO A DRAINAGE PIPING SYSTEM. SECTION 711 WOULD NOT PREVENT THE INSTALLATION OF A "VENTING CONNECTION" (OTHER THAN A REQUIRED PARALLEL VENT STACK) INSTALLED TO RELIEVE AIR PRESSURES IN THE SYSTEM WITHIN EIGHT FEET OF THE VERTICAL TO HORIZONTAL CHANGE IN DIRECTION.

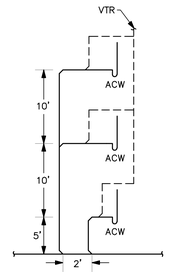

CORRECT INSTALLATION

THE INSTALLATION AT RIGHT IS A CORRECT ONE IN THAT IT MEETS THE REQUIREMENT OF THE SECOND EXCEPTION TO SECTION 711.0. THE CLOTHESWASHER ON THE FIRST FLOOR IS NOW SERVED BY A SEPARATE STACK. THE 2ND AND 3RD FLOORS ARE LIKEWISE SERVED BY A SEPARATE STACK. THE BASE OF EACH STACK RECEIVES THE DISCHARGE FROM LESS THAN 3 STORIES OF PLUMBING FIXTURES.

SUDS PRODUCING FIXTURES – 3 STORIES OR LESS

DETAIL 7 P4.02

SCALE: NONE

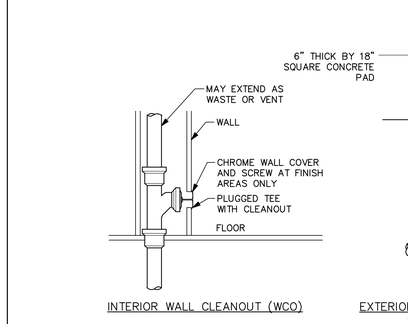

INTERIOR WALL CLEANOUT (WCO)

EXTERIOR CLEANOUT TO GRADE (COTG) (LIGHT TRAFFIC AREA)

INTERIOR FLOOR CLEANOUT (FCO)

CLEANOUTS

DETAIL 2 P4.02

SCALE: NONE

STAMP:

12/09/22

ISSUE SCHEDULE

100 SD	5/11/22
50 DD	7/15/22
100 DD	9/16/22
PRICING SET	11/11/22
PERMIT SET	12/09/22

REVISION SCHEDULE

NO.	ISSUE	DATE

JOB NUMBER:	2049-008
DRAWN BY:	TJP
CHECKED BY:	MK
ISSUE DATE:	12/09/2022
SCALE:	
TITLE:	DETAILS & DIAGRAMS

SHEET: **P4.02**

PRELIMINARY - Not for Construction -

© 2019 PYATOK ARCHITECTURE & URBAN DESIGN

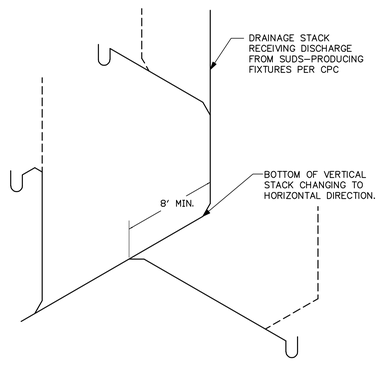

SUDS RELIEF SCHEMATIC

DIAGRAM 11 P4.02

SCALE: NONE

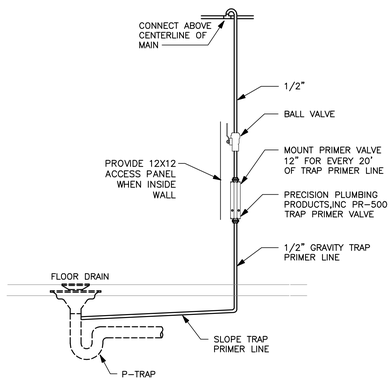

TRAP PRIMER

DETAIL 8 P4.02

SCALE: NONE

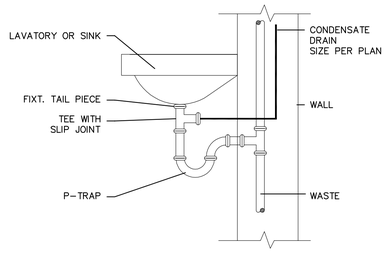

CONDENSATE TERMINATION AT SINK

DETAIL 5 P4.02

SCALE: NONE

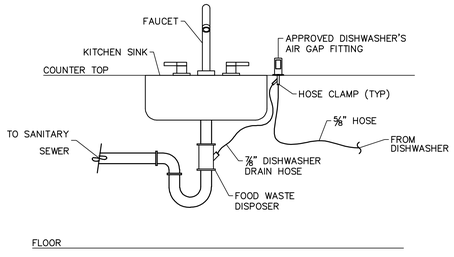

DISHWASHER DRAIN CONNECTION

DETAIL 3 P4.02

SCALE: NONE

4/22/2022 6:28:22 PM

COPYRIGHT 2022, EMERALD CITY ENGINEERS, INC.

EMERALD CITY ENGINEERS
21705 HIGHWAY 99
LYNNWOOD, WA 98036

Project Name: 2700 International
Project Number: 2049-008
Edited By: TJP
Edit Date: 9/6/2022
Template Date: 5/2/2022

EXPANSION LOOP CALCULATIONS

LOOP	PIPE TYPE	PIPE DIAMETER (IN)	PIPE RUN LENGTH (FT)	TEMP DIFF (F)	CHANGE IN LENGTH OF PIPE (IN)	EXPANSION LOOP LENGTH L (FT)	LOOP SECTION LENGTH (IN) L/5	2L/5
1	COLD WATER	3	50	40	0.99	3.43	9	18
	HOT WATER (120 F)	2 1/2	50	80	1.97	4.38	11	22
	HOT WATER CIRC (120 F)	1	50	80	1.97	2.97	8	16
2	COLD WATER	3	50	40	0.99	3.43	9	18
	HOT WATER (120 F)	2 1/2	50	80	1.97	4.38	11	22
	HOT WATER CIRC (120 F)	1	50	80	1.97	2.97	8	16
3	COLD WATER	3	50	40	0.99	3.43	9	18
	HOT WATER (120 F)	3	50	80	1.97	4.84	12	24
	HOT WATER CIRC (120 F)	1 1/4	50	80	1.97	3.33	8	16
4	COLD WATER	3	50	40	0.99	3.43	9	18
	HOT WATER (120 F)	3	50	80	1.97	4.84	12	24
	HOT WATER CIRC (120 F)	1 1/4	50	80	1.97	3.33	8	16
5	COLD WATER	2 1/2	50	40	0.99	3.11	8	16
	HOT WATER (120 F)	2 1/2	50	80	1.97	4.38	11	22
	HOT WATER CIRC (120 F)	3/4	50	80	1.97	2.65	7	14
6	COLD WATER	4	50	40	0.99	3.89	10	20
	HOT WATER (120 F)	3	50	80	1.97	4.84	12	24
	HOT WATER CIRC (120 F)	1 1/4	50	80	1.97	3.33	8	16

Example: Pipe Size – ½ inch (12.7 mm) Length of Run – 60 feet (18288 mm): (38") (965 mm) (from table).

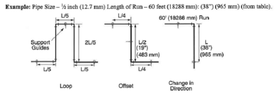

EXPANSION LOOP CALCULATIONS

DETAIL

SCALE: NONE

7
P4.03

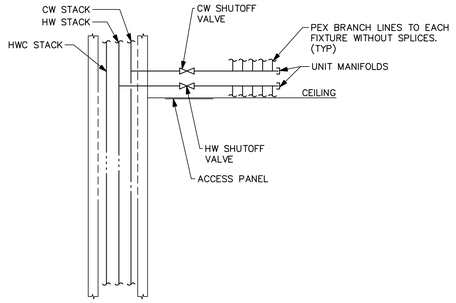

SHUTOFF VALVES

DETAIL

SCALE: NONE

4
P4.03

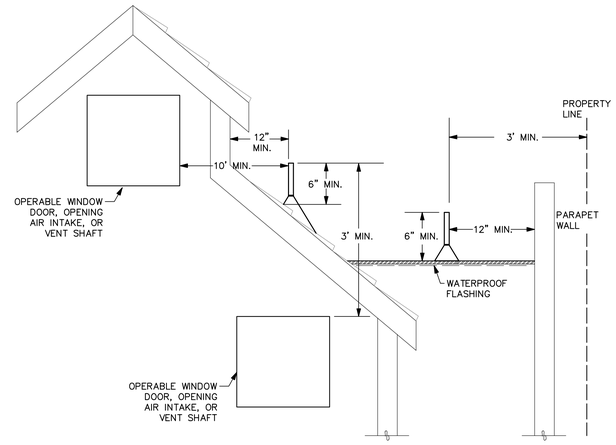

VENT TERMINATION

DETAIL

SCALE: NONE

1
P4.03

HOT WATER CIRCULATION PUMP MOUNTING

DETAIL

SCALE: NONE

5
P4.03

NOTE: PIPE SUPPORT SPACING PER CPC TABLES 313.3 AND 313.6.

PIPE SIZE	ROD SIZE
UP TO 2"	3/8" DIA.
2 1/2" THRU 3"	1/2" DIA.
4" THRU 5"	5/8" DIA.
6" THRU 7"	3/4" DIA.
8" THRU 12"	7/8" DIA.

INDIVIDUAL PIPE SUPPORTS

DETAIL

SCALE: NONE

2
P4.03

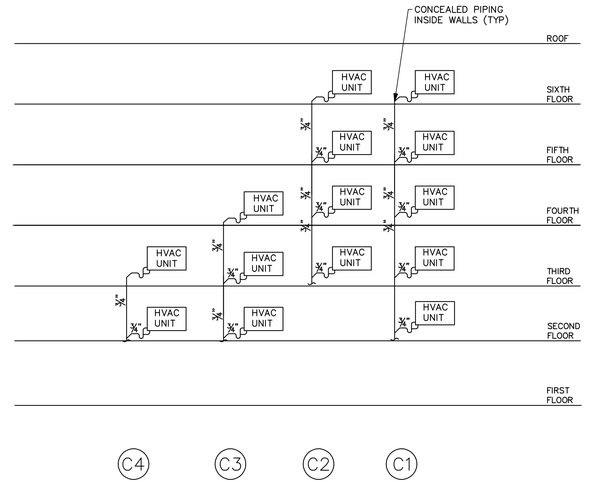

CONDENSATE DRAIN RISERS

DETAIL

SCALE: NONE

6
P4.03

NOTES:
1. PROVIDE TESTING PER 603.4.2 AND 609.9.

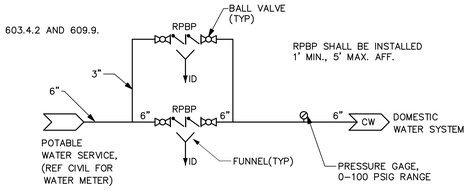

WATER SERVICE

PIPING DIAGRAM

SCALE: NONE

3
P4.03

PYATOK
1611 TELEGRAPH AVE.
SUITE 200
OAKLAND, CA 94612
T. 510.465.7010 | F. 510.465.8575
www.pyatok.com

THE UNITY COUNCIL
1900 FRUITVALE AVE
#2A
OAKLAND, CA
94601

EMERALD CITY ENGINEERS, INC
21705 Highway 99 Lynnwood, WA
98036 425-741-1200 tel / 1201 fax

2700 INTERNATIONAL

OAKLAND, CA 94601

STAMP:

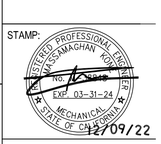

12/09/22

ISSUE SCHEDULE

100 SD	5/11/22
50 DD	7/15/22
100 DD	9/16/22
PRICING SET	11/11/22
PERMIT SET	12/09/22

REVISION SCHEDULE

NO.	ISSUE	DATE

JOB NUMBER:	2049-008
DRAWN BY:	TJP
CHECKED BY:	MK
ISSUE DATE:	12/09/2022
SCALE:	

TITLE:

DETAILS & DIAGRAMS

SHEET:

P4.03

PRELIMINARY - Not for Construction -

© 2019 PYATOK ARCHITECTURE & URBAN DESIGN

4/22/2022 6:28:22 PM

COPYRIGHT 2022, EMERALD CITY ENGINEERS, INC.

NOTES:

1. PIPE LENGTH & NUMBER OF FITTINGS TO INDIVIDUAL HEATERS SHALL BE EQUAL FOR A COMPLETE MANIFOLDED SELF-BALANCED PIPING.
2. RELIEF DRAIN PIPING SHALL BE UNDIMINISHED IN SIZE (SAME AS OUTLET) AND SHALL TERMINATE ABOVE FLOOR SINK AND SHALL BE IN COMPLIANCE WITH CPC.
3. ANCHOR AND STRAP WATER HEATERS, STORAGE TANKS, AND EXPANSION TANK TO RESIST HORIZONTAL DISPLACEMENT OF EARTHQUAKE PER CODE (COORD WITH STRUCTURAL).
4. CONTRACTOR SHALL PROVIDE PRESSURE AND TEMPERATURE TAPS (E.G. PETES PLUGS) AT THE INLET AND OUTLET OF HEAT PUMP WATER HEATERS, STORAGE TANK, MIXING VALVE STATION, AND CIRCULATION PUMPS FOR FUTURE TESTING AND TROUBLESHOOTING OF THE SYSTEM.

PLUMBING SUBCONTRACTOR SHALL INCLUDE THE FOLLOWING SERVICES FROM THE WATER HEATER MANUFACTURER:

1. PRIOR TO THE INSTALLATION OF THE WATER HEATERS, AN AUTHORIZED TECHNICIAN FAMILIAR WITH ALL REQUIREMENTS FOR THE WATER HEATER INSTALLATION SHALL MEET ON SITE TO REVIEW THE PLUMBING, PIPING, VENTING, ELECTRICAL, AND CONTROLS FOR THE WATER HEATERS.
2. THE TECHNICIAN SHALL CONFIRM THAT ALL WORK BY THE ASSOCIATED TRADES HAS BEEN COORDINATED AND MEETS THE FACTORY RECOMMENDED INSTALLATION REQUIREMENTS.
3. ANY WORK THAT ANY SUBCONTRACTOR IS REQUIRED TO PERFORM TO MAKE THE WATER HEATERS OPERATIONAL, AND WHICH IS NOT DEEMED TO BE INCLUDED IN THEIR SCOPE OF WORK, SHALL BE REPORTED TO THE ENGINEER IMMEDIATELY.
4. THE WATER HEATER TECHNICIAN SHALL COORDINATE THE FINAL STARTUP OF THE WATER HEATERS. THE WATER HEATER TECHNICIAN SHALL BE THE SINGLE POINT OF CONTACT FOR ANY TROUBLE CALLS AND SHALL BE RESPONSIBLE FOR COORDINATING ANY AND ALL TRADES NECESSARY TO RESOLVE ANY WATER HEATER PROBLEMS.

MIXING VALVE NOTE:

PER CPC 413.1 AND 414.5, THE HOT WATER TO PUBLIC LAVATORIES AND BATHTUBS SHALL BE LIMITED TO 120F. THE WATER HEATER THERMOSTAT SHALL NOT BE CONSIDERED A CONTROL FOR MEETING THIS PROVISION.

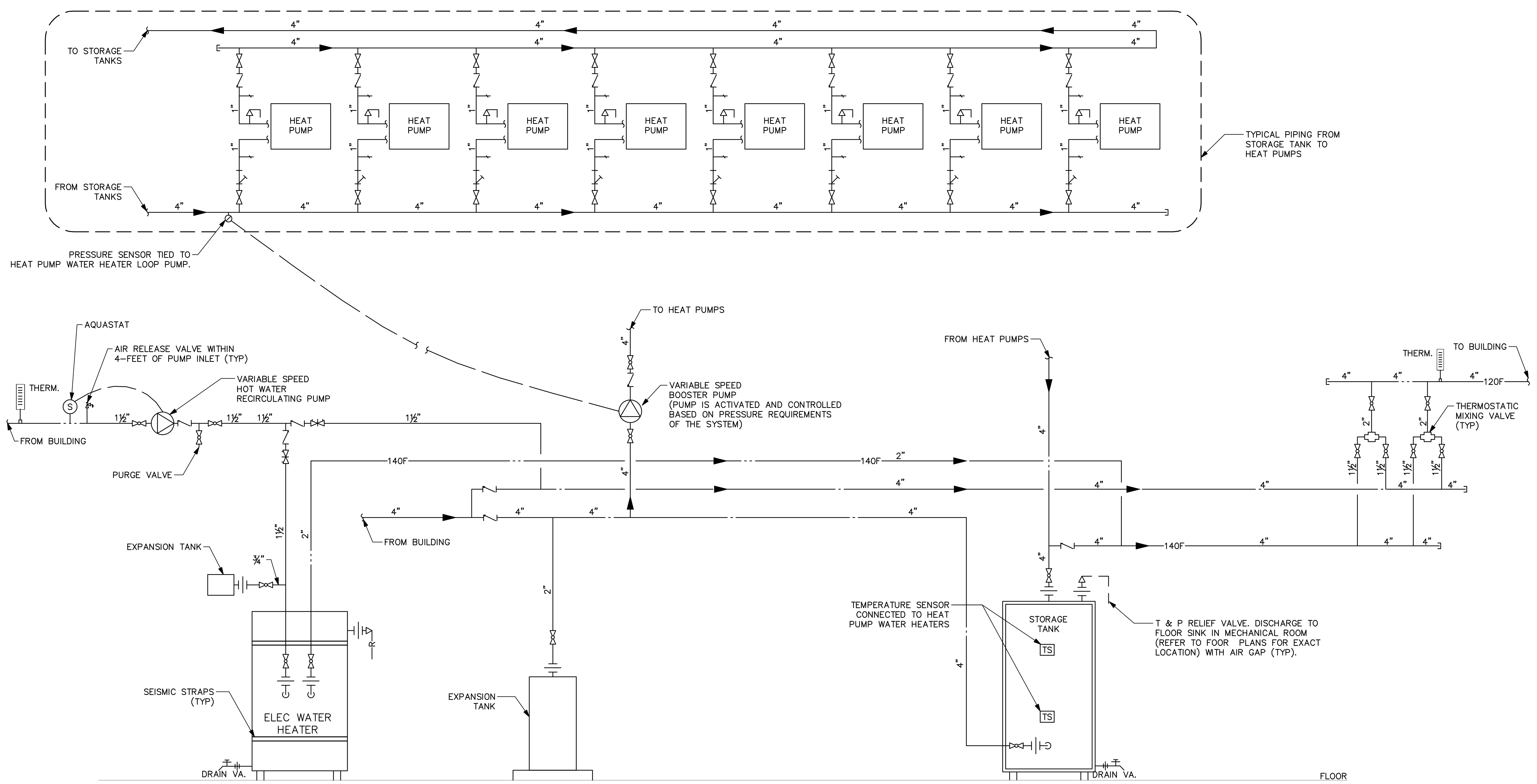

WATER HEATER PIPING DIAGRAM

SCALE: NONE

1
P4.04

4/22/2022 6:28:22 PM

COPYRIGHT 2022, EMERALD CITY ENGINEERS, INC.

PYATOK
1611 TELEGRAPH AVE.
SUITE 200
OAKLAND, CA 94612
T. 510.465.7010 | F. 510.465.8575
www.pyatok.com

THE UNITY COUNCIL
1900 FRUITVALE AVE
#2A
OAKLAND, CA 94601

EMERALD CITY ENGINEERS, INC
21705 Highway 99 Lynnwood, WA 98036 425-741-1200 tel / 1201 fax

2700 INTERNATIONAL
OAKLAND, CA 94601

STAMP:
REGISTERED PROFESSIONAL ENGINEER
MASSAMAGHAN KONE
EXP. 03-31-24
MECHANICAL
STATE OF CALIFORNIA
12/09/22

ISSUE SCHEDULE

100 SD	5/11/22
50 DD	7/15/22
100 DD	9/16/22
PRICING SET	11/11/22
PERMIT SET	12/09/22

REVISION SCHEDULE

NO.	ISSUE	DATE

JOB NUMBER:	2049-008
DRAWN BY:	TJP
CHECKED BY:	MK
ISSUE DATE:	12/09/2022
SCALE:	
TITLE:	

DETAILS & DIAGRAMS

SHEET:

P4.04

PRELIMINARY - Not for Construction -

© 2019 PYATOK ARCHITECTURE & URBAN DESIGN

FIGURE 5: PIPE AND CONDUIT PENETRATION AT SOUND-RATED WALLS

Pipes 4-inch Diameter and Greater

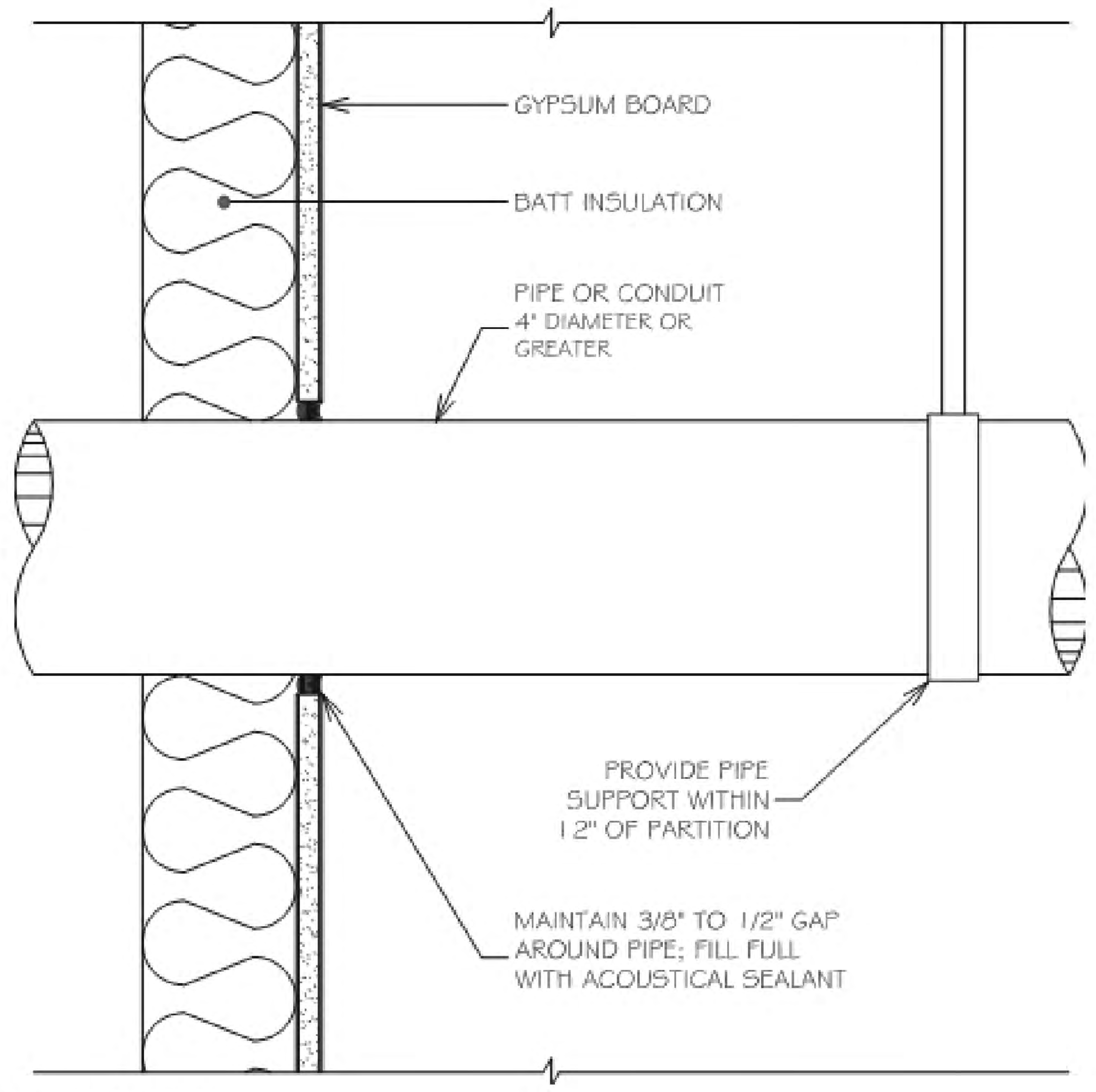

RGD Acoustics, Inc. © 2019

RGD#: 22-012 20 June 2022

ACOUSTICAL DETAIL 5 P4.05

SCALE: NONE

FIGURE 3: VIBRATION ISOLATION AT RISER CLAMP

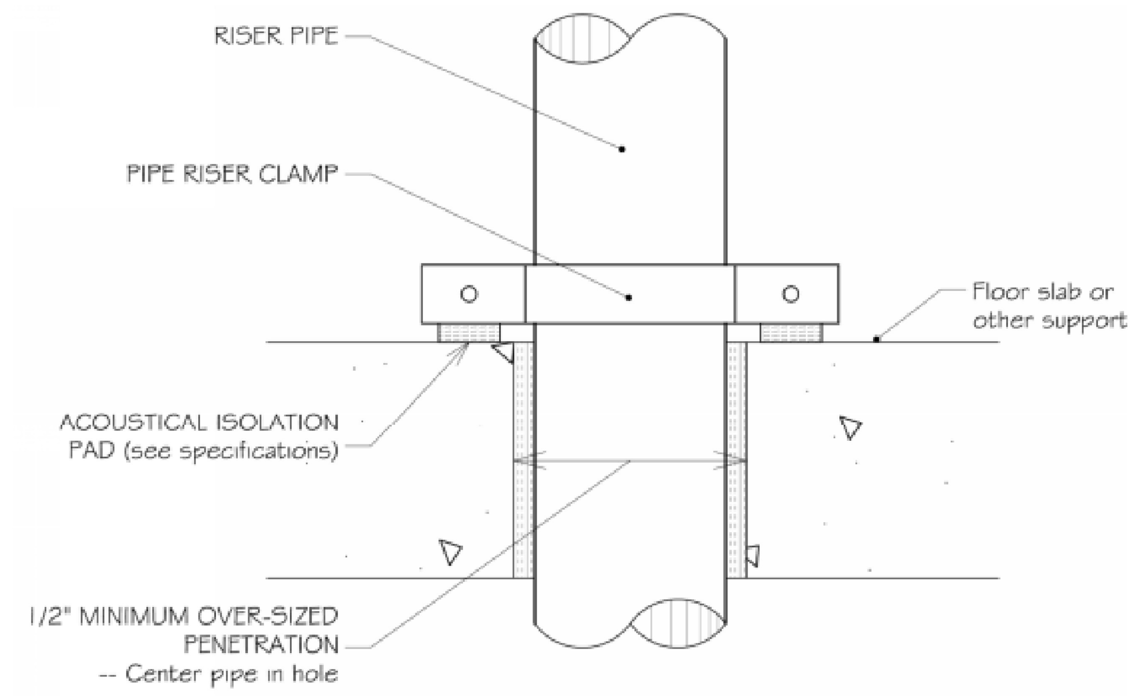

Notes: 1) At pipe penetrations through structure, install Acoustical Isolator or isolation product as required to maintain pipe clearances UON. See specifications for approved products.
2) Where fire-rating is required at pipe penetration, the fire-rated product must be resilient and remain non-hardening when cured; to be specified by others.

RGD Acoustics, Inc. © 2019

ACOUSTICAL DETAIL 3 P4.05

SCALE: NONE

FIGURE 1: PIPE CLEARANCE REQUIREMENTS

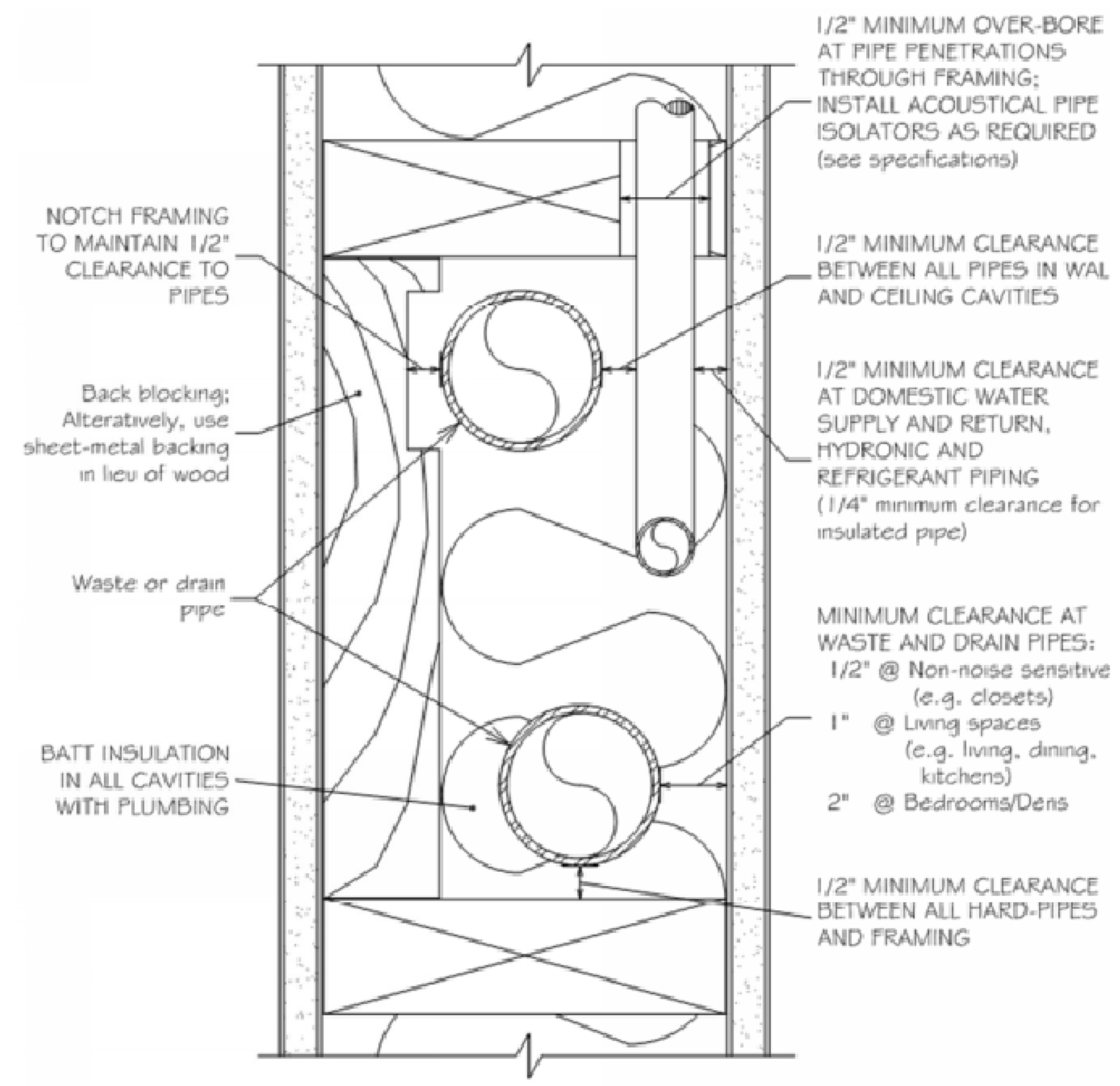

Note: Boring, notching and repair of structural framing must be performed per Structrual specifications.

ACOUSTICAL DETAIL 1 P4.05

SCALE: NONE

FIGURE 4: PIPE AND CONDUIT PENETRATION AT SOUND-RATED WALLS

Pipes Less than 4-inch Diameter

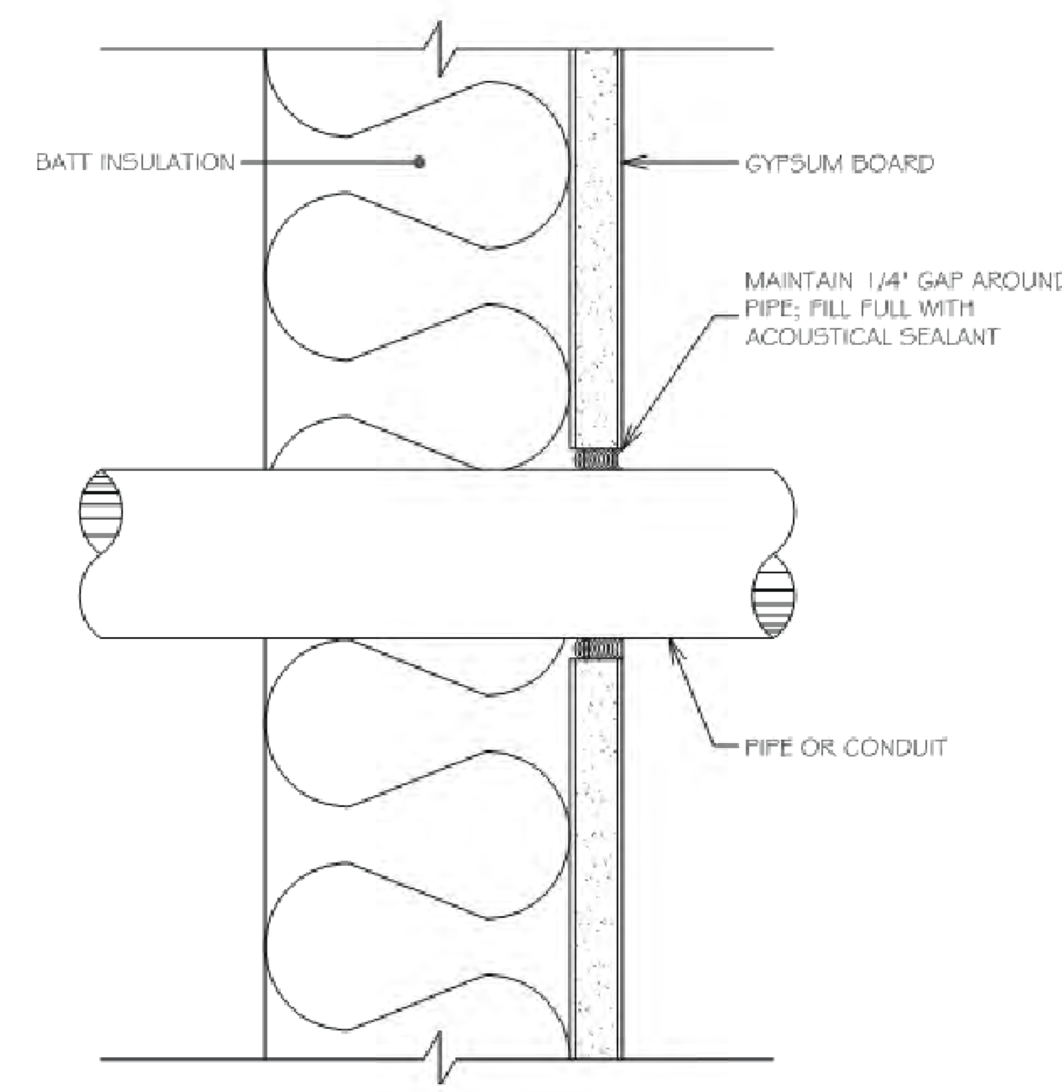

RGD Acoustics, Inc. © 2019

RGD#: 22-012 20 June 2022

ACOUSTICAL DETAIL 4 P4.05

SCALE: NONE

FIGURE 2: PIPE ATTACHMENT AND TREATMENT REQUIREMENTS

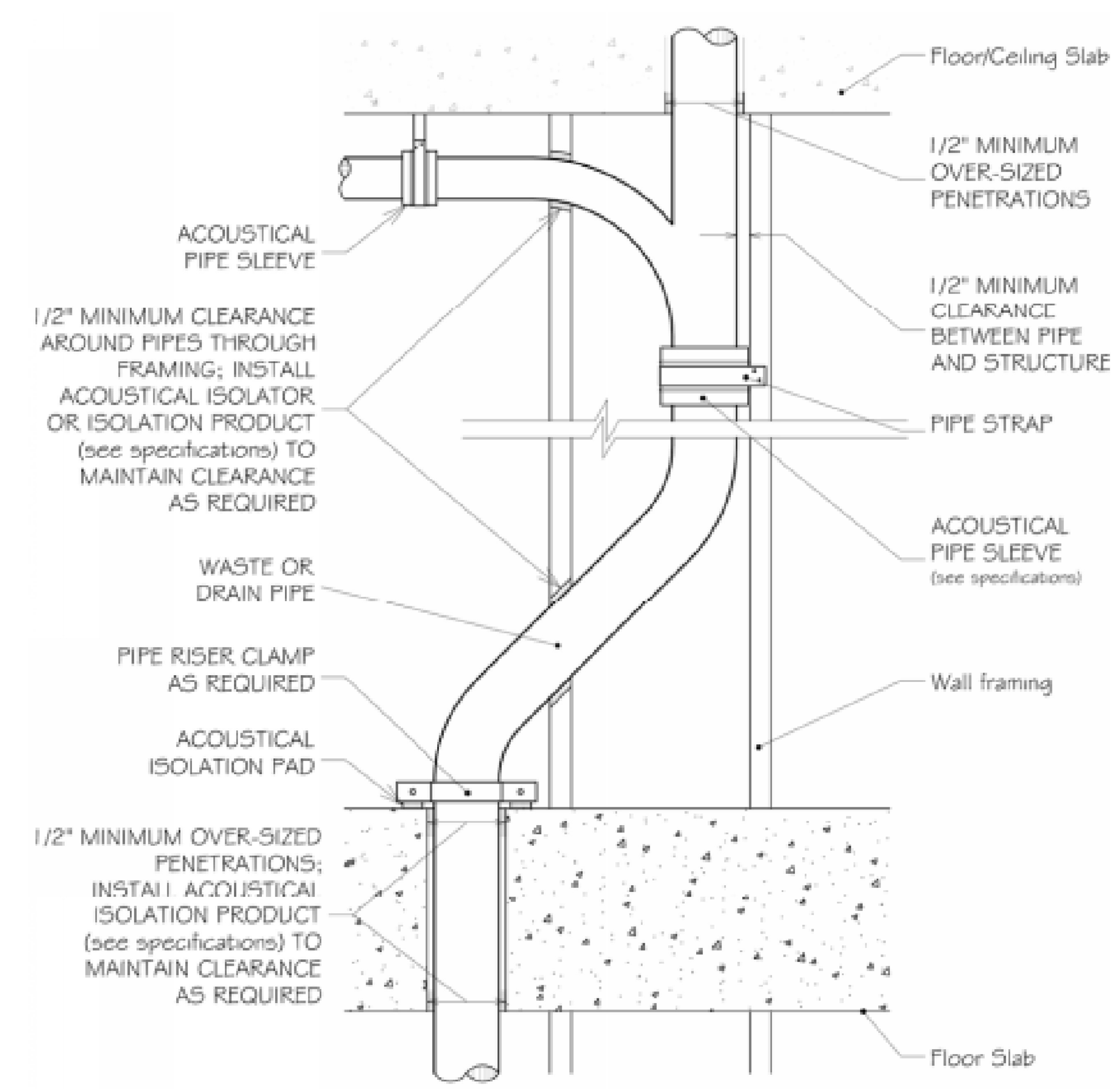

Notes: 1) Where fire-rating is required at pipe penetrations, the fire-rated product must be resilient and remain non-hardening when cured; to be specified by others.
2) Batt insulation required in all wall and ceiling cavities with plumbing pipes.

RGD Acoustics, Inc. © 2019

ACOUSTICAL DETAIL 2 P4.05

SCALE: NONE

PYATOK
1611 TELEGRAPH AVE.
SUITE 200
OAKLAND, CA 94612
T. 510.465.7010 | F. 510.465.8575
www.pyatok.com

THE UNITY COUNCIL
1900 FRUITVALE AVE
#2A
OAKLAND, CA 94601

EMERALD CITY ENGINEERS, INC
21705 Highway 99 Lynnwood, WA 98036 425-741-1200 tel / 1201 fax

2700 INTERNATIONAL
OAKLAND, CA 94601

STAMP:

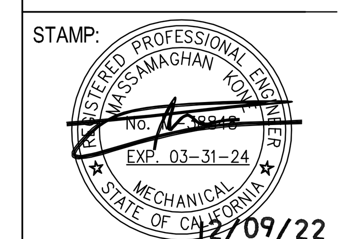

ISSUE SCHEDULE

100 SD	5/11/22
50 DD	7/15/22
100 DD	9/16/22
PRICING SET	11/11/22
PERMIT SET	12/09/22

REVISION SCHEDULE

NO.	ISSUE	DATE

JOB NUMBER:	2049-008
DRAWN BY:	TJP
CHECKED BY:	MK
ISSUE DATE:	12/09/2022
SCALE:	
TITLE:	

DETAILS & DIAGRAMS

SHEET:

P4.05

PRELIMINARY - Not for Construction -

© 2019 PYATOK ARCHITECTURE & URBAN DESIGN
COPYRIGHT 2022, EMERALD CITY ENGINEERS, INC.

4/22/2022 6:28:22 PM

GENERAL NOTES

GENERAL

1. PROVIDE ELECTRICAL INSTALLATION IN ACCORDANCE W/ NATIONAL ELECTRICAL CODE, NATIONAL ELECTRICAL SAFETY CODE, LOCAL CODES, ORDINANCES, AND REQUIREMENTS OF UTILITY COMPANIES FURNISHING SERVICES TO INSTALLATION.
2. PROVIDE ITEMS NECESSARY TO COMPLETE ELECTRICAL SYSTEMS. THE ELECTRICAL DRAWINGS ARE DIAGRAMMATIC AND DO NOT NECESSARILY SHOW EVERY CONDUIT, BOX, CONDUCTOR, OR SIMILAR ITEMS FOR A COMPLETE INSTALLATION.
3. THE CONTRACTOR SHALL VISIT THE SITE PRIOR TO BID AND DETERMINE CONDITIONS WHICH MAY AFFECT BID. ANY ITEMS NOT FULLY UNDERSTOOD SHALL BE BROUGHT TO THE ATTENTION OF THE ARCHITECT PRIOR TO BIDDING.
4. "REF" INDICATIONS DENOTE WORK COVERED ELSEWHERE (ARCHITECTURAL, STRUCTURAL, OR MECHANICAL).
5. WHEREVER THE WORD "PROVIDE" IS USED, IT MEANS FURNISH AND INSTALL COMPLETE AND READY FOR USE.
6. COORDINATE LOCATION OF ELECTRICAL FIXTURES WITH OTHER TRADES.
7. REFER TO EQUIPMENT DRAWINGS FOR MECHANICAL CHARACTERISTICS (SIZE, LOCATION, ETC.) OF MECHANICAL EQUIPMENT UNLESS OTHERWISE INDICATED.
8. PROVIDE CONDUCTORS AND RACEWAYS PER NATIONAL ELECTRICAL CODE.

MATERIALS AND METHODS

9. PROVIDE RACEWAY AND WIRING AS NOTED, ROUTED CONCEALED WITHIN BUILDING STRUCTURE WHEREVER POSSIBLE (EXCEPTIONS INCLUDE GARAGE & BOH/UTILITY ROOMS). ANY EXPOSED WIRING IS TO BE SENT AS AN RFI FOR OWNER, ARCHITECT, & ENGINEER REVIEW.
10. OUTDOOR EXPOSED CONDUIT ROUTING: CONDUITS ROUTED ON ROOF OR EXPOSED TO WEATHER SHALL BE EMT OR LIQUID-TIGHT FLEX. PROVIDE WATER-TIGHT CONNECTIONS AND FITTINGS. CONDUITS ON THE ROOF TO BE A MINIMUM 1" ABOVE THE ROOF SURFACE.
11. CLEARANCES: VERIFY PHYSICAL DIMENSIONS OF EQUIPMENT TO ENSURE THAT ACCESS CLEARANCES CAN BE MET.
12. CONNECTIONS: PROVIDE GRS, METALLIC FLEX, OR LIQUIDTITE FLEX CONDUITS FOR CONNECTIONS TO MOTORS OR MOTORIZED EQUIPMENT.
13. WIRING: MINIMUM TO BE #12 AWG WIRE IN COMMON AREAS; #14 ALLOWED WITHIN DWELLING UNITS ONLY. NON-METALLIC CABLE (ROMEX) IS ALLOWED IN TYPE III OR V CONSTRUCTION ONLY, INSTALLED PER NEC.
14. APARTMENT FEEDERS ARE TO MAINTAIN SUFFICIENT SPACING FOR TEMPERATURE REGULATION. AT NO POINT SHALL FEEDERS BE ROUTED SUCH THAT THEY ARE BUNDLED TIGHTLY (WITHOUT SUFFICIENT SPACING) FOR MORE THAN 24-INCHES CONTINUOUS.
15. FEEDERS PASSING THROUGH TYPE I CONSTRUCTION ARE TO BE MC CABLE.
16. WIRING: UNLESS OTHERWISE NOTED, UPSIZE BRANCH CIRCUITS AS NECESSARY TO LIMIT VOLTAGE DROP TO 2% MAXIMUM.
17. WIRING: POWER WIRING SHALL BE COPPER, THWN/THHN, INSULATED FOR 600V. ALUMINUM CONDUCTORS ARE PERMITTED FOR FEEDERS 100 AMPS OR LARGER. IF CHANGING TO ALUMINUM, INCREASE WIRE AND CONDUIT SIZE TO EQUAL OR EXCEED DESIGNED COPPER RATING (INCLUDING GROUND).
18. DISCONNECTS:
    - 18.1. PROVIDE DISCONNECTS (FUSED AND UNFUSED) AS SHOWN AND REQUIRED BY CODE FOR EQUIPMENT FURNISHED UNDER ELECTRICAL AND MECHANICAL SCOPES OF WORK. REFER TO COORDINATION MATRIX.
    - 18.2. OUTDOOR DISCONNECTS: PROVIDE ALL NECESSARY MEMBRANE PENETRATIONS WITH WATERPROOFING PER ARCHITECTURAL SPECIFICATIONS.
    - 18.3. ALL DISCONNECTS ARE TO MAINTAIN CODE MINIMUM WORKING CLEARANCE (30" WIDTH, 36" DEPTH) AND ACCESS.
    - 18.4. INDOOR DISCONNECTS: ALLOWED TO BE INSTALLED ABOVE A CEILING PER 404.8 EX:2. PROVIDE ACCESS PANEL MINIMUM 22" X 22" PER 110.26(A)(4).
19. FUSES: PROVIDE FUSES PER EQUIPMENT NAMEPLATE UNLESS OTHERWISE INDICATED. FUSES SHALL BE PROVIDED WITH REJECTION TYPE FUSE HOLDERS.
20. SUPPORT: SUPPORT LIGHT FIXTURES FROM BUILDING STRUCTURE. DO NOT SUPPORT FIXTURES FROM SUSPENDED CEILING.
21. LABELS: ENCLOSURES FOR ELECTRICAL PANELS, TIME SWITCHES, DISCONNECTS, STARTERS, CONTACTORS, PULL BOXES, ETC. SHALL BE PERMANENTLY LABELED TO IDENTIFY THEIR DESIGNATION OR UNIT SERVED. PANEL SCHEDULES MUST BE TYPED.
22. PAINTING: ELECTRICAL ENCLOSURES SHALL BE PAINTED TO MATCH ADJACENT WALL.
23. COVERPLATES: PROVIDE AS FOLLOWS, SUBMIT SAMPLE OF EACH FOR APPROVAL:
    - 23.1. COMMERCIAL KITCHENS: STAINLESS STEEL SWITCH PLATES, WITH BLACK DEVICES.
    - 23.2. ALL OTHER AREAS: WHITE COLOR PLASTIC.
24. ELECTRICAL CONTRACTOR SHALL REVIEW THE LANDSCAPE PLANS FOR ALL IRRIGATION CONTROL WIRING RACEWAY REQUIREMENTS.
25. OUTLET BOXES SHALL NOT BE INSTALLED BACK TO BACK.

SITE ELECTRICAL

26. TRENCHING: COORDINATE ALL TRENCHING WORK WITH OTHER UTILITY LOCATIONS AND DRAINAGE TRENCHES.
27. UNDERGROUND CONDUITS: PROVIDE PVC, SCHEDULE 40, 3/4" MINIMUM. PROVIDE PVC CONDUIT TRANSITION ELBOW WHEN TURNING UP TO ABOVE-GRADE.
28. BELOW SLAB: CONDUIT ROUTED BELOW ON-GRADE FLOOR SLABS SHALL BE INSTALLED PRIOR TO FLOOR SLAB POUR. ROUTE CONDUITS BELOW SLAB AS STRAIGHT AS POSSIBLE TO MINIMIZE BENDS.
29. ALL CONDUITS PENETRATING THE BUILDING ENVELOPE BELOW GRADE SHALL FOLLOW WATERPROOFING REQUIREMENTS IN THE ARCHITECTURAL DRAWINGS.

NEUTRALS

30. AT CONTRACTORS DISCRETION, NEUTRALS MAY BE SHARED ON COMBINED HOMERUNS UNLESS THE CIRCUIT HAS A GFCI OR AFCI BREAKER, AN ISOLATED GROUND, OR IS FROM A PANEL WITH SPD (TVSS) PROTECTION. ANY NEUTRAL DOWNSTREAM FROM A DIMMER SHALL BE DEDICATED TO THE DIMMED LOAD.
31. NEUTRAL WIRES SHOWN FOR TWO- AND THREE-POLE MECHANICAL/KITCHEN EQUIPMENT MAY BE OMITTED UPON VERIFICATION THAT THEY ARE NOT REQUIRED FOR EITHER OPERATION OR CONTROL CIRCUITS PER MANUFACTURER'S SPECIFICATIONS.

LIGHTING

32. PROVIDE LIGHT FIXTURES W/ PROPER FITTING FLANGES, MOUNTING SUPPORTS, AND ACCESSORY ITEMS UL LISTED FOR CONDITIONS OF USE.
33. LOW VOLTAGE LIGHTING
    - 33.1. PROVIDE LOW VOLTAGE TRANSFORMERS IN NEARBY ACCESSIBLE CEILING SPACE.
    - 33.2. PROVIDE LOW VOLTAGE CONDUCTORS SIZED PER MANUFACTURER'S GUIDELINES TO MINIMIZE VOLTAGE DROP.

LIGHTING CONTROL

34. THE MAXIMUM LIGHTING POWER THAT MAY BE CONTROLLED FROM A SINGLE SWITCH OR AUTOMATIC CONTROL SHALL NOT EXCEED THAT WHICH IS PROVIDED BY A TWENTY AMPERE CIRCUIT LOADED TO EIGHTY PERCENT. A MASTER CONTROL MAY BE INSTALLED, PROVIDED THE INDIVIDUAL SWITCHES RETAIN THEIR CAPABILITY TO FUNCTION INDEPENDENTLY.
35. EXIT SIGNS, BATTERY BALLASTS, & EMERGENCY FIXTURES SHALL BE CONNECTED TO AN UNSWITCHED LEG OF THE DESIGNATED CIRCUIT.
36. NO LIGHTING SHALL BE ON THE SAME CIRCUIT BREAKER AS EQUIPMENT LOADS.
37. ALL LIGHTING SWITCHES SHALL BE MOUNTED WITH TOP OF SWITCH AT 48" AFF, OR 44" AFF IF OVER OBSTRUCTION.
38. ALL OCCUPANCY SENSORS WITHIN ENCLOSED ROOMS ARE TO BE BE AUTOMATIC OFF, MANUAL ON. PROVIDE LIGHTING CONTROL SYSTEM CAPABLE OF THIS REQUIREMENT PER ENERGY CODE.

ELEVATOR

39. IF BATTERY LOWERING DEVICE IS PROVIDED, PROVIDE AUXILIARY CONTACTS AT FUSED DISCONNECT SWITCH & BREAKER.

MISCELLANEOUS

40. PROVIDE DECORA SWITCHES & OUTLETS IN UNITS & COMMON PUBLIC AREAS. TOGGLE SWITCHES & STANDARD OUTLETS ARE ACCEPTABLE IN MECH, ELEV, AND ELEC ROOMS.
41. PROVIDE ALL NECESSARY FIRE CAULKING & FIRE STOPPING FOR ALL ELECTRICAL EQUIPMENT.
42. TAMPER RESISTANT RECEPTACLES ARE REQUIRED FOR ALL 15A AND 20A 120V RECEPTACLES LOCATED IN DWELLING UNITS.
43. ALL ELECTRICAL ACCESS PANELS ARE TO BE PROVIDED BY THE ELECTRICIAN. SEE SPECIFICATIONS FOR MATERIALS AND APPROVED MANUFACTURERS.
44. IF MAGNETIC DOOR HOLDERS ARE 120V, PROVIDE POWER FROM NEAREST CONVENIENCE RECEPTACLE CIRCUIT.
45. SWITCHGEAR: PROVIDE HOUSEKEEPING PAD FOR ALL SWITCHGEAR. HOUSEKEEPING PAD TO BE LESS THAN 2" IN HEIGHT.
46. WATER SUBMETER REPEATERS TO BE LOCATED IN IDF CLOSETS, PLUGGED INTO THE SHOWN WALL OUTLETS.

ABBREVIATIONS

A	AMPERE
AC	ALTERNATING CURRENT, ABOVE COUNTER
AFF	ABOVE FINISHED FLOOR
AIC	AMPS INTERRUPTING CAPACITY
AL	ALUMINUM
AMP	AMPERE
ATS	AUTOMATIC TRANSFER SWITCH
AWG	AMERICAN WIRE GAUGE
BRKR	BREAKER
BLDG	BUILDING
BOH	BACK OF HOUSE
C	CONDUIT
CEC	CALIFORNIA ELECTRICAL CODE
CKT	CIRCUIT
CO	CARBON MONOXIDE
CLG	CEILING
CT	CURRENT TRANSFORMER
Cu	COPPER
CW	COOL WHITE
D/B	DESIGN/BUILD
DCO	DUPLEX CONVENIENCE OUTLET
DISP	GARBAGE DISPOSAL
DN	DOWN
DW	DISHWASHER
EXIST	EXISTING
EF	EXHAUST FAN
ELEC	ELECTRICAL
EMT	ELECTRICAL METALLIC TUBING
ENT	ELECTRICAL NON-METALLIC TUBING
ERRCS	EMERGENCY RADIO RESPONDER COVERAGE SYSTEM
EQUIP	EQUIPMENT
FACP	FIRE ALARM CONTROL PANEL
FLR	FLOOR
FLUOR	FLUORESCENT
FOH	FRONT OF HOUSE
GEC	GROUNDING ELECTRODE CONDUCTOR
GFCI	GROUND FAULT CIRCUIT INTERRUPTER
GND	GROUND
GRS	GALVANIZED RIGID STEEL
HID	HIGH INTENSITY DISCHARGE
HP	HORSEPOWER
HPWH	HEAT PUMP WATER HEATERS
HT	HEAT TRACE
IC	INSULATED CEILING RATED
IDF	INTERMEDIATE DISTRIBUTION FRAME
IG	ISOLATED GROUND
JT	JOINT TRENCH
KCMIL	THOUSAND CIRCULAR MILLS
KEC	KITCHEN EQUIPMENT CONTRACTOR
KVA	KILOVOLT AMPERES
KW	KILOWATT
LTG	LIGHTING
MATV	MASTER ANTENNA TELEVISION
MFR	MANUFACTURER
MIN	MINIMUM
MLO	MAIN LUGS ONLY
MPOE	MAIN POINT OF ENTRY
N	NEUTRAL
NIC	NOT IN CONTRACT
NEC	NATIONAL ELECTRICAL CODE (NFPA-70)
NEMA	NATIONAL ELECTRICAL MANUFACTURERS ASSOCIATION
NTS	NOT TO SCALE
OS	OCCUPANCY SENSOR
PC	PHOTOCELL
PNL	PANEL
POC	POINT OF CONNECTION
PT	POTENTIAL TRANSFORMER
PVC	POLYVINYL CHLORIDE
PWR	POWER
QTY	QUANTITY
RECEPT	RECEPTACLE
ROMEX	ELECTRICAL NM CABLE
SD	SMOKE DETECTOR
SER	SERVICE ENTRANCE CABLE
SPEC	SPECIFICATIONS
SW	SWITCH
SWBD	SWITCHBOARD
SWGR	SWITCHGEAR
TTB	TELEPHONE TERMINAL BOARD
TYP	TYPICAL
UG	UNDERGROUND
UL	UNDERWRITERS LABORATORIES
UON	UNLESS OTHERWISE NOTED
UTIL	UTILITY
V	VOLTS
VS	VACANCY SENSOR
W	WATTS
WW	WARM WHITE
WP	WEATHERPROOF
W/	WITH
W/O	WITHOUT
XFMR	TRANSFORMER
XFR	TRANSFER
Z	IMPEDANCE OR ZONE

LEGEND

- ## — LIGHT FIXTURE CALLOUT
- ILLUMINATED EXIT SIGN, ARROWS AS INDICATED
- $ — SINGLE POLE, SINGLE THROW LIGHT SWITCH, 20A (WP = WEATHERPROOF COVER)
- $ $_3$ — THREE-WAY LIGHT SWITCH, 20A
- $ $_4$ — FOUR-WAY LIGHT SWITCH, 20A
- $ $_T$ — TIMER SWITCH
- DIMMER SWITCH
- $ $_a$ — SWITCH, SINGLE POLE; WITH SWITCHING SUBSCRIPT 'a'
- x y $$ OS — DUAL SWITCHES, BOTH WITH OCCUPANCY SENSOR CONTROL
- $ $_{OS}$ — OCCUPANCY SENSOR, WALL MOUNTED
- OS — OCCUPANCY SENSOR, CEILING MOUNTED
- SINGLE RECEPTACLE, GROUNDED
- DUPLEX RECEPTACLE
- DUPLEX RECEPTACLE, 1/2 HOT
- IG — DUPLEX RECEPTACLE, ISOLATED GROUND
- GFCI — DUPLEX RECEPTACLE WITH GROUND FAULT INTERRUPTION (GFCI)
- DUPLEX RECEPTACLE WITH GROUND FAULT INTERRUPTION (GFCI) LOCATED ABOVE COUNTER
- QUAD RECEPTACLE, GROUNDED
- PC — PHOTOCELL
- WP GFCI — DUPLEX RECEPTACLE, GFCI WITH WEATHERPROOF COVER EXTRA DUTY AND WEATHER RESISTANT RECEPTACLE
- FLOOR OUTLET BOX WITH DUPLEX RECEPTACLE
- SPECIAL PURPOSE RECEPTACLE AS NOTED
- SD — PHOTOELECTRIC SMOKE ALARM (120V IN APARTMENT UNITS, POWERED BY FIRE ALARM SYSTEM ELSEWHERE)
- CO SD — COMBINATION SMOKE & CARBON MONOXIDE ALARM (120V IN APARTMENT UNITS, POWERED BY FIRE ALARM SYSTEM ELSEWHERE)
- THERMOSTAT
- JUNCTION BOX
- CCTV SECURITY CAMERA

DOOR ACCESS/CONTROL EQUIPMENT

- A — INTRUSION DETECTION (DOOR OR WINDOW)
- B — DOOR DETECTOR BUZZER IF PROPPED OPEN
- C — EMERGENCY EXIT ONLY, DOOR TO HAVE SOUNDER WHEN OPEN
- FA — DOOR TO AUTOMATICALLY OPEN IN A FIRE ALARM EVENT
- CR — KEY CARD READER ACCESS FOB

- TV — TELEVISION CABLE OUTLET
- TELEPHONE OUTLET, MOUNTED AT 18" UNLESS OTHERWISE INDICATED
- DATA OUTLET, MOUNTED AT 18" UNLESS OTHERWISE INDICATED
- TELEPHONE & DATA OUTLET IN DUPLEX BOX
- TV — SINGLE GANG JBOX WITH 1 DATA AND 1 TV OUTLET
- PANELBOARD
- ELECTRICAL DISTRIBUTION EQUIPMENT
- CIRCUIT BREAKER DISCONNECT SWITCH
- NON-FUSED DISCONNECT SWITCH
- FUSED DISCONNECT SWITCH
- MAGNETIC MOTOR STARTER
- COMBINATION MAGNETIC MOTOR STARTER AND DISCONNECT SWITCH
- C — CONTACTOR
- T — THERMOSTAT
- MOTOR CONNECTION
- $ $_M$ — MOTOR RATED SWITCH
- T — TRANSFORMER
- EQUIPMENT CONNECTION, REFER TO DESCRIPTION ON PLANS FOR WHICH SPECIFIC EQUIPMENT CONNECTION.

COMMON EQUIPMENT CONNECTIONS:

WH	120V CONNECTION TO WATER HEATERS
EF	120V CONNECTION TO EXHAUST FAN
DAMPER	120V CONNECTION TO MOTORIZED DAMPER
DSD	120V CONNECTION TO FIRE ALARM SYSTEM DUCT MOUNT SMOKE DETECTOR
FSD	120V CONNECTION TO FIRE ALARM SYSTEM FIRE SMOKE DAMPER

- 2-WAY COMM — 2-WAY COMMUNICATION DEVICE, REFER TO DETAIL 4/E6.03
- FSD — 120V CONNECTION TO FIRE/SMOKE DAMPER
- DOORBELL
- DOORBELL CHIME
- T — DOORBELL XFMR

A PART OF THE DESIGN/BUILD FIRE ALARM SYSTEM:

- HD — HEAT DETECTOR
- FS — SPRINKLER FLOW SWITCH
- TS — SPRINKLER VALVE TAMPER SWITCH
- HS — FIRE ALARM HORN/STROBE LIGHT
- H — FIRE ALARM HORN
- S — FIRE ALARM STROBE
- MH — MINI HORN
- F — FIRE ALARM PULL STATION
- CO — CARBON MONOXIDE DETECTOR POWERED BY FIRE ALARM SYSTEM
- ELECTRO-MAGNETIC DOOR HOLDER, POWERED BY FIRE ALARM SYSTEM

BIDDING NOTES

THE FOLLOWING SYSTEMS ARE TO BE INCLUDED IN THE BIDDING OF THE PROJECT. ANY QUESTIONS NEED TO BE PRESENTED DURING THE BIDDING PHASES. CHANGE ORDERS ARE NOT ALLOWED FOR ANY OF THE ITEMS LISTED BELOW:

1. POWER TO ALL POWERED DOORS INCLUDING GARAGE DOOR AND ALL NECESSARY WIRING & CONNECTIONS.
2. POWER TO ALL ELECTRONIC DOOR STRIKES (FROM NEAREST 120V GENERAL PURPOSE RECEPTACLE CIRCUIT).
3. RACKING IN PBX ROOM AND IDF ROOMS.
4. SMOKE GUARDS: PROVIDE 120V POWER TO DEVICE AND FIRE ALARM SMOKE DETECTOR LOCATED OUTSIDE EACH PAIR OF ELEVATOR DOORS. REFER TO ARCH PLANS FOR LOCATIONS AND QUANTITY. COORDINATE WITH FIRE ALARM CONTRACTOR.
5. ALL NECESSARY ROOF PENETRATIONS TO THE LIGHTING AND EQUIPMENT SHOWN PER PLANS.
6. ALL RECESSED ITEMS PENETRATING RATED ASSEMBLIES SHALL BE PROVIDED WITH FIRE RATED PROTECTION. CONTRACTOR SHALL PROVIDE FIRE PROTECTIVE DEVICES (INCLUDING LUMINARIES AND BOXES) TO MAINTAIN FIRE RATING.
7. ELECTRICAL CONTRACTOR SHALL PROVIDE FIRE CAULKING AND PUTTY PADS FOR PENETRATIONS THROUGH RATED ASSEMBLIES.
8. ELECTRICAL CONTRACTOR SHALL PROVIDE WIRING FOR DUCT SMOKE DETECTORS.
9. ALL FLOOR OUTLETS TO BE BRASS. PROVIDE AND INSTALL STEEL CITY SERIES FLOOR BOX 664-SC UNLESS OTHERWISE NOTED.
10. INSTALLATION OF ALL LOW VOLTAGE LIGHTING TRANSFORMERS AND REMOTE DRIVERS. NOT SHOWN ON PLANS, TO BE COORDINATED BY THE ELECTRICAL CONTRACTOR.
11. TRASH CHUTE SYSTEM WIRING PER INSTALLATION MANUAL.
12. LIGHTING IN GARAGES AND BOH SPACES: LIGHT FIXTURES AND EXIT SIGNS MAY NEED TO BE SUSPENDED DUE TO OTHER TRADES & INSULLATION, PROVIDE HANGING SUPPORTS WHERE NECESSARY. IN GARAGES OVER 10-FT HIGH, PROVIDE HANGERS TO MOUNT AT A MAX OF 10-FT.
13. CONTRACTORS MANUFACTURER SHALL PROVIDE A SELECTIVE COORDINATION STUDY OF THE ELEVATORS & EMERGENCY/LEGALLY REQUIRED STANDBY ELECTRICAL SYSTEM.
14. POWER TO ALL FIRE ALARM POWER SUPPLIES (PER DESIGN/BUILD FIRE ALARM PLANS).
15. CONNECTION TO ROOFTOP AMENITY EQUIPMENT (INCLUDING FIRE PITS WITH CIRCUITRY AS SHOWN).
16. UTILITY COMPANY REMOTE METER CONDUIT AND ANTENNA JBOX AS SHOWN PER PLANS.
17. PUMPS: CONDUIT AND WIRING FROM THE PUMP TO THE CONTROL BOX. CONTROLLER LOCATION TO BE PER PLUMBING CONTRACTOR.
18. AMENITY AREA COOKING HOODS TO HAVE ACCESSIBLE CONTROLS. ON/OFF SWITCH MAY NOT BE COMPATIBLE WITH THE SPECIFIED HOOD. PROVIDE BROAN 66W REMOTE 3-BUTTON WALL SWITCH WITH BROAN 40000-SERIES HOODS AS BASIS OF DESIGN. CONFIRM WITH ID PLANS PRIOR TO ANY INSTALLATION.

DESIGN/BUILD SYSTEMS

STRUCTURED CABLING (TELEPHONE, DATA, TV):
DESIGN AND PROVIDE COMPLETE, OPERATING, AND FULLY FUNCTIONAL TEL/DATA/TV WIRING SYSTEM PER OWNER & VENDOR REQUIREMENTS. SEE PLANS FOR OUTLET LOCATIONS, WIRING REQUIREMENTS, AND SERVICE ENTRANCE REQUIREMENTS. SUCCESSFUL SUB-CONTRACTOR IS RESPONSIBLE FOR WIRING TERMINATIONS AT THE OUTLETS AND RESPONSIBLE FOR COORDINATING WITH VENDOR ON WIRING TERMINATIONS AT THE EQUIPMENT. COORDINATE WITH ALL THE OWNER REQUESTED VENDORS FOR SCOPE DIFFERENTIATION. COORDINATE TERMINATION TYPES WITH EQUIPMENT VENDOR. VERTICAL RISERS ARE TO BE IN RACEWAY, HORIZONTAL WIRING TO BE CABLE. IT IS THE CONTRACTORS RESPONSIBILITY TO PROVIDE ALL CONDUIT AND LOW VOLTAGE WIRING WITH THE EXCEPTION OF WIRING UPSTREAM OF THE DEMARCATION AND TRUNKLINE CABLING (COORDINATE WITH VENDOR).

FIRE ALARM SYSTEM (283100):
DESIGN AND PROVIDE COMPLETE, OPERATING, AND FULLY FUNCTIONAL FIRE DETECTION ALARM SYSTEM THAT MEETS ALL LOCAL CODES AND ORDINANCES. SUCCESSFUL SUB-CONTRACTOR SHALL SUBMIT FULL SET OF PLANS TO OWNER, INDICATING DEVICE LOCATIONS, WIRING, CONNECTIONS, AND SPECIAL MOUNTING DETAILS. REFER TO ELECTRICAL PLANS FOR MAIN EQUIPMENT LOCATIONS. SUBMIT PLANS AND OBTAIN PERMIT FROM LOCAL AHJ. DEVICES SHOWN ON PLANS ARE FOR REFERENCE ONLY AND ARE ONLY INTENDED AS DESIGN INTENT.

ALL DWELLINGS UNITS AND SLEEPING UNITS SHALL BE PRE-WIRED TO SUPPORT FUTURE INSTALLATION OF VISIBLE NOTIFICATION APPLIANCES IN ALL UNITS. THE WIRING SHALL NOT BE LIMITED TO FIRE ALARM NOTIFICATION CIRCUITS AND THE ASSOCIATED JUNCTION BOXES, AND DEPENDING ON THE DESIGN MAY INCLUDE SIGNALING LINE OR INITIATING CIRCUITS. IN LIEU OF ACTUAL PRE-WIRING, APPROVED ELECTRICAL CONDUIT INSTALLED IN ALL UNITS WITH SUITABLE JUNCTION BOXES AND DIRECT TERMINATION AT THE FIRE ALARM CONTROL UNIT LOCATION WOULD BE AN ACCEPTABLE ALTERNATIVE. THE FIRE ALARM DESIGNER SHALL PROVIDE COMPLETE PLANS, WHICH SHALL INCLUDE DETAILS SHOWING HOW FUTURE VISIBLE APPLIANCE EXPANSIONS ARE TO BE ACCOMPLISHED. VISIBLE APPLIANCES, CONNECTIONS TO SMOKE ALARMS OR SYSTEM DETECTORS AND ADDITIONAL FIRE ALARM EQUIPMENT (NAC PANELS, POWER SUPPLIES, BATTERIES, ETC) NECESSARY FOR FUTURE EXPANSION NEED NOT BE INSTALLED UNTIL VISIBLE APPLIANCES ARE DEEMED NECESSARY. CFC 907.5.2.3.3

FIRE SMOKE DAMPERS REQUIRE A SMOKE DETECTOR TO BE LOCATED WITHIN ALL ROOMS SERVED BY THE DUCT SYSTEM TO INITIATE FIRE SMOKE DAMPER ACTUATION & HVAC UNIT SHUTDOWN. THIS IS TO BE INCORPORATED INTO THE FIRE ALARM SYSTEM. CBC 717.3.3.2.5

LOW FREQUENCY AUDIBLE NOTIFICATION APPLIANCES ARE REQUIRED WITHIN ALL SLEEPING UNITS.

LEED 10.2(b) | GPR D9.2: PROVIDE CO DETECTORS IN ALL ROOMS THAT SHARE A DOOR WITH THE GARAGE.

IN ELEVATOR SHAFTS, PROVIDE A VESDA AIR ASPIRATING SMOKE DETECTOR. PROVIDE CONNECTION TO FACP AND PROVIDE REMOTE LED INDICATOR (LOCATION TO BE BY FIRE ALARM CONTRACTOR APPROVED BY AHJ). CONFIRM WITH ARCHITECT IF REQUIRED.

ELECTRONIC SURVEILLANCE (282300):
DESIGN AND PROVIDE COMPLETE, OPERATING, AND FULLY FUNCTIONAL SECURITY CCTV CAMERA SYSTEM BASED ON OWNER REQUIREMENTS. ALL WIRING IS TO BE IN CONDUIT. CAMERAS TO BE WIRED TO A DVR LOCATED IN THE MANAGEMENT OFFICE. DVR TO HOLD 28 DAYS. CAMERAS TO BE GLOBE TYPE FOR READJUSTING. REFER TO PLANS FOR LOCATIONS.

ACCESS CONTROL 281300:
DESIGN AND PROVIDE COMPLETE, OPERATING, AND FULLY FUNCTIONAL FOB ENTRY SYSTEM WITH ENTRY CALL BOX BASED ON OWNER REQUIREMENTS. CARD READER SYSTEM TO BE PROGRAMMABLE WITH TIME ACCESS LIMITATIONS, AND TRACK USER DATA.

EMERGENCY RESPONDER RADIO COVERAGE SYSTEM (ERRCS):
CONTRACTOR SHALL PROVIDE A FULLY FUNCTIONAL AND CODE COMPLIANT ERRCS SYSTEM TO PROVIDE SUFFICIENT RADIO COVERAGE THROUGHOUT THE BUILDING. GENERAL CONTRACTOR SHALL CARRY A BUDGET TO COVER A FULL COVERAGE SYSTEM. DESIGN/BUILD CONTRACTOR SHALL PROVIDE DESIGN PLANS FOR DESIGN TEAM TO REVIEW. HEADEND EQUIPMENT TO BE LOCATED IN AN AREA THAT IS EASILY VENTILATED.

2-WAY COMMUNICATION SYSTEM:
CONTRACTOR SHALL PROVIDE A FULLY FUNCTIONAL AND CODE COMPLIANT 2-WAY COMMUNICATION SYSTEM. PLANS ARE TO BE SUBMITTED TO THE LOCAL FIRE DEPARTMENT FOR PERMITTING. DEVICES SHOWN ON PLANS ARE FOR REFERENCE ONLY AND ARE ONLY INTENDED AS DESIGN INTENT.

PHOTOVOLTAIC SYSTEM:
CONTRACTOR SHALL PROVIDE A FULLY FUNCTIONAL AND CODE COMPLIANT PHOTOVOLTAIC SYSTEM. PLANS ARE TO BE SUBMITTED TO THE LOCAL AHJ FOR PERMITTING. ALL WORK IS TO BE COORDINATED WITH THE DESIGN DOCUMENTS AND OTHER TRADES. ROOF CONDUITS ARE NOT TO CROSS ROOF PATHWAYS. COORDINATE SIZE OF SYSTEM WITH OWNER GREEN GOALS.

CODES

CODES:

- CALIFORNIA ELECTRIC CODE 2019
- CALIFORNIA BUILDING CODE 2019
- CALIFORNIA FIRE CODE 2019
- NATIONAL ELECTRIC CODE 2017
- CALIFORNIA TITLE-24 ENERGY CODE 2019
- CALIFORNIA GREEN BUILDING STANDARD 2019

LOW LEVEL EXIT SIGNS ARE NOT REQUIRED IN THE CORRIDORS FOR APARTMENT BUILDINGS (ONLY IN CORRIDORS OF HOTELS)

CITY MUNICIPAL CODE:

- 10% OF STALLS INSTALLED
- 20% LOAD ACCOUNTED FOR
- RACEWAY FROM ELEC ROOM TO GARAGE TO ACCOUNT FOR 100% OF STALLS

CONDITIONS OF APPROVAL

1. PROPOSED NEW EXTERIOR LIGHTING FIXTURES SHALL BE ADEQUATELY SHIELDED TO A POINT BELOW THE LIGHT BULB AND REFLECTOR TO PREVENT UNNECESSARY GLARE ONTO ADJACENT PROPERTIES.
2. THE APPLICANT SHALL SUBMIT, FOR REVIEW AND APPROVAL OF THE BUILDING OFFICIAL AND THE ZONING MANAGER, PLANS THAT SHOW THE LOCATION OF PARKING SPACES EQUIPPED WITH FULL ELECTRICAL CIRCUITS DESIGNATED FOR FUTURE PEV CHARGING (I.E. 'PEV-READY) PER THE REQUIREMENTS OF CHAPTER 15.04 OF THE OAKLAND MUNICIPAL CODE. BUILDING ELECTRICAL PLANS SHALL INDICATE SUFFICIENT ELECTRICAL CAPACITY TO SUPPLY THE REQUIRED PEV-READY PARKING SPACES.
3. THE APPLICANT SHALL SUBMIT, FOR REVIEW AND APPROVAL OF THE BUILDING OFFICIAL, PLANS THAT SHOW THE LOCATION OF INACCESSIBLE CONDUIT TO SUPPLY PEV-CAPABLE PARKING SPACES PER THE REQUIREMENTS OF CHAPTER 15.04 OF THE OAKLAND MUNICIPAL CODE. BUILDING ELECTRICAL PLANS SHALL INDICATE SUFFICIENT ELECTRICAL CAPACITY TO SUPPLY THE REQUIRED PEV-CAPABLE PARKING SPACES.
4. THE APPLICANT SHALL SUBMIT, FOR REVIEW AND APPROVAL OF THE BUILDING OFFICIAL, PLANS THAT SHOW THE LOCATION OF FUTURE ACCESSIBLE EV PARKING SPACES AS REQUIRED UNDER TITLE 24 CHAPTER 11B TABLE 11B-228.3.2.1, AND SPECIFY PLANS TO CONSTRUCT ALL FUTURE ACCESSIBLE EV PARKING SPACES WITH APPROPRIATE GRADE, VERTICAL CLEARANCE, AND ACCESSIBLE PATH OF TRAVEL TO ALLOW INSTALLATION OF ACCESSIBLE EV CHARGING STATION(S).

PRE-CONSTRUCTION MEETING

CONTRACTORS SHALL ATTEND A PRE-CONSTRUCTION MEETING WITH THE ENGINEER FOR THE PURPOSE OF REVIEWING THE WORK PRIOR TO ORDERING ANY EQUIPMENT OR PERFORMING ANY WORK. THE MEETING SHALL BE LOCATED AT THE PROJECT SITE ON A DATE AND TIME TO BE MUTUALLY AGREED. THE MEETING WILL BE A WORKING SESSION. THE MEETING WILL BE FACILITATED BY THE ENGINEER AND THE AGENDA WILL INCLUDE A DETAILED REVIEW OF THE PLANS AND SPECIFICATIONS, CROSS CHECK WITH OTHER TRADES FOR COORDINATION ISSUES, REVIEW OF PROPOSED PRODUCTS, REVIEW OF PLANNED MEANS AND METHODS,AND ON-SITE INVESTIGATION OF FIELD CONDITIONS RELATIVE TO EXISTING CONDITIONS THAT COULD AFFECT THE WORK. PERSONS ATTENDING THE MEETING SHALL BE KNOWLEDGEABLE OF THE PROJECT AND SHALL BE THE SPECIFIC PERSONS INTENDED TO CONTINUE WITH THE PROJECT THROUGH TO COMPLETION. IF REQUIRED, REVISED PLANS WILL BE ISSUED THROUGH OFFICIAL CHANNELS. CHANGES IN THE BID PRICE WILL BE DISCUSSED, BUT NO CHANGE ORDERS WILL BE ISSUED UNLESS PROCESSED THOUGH OFFICIAL CHANNELS. IT SHALL BE UNDERSTOOD THAT THE ENGINEER HAS NO AUTHORITY TO ISSUE CHANGE ORDERS.

THE FOLLOWING TRADES SHALL BE REPRESENTED FOR THE MINIMUM TIME INDICATED:

MECHANICAL SHEET METAL	2 HOURS
PLUMBING/PIPING	2 HOURS
ELECTRICAL	2 HOURS
GENERAL CONTRACTOR	ALL SESSIONS

DRAWING INDEX

DWG	DESCRIPTION	INCLUDED IN SET: 100% SD 05/11/2022	50% DD 07/15/2022	100% DD 09/16/2022	PRICING SET 11/11/2022	PERMIT SET 12/09/2022	SHEETS WITH REVISIONS
E0.00	LEGEND, NOTES, AND SHEET INDEX	●	●	●	●	●	
E0.01	LUMINAIRE SCHEDULE	●	●	●	●	●	
E0.02	LUMINAIRE SCHEDULE				●	●	
E2.01	BUILDING PLANS – LEVEL 1	●	●	●	●	●	
E2.02	BUILDING PLANS – LEVEL 2	●	●	●	●	●	
E2.03	BUILDING PLANS – LEVEL 3	●	●	●	●	●	
E2.04	BUILDING PLANS – LEVEL 4	●	●	●	●	●	
E2.05	BUILDING PLANS – LEVEL 5	●	●	●	●	●	
E2.06	BUILDING PLANS – LEVEL 6	●	●	●	●	●	
E2.07	BUILDING PLANS – ROOF	●	●	●	●	●	
E3.01	POWER DETAILS	●	●	●	●	●	
E3.02	POWER DETAILS	●	●	●	●	●	
E4.01	UNIT PLANS	●	●	●	●	●	
E4.02	UNIT PLANS	●	●	●	●	●	
E4.03	UNIT PLANS	●	●	●	●	●	
E5.01	ONELINE DIAGRAM	●	●	●	●	●	
E5.02	ONELINE DIAGRAM	●	●	●	●	●	
E5.03	LOAD CALCULATIONS	●	●	●	●	●	
E5.04	LOAD CALCULATIONS	●	●	●	●	●	
E5.05	PANEL SCHEDULES		●	●	●	●	
E5.06	PANEL SCHEDULES		●	●	●	●	
E5.07	FAULT CURRENT SCHEDULE				●	●	
E5.08	VOLTAGE DROP SCHEDULE				●	●	
E6.01	LOW VOLTAGE DIAGRAM	●	●	●	●	●	
E6.02	LOW VOLTAGE DETAILS	●	●	●	●	●	
E6.03	DETAILS AND DIAGRAMS	●	●	●	●	●	
E6.04	DETAILS AND DIAGRAMS	●	●	●	●	●	
E6.05	DETAILS AND DIAGRAMS	●	●	●	●	●	
E7.01	ENERGY CODE					●	
E7.02	ENERGY CODE					●	
E7.03	ENERGY CODE					●	
E7.04	ENERGY CODE					●	
E7.05	ENERGY CODE					●	
E7.06	ENERGY CODE					●	

PYATOK
1611 TELEGRAPH AVE.
SUITE 200
OAKLAND, CA 94612
T. 510.465.7010 | F. 510.465.8575
www.pyatok.com

THE UNITY COUNCIL
1900 FRUITVALE AVE
#2A
OAKLAND, CA 94601

EMERALD CITY ENGINEERS, INC
21705 Highway 99 Lynnwood, WA 98036 425-741-1200 tel / 1201 fax

2700 INTERNATIONAL
OAKLAND, CA 94601

STAMP: REGISTERED PROFESSIONAL ENGINEER ADAM C. FRENCH E19421 EXP. 3-31-23 ELECTRICAL STATE OF CALIFORNIA 12-09-22

ISSUE SCHEDULE

100 SD	5/11/22
50 DD	7/15/22
100 DD	9/16/22
PRICING SET	11/11/22
PERMIT SET	12/09/22

REVISION SCHEDULE

NO.	ISSUE	DATE

JOB NUMBER: 2049-008
DRAWN BY: TH
CHECKED BY: AF
ISSUE DATE: 12/09/2022
SCALE:
TITLE: **LEGEND, NOTES, AND SHEET INDEX**

SHEET: **E0.00**

PRELIMINARY - Not for Construction -

© 2019 PYATOK ARCHITECTURE & URBAN DESIGN

4/22/2022 6:28:22 PM

COPYRIGHT 2022, EMERALD CITY ENGINEERS, INC.
THUYNH J:\2049-008 2700 INTERNATIONAL, OAKLAND, CA\DWG\E000 LEGEND, NOTES, AND SHEET INDEX.DWG 12-01-2022 09:45

LUMINAIRE SCHEDULE

CALLOUT	SYMBOL	DESCRIPTION	LAMP	BALLAST	MOUNTING	MODEL	INPUT WATTS	VOLTS	NOTES
E1	○	SURFACE MOUNT CYLINDER DOWNLIGHT	(1) 5W LED	ELECTRONIC	SURFACE	BEGA LIGHTING: 66050-K3-(FINISH)+19538	5	120V 1P 2W	EXTERIOR CANOPIES. ARCHITECT SHALL SELECT FIXTURE FINISH. CONTRACTOR SHALL SUPPLY REMOTE POWER SUPPLY PER MANUFACTURER RECOMMENDATIONS. REMOTE PSU SHALL BE ACCESSIBLE, CONCEALED, AND VENTILATED PER MANUFACTURER RECOMMENDATIONS. REFER TO ARCHITECTURAL DETAIL FOR SPECIAL MOUNTING CONDITIONS.
E2		WALL SURFACE DIRECT-INDIRECT FACADE LED	(1) 20W LED	0-10V	WALL	HK LIGHTING: ZXL16-WM2-SQ-F-GSL-12-10-(20 UP/44 DOWN)-010-(FINISH)+CM5	20	120V 1P 2W	EXTERIOR FACADES. ARCHITECT SHALL SELECT FIXTURE FINISH. MOUNT PER ARCHITECTURAL ELEVATION.
E2A		WALL SURFACE DIRECT-INDIRECT FACADE LED	(1) 10W LED	0-10V	WALL	HK LIGHTING: ZXL16-WM-SQ-F-GSL-12-10-44-010-(FINISH)+CM5	10	120V 1P 2W	EXTERIOR FACADES. ARCHITECT SHALL SELECT FIXTURE FINISH. MOUNT PER ARCHITECTURAL ELEVATION.
E3	□	RECESSED SQUARE DOWNLIGHT	(1) 12W LED	0-10V	RECESSED	TECH LIGHTING: HOUSING: ENCL3S-F-L12 TRIM: ENCL3S-D-930-(REFLECTOR FINISH)-(FLANGE FINISH)	12	120V 1P 2W	EXTERIOR CANOPIES. ARCHITECT SHALL SELECT FIXTURE FINISH.
E4		WALL SURFACE DOWNLIGHT W/ INTEGRAL OCCUPANCY SENSOR	(1) 18W LED	ELECTRONIC	WALL	PERFORMANCE IN LIGHTING: M30F-18-T3-(FINISH)-3K-120-NA	18	120V 1P 2W	EXTERIOR ENTRANCES. ARCHITECT SHALL SELECT FIXTURE FINISH. MOUNT PER ARCHITECTURAL ELEVATION.
E5A		CATENARY MOUNTED DOWNLIGHT	(1) 10W LED	ELECTRONIC	STRING	HK LIGHTING: ZXL16-CAT-P-12V-10W-30-(FINISH)	10	120V 1P 2W	2ND FLOOR COURTYARD. ARCHITECT SHALL SELECT FIXTURE FINISH. CONTRACTOR SHALL SUPPLY REMOTE POWER SUPPLY PER MANUFACTURER RECOMMENDATIONS. REMOTE PSU SHALL BE ACCESSIBLE, CONCEALED, AND VENTILATED PER MANUFACTURER RECOMMENDATIONS. CONTRACTOR SHALL SUPPLY MANUFACTURER SHOP DRAWINGS BASED ON FIELD-VERIFIED DIMENSIONS FOR REVIEW BY ARCHITECT PRIOR TO ORDER. E5: HK LIGHTING-SUSPENSION HARDWARE AND CABLING AS PROVIDED BY MANUFACTURER.
E6		NICHE MOUNTED LINEAR STEPLIGHT	(1) 1.4W LED	0-10V	RECESSED	LUMINII: KBS-F-H-30K-(POWER FEED)-(LENGHTS PER DRAWINGS)	1.4	120V 1P 2W	2ND FLOOR COURTYARD. CONTRACTOR SHALL SUPPLY REMOTE POWER SUPPLY PER MANUFACTURER RECOMMENDATIONS. REMOTE PSU SHALL BE ACCESSIBLE, CONCEALED, AND VENTILATED PER MANUFACTURER RECOMMENDATIONS. CONTRACTOR SHALL SUPPLY MANUFACTURER SHOP DRAWINGS BASED ON FIELD-VERIFIED DIMENSIONS FOR REVIEW BY ARCHITECT PRIOR TO ORDER. REFER TO ARCHITECTURAL DETAIL FOR SPECIAL MOUNTING CONDITIONS.
E7		RECESSED WALL MOUNTED STEPLIGHT	(1) 5W LED	ELECTRONIC	RECESSED	HK LIGHTING: ZXL-SLR-3.0-12V-5W-27-27-(FINISH)	5	120V 1P 2W	EXTERIOR COURTYARD. ARCHITECT SHALL SELECT FIXTURE FINISH. CONTRACTOR SHALL SUPPLY REMOTE POWER SUPPLY PER MANUFACTURER RECOMMENDATIONS. REMOTE PSU SHALL BE ACCESSIBLE, CONCEALED, AND VENTILATED PER MANUFACTURER RECOMMENDATIONS.CONTRACTOR SHALL COORDINATE BACKBOX PLACEMENT IN PLANTER RETAINING WALL PRIOR TO CONCRETE POUR.
E8	▲	STEM MOUNTED FACADE UPLIGHT	(1) 3W LED	ELECTRONIC	SURFACE	HK LIGHTING: ZXL08-A-GSL-12V-3-30-51-(FINISH)	3	120V 1P 2W	2ND FLOOR COURTYARD. ARCHITECT SHALL SELECT FIXTURE FINISH. CONTRACTOR SHALL SUPPLY REMOTE POWER SUPPLY PER MANUFACTURER RECOMMENDATIONS. REMOTE PSU SHALL BE ACCESSIBLE, CONCEALED, AND VENTILATED PER MANUFACTURER RECOMMENDATIONS. REFER TO ARCHITECTURAL DETAIL FOR SPECIAL MOUNTING CONDITIONS.
E9		SURFACE-MOUNTED FLEXIBLE BARBEQUE LIGHT	(1) 7W LED	ELECTRONIC	SURFACE	FOCUS INDUSTRIES: BQFD02L48SS-25F	7	120V 1P 2W	2ND FLOOR COURTYARD. CONTRACTOR SHALL SUPPLY REMOTE POWER SUPPLY PER MANUFACTURER RECOMMENDATIONS. REMOTE PSU SHALL BE ACCESSIBLE, CONCEALED, AND VENTILATED PER MANUFACTURER RECOMMENDATIONS. REFER TO ARCHITECTURAL DETAIL FOR SPECIAL MOUNTING CONDITIONS.
F1	○	SURFACE MOUNTED DOWNLIGHT	(1) 10W LED	0-10V	SURFACE	DMF LIGHTING: DC4-SM-S-S-F-12-WF-30-(FINISH)-0-00-H	10	120V 1P 2W	CORRIDORS. ARCHITECT SHALL SELECT FIXTURE FINISH. CONTRACTOR SHALL SUPPLY COMPATIABLE DIMMING CONTROL PER MANUFACTURER RECOMMENDATIONS AND AT THE DIRECTION OF ENGINEER.
F2		RECESSED LINEAR DOWNLIGHT	(1) 13W LED	0-10V	RECESSED	LUMINII: SD-12-30K-LV15-(FINISH)	13	120V 1P 2W	UNIT ENTRIES. ARCHITECT SHALL SELECT FIXTURE FINISH. CONTRACTOR SHALL SUPPLY REMOTE POWER SUPPLY PER MANUFACTURER RECOMMENDATIONS. REMOTE PSU SHALL BE ACCESSIBLE, CONCEALED, AND VENTILATED PER MANUFACTURER RECOMMENDATIONS.CONTRACTOR SHALL SUPPLY COMPATIABLE DIMMING CONTROL PER MANUFACTURER RECOMMENDATIONS AND AT THE DIRECTION OF ENGINEER. REFER TO ARCHITECTURAL DETAIL FOR SPECIAL MOUNTING CONDITIONS.
F3		PENDANT DOWNLIGHT	(1) 15W LED	0-10V	PENDANT	3G LIGHTING: 3G-PMZ12-12-H90-30K-35D-UNV-DIM-(RAL FINISH NUMBER)-LOUVER FINISH-60	15	120V 1P 2W	LOBBY. CONTRACTOR SHALL SUPPLY COMPATIABLE DIMMING CONTROL PER MANUFACTURER RECOMMENDATIONS AND AT THE DIRECTION OF ENGINEER. CONTRACTOR SHALL SUPPLY FIXTURE IN CUSTOM RAL FINISH NUMBER SUPPLIED BY ARCHITECT.
F4		RECESSED LINEAR ASYMMETRIC WALL WASHER	(1) 8W LED	0-10V	RECESSED	ECOSENSE: N2-CSR-CR(LENGTHS PER DRAWING)-930-S-G-1D-MB-MB-40-MB-B-4	8	120V 1P 2W	LOBBY. CONTRACTOR SHALL SUPPLY COMPATIABLE DIMMING CONTROL PER MANUFACTURER RECOMMENDATIONS AND AT THE DIRECTION OF ENGINEER. CONTRACTOR SHALL SUPPLY MANUFACTURER SHOP DRAWINGS BASED ON FIELD-VERIFIED DIMENSIONS FOR REVIEW BY ARCHITECT PRIOR TO ORDER.
F5		RECESSED LINEAR	(1) 64W LED	0-10V	RECESSED	ECOSENSE: ND3-CS-(LENGTH PER DRAWINGS)-930-VL-F-VL-B-1D-(FINISH)-(FINISH)-40-(FINISH)-(FINISH)-4	64	120V 1P 2W	LEASING OFFICES. CONTRACTOR SHALL SUPPLY COMPATIABLE DIMMING CONTROL PER MANUFACTURER RECOMMENDATIONS AND AT THE DIRECTION OF ENGINEER.
F6		SURFACE LINEAR AMBIENT LUMINAIRE	(1) 7W LED	0-10V	SURFACE	AXIS LIGHTING: MBSLED-800-90-30-S-4-(FINISH)-UNV-DP-1-S	7	120V 1P 2W	ACCESSORY SPACES. CONTRACTOR SHALL SUPPLY COMPATIABLE DIMMING CONTROL PER MANUFACTURER RECOMMENDATIONS AND AT THE DIRECTION OF ENGINEER. NOTE THAT FIXTURE MOUNTS ONTO SINGLE GANG SWITCH BOX. CONTRACTOR SHALL CONFIRM CEILING PRIOR TO ORDER. IN RESTROOMS, MOUNT HORIZONTALLY AT 7' AFF.
F6A		SURFACE LINEAR AMBIENT LUMINAIRE	(1) 7W LED	0-10V	SURFACE	AXIS LIGHTING: MBSLED-800-90-30-S-4-(FINISH)-UNV-DP-1-S-OS(STAIRWELL)	7	120V 1P 2W	STAIRS. CONTRACTOR SHALL SUPPLY COMPATIABLE DIMMING CONTROL PER MANUFACTURER RECOMMENDATIONS AND AT THE DIRECTION OF ENGINEER. NOTE THAT FIXTURE MOUNTS ONTO SINGLE GANG SWITCH BOX. CONTRACTOR SHALL CONFIRM CEILING PRIOR TO ORDER.
F7		SURFACE LINEAR LOW-VOLTAGE TRACK	(1) LED	0-10V	SURFACE	WAC LIGHTING: S2-(LENGTHS)-BK REMOTE POWER SUPPLY: S2CPU-(POWER)-Z-BK		120V 1P 2W	COMMUNITY ROOM. CONTRACTOR SHALL SUPPLY COMPATIABLE DIMMING CONTROL PER MANUFACTURER RECOMMENDATIONS AND AT THE DIRECTION OF ENGINEER. CONTRACTOR SHALL SUPPLY REMOTE POWER SUPPLY PER MANUFACTURER RECOMMENDATIONS. REMOTE PSU SHALL BE ACCESSIBLE, CONCEALED, AND VENTILATED PER MANUFACTURER RECOMMENDATIONS. CONTRACTOR SHALL PROVIDE ALL POWER FEEDS, JOINERS, AND OTHER ACCESSORIES FOR A COMPLETE, FUNCTIONING, AND FINISHED SYSTEM. CONTRACTOR SHALL CONFIRM MOUNTING SURFACE TYPE PRIOR TO ORDER. PROVIDE REMOTE POWER SUPPLY SUFFICIENT TO POWER 5W/LF

PYATOK
1611 TELEGRAPH AVE.
SUITE 200
OAKLAND, CA 94612
T. 510.465.7010 | F. 510.465.8575
www.pyatok.com

THE UNITY COUNCIL
1900 FRUITVALE AVE
#2A
OAKLAND, CA
94601

EMERALD CITY ENGINEERS, INC
21705 Highway 99 Lynnwood, WA
98036 425-741-1200 tel / 1201 fax

2700 INTERNATIONAL

OAKLAND, CA 94601

STAMP:

REGISTERED PROFESSIONAL ENGINEER
ROMAN C. REYNOSO
E19427
EXP. 3-31-23
ELECTRICAL
STATE OF CALIFORNIA
12-09-22

ISSUE SCHEDULE

100 SD	5/11/22
50 DD	7/15/22
100 DD	9/16/22
PRICING SET	11/11/22
PERMIT SET	12/09/22

REVISION SCHEDULE

NO.	ISSUE	DATE

JOB NUMBER:	2049-008
DRAWN BY:	TH
CHECKED BY:	AF
ISSUE DATE:	12/09/2022
SCALE:	
TITLE:	

LUMINAIRE SCHEDULE

SHEET:

E0.01

PRELIMINARY - Not for Construction -

© 2019 PYATOK ARCHITECTURE & URBAN DESIGN

4/22/2022 6:28:22 PM

COPYRIGHT 2022, EMERALD CITY ENGINEERS, INC.
T:\2049\2049-008 2700 INTERNATIONAL, OAKLAND, CA\DWG\E001 LUMINAIRE SCHEDULE.DWG 11-29-2022 15:35

LUMINAIRE SCHEDULE (CONT.)

CALLOUT	SYMBOL	DESCRIPTION	LAMP	BALLAST	MOUNTING	MODEL	INPUT WATTS	VOLTS	NOTES
F7A		TRACK MOUNTED AMBIENT LINEAR DOWNLIGHT	(1) 25W LED	0–10V	SURFACE	WAC LIGHTING: S2DR48–1–930–BK	25	120V 1P 2W	COMMUNITY ROOM. CONTRACTOR SHALL SUPPLY COMPATIABLE DIMMING CONTROL PER MANUFACTURER RECOMMENDATIONS AND AT THE DIRECTION OF ENGINEER. CONNECT FIXTURES TO CIRCUIT 1 OF TRACK.
F7B		TRACK MOUNTED FIXED DOWNLIGHT	(1) 9W LED	0–10V	SURFACE	WAC LIGHTING: S2SD–1–8.5–F–930–(FINISH)	9	120V 1P 2W	COMMUNITY ROOM. CONTRACTOR SHALL SUPPLY COMPATIABLE DIMMING CONTROL PER MANUFACTURER RECOMMENDATIONS AND AT THE DIRECTION OF ENGINEER. CONNECT FIXTURES TO CIRCUIT 2 OF TRACK.
F9		UNDERCABINET DOWNLIGHT	(1) 5W LED	0–10V	SURFACE	WAC LIGHTING: LS–LED(LENGTH)–30–WT5	5	120V 1P 2W	COMMUNITY AND LAUNDRY ROOM. CONTRACTOR SHALL SUPPLY COMPATIABLE DIMMING CONTROL PER MANUFACTURER RECOMMENDATIONS AND AT THE DIRECTION OF ENGINEER. REFER TO ARCHITECTURAL DETAIL FOR SPECIAL MOUNTING CONDITIONS.
F11		RECESSED FIXED ROUND DOWNLIGHT	(1) 12W LED	0–10V	RECESSED	TECH LIGHTING: HOUSING: E2R–L–LO–930–40–A–I TRIM: E2R–L–F–O–(FINISH) PLASTER PLATE: 150E2RCL	12	120V 1P 2W	LOBBY. ARCHITECT SHALL SELECT FIXTURE FINISH. CONTRACTOR SHALL SUPPLY COMPATIABLE DIMMING CONTROL PER MANUFACTURER RECOMMENDATIONS AND AT THE DIRECTION OF ENGINEER.
F11A		RECESSED FIXED ROUND DOWNLIGHT	(1) 12W LED	0–10V	RECESSED	TECH LIGHTING: HOUSING: E2R–WC–LO–930–40–A–I TRIM: E2R–F–B–O–(FINISH)	12	120V 1P 2W	COMMUNITY ROOM. ARCHITECT SHALL SELECT FIXTURE FINISH. CONTRACTOR SHALL SUPPLY COMPATIABLE DIMMING CONTROL PER MANUFACTURER RECOMMENDATIONS AND AT THE DIRECTION OF ENGINEER.
F12		PENDANT LINEAR DOWNLIGHT	(1) 35W LED	0–10V	PENDANT	WAC LIGHTING: PD85648–AL–MOD(3000K)	35	120V 1P 2W	ENTRY LOBBY. HANG LIGHTS PER ARCHITECTURAL ELEVATIONS. PROVIDE WITH 3000K LED.
L2		48" X 2–1/8" LED WRAP, 3500K, 3900 LUMENS, DIMMABLE	(1) 33W LED 3500K	0–10V	SURFACE	PHILIPS DAY BRITE FSS 4 40L 835 UNV DIM	33	120V 1P 2W	BACK OF HOUSE
L2E		48" X 2–1/8" LED WRAP, 3500K, 3900 LUMENS, DIMMABLE, 1100 LUMEN EMERGENCY BALLAST	(1) 33W LED 3500K	0–10V, W/BATTERY	SURFACE	PHILIPS DAY BRITE FSS 4 40L 835 UNV DIM EMLED	33	120V 1P 2W	BACK OF HOUSE, EMERGENCY
001		4' LINEAR LED, VAPOR TIGHT	(1) 42W 4000K LED	DIMMING	CEILING	LITHONIA: VAP–4000LM–FST–WD–MVOLT–GZ10–40K–80CRI	42	120V 1P 2W	ELEV PIT
P1		LED STRIP 4' SOLID REFLECTOR 4000K, INTEGRAL OCCUPANCY SENSOR, DIM TO 40% WHEN UNOCCUPIED	(1) 31.4W LED, 4000K, 3856 LUMENS	INTEGRAL STEP DIM	SURFACE	PHILIPS DAY–BRITE, FSW 4 40L 840 UNV SDIM LSXR10	31.4	120V 1P 2W	PARKING GARAGE. FIXTURE TO BE MOUNTED NO HIGHER THAN 10–FT TO BOTTOM OF FIXTURE. SUSPEND FIXTURE WITH CABLE/CHAIN AS NEEDED. SET TIMER DELAY TO 20 MINUTES. WHEN UNOCCUPIED, DIM TO 40%, RAMP UP TO 100% WHEN OCCUPIED.
P1E		LED STRIP 4' SOLID REFLECTOR 4000K, INTEGRAL OCCUPANCY SENSOR, STEP DIM TO 40%, 1000 LUMEN INTEGRAL BATTERY	(1) 31.4W LED, 4000K, 3856 LUMENS	STEP DIM W/BATTERY	SURFACE	PHILIPS DAY–BRITE, FSW 4 40L 840 UNV SDIM LSXR10 EMLED	31.4	120V 1P 2W	PARKING GARAGE, EMERGENCY. FIXTURE TO BE MOUNTED NO HIGHER THAN 10–FT TO BOTTOM OF FIXTURE. SUSPEND FIXTURE WITH CABLE AS NEEDED. SET TIMER DELAY TO 20 MINUTES. WHEN UNOCCUPIED, DIM TO 40%, RAMP UP TO 100% WHEN OCCUPIED.
U2		24" WALL SURFACE MOUNT VANITY, LED	(1) 22W LED 90CRI	ELECTRONIC	WALL	WAC LIGHTING: MORDERN FORMS #WS–3624–BN OXYGEN LIGHTING: APOLLO SERIES (24" TO 48") MAXIM 52002BZ (24" VANITY, BRONZE FINISH)	22	120V 1P 2W	UNIT BATHROOM VANITY LIGHT
U3		6 INCH LED SURFACE MOUNT DOWNLIGHT, WHITE HOUSING, 675 LUMENS, 3000K, 90 CRI	(1) 13.2W LED 3000K, 90CRI	DIMMING	CEILING	COOPER LIGHTING – HALO SLD606930WH PHILIPS SLIMSURFACE S 5 R 9 30K 7 (5" 650 LUMENS) DMF LIGHTING DRDH N JO, DRD2M 7 9 30, DRD2T R J S WH	13.2	120V 1P 2W	UNIT
U4		UNDERCOUNTER LIGHTING, LED, 0.72" TALL, VARIABLE LENGTH. ADJUSTABLE COLOR TEMPERATURE	(1) LED, 2700K–4000K, 90 CRI	ELECTRONIC	CEILING	COOPER HALO HU30 (09, 18, 24, 36, 48) D 9 30 P	7.3	120V 1P 2W	UNIT, KITCHEN UNDERCOUNTER LIGHTING. CONTRACTOR TO CONFIRM EXACT LENGTH OF FIXTURE AT ALL KITCHEN CABINET LOCATIONS. PROVIDE ALL CONNECTORS AS NECESSARY FOR A COMPLETE SYSTEM.
U7		52" CEILING MOUNTED PADDLE FAN WITH LIGHT, BRUSHED STEEL, COMES WITH DUAL CONTROL SWITCH (9.2" DEEP)	(1) 17W LED, DIMMABLE, 3000K	DIMMING	CEILING	MONTE CARLO 3CLYR52RZWD–V1, WITH INTEGRATED LED (JA8 COMPLIANT) CONTROL: MCRC4RW	17	120V 1P 2W	UNIT BEDROOMS/LIVING ROOMS, CONFIRM WIRING FROM SWITCH TO FAN/LIGHT
U9A		SMALL FLUSH MOUNT LED	(1) 10W LED	ELECTRONIC	CEILING	TBD	10	120V 1P 2W	UNIT, DINING
U9B		LARGE FLUSH MOUNT LED	(1) 20W LED	ELECTRONIC	CEILING	TBD	20	120V 1P 2W	UNIT, LIVING ROOM
X1		THERMOPLASTIC LED EXIT SIGN, UNIVERSAL 1–2 FACE, RED LETTERING	(1) 2W LED	ELEC W/BATTERY	WALL/CEILING	LITHONIA LQM S W 3 R MVOLT EL N SD	2	120V 1P 2W	FIXTURE TO BE TITLE 20 COMPLIANT. EXIT SIGNS, BACKUP BATTERY BALLAST PROVIDES SECONDARY POWER SOURCE.
X2		EXTERIOR RATED LED EXIT SIGN, SINGLE OR DOUBLE SIDED, UNIVERSAL MOUNT, RED LETTERING, WHITE HOUSING	(1) 2W LED	BATTERY	WALL	LITHONIA WLTE W 1/2 R EL	2	120V 1P 2W	FIXTURE TO BE TITLE 20 COMPLIANT. UNIVERSAL KNOCK–OUTS FOR DIRECTIONAL MARKERS. BACKUP BATTERY BALLAST PROVIDES SECONDARY POWER SOURCE. SINGLE SHADED OR DOUBLE SHADED QUADRANTS SHOWN ON ARCH PLANS DEPICT THE PATH OF EGRESS DIRECTION.
Z2		EXTERIOR WEDGE LIGHT, 11.5"W X 9"H X 7"D, FULL CUTOFF, FORWARD THROW	(1) 15W LED 4000K	ELECTRONIC	WALL	LITHONIA WDGE2 LED P2 40K 90 CRI VF MVOLT DDBXD	15	120V 1P 2W	EXTERIOR

CA TITLE 24 2019 – RESIDENTIAL LIGHTING

- ALL IN–UNIT FIXTURES TO BE HIGH EFFICACY.
- ALL INSEPERABLE LED'S TO BE JA8 APPENDIX APPROVED.
- ALL MEDIUM BASED + GU24 LED LAMPS TO BE JA8–2019–E APPROVED (WITH MARKINGS)
- ALL RECESSED DOWNLIGHTS TO BE JA8 APPENDIX APPROVED
- DOCUMENTATION FOR THE ABOVE JA8 + JA8–2019–E REQUIREMENTS SHALL BE PROVIDED DURING SUBMITTAL PROCESS.
- ALL FORWARD PHASE CUT DIMMERS USED WITH LED SHALL COMPLY WITH NEMA SSL 7A

REFER TO ARCHITECTURAL AND LANDSCAPE PLANS FOR FIXTURE DIMENSIONS.

4/22/2022 6:28:22 PM

COPYRIGHT 2022, EMERALD CITY ENGINEERS, INC.
T:\2049 JOBS\2049-008 2700 INTERNATIONAL, OAKLAND, CA\DWG\E002 LUMINAIRE SCHEDULE.DWG 11-29-2022 15:35

PYATOK
1611 TELEGRAPH AVE.
SUITE 200
OAKLAND, CA 94612
T. 510.465.7010 | F. 510.465.8575
www.pyatok.com

THE UNITY COUNCIL
1900 FRUITVALE AVE
#2A
OAKLAND, CA
94601

EMERALD CITY ENGINEERS, INC
21705 Highway 99 Lynnwood, WA
98036 425-741-1200 tel / 1201 fax

2700 INTERNATIONAL

OAKLAND, CA 94601

STAMP:

REGISTERED PROFESSIONAL ENGINEER
ROMAN C. PEKOVICH
E19427
EXP. 3-31-23
ELECTRICAL
STATE OF CALIFORNIA
12-09-22

ISSUE SCHEDULE

100 SD	5/11/22
50 DD	7/15/22
100 DD	9/16/22
PRICING SET	11/11/22
PERMIT SET	12/09/22

REVISION SCHEDULE

NO.	ISSUE	DATE

JOB NUMBER:	2049-008
DRAWN BY:	TH
CHECKED BY:	AF
ISSUE DATE:	12/09/2022
SCALE:	
TITLE:	**LUMINAIRE SCHEDULE**
SHEET:	**E0.02**

PRELIMINARY - Not for Construction -

© 2019 PYATOK ARCHITECTURE & URBAN DESIGN

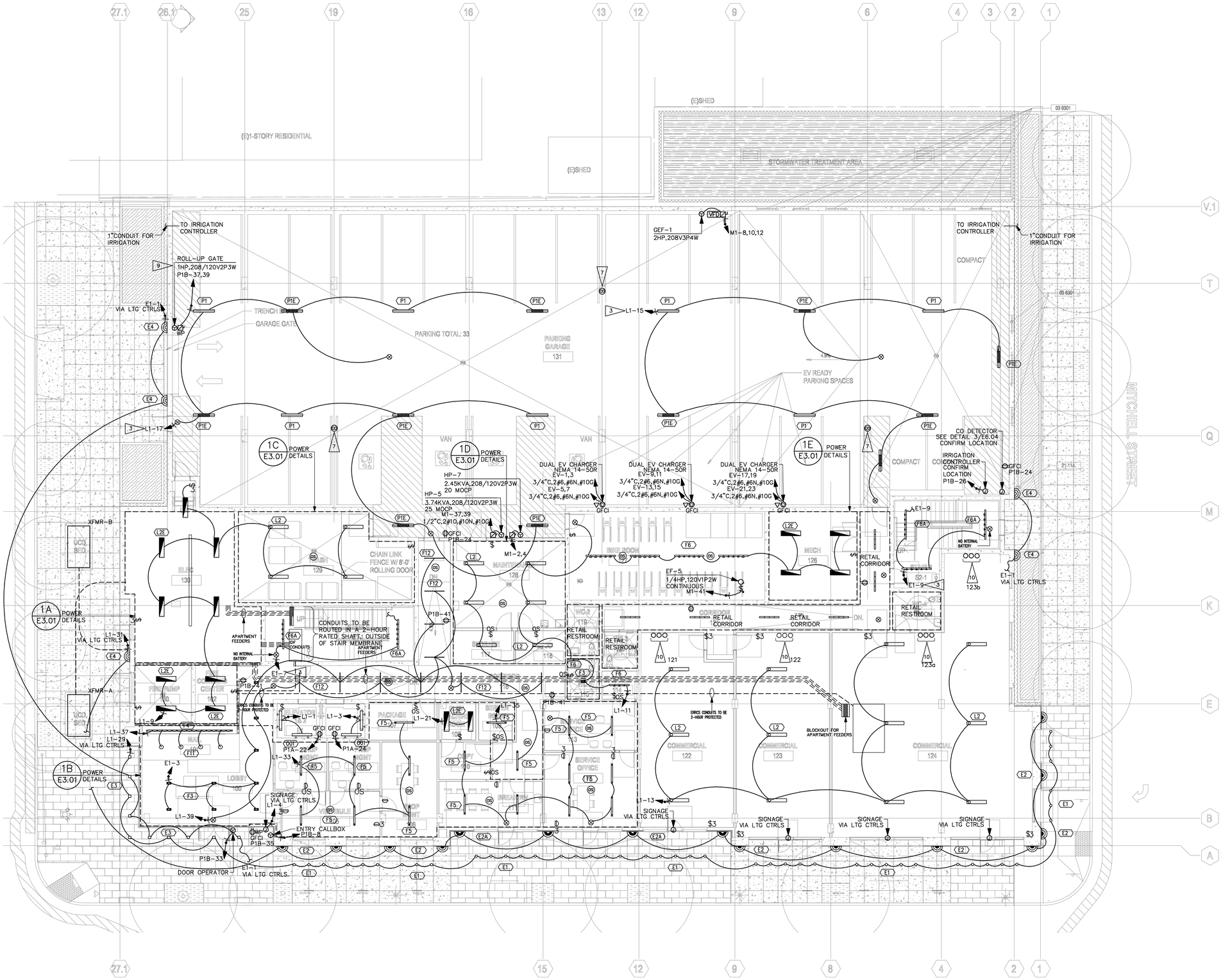

LEVEL 1

SCALE: 1/8"=1'

4/22/2022 6:28:22 PM

COPYRIGHT 2022, EMERALD CITY ENGINEERS, INC.
T:\PROJ\2049-008 2700 INTERNATIONAL, OAKLAND, CA\DWG\E201 - BUILDING PLANS - LEVEL 1.DWG 12-05-2022 16:56

FLAG NOTES

1. ELEVATOR LOBBY LIGHTING TO REMAIN CONTINUOUSLY ON 24 HOURS A DAY. LIGHTING NOT TO BE CONTROLLED BY CORRIDOR OCCUPANCY SENSORS.
2. MULTI-LEVEL DIMMING NOT REQUIRED PER CEC 130.1(a). ROOM IS LESS THAN 0.5 W/SF OR LESS THAN 100 SF.
3. T24: PROVIDE MANUAL SWITCH WITH ANNUNCIATING MEANS FOR LIGHTING CIRCUITS IN STAIRS, PARKING GARAGES, PUBLIC RESTROOMS, AND CORRIDORS (SEE PLANS FOR SPECIFIC CIRCUITRY). LOCATE SWITCH WITHIN CLOSE VICINITY TO THE PANEL FEEDING THE LIGHTING CIRCUIT. SWITCHES MAY BE NOT ACCESSIBLE TO UNAUTHORIZED PERSONNEL PER CEC 130.1(a)(2) (EXCEPTION 2). PROVIDE PERMANENT LABELS ANNOTATING AREA THE SWITCH CONTROLS. SWITCHES TO BE ILLUMINATING, LEVITON 5631-2W.
4. DAYLIGHT ZONE PHOTOCELL NOT REQUIRED PER CEC EXCEPTION 1 TO SECTION 130.1(D)2. DAYLIGHT ZONE IS LESS THAN 120 WATTS.
5. UNIT PORCH LIGHTING/POWER TO BE CIRCUITED TO CORRESPONDING UNIT PANEL. REFER TO UNIT PLANS FOR SWITCH LOCATIONS.
6. PROVIDE "THERMOSTAT" STYLE PLASTIC LOCKING COVER TO PROTECT DIMMER SWITCHES.
7. CO SENSOR SYSTEM PROVIDED BY MECH. CONTRACTOR. PROVIDE CONDUIT, CONFIRM ALL ROUTING WITH MECH. CONTRACTOR PRIOR TO INSTALLATION. CONFIRM LOCATION OF HEADEND EQUIPMENT. REFER TO 3/E6.04.
8. PROVIDE A REMOTE CALL STATION FOR RESCUE ASSISTANCE 2-WAY COMMUNICATION DEVICE. REFER TO DETAIL 4/E6.04 FOR WIRING DIAGRAM.
9. CONFIRM VOLTAGE/PHASE REQUIREMENTS WITH SUBMITTAL PRIOR TO INSTALLATION.
10. RETAIL: PROVIDE THE FOLLOWING CONDUITS TO EACH RETAIL SPACE: (1) 3" CONDUIT TO MDP FOR POWER, PROVIDE (2) 1" CONDUITS FOR LOW VOLTAGE TO MPOE.
11. PRIMARY DAYLIGHT ZONE.
12. SECONDARY DAYLIGHT ZONE.

SHEET NOTES

1. CORRIDORS T24: TO MEET CEC 130.1(C)(7)A, LIGHTING REDUCTION IN CORRIDORS, DIM CORRIDORS TO 50% WHEN UNOCCUPIED. ZONE OCCUPANCY SENSOR DEVICES ON EACH SIDE OF FIREWALL TOGETHER. PROVIDE SEPARATE RELAY FOR EMERGENCY/NONEMERGENCY AND CONFIRM ALL DIMMING TYPES, PROVIDE NECESSARY COMPONENTS FOR A FULL SYSTEM.
2. EMERGENCY: ALL EMERGENCY WIRING MUST BE KEPT INDEPENDENT FROM ALL OTHER WIRING, PER NEC 700.10(B)
3. LOBBY LIGHTING TO BE ON 24/7.
4. SUSPEND LIGHTS AND EXIT SIGNS IN ALL AREAS OVER 10FT, THIS INCLUDES GARAGE, BACK OF HOUSE, 2-STORY TALL AMENITY/LOBBIES, ETC. SUSPEND OTHER UTILITIES IN BOH AND GARAGE AREAS.
5. PROVIDE AN UNSWITCHED HOT TO ALL BATTERY BALLASTS, EMERGENCY FIXTURES, AND EXIT SIGNS FROM DESIGNATED CIRCUIT.
6. EACH EXIT SIGN TO HAVE JUNCTION BOX INSTALLED NEXT TO FIXTURE TO PREVENT EXIT SIGNS FROM BEING USED AS A JUNCTION BOX FOR OTHER LIGHTS PER CEC 700.10(B).
7. NOT USED.
8. DEMAND RESPONSE CONTROLS ARE NOT REQUIRED SINCE THE BUILDING HAS LESS THAN 10,000 SF OF SPACE OVER .5 W/SF.
9. STAIRWELL T24: TO MEET CEC 130.1(C)(7)A, LIGHTING REDUCTION IN STAIRWELLS, DIM STAIRWELLS TO 50% WHEN UNOCCUPIED THROUGH INTEGRAL OCCUPANCY SENSORS.
10. GARAGE T24 TO MEET CEC 130.1(C)(7)B, LIGHTING REDUCTION IN GARAGE, DIM GARAGE FIXTURES TO 50% WHEN UNOCCUPIED THROUGH INTEGRAL OCCUPANCY SENSORS.

PYATOK
1611 TELEGRAPH AVE.
SUITE 200
OAKLAND, CA 94612
T. 510.465.7010 | F. 510.465.8575
www.pyatok.com

THE UNITY COUNCIL
1900 FRUITVALE AVE
#2A
OAKLAND, CA 94601

EMERALD CITY ENGINEERS, INC
21705 Highway 99 Lynnwood, WA 98036 425-741-1200 tel / 1201 fax

2700 INTERNATIONAL

OAKLAND, CA 94601

STAMP:

REGISTERED PROFESSIONAL ENGINEER — ANDREW C. FRENCH — 21942 — EXP. 3-31-23 — ELECTRICAL — STATE OF CALIFORNIA
12-09-22

ISSUE SCHEDULE

100 SD	5/11/22
50 DD	7/15/22
100 DD	9/16/22
PRICING SET	11/11/22
PERMIT SET	12/09/22

REVISION SCHEDULE

NO.	ISSUE	DATE

JOB NUMBER:	2049-008
DRAWN BY:	TH
CHECKED BY:	AF
ISSUE DATE:	12/09/2022
SCALE:	

TITLE:

BUILDING PLANS - LEVEL 1

SHEET:

E2.01

PRELIMINARY - Not for Construction -

© 2019 PYATOK ARCHITECTURE & URBAN DESIGN

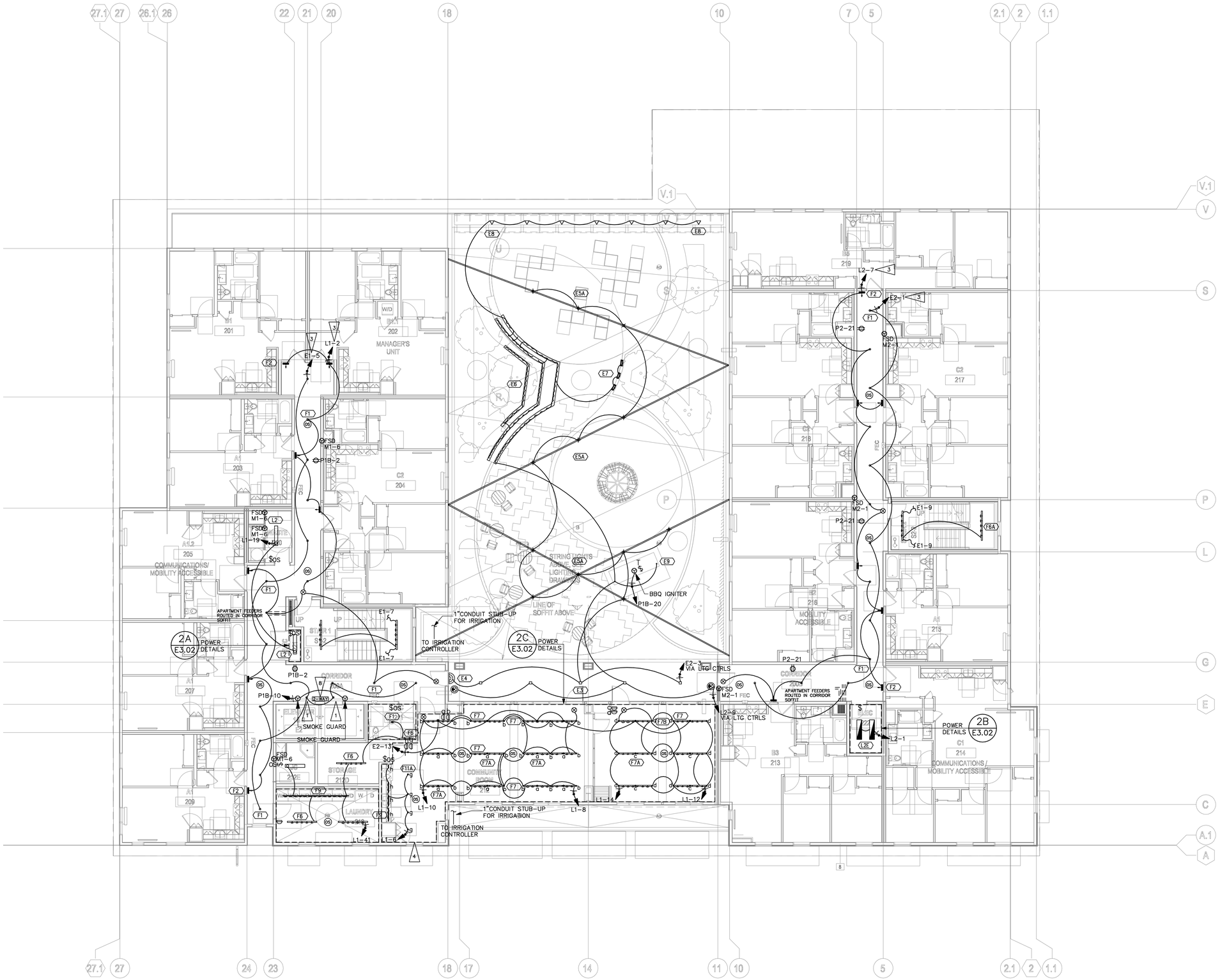

LEVEL 2

SCALE: 1/8"=1'

N

4/22/2022 6:28:22 PM

COPYRIGHT 2022, EMERALD CITY ENGINEERS, INC.
T:\TH\H J:\2049-008 2700 INTERNATIONAL, OAKLAND, CA\DWG\E202 - BUILDING PLANS - LEVEL 2.DWG 11-29-2022 15:34

FLAG NOTES

1. ELEVATOR LOBBY LIGHTING TO REMAIN CONTINUOUSLY ON 24 HOURS A DAY. LIGHTING NOT TO BE CONTROLLED BY CORRIDOR OCCUPANCY SENSORS.
2. MULTI-LEVEL DIMMING NOT REQUIRED PER CEC 130.1(a). ROOM IS LESS THAN 0.5 W/SF OR LESS THAN 100 SF.
3. T24: PROVIDE MANUAL SWITCH WITH ANNUNCIATING MEANS FOR LIGHTING CIRCUITS IN STAIRS, PARKING GARAGES, PUBLIC RESTROOMS, AND CORRIDORS (SEE PLANS FOR SPECIFIC CIRCUITRY). LOCATE SWITCH WITHIN CLOSE VICINITY TO THE PANEL FEEDING THE LIGHTING CIRCUIT. SWITCHES MAY BE NOT ACCESSIBLE TO UNAUTHORIZED PERSONNEL PER CEC 130.1(a)(2) (EXCEPTION 2). PROVIDE PERMANENT LABELS ANNOTATING AREA THE SWITCH CONTROLS. SWITCHES TO BE ILLUMINATING, LEVITON 5631-2W.
4. DAYLIGHT ZONE PHOTOCELL NOT REQUIRED PER CEC EXCEPTION 1 TO SECTION 130.1(D)2. DAYLIGHT ZONE IS LESS THAN 120 WATTS.
5. UNIT PORCH LIGHTING/POWER TO BE CIRCUITED TO CORRESPONDING UNIT PANEL. REFER TO UNIT PLANS FOR SWITCH LOCATIONS.
6. PROVIDE "THERMOSTAT" STYLE PLASTIC LOCKING COVER TO PROTECT DIMMER SWITCHES.
7. CO SENSOR SYSTEM PROVIDED BY MECH. CONTRACTOR. PROVIDE CONDUIT, CONFIRM ALL ROUTING WITH MECH. CONTRACTOR PRIOR TO INSTALLATION. CONFIRM LOCATION OF HEADEND EQUIPMENT. REFER TO 3/E6.04.
8. PROVIDE A REMOTE CALL STATION FOR RESCUE ASSISTANCE 2-WAY COMMUNICATION DEVICE. REFER TO DETAIL 4/E6.04 FOR WIRING DIAGRAM.
9. CONFIRM VOLTAGE/PHASE REQUIREMENTS WITH SUBMITTAL PRIOR TO INSTALLATION.
10. RETAIL: PROVIDE THE FOLLOWING CONDUITS TO EACH RETAIL SPACE: (1) 3" CONDUIT TO MDP FOR POWER, PROVIDE (2) 1" CONDUITS FOR LOW VOLTAGE TO MPOE.
11. PRIMARY DAYLIGHT ZONE.
12. SECONDARY DAYLIGHT ZONE.

SHEET NOTES

1. CORRIDORS T24: TO MEET CEC 130.1(C)(7)A, LIGHTING REDUCTION IN CORRIDORS, DIM CORRIDORS TO 50% WHEN UNOCCUPIED. ZONE OCCUPANCY SENSOR DEVICES ON EACH SIDE OF FIREWALL TOGETHER. PROVIDE SEPARATE RELAY FOR EMERGENCY/NONEMERGENCY AND CONFIRM ALL DIMMING TYPES, PROVIDE NECESSARY COMPONENTS FOR A FULL SYSTEM.
2. EMERGENCY: ALL EMERGENCY WIRING MUST BE KEPT INDEPENDENT FROM ALL OTHER WIRING, PER NEC 700.10(B)
3. LOBBY LIGHTING TO BE ON 24/7.
4. SUSPEND LIGHTS AND EXIT SIGNS IN ALL AREAS OVER 10FT, THIS INCLUDES GARAGE, BACK OF HOUSE, 2-STORY TALL AMENITY/LOBBIES, ETC. SUSPEND OTHER UTILITIES IN BOH AND GARAGE AREAS.
5. PROVIDE AN UNSWITCHED HOT TO ALL BATTERY BALLASTS, EMERGENCY FIXTURES, AND EXIT SIGNS FROM DESIGNATED CIRCUIT.
6. EACH EXIT SIGN TO HAVE JUNCTION BOX INSTALLED NEXT TO FIXTURE TO PREVENT EXIT SIGNS FROM BEING USED AS A JUNCTION BOX FOR OTHER LIGHTS PER CEC 700.10(B).
7. NOT USED.
8. DEMAND RESPONSE CONTROLS ARE NOT REQUIRED SINCE THE BUILDING HAS LESS THAN 10,000 SF OF SPACE OVER .5 W/SF.
9. STAIRWELL T24: TO MEET CEC 130.1(C)(7)A, LIGHTING REDUCTION IN STAIRWELLS, DIM STAIRWELLS TO 50% WHEN UNOCCUPIED THROUGH INTEGRAL OCCUPANCY SENSORS.
10. GARAGE T24 TO MEET CEC 130.1(C)(7)B, LIGHTING REDUCTION IN GARAGE, DIM GARAGE FIXTURES TO 50% WHEN UNOCCUPIED THROUGH INTEGRAL OCCUPANCY SENSORS.

PYATOK
1611 TELEGRAPH AVE.
SUITE 200
OAKLAND, CA 94612
T. 510.465.7010 | F. 510.465.8575
www.pyatok.com

THE UNITY COUNCIL
1900 FRUITVALE AVE
#2A
OAKLAND, CA 94601

EMERALD CITY ENGINEERS, INC
21705 Highway 99 Lynnwood, WA 98036 425-741-1200 tel / 1201 fax

2700 INTERNATIONAL

OAKLAND, CA 94601

STAMP:

REGISTERED PROFESSIONAL ENGINEER
ANDREW C. FISCHER
19421
EXP. 3-31-23
ELECTRICAL
STATE OF WASHINGTON
12-07-22

ISSUE SCHEDULE

100 SD	5/11/22
50 DD	7/15/22
100 DD	9/16/22
PRICING SET	11/11/22
PERMIT SET	12/09/22

REVISION SCHEDULE

NO.	ISSUE	DATE

JOB NUMBER:	2049-008
DRAWN BY:	TH
CHECKED BY:	AF
ISSUE DATE:	12/09/2022
SCALE:	
TITLE:	BUILDING PLANS - LEVEL 2

SHEET:

E2.02

PRELIMINARY - Not for Construction -

© 2019 PYATOK ARCHITECTURE & URBAN DESIGN

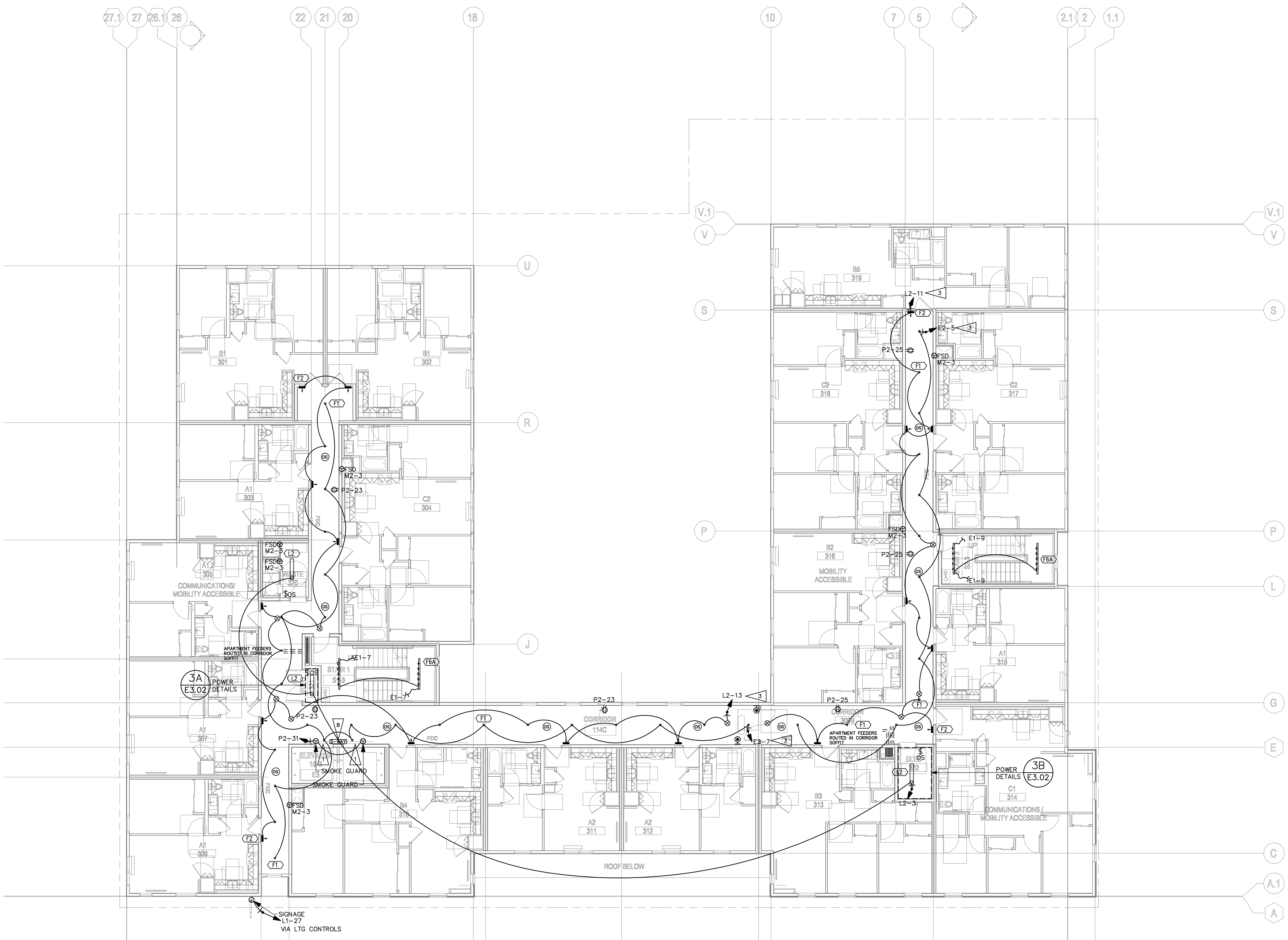

LEVEL 3

SCALE: 1/8"=1'

FLAG NOTES

1. ELEVATOR LOBBY LIGHTING TO REMAIN CONTINUOUSLY ON 24 HOURS A DAY. LIGHTING NOT TO BE CONTROLLED BY CORRIDOR OCCUPANCY SENSORS.
2. MULTI–LEVEL DIMMING NOT REQUIRED PER CEC 130.1(b). ROOM IS LESS THAN 0.5 W/SF OR LESS THAN 100 SF.
3. T24: PROVIDE MANUAL SWITCH WITH ANNUNCIATING MEANS FOR LIGHTING CIRCUITS IN STAIRS, PARKING GARAGES, PUBLIC RESTROOMS, AND CORRIDORS (SEE PLANS FOR SPECIFIC CIRCUITRY). LOCATE SWITCH WITHIN CLOSE VICINITY TO THE PANEL FEEDING THE LIGHTING CIRCUIT. SWITCHES MAY BE NOT ACCESSIBLE TO UNAUTHORIZED PERSONNEL PER CEC 130.1(a)(2) (EXCEPTION 2). PROVIDE PERMANENT LABELS ANNOTATING AREA THE SWITCH CONTROLS. SWITCHES TO BE ILLUMINATING, LEVITON 5631–2W.
4. DAYLIGHT ZONE PHOTOCELL NOT REQUIRED PER CEC EXCEPTION 1 TO SECTION 130.1(D)2. DAYLIGHT ZONE IS LESS THAN 120 WATTS.
5. UNIT PORCH LIGHTING/POWER TO BE CIRCUITED TO CORRESPONDING UNIT PANEL. REFER TO UNIT PLANS FOR SWITCH LOCATIONS.
6. PROVIDE "THERMOSTAT" STYLE PLASTIC LOCKING COVER TO PROTECT DIMMER SWITCHES.
7. CO SENSOR SYSTEM PROVIDED BY MECH. CONTRACTOR. PROVIDE CONDUIT, CONFIRM ALL ROUTING WITH MECH. CONTRACTOR PRIOR TO INSTALLATION. CONFIRM LOCATION OF HEADEND EQUIPMENT. REFER TO 3/E6.04.
8. PROVIDE A REMOTE CALL STATION FOR RESCUE ASSISTANCE 2–WAY COMMUNICATION DEVICE. REFER TO DETAIL 4/E6.04 FOR WIRING DIAGRAM.
9. CONFIRM VOLTAGE/PHASE REQUIREMENTS WITH SUBMITTAL PRIOR TO INSTALLATION.
10. RETAIL: PROVIDE THE FOLLOWING CONDUITS TO EACH RETAIL SPACE: (1) 3" CONDUIT TO MDP FOR POWER, PROVIDE (2) 1" CONDUITS FOR LOW VOLTAGE TO MPOE.
11. PRIMARY DAYLIGHT ZONE.
12. SECONDARY DAYLIGHT ZONE.

SHEET NOTES

1. CORRIDORS T24: TO MEET CEC 130.1(C)(7)A, LIGHTING REDUCTION IN CORRIDORS, DIM CORRIDORS TO 50% WHEN UNOCCUPIED. ZONE OCCUPANCY SENSOR DEVICES ON EACH SIDE OF FIREWALL TOGETHER. PROVIDE SEPARATE RELAY FOR EMERGENCY/NONEMERGENCY AND CONFIRM ALL DIMMING TYPES, PROVIDE NECESSARY COMPONENTS FOR A FULL SYSTEM.
2. EMERGENCY: ALL EMERGENCY WIRING MUST BE KEPT INDEPENDENT FROM ALL OTHER WIRING, PER NEC 700.10(B)
3. LOBBY LIGHTING TO BE ON 24/7.
4. SUSPEND LIGHTS AND EXIT SIGNS IN ALL AREAS OVER 10FT, THIS INCLUDES GARAGE, BACK OF HOUSE, 2–STORY TALL AMENITY/LOBBIES, ETC. SUSPEND OTHER UTILITIES IN BOH AND GARAGE AREAS.
5. PROVIDE AN UNSWITCHED HOT TO ALL BATTERY BALLASTS, EMERGENCY FIXTURES, AND EXIT SIGNS FROM DESIGNATED CIRCUIT.
6. EACH EXIT SIGN TO HAVE JUNCTION BOX INSTALLED NEXT TO FIXTURE TO PREVENT EXIT SIGNS FROM BEING USED AS A JUNCTION BOX FOR OTHER LIGHTS PER CEC 700.10(B).
7. NOT USED.
8. DEMAND RESPONSE CONTROLS ARE NOT REQUIRED SINCE THE BUILDING HAS LESS THAN 10,000 SF OF SPACE OVER .5 W/SF.
9. STAIRWELL T24: TO MEET CEC 130.1(C)(7)A, LIGHTING REDUCTION IN STAIRWELLS, DIM STAIRWELLS TO 50% WHEN UNOCCUPIED THROUGH INTEGRAL OCCUPANCY SENSORS.
10. GARAGE T24 TO MEET CEC 130.1(C)(7)B, LIGHTING REDUCTION IN GARAGE, DIM GARAGE FIXTURES TO 50% WHEN UNOCCUPIED THROUGH INTEGRAL OCCUPANCY SENSORS.

PYATOK
1611 TELEGRAPH AVE.
SUITE 200
OAKLAND, CA 94612
T. 510.465.7010 | F. 510.465.8575
www.pyatok.com

THE UNITY COUNCIL
1900 FRUITVALE AVE
#2A
OAKLAND, CA
94601

EMERALD CITY ENGINEERS, INC
21705 Highway 99 Lynnwood, WA 98036 425-741-1200 tel / 1201 fax

2700 INTERNATIONAL
OAKLAND, CA 94601

STAMP: REGISTERED PROFESSIONAL ENGINEER ADAM C. FRENCH E19421 EXP. 3-31-23 ELECTRICAL STATE OF CALIFORNIA 12-09-22

ISSUE SCHEDULE

100 SD	5/11/22
50 DD	7/15/22
100 DD	9/16/22
PRICING SET	11/11/22
PERMIT SET	12/09/22

REVISION SCHEDULE

NO.	ISSUE	DATE

JOB NUMBER:	2049-008
DRAWN BY:	TH
CHECKED BY:	AF
ISSUE DATE:	12/09/2022
SCALE:	
TITLE:	

BUILDING PLANS - LEVEL 3

SHEET:

E2.03

PRELIMINARY - Not for Construction -

© 2019 PYATOK ARCHITECTURE & URBAN DESIGN

COPYRIGHT 2022, EMERALD CITY ENGINEERS, INC.

4/22/2022 6:28:22 PM

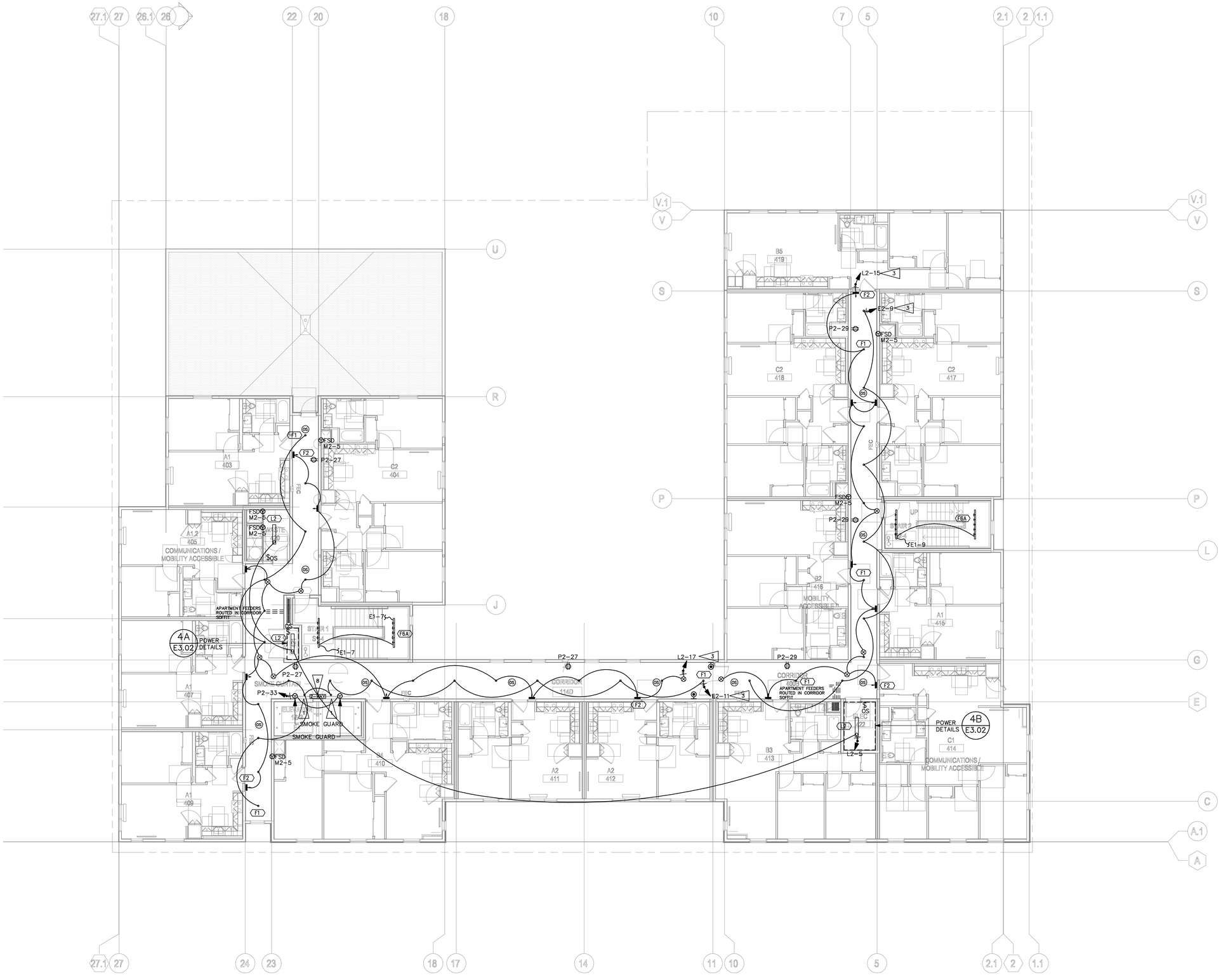

LEVEL 4

SCALE: 1/8"=1'

FLAG NOTES

1. ELEVATOR LOBBY LIGHTING TO REMAIN CONTINUOUSLY ON 24 HOURS A DAY. LIGHTING NOT TO BE CONTROLLED BY CORRIDOR OCCUPANCY SENSORS.
2. MULTI-LEVEL DIMMING NOT REQUIRED PER CEC 130.1(a). ROOM IS LESS THAN 0.5 W/SF OR LESS THAN 100 SF.
3. T24: PROVIDE MANUAL SWITCH WITH ANNUNCIATING MEANS FOR LIGHTING CIRCUITS IN STAIRS, PARKING GARAGES, PUBLIC RESTROOMS, AND CORRIDORS (SEE PLANS FOR SPECIFIC CIRCUITRY). LOCATE SWITCH WITHIN CLOSE VICINITY TO THE PANEL FEEDING THE LIGHTING CIRCUIT. SWITCHES MAY BE NOT ACCESSIBLE TO UNAUTHORIZED PERSONNEL PER CEC 130.1(a)(2) (EXCEPTION 2). PROVIDE PERMANENT LABELS ANNOTATING AREA THE SWITCH CONTROLS. SWITCHES TO BE ILLUMINATING, LEVITON 5631-2W.
4. DAYLIGHT ZONE PHOTOCELL NOT REQUIRED PER CEC EXCEPTION 1 TO SECTION 130.1(D)2. DAYLIGHT ZONE IS LESS THAN 120 WATTS.
5. UNIT PORCH LIGHTING/POWER TO BE CIRCUITED TO CORRESPONDING UNIT PANEL. REFER TO UNIT PLANS FOR SWITCH LOCATIONS.
6. PROVIDE "THERMOSTAT" STYLE PLASTIC LOCKING COVER TO PROTECT DIMMER SWITCHES.
7. CO SENSOR SYSTEM PROVIDED BY MECH. CONTRACTOR. PROVIDE CONDUIT, CONFIRM ALL ROUTING WITH MECH. CONTRACTOR PRIOR TO INSTALLATION. CONFIRM LOCATION OF HEADEND EQUIPMENT. REFER TO 3/E6.04.
8. PROVIDE A REMOTE CALL STATION FOR RESCUE ASSISTANCE 2-WAY COMMUNICATION DEVICE. REFER TO DETAIL 4/E6.04 FOR WIRING DIAGRAM.
9. CONFIRM VOLTAGE/PHASE REQUIREMENTS WITH SUBMITTAL PRIOR TO INSTALLATION.
10. RETAIL: PROVIDE THE FOLLOWING CONDUITS TO EACH RETAIL SPACE: (1) 3" CONDUIT TO MDP FOR POWER, PROVIDE (2) 1" CONDUITS FOR LOW VOLTAGE TO MPOE.
11. PRIMARY DAYLIGHT ZONE.
12. SECONDARY DAYLIGHT ZONE.

SHEET NOTES

1. CORRIDORS T24: TO MEET CEC 130.1(C)(7)A, LIGHTING REDUCTION IN CORRIDORS, DIM CORRIDORS TO 50% WHEN UNOCCUPIED. ZONE OCCUPANCY SENSOR DEVICES ON EACH SIDE OF FIREWALL TOGETHER. PROVIDE SEPARATE RELAY FOR EMERGENCY/NONEMERGENCY AND CONFIRM ALL DIMMING TYPES, PROVIDE NECESSARY COMPONENTS FOR A FULL SYSTEM.
2. EMERGENCY: ALL EMERGENCY WIRING MUST BE KEPT INDEPENDENT FROM ALL OTHER WIRING, PER NEC 700.10(B)
3. LOBBY LIGHTING TO BE ON 24/7.
4. SUSPEND LIGHTS AND EXIT SIGNS IN ALL AREAS OVER 10FT, THIS INCLUDES GARAGE, BACK OF HOUSE, 2-STORY TALL AMENITY/LOBBIES, ETC. SUSPEND OTHER UTILITIES IN BOH AND GARAGE AREAS.
5. PROVIDE AN UNSWITCHED HOT TO ALL BATTERY BALLASTS, EMERGENCY FIXTURES, AND EXIT SIGNS FROM DESIGNATED CIRCUIT.
6. EACH EXIT SIGN TO HAVE JUNCTION BOX INSTALLED NEXT TO FIXTURE TO PREVENT EXIT SIGNS FROM BEING USED AS A JUNCTION BOX FOR OTHER LIGHTS PER CEC 700.10(B).
7. NOT USED.
8. DEMAND RESPONSE CONTROLS ARE NOT REQUIRED SINCE THE BUILDING HAS LESS THAN 10,000 SF OF SPACE OVER .5 W/SF.
9. STAIRWELL T24: TO MEET CEC 130.1(C)(7)A, LIGHTING REDUCTION IN STAIRWELLS, DIM STAIRWELLS TO 50% WHEN UNOCCUPIED THROUGH INTEGRAL OCCUPANCY SENSORS.
10. GARAGE T24 TO MEET CEC 130.1(C)(7)B, LIGHTING REDUCTION IN GARAGE, DIM GARAGE FIXTURES TO 50% WHEN UNOCCUPIED THROUGH INTEGRAL OCCUPANCY SENSORS.

PYATOK
1611 TELEGRAPH AVE.
SUITE 200
OAKLAND, CA 94612
T. 510.465.7010 | F. 510.465.8575
www.pyatok.com

THE UNITY COUNCIL
1900 FRUITVALE AVE
#2A
OAKLAND, CA
94601

EMERALD CITY ENGINEERS, INC
21705 Highway 99 Lynnwood, WA
98036 425-741-1200 tel / 1201 fax

2700 INTERNATIONAL

OAKLAND, CA 94601

STAMP:

REGISTERED PROFESSIONAL ENGINEER — TRAVIS C. HAYNES — E19427 — EXP. 3-31-23 — ELECTRICAL — STATE OF CALIFORNIA — 12-09-22

ISSUE SCHEDULE

100 SD	5/11/22
50 DD	7/15/22
100 DD	9/16/22
PRICING SET	11/11/22
PERMIT SET	12/09/22

REVISION SCHEDULE

NO.	ISSUE	DATE

JOB NUMBER:	2049-008
DRAWN BY:	TH
CHECKED BY:	AF
ISSUE DATE:	12/09/2022
SCALE:	
TITLE:	BUILDING PLANS - LEVEL 4

SHEET:

E2.04

PRELIMINARY - Not for Construction -

© 2019 PYATOK ARCHITECTURE & URBAN DESIGN

4/22/2022 6:28:22 PM

COPYRIGHT 2022, EMERALD CITY ENGINEERS, INC.
THUYNH J:\2049-008 2700 INTERNATIONAL, OAKLAND, CA\DWG\E204 - BUILDING PLANS - LEVEL 4.DWG 11-29-2022 15:34

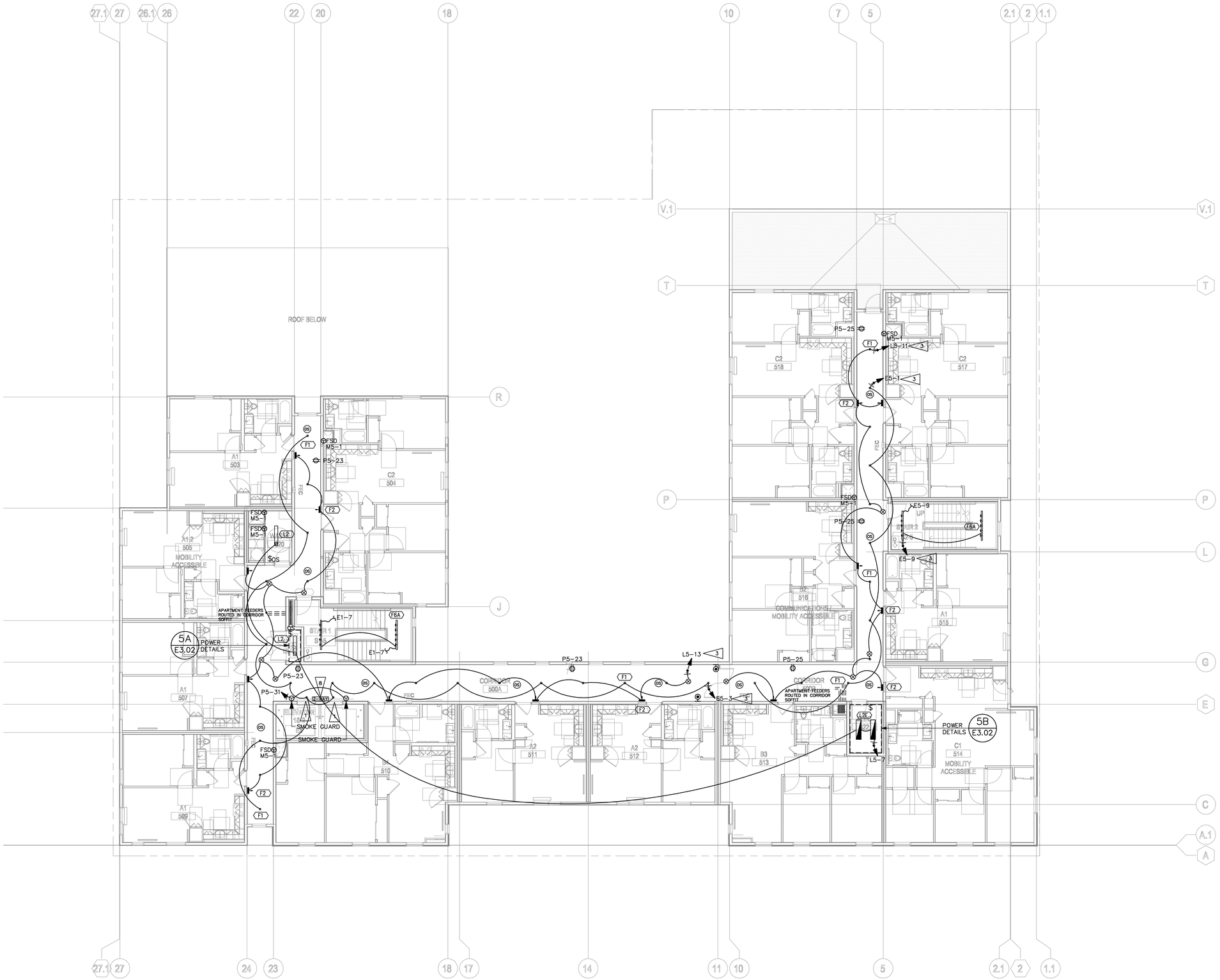

LEVEL 5

SCALE: 1/8"=1'

N

4/22/2022 6:28:22 PM

COPYRIGHT 2022, EMERALD CITY ENGINEERS, INC.
T:\2049-008 2700 INTERNATIONAL, OAKLAND, CA\DWG\E205 - BUILDING PLANS - LEVEL 5.DWG 11-29-2022 15:33

FLAG NOTES

1. ELEVATOR LOBBY LIGHTING TO REMAIN CONTINUOUSLY ON 24 HOURS A DAY. LIGHTING NOT TO BE CONTROLLED BY CORRIDOR OCCUPANCY SENSORS.
2. MULTI-LEVEL DIMMING NOT REQUIRED PER CEC 130.1(a). ROOM IS LESS THAN 0.5 W/SF OR LESS THAN 100 SF.
3. T24: PROVIDE MANUAL SWITCH WITH ANNUNCIATING MEANS FOR LIGHTING CIRCUITS IN STAIRS, PARKING GARAGES, PUBLIC RESTROOMS, AND CORRIDORS (SEE PLANS FOR SPECIFIC CIRCUITRY). LOCATE SWITCH WITHIN CLOSE VICINITY TO THE PANEL FEEDING THE LIGHTING CIRCUIT. SWITCHES MAY BE NOT ACCESSIBLE TO UNAUTHORIZED PERSONNEL PER CEC 130.1(a)(2) (EXCEPTION 2). PROVIDE PERMANENT LABELS ANNOTATING AREA THE SWITCH CONTROLS. SWITCHES TO BE ILLUMINATING, LEVITON 5631-2W.
4. DAYLIGHT ZONE PHOTOCELL NOT REQUIRED PER CEC EXCEPTION 1 TO SECTION 130.1(D)2. DAYLIGHT ZONE IS LESS THAN 120 WATTS.
5. UNIT PORCH LIGHTING/POWER TO BE CIRCUITED TO CORRESPONDING UNIT PANEL. REFER TO UNIT PLANS FOR SWITCH LOCATIONS.
6. PROVIDE "THERMOSTAT" STYLE PLASTIC LOCKING COVER TO PROTECT DIMMER SWITCHES.
7. CO SENSOR SYSTEM PROVIDED BY MECH. CONTRACTOR. PROVIDE CONDUIT, CONFIRM ALL ROUTING WITH MECH. CONTRACTOR PRIOR TO INSTALLATION. CONFIRM LOCATION OF HEADEND EQUIPMENT. REFER TO 3/E6.04.
8. PROVIDE A REMOTE CALL STATION FOR RESCUE ASSISTANCE 2-WAY COMMUNICATION DEVICE. REFER TO DETAIL 4/E6.04 FOR WIRING DIAGRAM.
9. CONFIRM VOLTAGE/PHASE REQUIREMENTS WITH SUBMITTAL PRIOR TO INSTALLATION.
10. RETAIL: PROVIDE THE FOLLOWING CONDUITS TO EACH RETAIL SPACE: (1) 3" CONDUIT TO MDP FOR POWER, PROVIDE (2) 1" CONDUITS FOR LOW VOLTAGE TO MPOE.
11. PRIMARY DAYLIGHT ZONE.
12. SECONDARY DAYLIGHT ZONE.

SHEET NOTES

1. CORRIDORS T24: TO MEET CEC 130.1(C)(7)A, LIGHTING REDUCTION IN CORRIDORS, DIM CORRIDORS TO 50% WHEN UNOCCUPIED. ZONE OCCUPANCY SENSOR DEVICES ON EACH SIDE OF FIREWALL TOGETHER. PROVIDE SEPARATE RELAY FOR EMERGENCY/NONEMERGENCY AND CONFIRM ALL DIMMING TYPES, PROVIDE NECESSARY COMPONENTS FOR A FULL SYSTEM.
2. EMERGENCY: ALL EMERGENCY WIRING MUST BE KEPT INDEPENDENT FROM ALL OTHER WIRING, PER NEC 700.10(B)
3. LOBBY LIGHTING TO BE ON 24/7.
4. SUSPEND LIGHTS AND EXIT SIGNS IN ALL AREAS OVER 10FT, THIS INCLUDES GARAGE, BACK OF HOUSE, 2-STORY TALL AMENITY/LOBBIES, ETC. SUSPEND OTHER UTILITIES IN BOH AND GARAGE AREAS.
5. PROVIDE AN UNSWITCHED HOT TO ALL BATTERY BALLASTS, EMERGENCY FIXTURES, AND EXIT SIGNS FROM DESIGNATED CIRCUIT.
6. EACH EXIT SIGN TO HAVE JUNCTION BOX INSTALLED NEXT TO FIXTURE TO PREVENT EXIT SIGNS FROM BEING USED AS A JUNCTION BOX FOR OTHER LIGHTS PER CEC 700.10(B).
7. NOT USED.
8. DEMAND RESPONSE CONTROLS ARE NOT REQUIRED SINCE THE BUILDING HAS LESS THAN 10,000 SF OF SPACE OVER .5 W/SF.
9. STAIRWELL T24: TO MEET CEC 130.1(C)(7)A, LIGHTING REDUCTION IN STAIRWELLS, DIM STAIRWELLS TO 50% WHEN UNOCCUPIED THROUGH INTEGRAL OCCUPANCY SENSORS.
10. GARAGE T24 TO MEET CEC 130.1(C)(7)B, LIGHTING REDUCTION IN GARAGE, DIM GARAGE FIXTURES TO 50% WHEN UNOCCUPIED THROUGH INTEGRAL OCCUPANCY SENSORS.

PYATOK
1611 TELEGRAPH AVE.
SUITE 200
OAKLAND, CA 94612
T. 510.465.7010 | F. 510.465.8575
www.pyatok.com

THE UNITY COUNCIL
1900 FRUITVALE AVE
#2A
OAKLAND, CA
94601

EMERALD CITY ENGINEERS, INC
21705 Highway 99 Lynnwood, WA
98036 425-741-1200 tel / 1201 fax

2700 INTERNATIONAL

OAKLAND, CA 94601

STAMP:

REGISTERED PROFESSIONAL ENGINEER
ANDREW C. FISCHER
E19421
EXP. 3-31-23
ELECTRICAL
STATE OF CALIFORNIA
12-29-22

ISSUE SCHEDULE

100 SD	5/11/22
50 DD	7/15/22
100 DD	9/16/22
PRICING SET	11/11/22
PERMIT SET	12/09/22

REVISION SCHEDULE

NO.	ISSUE	DATE

JOB NUMBER:	2049-008
DRAWN BY:	TH
CHECKED BY:	AF
ISSUE DATE:	12/09/2022
SCALE:	

TITLE:

BUILDING PLANS - LEVEL 5

SHEET:

E2.05

PRELIMINARY - Not for Construction -

© 2019 PYATOK ARCHITECTURE & URBAN DESIGN

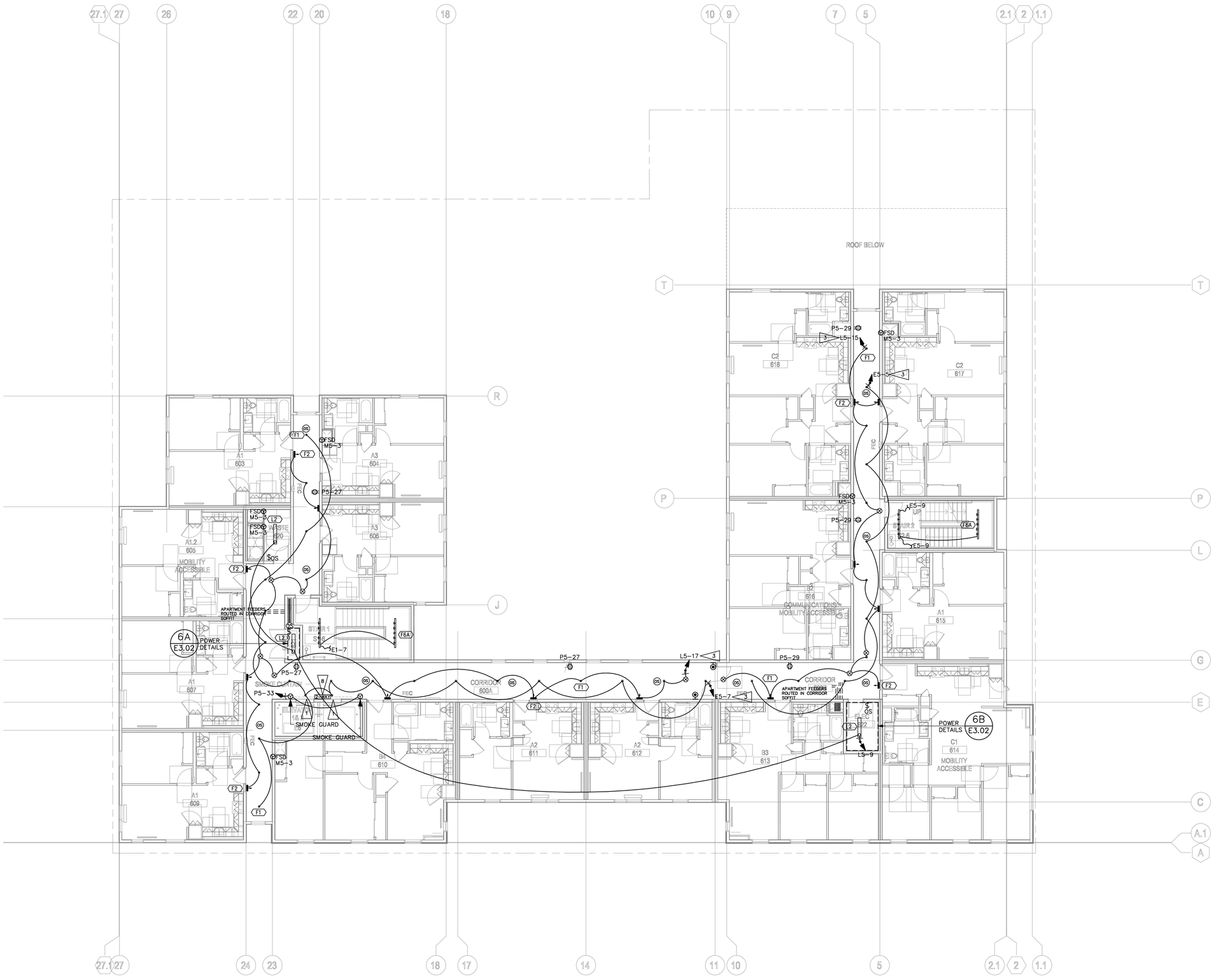

LEVEL 6

SCALE: 1/8"=1'

4/22/2022 6:28:22 PM

COPYRIGHT 2022, EMERALD CITY ENGINEERS, INC.
THUYNH J:\2049-008 2700 INTERNATIONAL, OAKLAND, CA\DWG\E206 - BUILDING PLANS - LEVEL 6.DWG 11-29-2022 15:33

FLAG NOTES

1. ELEVATOR LOBBY LIGHTING TO REMAIN CONTINUOUSLY ON 24 HOURS A DAY. LIGHTING NOT TO BE CONTROLLED BY CORRIDOR OCCUPANCY SENSORS.
2. MULTI-LEVEL DIMMING NOT REQUIRED PER CEC 130.1(a). ROOM IS LESS THAN 0.5 W/SF OR LESS THAN 100 SF.
3. T24: PROVIDE MANUAL SWITCH WITH ANNUNCIATING MEANS FOR LIGHTING CIRCUITS IN STAIRS, PARKING GARAGES, PUBLIC RESTROOMS, AND CORRIDORS (SEE PLANS FOR SPECIFIC CIRCUITRY). LOCATE SWITCH WITHIN CLOSE VICINITY TO THE PANEL FEEDING THE LIGHTING CIRCUIT. SWITCHES MAY BE NOT ACCESSIBLE TO UNAUTHORIZED PERSONNEL PER CEC 130.1(a)(2) (EXCEPTION 2). PROVIDE PERMANENT LABELS ANNOTATING AREA THE SWITCH CONTROLS. SWITCHES TO BE ILLUMINATING, LEVITON 5631-2W.
4. DAYLIGHT ZONE PHOTOCELL NOT REQUIRED PER CEC EXCEPTION 1 TO SECTION 130.1(D)2. DAYLIGHT ZONE IS LESS THAN 120 WATTS.
5. UNIT PORCH LIGHTING/POWER TO BE CIRCUITED TO CORRESPONDING UNIT PANEL. REFER TO UNIT PLANS FOR SWITCH LOCATIONS.
6. PROVIDE "THERMOSTAT" STYLE PLASTIC LOCKING COVER TO PROTECT DIMMER SWITCHES.
7. CO SENSOR SYSTEM PROVIDED BY MECH. CONTRACTOR. PROVIDE CONDUIT, CONFIRM ALL ROUTING WITH MECH. CONTRACTOR PRIOR TO INSTALLATION. CONFIRM LOCATION OF HEADEND EQUIPMENT. REFER TO 3/E6.04.
8. PROVIDE A REMOTE CALL STATION FOR RESCUE ASSISTANCE 2-WAY COMMUNICATION DEVICE. REFER TO DETAIL 4/E6.04 FOR WIRING DIAGRAM.
9. CONFIRM VOLTAGE/PHASE REQUIREMENTS WITH SUBMITTAL PRIOR TO INSTALLATION.
10. RETAIL: PROVIDE THE FOLLOWING CONDUITS TO EACH RETAIL SPACE: (1) 3" CONDUIT TO MDP FOR POWER, PROVIDE (2) 1" CONDUITS FOR LOW VOLTAGE TO MPOE.
11. PRIMARY DAYLIGHT ZONE.
12. SECONDARY DAYLIGHT ZONE.

SHEET NOTES

1. CORRIDORS T24: TO MEET CEC 130.1(C)(7)A, LIGHTING REDUCTION IN CORRIDORS, DIM CORRIDORS TO 50% WHEN UNOCCUPIED. ZONE OCCUPANCY SENSOR DEVICES ON EACH SIDE OF FIREWALL TOGETHER. PROVIDE SEPARATE RELAY FOR EMERGENCY/NONEMERGENCY AND CONFIRM ALL DIMMING TYPES, PROVIDE NECESSARY COMPONENTS FOR A FULL SYSTEM.
2. EMERGENCY: ALL EMERGENCY WIRING MUST BE KEPT INDEPENDENT FROM ALL OTHER WIRING, PER NEC 700.10(B)
3. LOBBY LIGHTING TO BE ON 24/7.
4. SUSPEND LIGHTS AND EXIT SIGNS IN ALL AREAS OVER 10FT, THIS INCLUDES GARAGE, BACK OF HOUSE, 2-STORY TALL AMENITY/LOBBIES, ETC. SUSPEND OTHER UTILITIES IN BOH AND GARAGE AREAS.
5. PROVIDE AN UNSWITCHED HOT TO ALL BATTERY BALLASTS, EMERGENCY FIXTURES, AND EXIT SIGNS FROM DESIGNATED CIRCUIT.
6. EACH EXIT SIGN TO HAVE JUNCTION BOX INSTALLED NEXT TO FIXTURE TO PREVENT EXIT SIGNS FROM BEING USED AS A JUNCTION BOX FOR OTHER LIGHTS PER CEC 700.10(B).
7. NOT USED.
8. DEMAND RESPONSE CONTROLS ARE NOT REQUIRED SINCE THE BUILDING HAS LESS THAN 10,000 SF OF SPACE OVER .5 W/SF.
9. STAIRWELL T24: TO MEET CEC 130.1(C)(7)A, LIGHTING REDUCTION IN STAIRWELLS, DIM STAIRWELLS TO 50% WHEN UNOCCUPIED THROUGH INTEGRAL OCCUPANCY SENSORS.
10. GARAGE T24 TO MEET CEC 130.1(C)(7)B, LIGHTING REDUCTION IN GARAGE, DIM GARAGE FIXTURES TO 50% WHEN UNOCCUPIED THROUGH INTEGRAL OCCUPANCY SENSORS.

PYATOK
1611 TELEGRAPH AVE.
SUITE 200
OAKLAND, CA 94612
T. 510.465.7010 | F. 510.465.8575
www.pyatok.com

THE UNITY COUNCIL
1900 FRUITVALE AVE
#2A
OAKLAND, CA
94601

EMERALD CITY ENGINEERS, INC
21705 Highway 99 Lynnwood, WA
98036 425-741-1200 tel / 1201 fax

2700 INTERNATIONAL

OAKLAND, CA 94601

STAMP:

REGISTERED PROFESSIONAL ENGINEER
ANDREW C. FREIDORF
E19427
EXP. 3-31-23
ELECTRICAL
STATE OF CALIFORNIA

12-09-22

ISSUE SCHEDULE

100 SD	5/11/22
50 DD	7/15/22
100 DD	9/16/22
PRICING SET	11/11/22
PERMIT SET	12/09/22

REVISION SCHEDULE

NO.	ISSUE	DATE

JOB NUMBER:	2049-008
DRAWN BY:	TH
CHECKED BY:	AF
ISSUE DATE:	12/09/2022
SCALE:	
TITLE:	BUILDING PLANS - LEVEL 6

SHEET:

E2.06

PRELIMINARY - Not for Construction -

© 2019 PYATOK ARCHITECTURE & URBAN DESIGN

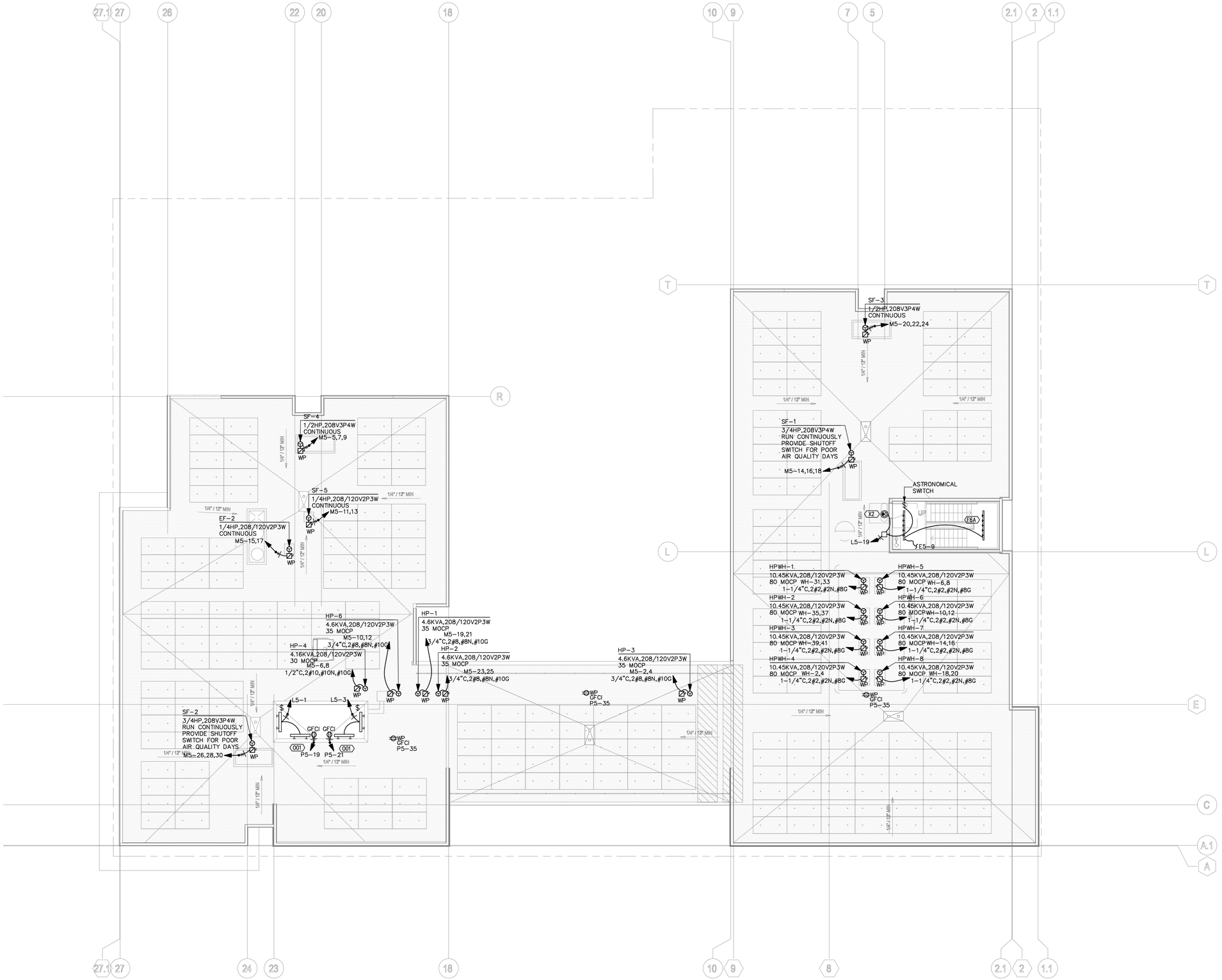

ROOF

SCALE: 1/8"=1'

FLAG NOTES

1. ELEVATOR LOBBY LIGHTING TO REMAIN CONTINUOUSLY ON 24 HOURS A DAY. LIGHTING NOT TO BE CONTROLLED BY CORRIDOR OCCUPANCY SENSORS.
2. MULTI-LEVEL DIMMING NOT REQUIRED PER CEC 130.1(a). ROOM IS LESS THAN 0.5 W/SF OR LESS THAN 100 SF.
3. T24: PROVIDE MANUAL SWITCH WITH ANNUNCIATING MEANS FOR LIGHTING CIRCUITS IN STAIRS, PARKING GARAGES, PUBLIC RESTROOMS, AND CORRIDORS (SEE PLANS FOR SPECIFIC CIRCUITRY). LOCATE SWITCH WITHIN CLOSE VICINITY TO THE PANEL FEEDING THE LIGHTING CIRCUIT. SWITCHES MAY BE NOT ACCESSIBLE TO UNAUTHORIZED PERSONNEL PER CEC 130.1(a)(2) (EXCEPTION 2). PROVIDE PERMANENT LABELS ANNOTATING AREA THE SWITCH CONTROLS. SWITCHES TO BE ILLUMINATING, LEVITON 5631-2W.
4. DAYLIGHT ZONE PHOTOCELL NOT REQUIRED PER CEC EXCEPTION 1 TO SECTION 130.1(D)2. DAYLIGHT ZONE IS LESS THAN 120 WATTS.
5. UNIT PORCH LIGHTING/POWER TO BE CIRCUITED TO CORRESPONDING UNIT PANEL. REFER TO UNIT PLANS FOR SWITCH LOCATIONS.
6. PROVIDE "THERMOSTAT" STYLE PLASTIC LOCKING COVER TO PROTECT DIMMER SWITCHES.
7. CO SENSOR SYSTEM PROVIDED BY MECH. CONTRACTOR. PROVIDE CONDUIT, CONFIRM ALL ROUTING WITH MECH. CONTRACTOR PRIOR TO INSTALLATION. CONFIRM LOCATION OF HEADEND EQUIPMENT. REFER TO 3/E6.04.
8. PROVIDE A REMOTE CALL STATION FOR RESCUE ASSISTANCE 2-WAY COMMUNICATION DEVICE. REFER TO DETAIL 4/E6.04 FOR WIRING DIAGRAM.
9. CONFIRM VOLTAGE/PHASE REQUIREMENTS WITH SUBMITTAL PRIOR TO INSTALLATION.
10. RETAIL: PROVIDE THE FOLLOWING CONDUITS TO EACH RETAIL SPACE: (1) 3" CONDUIT TO MDP FOR POWER, PROVIDE (2) 1" CONDUITS FOR LOW VOLTAGE TO MPOE.
11. PRIMARY DAYLIGHT ZONE.
12. SECONDARY DAYLIGHT ZONE.

SHEET NOTES

1. CORRIDORS T24: TO MEET CEC 130.1(C)(7)A, LIGHTING REDUCTION IN CORRIDORS, DIM CORRIDORS TO 50% WHEN UNOCCUPIED. ZONE OCCUPANCY SENSOR DEVICES ON EACH SIDE OF FIREWALL TOGETHER. PROVIDE SEPARATE RELAY FOR EMERGENCY/NONEMERGENCY AND CONFIRM ALL DIMMING TYPES, PROVIDE NECESSARY COMPONENTS FOR A FULL SYSTEM.
2. EMERGENCY: ALL EMERGENCY WIRING MUST BE KEPT INDEPENDENT FROM ALL OTHER WIRING, PER NEC 700.10(B)
3. LOBBY LIGHTING TO BE ON 24/7.
4. SUSPEND LIGHTS AND EXIT SIGNS IN ALL AREAS OVER 10FT, THIS INCLUDES GARAGE, BACK OF HOUSE, 2-STORY TALL AMENITY/LOBBIES, ETC. SUSPEND OTHER UTILITIES IN BOH AND GARAGE AREAS.
5. PROVIDE AN UNSWITCHED HOT TO ALL BATTERY BALLASTS, EMERGENCY FIXTURES, AND EXIT SIGNS FROM DESIGNATED CIRCUIT.
6. EACH EXIT SIGN TO HAVE JUNCTION BOX INSTALLED NEXT TO FIXTURE TO PREVENT EXIT SIGNS FROM BEING USED AS A JUNCTION BOX FOR OTHER LIGHTS PER CEC 700.10(B).
7. NOT USED.
8. DEMAND RESPONSE CONTROLS ARE NOT REQUIRED SINCE THE BUILDING HAS LESS THAN 10,000 SF OF SPACE OVER .5 W/SF.
9. STAIRWELL T24: TO MEET CEC 130.1(C)(7)A, LIGHTING REDUCTION IN STAIRWELLS, DIM STAIRWELLS TO 50% WHEN UNOCCUPIED THROUGH INTEGRAL OCCUPANCY SENSORS.
10. GARAGE T24 TO MEET CEC 130.1(C)(7)B, LIGHTING REDUCTION IN GARAGE, DIM GARAGE FIXTURES TO 50% WHEN UNOCCUPIED THROUGH INTEGRAL OCCUPANCY SENSORS.

PYATOK
1611 TELEGRAPH AVE.
SUITE 200
OAKLAND, CA 94612
T. 510.465.7010 | F. 510.465.8575
www.pyatok.com

THE UNITY COUNCIL
1900 FRUITVALE AVE
#2A
OAKLAND, CA
94601

EMERALD CITY ENGINEERS, INC
21705 Highway 99 Lynnwood, WA
98036 425-741-1200 tel / 1201 fax

2700 INTERNATIONAL

OAKLAND, CA 94601

STAMP:

REGISTERED PROFESSIONAL ENGINEER
TODD C. REYNOLDS
E19427
EXP. 3-31-23
ELECTRICAL
STATE OF CALIFORNIA
12-09-22

ISSUE SCHEDULE

100 SD	5/11/22
50 DD	7/15/22
100 DD	9/16/22
PRICING SET	11/11/22
PERMIT SET	12/09/22

REVISION SCHEDULE

NO.	ISSUE	DATE

JOB NUMBER:	2049-008
DRAWN BY:	TH
CHECKED BY:	AF
ISSUE DATE:	12/09/2022
SCALE:	

TITLE:

BUILDING PLANS - ROOF

SHEET:

E2.07

PRELIMINARY - Not for Construction -

© 2019 PYATOK ARCHITECTURE & URBAN DESIGN

4/22/2022 6:28:22 PM

COPYRIGHT 2022, EMERALD CITY ENGINEERS, INC.
TH/NH J:\2049-008 2700 INTERNATIONAL, OAKLAND, CA\DWG\E207 - BUILDING PLANS - ROOF.DWG 11-29-2022 15:32

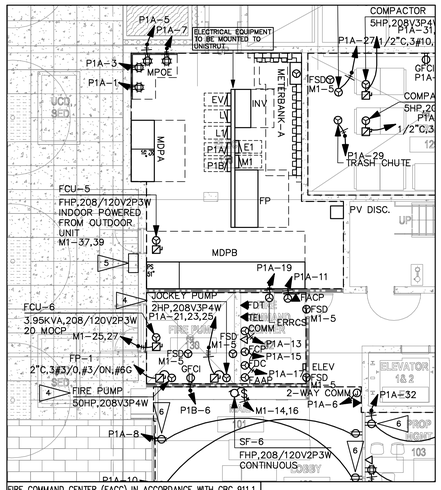

ELEC RM, FP RM, AND FCC

SCALE: 1/8" = 1'-0"

1A E2.01

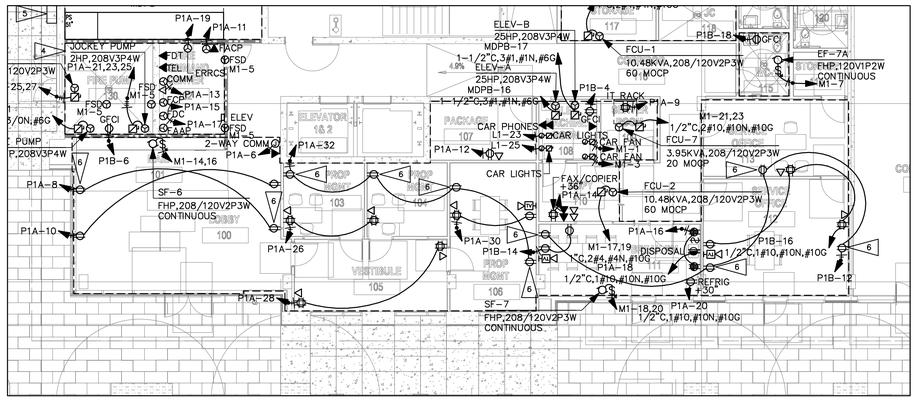

FRONT OF HOUSE

SCALE: 1/8" = 1'-0"

1B E2.01

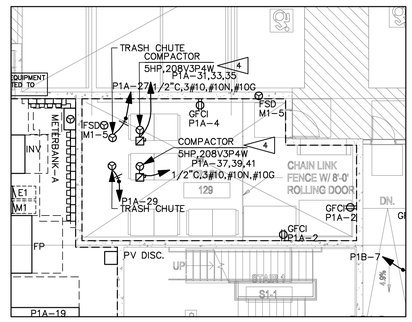

TRASH ROOM

SCALE: 1/8" = 1'-0"

1C E2.01

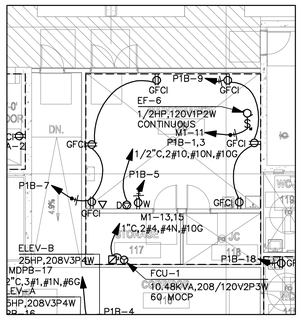

MAINTENANCE ROOM

SCALE: 1/8" = 1'-0"

1D E2.01

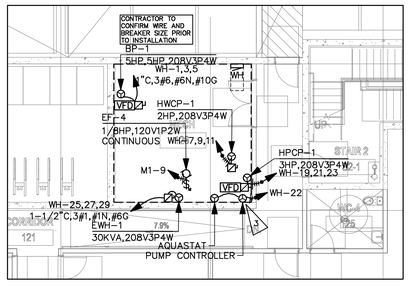

MECH ROOM

SCALE: 1/8" = 1'-0"

1E E2.01

POWER FLAG NOTES

1. CO SENSOR SYSTEM PROVIDED BY MECH. CONTRACTOR. PROVIDE CONDUIT, CONFIRM ALL ROUTING WITH MECH. CONTRACTOR PRIOR TO INSTALLATION. CONFIRM LOCATION OF HEADEND EQUIPMENT. REFER TO 3/E6.04.
2. PROVIDE A REMOTE CALL STATION FOR RESCUE ASSISTANCE 2-WAY COMMUNICATION DEVICE. REFER TO DETAIL 4/E6.04 FOR WIRING DIAGRAM.
3. HOT WATER CIRCULATION PUMPS WIRING, REFER TO DETAIL 5/E6.04 FOR AQUASTAT, PUMP LAG-LEAD CONTROLLER, AND HWCP WIRING.
4. CONFIRM VOLTAGE/PHASE REQUIREMENTS WITH SUBMITTAL PRIOR TO INSTALLATION.
5. PG&E SMART METER ANTENNA LOCATED ABOVE ELECTRICAL ROOM; ROUTE (1) 2" CONDUIT FROM MAIN ELEC ROOM. SMART METER SHALL BE LOCATED MINIMUM OF 8' ABOVE GRADE TERMINATING IN A MINIMUM 6"x6"x6" NEMA 3R RATED ENCLOSURE BOX WITH ACCESSIBLE FRONT COVER. PROVIDE CONDUIT CAP AT INTERIOR OF THE ROOM.
6. CONTROLLED RECEPTACLE: IN KITCHENS, LOBBIES, & OFFICE/CONFERENCE SPACES, AN OCCUPANCY-SENSOR-CONTROLLED OUTLET MUST BE PROVIDED WITHIN 6' OF EACH REGULAR OUTLET. PROVIDE PERMANENT LABEL STATING "CONTROLLED RECEPTACLE".

POWER SHEET NOTES

1. PROVIDE TAMPER RESISTANT RECEPTACLES THROUGHOUT PUBLIC SPACES.
2. WATER SUBMETER REPEATERS ARE TO BE LOCATED IN THE IDF CLOSETS, UTILIZING THE EXISTING POWER CIRCUITRY.
2. FLOOR MOUNTED SWITCHBOARDS LOCATED BELOW GRADE, NOT GREATER THAN 2" MAXIMUM AND SHALL BE SUPPORTED BY CONCRETE BASE, TOP POSITION OF OVER-CURRENT DEVICES TO NOT EXCEED 6'7" ABOVE WORKING SPACE FLOOR AREA.
4. NO PIPING, DUCTS, OR EQUIPMENT FOREIGN TO ELECTRICAL EQUIPMENT SHALL BE PERMITTED TO BE LOCATED WITHIN THE THE VERTICAL 6' DEDICATED SPACE ABOVE THE ELECTRICAL EQUIPMENT. IF ABOVE 6', SHEET METAL DRIP PANS MAY BE USED IF APPROVED BY THE LOCAL AHJ. PGE METERING, FOREIGN SYSTEMS TO BE MINIMUM 3' AWAY.
5. POWER TO FIRE ALARM EQUIPMENT IS SHOWN FOR BIDDING PURPOSES ONLY. COORDINATE ALL FIRE ALARM POWER REQUIREMENTS WITH DESIGN/BUILD FIRE ALARM CONTRACTOR PRIOR TO ROUGH-IN.

PYATOK
1611 TELEGRAPH AVE.
SUITE 200
OAKLAND, CA 94612
T. 510.465.7010 | F. 510.465.8575
www.pyatok.com

THE UNITY COUNCIL
1900 FRUITVALE AVE
#2A
OAKLAND, CA
94601

EMERALD CITY ENGINEERS, INC
21705 Highway 99 Lynnwood, WA
98036 425-741-1200 tel / 1201 fax

2700 INTERNATIONAL

OAKLAND, CA 94601

STAMP:

REGISTERED PROFESSIONAL ENGINEER
ANDREW C. FEE
E19427
EXP. 3-31-23
ELECTRICAL
STATE OF CALIFORNIA
12-09-22

ISSUE SCHEDULE

100 SD	5/11/22
50 DD	7/15/22
100 DD	9/16/22
PRICING SET	11/11/22
PERMIT SET	12/09/22

REVISION SCHEDULE

NO.	ISSUE	DATE

JOB NUMBER:	2049-008
DRAWN BY:	TH
CHECKED BY:	AF
ISSUE DATE:	12/09/2022
SCALE:	
TITLE:	**POWER DETAILS**

SHEET: **E3.01**

PRELIMINARY - Not for Construction -

© 2019 PYATOK ARCHITECTURE & URBAN DESIGN

4/22/2022 6:28:22 PM

COPYRIGHT 2022, EMERALD CITY ENGINEERS, INC.
THUYNH J:\2049-008 2700 INTERNATIONAL, OAKLAND, CA\DWG\E301 POWER DETAILS.DWG 11-29-2022 15:32

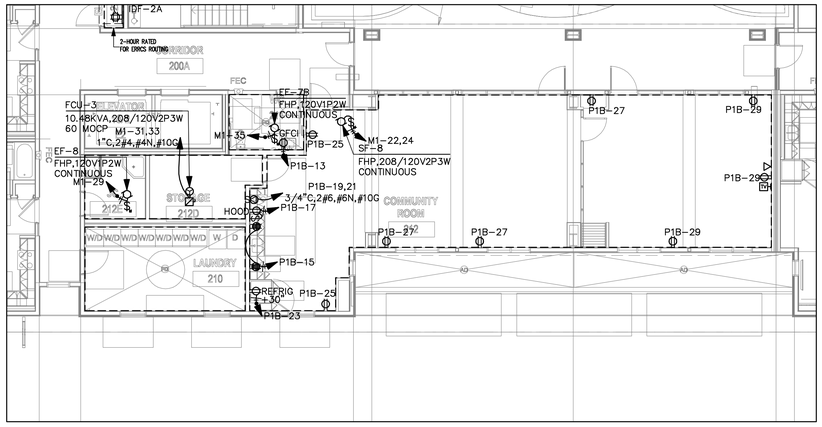

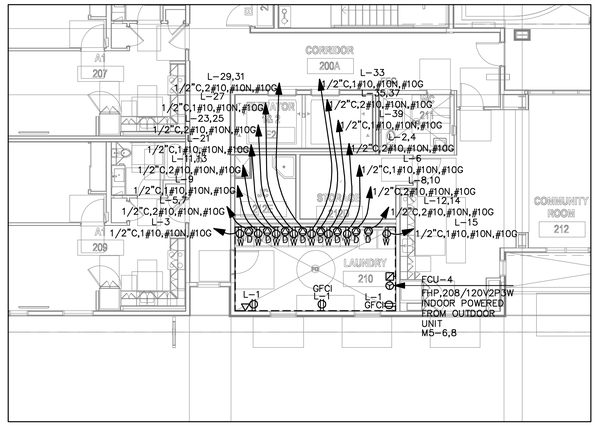

LEVEL 2 LAUNDRY / AMENITY ROOM / ELEV ROOM

2C E2.02

SCALE: 1/8" = 1'-0"

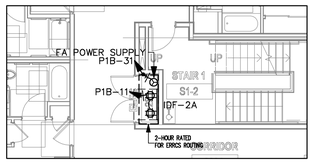

LEVEL 2 IDF CLOSET

2A E2.02

SCALE: 1/8" = 1'-0"

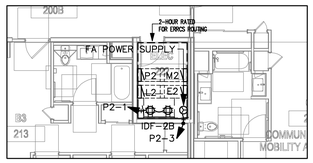

LEVEL 2 IDF CLOSET

2B E2.02

SCALE: 1/8" = 1'-0"

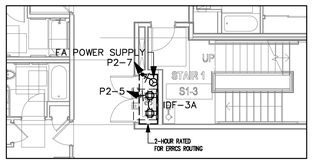

LEVEL 3 IDF CLOSET

3A E2.03

SCALE: 1/8" = 1'-0"

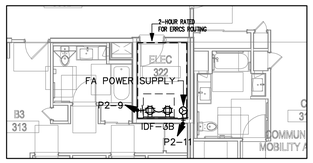

LEVEL 3 IDF CLOSET

3B E2.03

SCALE: 1/8" = 1'-0"

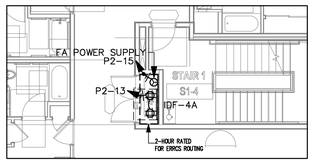

LEVEL 4 IDF CLOSET

4A E2.04

SCALE: 1/8" = 1'-0"

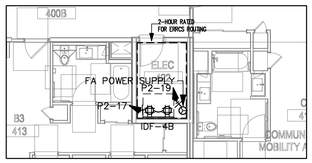

LEVEL 4 IDF CLOSET

4B E2.04

SCALE: 1/8" = 1'-0"

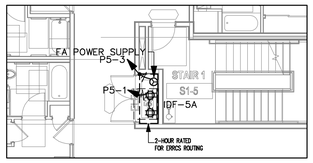

LEVEL 5 IDF CLOSET

5A E2.05

SCALE: 1/8" = 1'-0"

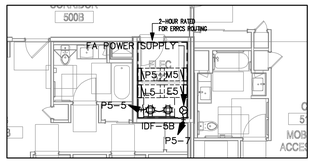

LEVEL 5 IDF CLOSET

5B E2.05

SCALE: 1/8" = 1'-0"

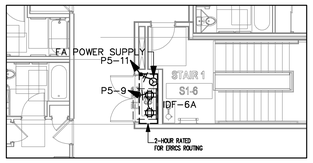

LEVEL 6 IDF CLOSET

6A E2.06

SCALE: 1/8" = 1'-0"

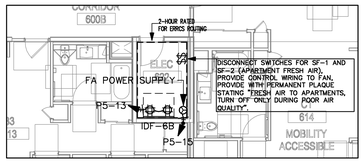

LEVEL 6 IDF CLOSET

6B E2.06

SCALE: 1/8" = 1'-0"

POWER FLAG NOTES

1. CO SENSOR SYSTEM PROVIDED BY MECH. CONTRACTOR. PROVIDE CONDUIT, CONFIRM ALL ROUTING WITH MECH. CONTRACTOR PRIOR TO INSTALLATION. CONFIRM LOCATION OF HEADEND EQUIPMENT. REFER TO 3/E6.04.
2. PROVIDE A REMOTE CALL STATION FOR RESCUE ASSISTANCE 2-WAY COMMUNICATION DEVICE. REFER TO DETAIL 4/E6.04 FOR WIRING DIAGRAM.
3. HOT WATER CIRCULATION PUMPS WIRING, REFER TO DETAIL 5/E6.04 FOR AQUASTAT, PUMP LAG-LEAD CONTROLLER, AND HWCP WIRING.
4. CONFIRM VOLTAGE/PHASE REQUIREMENTS WITH SUBMITTAL PRIOR TO INSTALLATION.
5. PG&E SMART METER ANTENNA LOCATED ABOVE ELECTRICAL ROOM; ROUTE (1) 2" CONDUIT FROM MAIN ELEC ROOM. SMART METER SHALL BE LOCATED MINIMUM OF 8' ABOVE GRADE TERMINATING IN A MINIMUM 6"x6"x6" NEMA 3R RATED ENCLOSURE BOX WITH ACCESSIBLE FRONT COVER. PROVIDE CONDUIT CAP AT INTERIOR OF THE ROOM.
6. CONTROLLED RECEPTACLE: IN KITCHENS, LOBBIES, & OFFICE/CONFERENCE SPACES, AN OCCUPANCY-SENSOR-CONTROLLED OUTLET MUST BE PROVIDED WITHIN 6' OF EACH REGULAR OUTLET. PROVIDE PERMANENT LABEL STATING "CONTROLLED RECEPTACLE".

POWER SHEET NOTES

1. PROVIDE TAMPER RESISTANT RECEPTACLES THROUGHOUT PUBLIC SPACES.
2. WATER SUBMETER REPEATERS ARE TO BE LOCATED IN THE IDF CLOSETS, UTILIZING THE EXISTING POWER CIRCUITRY.
2. FLOOR MOUNTED SWITCHBOARDS LOCATED BELOW GRADE, NOT GREATER THAN 2" MAXIMUM AND SHALL BE SUPPORTED BY CONCRETE BASE, TOP POSITION OF OVER-CURRENT DEVICES TO NOT EXCEED 6'7" ABOVE WORKING SPACE FLOOR AREA.
4. NO PIPING, DUCTS, OR EQUIPMENT FOREIGN TO ELECTRICAL EQUIPMENT SHALL BE PERMITTED TO BE LOCATED WITHIN THE THE VERTICAL 6' DEDICATED SPACE ABOVE THE ELECTRICAL EQUIPMENT. IF ABOVE 6', SHEET METAL DRIP PANS MAY BE USED IF APPROVED BY THE LOCAL AHJ. PGE METERING, FOREIGN SYSTEMS TO BE MINIMUM 3' AWAY.
5. POWER TO FIRE ALARM EQUIPMENT IS SHOWN FOR BIDDING PURPOSES ONLY. COORDINATE ALL FIRE ALARM POWER REQUIREMENTS WITH DESIGN/BUILD FIRE ALARM CONTRACTOR PRIOR TO ROUGH-IN.

PYATOK
1611 TELEGRAPH AVE.
SUITE 200
OAKLAND, CA 94612
T. 510.465.7010 | F. 510.465.8575
www.pyatok.com

THE UNITY COUNCIL
1900 FRUITVALE AVE
#2A
OAKLAND, CA 94601

EMERALD CITY ENGINEERS, INC
21705 Highway 99 Lynnwood, WA 98036 425-741-1200 tel / 1201 fax

2700 INTERNATIONAL
OAKLAND, CA 94601

STAMP:

REGISTERED PROFESSIONAL ENGINEER
ANDREW C. FRICKS
E19427
EXP. 3-31-23
ELECTRICAL
STATE OF CALIFORNIA
12-09-22

ISSUE SCHEDULE

100 SD	5/11/22
50 DD	7/15/22
100 DD	9/16/22
PRICING SET	11/11/22
PERMIT SET	12/09/22

REVISION SCHEDULE

NO.	ISSUE	DATE

JOB NUMBER:	2049-008
DRAWN BY:	TH
CHECKED BY:	AF
ISSUE DATE:	12/09/2022
SCALE:	
TITLE:	**POWER DETAILS**

SHEET: **E3.02**

PRELIMINARY - Not for Construction -

© 2019 PYATOK ARCHITECTURE & URBAN DESIGN

4/22/2022 6:28:22 PM

COPYRIGHT 2022, EMERALD CITY ENGINEERS, INC.
THUYNH J:\2049-008 2700 INTERNATIONAL, OAKLAND, CA\DWG\E302 POWER DETAILS.DWG 11-29-2022 15:31

UNIT TYPE A1
SCALE: 1/4" = 1'-0"

UNIT TYPE A1.2 – MOBILITY
SCALE: 1/4" = 1'-0"

UNIT TYPE A2
SCALE: 1/4" = 1'-0"

UNIT TYPE A3
SCALE: 1/4" = 1'-0"

DOORBELL SCHEDULE:

DOORBELL 120V POWER TO BE FROM NEAREST GENERAL PURPOSE LIGHTING/RECEPTACLE CIRCUIT. DOORBELL SYSTEM TO BE CAPABLE OF ADDING A VISUAL STROBE.

- DOORBELL PUSH-BUTTON: MODEL: NUTONE #PB41LSN CONFIRM FINISH WITH ARCH. MOUNTING: +48" TO TOP
- DOORBELL TRANSFORMER: MODEL: NUTONE #C905 MOUNTING: LOCATED IN CLOSET
- DOORBELL CHIME: MODEL: NUTONE #LA11WH MOUNTING: +80" TO BOTTOM

ACCESSIBLE COMMUNICATION UNITS (REF ARCH FOR LOCATION): PROVIDE VISUAL AND AUDIBLE ALARMS
- CHIME & STROBE: EDWARDS 6536-G5
- TRANSFORMER: EDWARDS 592
- PUSHBUTTON: EDWARDS 620/147-10
- (147-10 NAMEPLATE: "HOLD BUTTON FOR 5 SECONDS")

BRANCH CIRCUIT VOLTAGE DROP TABLE:
2% MAXIMUM ALLOWABLE DROP

APARTMENT BRANCH CIRCUIT VOLTAGE DROP CALCULATIONS

Vd = VOLTAGE DROP
K = RESISTANCE IN OHMS OF ONE CIRCULAR MIL FOOT OF CONDUCTOR [K = 12.9 FOR COPPER CONDUCTORS, K = 21.2 FOR ALUMINUM CONDUCTORS]
L = ONE-WAY LENGTH OF CIRCUIT (FOR SINGLE PHASE FEEDERS)
I = CURRENT $Vd = \frac{2K \times L \times I}{Cm}$
Cm = CROSS SECTION AREA OF CONDUCTOR

	FEEDER LENGTH (ft)	CALCULATED LOAD (kVA)	VOLTAGE (Volts)	CURRENT (Amps)	WIRE SIZE (CU)	Cm (cmil)	VOLTAGE DROP (Volts)	% VOLT DROP
STOVE	68	8.1	208	38.9	#8 CU	16510	4.1	1.99%
KITCHEN APPL	48	1.5	120	12.5	#12 CU	6530	2.4	1.98%
MICRO/HOOD	48	1.5	120	12.5	#12 CU	6531	2.4	1.98%
DW	60	1.2	120	10.0	#12 CU	6530	2.4	1.98%
DISP	60	1.2	120	10.0	#12 CU	6530	2.4	1.98%
BED/LIVING	60	1.2	120	10.0	#12 CU	6530	2.4	1.98%
DRYER	68	5	208	24.0	#10 CU	10380	4.1	1.95%
WASHER	48	1.5	120	12.5	#12 CU	6530	2.4	1.98%

DISTANCES SHOWN HERE ARE FOR FEEDER VOLTAGE DROP CALCULATIONS ONLY AND SHOULD NOT BE USED TO DETERMINE THE AMOUNT OF MATERIAL NEEDED FOR CONSTRUCTION.

DEVICE KEY & WIRING LEGEND:

SYMBOL:	DEVICE NAME & INFO:	WIRE SIZE:	CIRCUITING NOTES:
S		2#8,#8N,#10G	DEDICATED CIRCUIT
M/H	MICROWAVE HOOD, +76"	1#12,#12N,#12G	DEDICATED CIRCUIT, AFCI/GFCI
DW	DISHWASHER, +20"	1#12,#12N,#12G	DEDICATED CIRCUIT, AFCI/GFCI
$ DISP	DISPOSAL, +20"	1#12,#12N,#12G	DEDICATED CIRCUIT, AFCI/GFCI
R	REFRIGERATOR, +30"	–	GROUP W/ SMALL APPLIANCE CKTS
D	CLOTHES DRYER, +30"	2#10,#10N,#10G	DEDICATED CIRCUIT (MANAGERS ONLY)
W	CLOTHES WASHER, +30"	1#12,#12N,#12G	DEDICATED CIRCUIT, AFCI/GFCI (MANAGERS ONLY)
$ HPAC	EPHOCA PTAC (20A VERSION)	20A: 2#12,#12G	HARD WIRED WITH SHUTOFF SWITCH (REQUIRED BY CODE), CONFIRM LOCATION OF SWITCH WITH OWNER
0.75KW FH	ELECTRIC RESISTANCE FAN HEATER, 0.75KW	2#12,#12G	WITH LINE VOLTAGE PROGRAMMABLE TSTAT. LOCKABLE CIRCUIT BREAKER.
	BATH CKT:	1#12,#12N,#12G	CIRCUIT TO SERVE BATHROOM LIGHTING, FAN, & RECEPTACLE LOADS ONLY.
	BED CKT:	1#14,#14N,#14G 15A (AFCI)	CIRCUIT BEDROOM LIGHTING, RECEPTACLES, SMART BOX RECEPTACLE.
	LIVING CKT:	1#14,#14N,#14G 15A (AFCI)	CIRCUIT BEDROOM LIGHTING, RECEPTACLES, 120V SMOKE DETECTORS.
	KITCHEN CKT #1:	1#12,#12N,#12G (AFCI/GFCI)	CIRCUIT #1 SERVING THE KITCHEN COUNTER RECEPTACLES (INCLUDING REFRIGERATOR)
	KITCHEN CKT #2 (WITH DINING):	1#12,#12N,#12G (AFCI/GFCI)	KITCHEN CIRCUIT #2 SERVING THE KITCHEN COUNTER RECEPTACLES AND DINING RECEPTACLES.

ALL BRANCH CIRCUITS ARE COPPER.
TYPE III OR V BUILDINGS: ROMEX
TYPE I OR II BUILDINGS: MC CABLE

REFER TO DWELLING UNIT PANEL SCHEDULE(S) ON SHEET E5.04

FLAG NOTES:

1. PROVIDE RECESSED SMART BOX WITH INTEGRAL DUPLEX RECEPTACLE. PROVIDE HOMERUNS TO NEAREST COMMUNICATIONS CLOSET. SEE E6.02 FOR DETAILS.
2. PATIO LIGHT SWITCH TO BE ASTRONOMICAL TIMER BUILT INTO A SINGLE GANG JBOX (2016 T24 REQUIREMENT): LEVITON VPT24-1PZ. PROGRAM TO TURN ON/OFF AT SUNSET/SUNRISE.
3. RECEPTACLE LOCATED IN FACE OF UPPER CABINET TO ACHIEVE CODE REACH RANGE COMPLIANCE. ROUTE MC CABLE THROUGH CABINETRY.
4. COORDINATE WITH GC RECEPTACLE MOUNTING TO END OF WING WALL. MOUNT WITHIN 12" OF COUNTERTOP SURFACE PER CEC 210.52(C)(5).
5. HALF-HOT SWITCHED DUPLEX OUTLET. MOUNT UPSIDE DOWN TO VISUALLY DIFFERENTIATE RECEPTACLE.
6. DINING ROOM RECEPTACLE CIRCUITED TO 'SMALL APPLIANCE KITCHEN BRANCH CIRCUIT' WITH AFCI PROTECTION, REFER TO PANEL SCHEDULE. GFCI PROVIDED BY CIRCUIT BREAKER.
7. IN ACCESSIBLE UNITS, PROVIDE SWITCHES FOR HOOD (FAN AND LIGHT SEPARATELY), LOCATE AT 44" TO TOP.
8. EF-1: BATHROOM EXHAUST FAN IS PART OF THE BALANCED VENTILATION SYSTEM, PROVIDE SHUTOFF SWITCH THAT KILLS POWER TO THE EXHAUST FAN. PROVIDE PERMANENT PLAQUE PER NOTE B1 BELOW.
9. REFER TO DETAIL 1 ON SHEET E5.04.

SHEET NOTES:

GENERAL
1. ALL DWELLING UNIT RECEPTACLES TO BE TAMPER RESISTANT PER CEC 406.11.
2. REFER TO ARCHITECTURAL UNIT PLANS FOR DIMENSIONS OF CEILING LIGHTING FIXTURES.
3. GANG OUTLET DEVICES WHERE POSSIBLE.
4. SMOKE & COMBO SMOKE/CO DETECTORS IN UNITS, PHOTOELECTRIC TYPE, NOT IONIZING, 120V WITH BATTERY BACKUP, INTERCONNECTED WITHIN UNIT FOR COMMON ALARM, PER CODE. LOCATE MINIMUM 10FT AWAY FROM STOVES, 3FT AWAY FROM BATHROOM DOORS (WHERE POSSIBLE), 36" AWAY FROM PADDLE FANS AND TRANSFER FANS, 36" HORIZONTAL PATH FROM SUPPLY DIFFUSER.
5. WATER PROOF GFCI RECEPTACLES ARE REQUIRED AT ALL BALCONIES & GROUND/PODIUM PORCHES.
6. ALL UNITS: FIRE ALARM SYSTEM SHALL BE CAPABLE OF SUPPORTING VISUAL STROBE FIRE ALARM, REFER TO E00 DESIGN/BUILD FIRE ALARM NOTES.
7. MINI FIRE ALARM HORN PART OF BUILDING FIRE ALARM SYSTEM WITH LOW FREQUENCY SOUNDER BASES.
8. FAN HEATERS: IF INSTALLED IN RATED WALLS MUST BE WRAPPED WITH SHEET ROCK TO MAINTAIN RATING OF THE WALL. CONFIRM KW RATING WITH MECH CONTRACTOR
9. FAN HEATER THERMOSTATS: TSTATS FOR ELECTRIC FAN HEATERS ARE LINE VOLTAGE (PROVIDED BY EC), AND BE DIGITAL 7-DAY PROGRAMMABLE MEETING T24.
10. LOOPS OR SWITCHGROUPS INDICATE LIGHT FIXTURES (&/OR RECEPTACLES) CONTROLLED BY SWITCH.
11. NOT USED.
12. NOT USED.
13. PANCAKE BOXES SHOULD BE PROVIDED IN LOCATIONS WHERE STRUCTURAL HOLD DOWNS PREVENT RECEPTACLE/SWITCH PLACEMENTS AS PRESCRIBED PER CODE.
14. PROVIDE GFCI RECEPTACLES WITHIN 6-FT OF ALL SINKS, INCLUDING THE KITCHEN SINK.
15. AFCI PROTECTION: REQUIRES THE MAXIMUM LENGTH OF BRANCH CIRCUIT WIRING FROM THE OVERCURRENT DEVICE TO THE FIRST OUTLET SHALL NOT EXCEED 50-FT FOR #14 AWG OR 70-FT FOR #12 AWG. THE FIRST OUTLET BOX IN THE BRANCH CIRCUIT SHALL BE MARKED TO INDICATE THAT IT IS THE FIRST OUTLET OF THE CIRCUIT "AFCI FIRST OUTLET".
16. LOAD CENTERS TO BE MOUNTED 48" AFF TO TOP OF TOP CIRCUIT BREAKER.
17. T24 2019: ALL RECESSED LIGHTS AND FAN/LIGHT COMBOS TO BE SEALED WITH A GASKET OR CAULK BETWEEN THE LUMINAIRE HOUSING AND CEILING, AND SHALL HAVE ALL AIR LEAK PATHS BETWEEN CONDITIONED AND UNCONDITIONED SPACES SEALED WITH A GASKET OR CAULK.
18. RECEPTACLE OUTLETS ARE NOT TO BE INSTALLED BACK TO BACK.

KITCHEN
- K1. KITCHEN RECEPTACLES & SWITCHES MOUNTED A MAXIMUM HEIGHT OF +44" AFF TO THE TOP OF DEVICE. REFER TO ARCHITECTURAL ELEVATIONS FOR EXACT HEIGHT AND MOUNTING.
- K2. ON RAISED KITCHEN BARTOP, MOUNT HORIZONTALLY AT +43" AFF TO TOP OF BOX.
- K3. L-SHAPED KITCHENS: ONE OUTLET MUST BE LOCATED A MINIMUM 36" FROM THE OUTSIDE OF THE CORNER FOR ACCESSIBILITY.
- K4. PROVIDE GFCI/AFCI COMBINATION CIRCUIT BREAKERS FOR ALL RECEPTACLES LOCATED WITHIN 6-FT OF A KITCHEN SINK, THIS APPLIES TO KITCHEN APPLIANCE RECEPTACLES.

BATHROOM
- B1. RESTROOM EXHAUST FAN – EF-1: PROVIDE INTEGRATED MULTI-SPEED MODEL WITH CONDENSATION SENSOR PANASONIC FV-CSVK1 AND MOTION SENSOR PANASONIC FV-MSVK1. PROVIDE PERMANENT PLAQUE THAT READS "THIS SWITCH CONTROLS THE INDOOR AIR QUALITY VENTILATION FOR THE APARTMENT UNIT, LEAVE IT ON UNLESS THE OUTDOOR AIR QUALITY IS VERY POOR".
- B2. BATHROOM: RECEPTACLE AND SWITCH TO BE 46" AFF TO TOP OF THE BOX.
- B3. BATHROOM SWITCHING: FIRST SWITCH (DIMMER) IS TO CONTROL THE VANITY. SECOND SWITCH (VACANCY) IS TO CONTROL THE DOWNLIGHT.

PYATOK
1611 TELEGRAPH AVE.
SUITE 200
OAKLAND, CA 94612
T. 510.465.7010 | F. 510.465.8575
www.pyatok.com

THE UNITY COUNCIL
1900 FRUITVALE AVE
#2A
OAKLAND, CA
94601

EMERALD CITY ENGINEERS, INC
21705 Highway 99 Lynnwood, WA
98036 425-741-1200 tel / 1201 fax

2700 INTERNATIONAL
OAKLAND, CA 94601

STAMP: REGISTERED PROFESSIONAL ENGINEER ADAM C. FRENCH E1942 EXP. 3-31-23 ELECTRICAL STATE OF CALIFORNIA 12-09-22

ISSUE SCHEDULE

100 SD	5/11/22
50 DD	7/15/22
100 DD	9/16/22
PRICING SET	11/11/22
PERMIT SET	12/09/22

REVISION SCHEDULE

NO.	ISSUE	DATE

JOB NUMBER: 2049-008
DRAWN BY: TH
CHECKED BY: AF
ISSUE DATE: 12/09/2022
SCALE:
TITLE:
UNIT PLANS

SHEET:
E4.01

PRELIMINARY - Not for Construction -

© 2019 PYATOK ARCHITECTURE & URBAN DESIGN

4/22/2022 6:28:22 PM

COPYRIGHT 2022, EMERALD CITY ENGINEERS, INC.
THUYNH J:\2049-008 2700 INTERNATIONAL, OAKLAND, CA\DWG\E401 - UNIT PLANS.DWG 11-29-2022 15:31

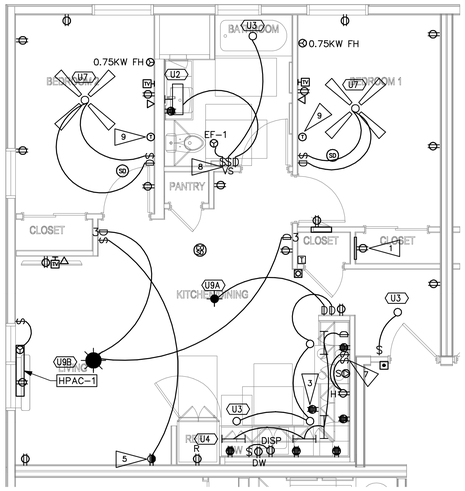

UNIT TYPE B1 – MOBILITY

SCALE: 1/4" = 1'-0"

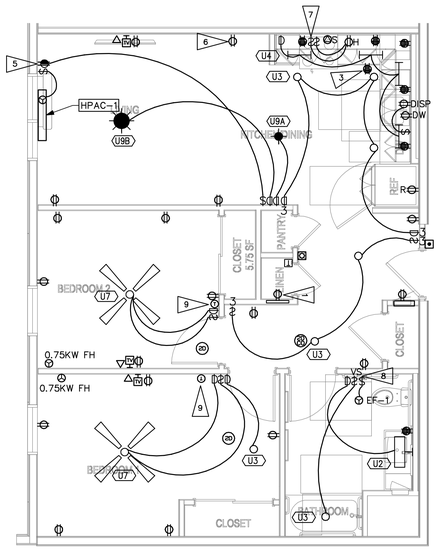

UNIT TYPE B2 – MOBILITY

SCALE: 1/4" = 1'-0"

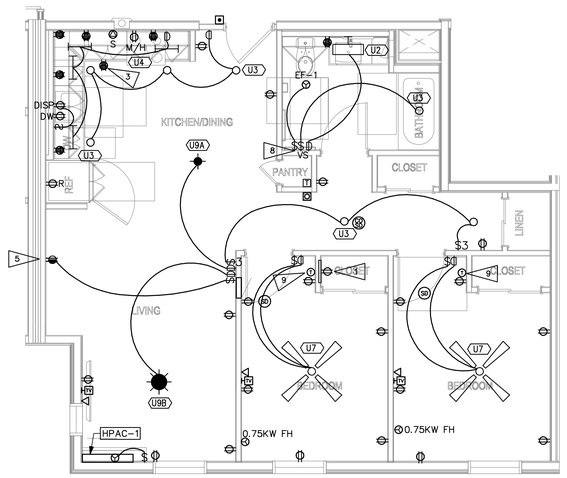

UNIT TYPE B3

SCALE: 1/4" = 1'-0"

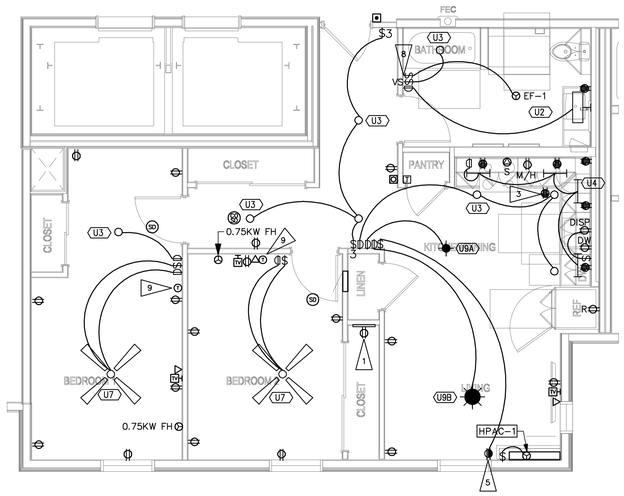

UNIT TYPE B4

SCALE: 1/4" = 1'-0"

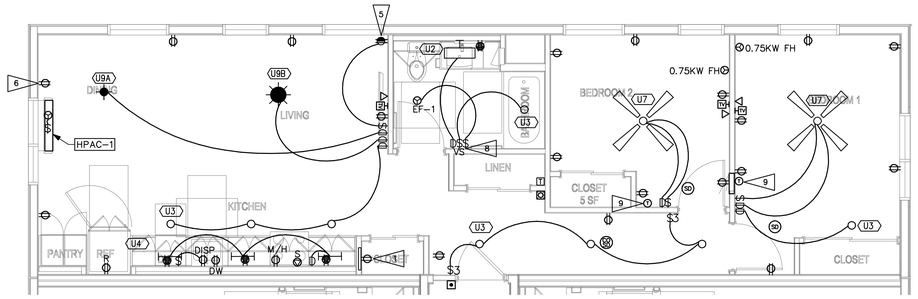

UNIT TYPE B5

SCALE: 1/4" = 1'-0"

DOORBELL SCHEDULE:

DOORBELL 120V POWER TO BE FROM NEAREST GENERAL PURPOSE LIGHTING/RECEPTACLE CIRCUIT. DOORBELL SYSTEM TO BE CAPABLE OF ADDING A VISUAL STROBE.

- ⊡ DOORBELL PUSH-BUTTON: MODEL: NUTONE #PB41LSN CONFIRM FINISH WITH ARCH. MOUNTING: +48" TO TOP
- T DOORBELL TRANSFORMER: MODEL: NUTONE #C905 MOUNTING: LOCATED IN CLOSET
- ⊠ DOORBELL CHIME: MODEL: NUTONE #LA11WH MOUNTING: +80" TO BOTTOM

ACCESSIBLE COMMUNICATION UNITS (REF ARCH FOR LOCATION): PROVIDE VISUAL AND AUDIBLE ALARMS

- CHIME & STROBE: EDWARDS 6536-G5
- TRANSFORMER: EDWARDS 592
- PUSHBUTTON: EDWARDS 620/147-10 (147-10 NAMEPLATE: "HOLD BUTTON FOR 5 SECONDS")

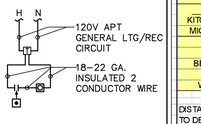

BRANCH CIRCUIT VOLTAGE DROP TABLE:

2% MAXIMUM ALLOWABLE DROP

APARTMENT BRANCH CIRCUIT VOLTAGE DROP CALCULATIONS

Vd = VOLTAGE DROP
K = RESISTANCE IN OHMS OF ONE CIRCULAR MIL FOOT OF CONDUCTOR
(K = 12.9 FOR COPPER CONDUCTORS, K = 21.2 FOR ALUMINUM CONDUCTORS)
L = ONE-WAY LENGTH OF CIRCUIT (FOR SINGLE PHASE FEEDERS)
I = CURRENT
Vd = 2K x L x I / Cm
Cm = CROSS SECTION AREA OF CONDUCTOR

	FEEDER LENGTH (ft)	CALCULATED LOAD (kVA)	VOLTAGE (Volts)	CURRENT (Amps)	WIRE SIZE (CU)	Cm (cmil)	VOLTAGE DROP (Volts)		% VOLT DROP
STOVE	68	8.1	208	38.9	#6 CU	16510	4.1		1.99%
KITCHEN APPL	48	1.5	120	12.5	#12 CU	6530	2.4		1.98%
MICRO/HOOD	48	1.5	120	12.5	#12 CU	6531	2.4		1.98%
DW	60	1.2	120	10.0	#12 CU	6530	2.4		1.98%
DISP	60	1.2	120	10.0	#12 CU	6530	2.4		1.98%
BED/LIVING	60	1.2	120	10.0	#12 CU	6530	2.4		1.98%
DRYER	68	5	208	24.0	#10 CU	10380	4.1		1.95%
WASHER	48	1.5	120	12.5	#12 CU	6530	2.4		1.98%

DISTANCES SHOWN HERE ARE FOR FEEDER VOLTAGE DROP CALCULATIONS ONLY AND SHOULD NOT BE USED TO DETERMINE THE AMOUNT OF MATERIAL NEEDED FOR CONSTRUCTION.

DEVICE KEY & WIRING LEGEND:

SYMBOL:	DEVICE NAME & INFO:	WIRE SIZE:	CIRCUITING NOTES:
Φ_S		2#8,#8N,#10G	DEDICATED CIRCUIT
$\Phi_{M/H}$	MICROWAVE HOOD, +76"	1#12,#12N,#12G	DEDICATED CIRCUIT, AFCI/GFCI
Φ_{DW}	DISHWASHER, +20"	1#12,#12N,#12G	DEDICATED CIRCUIT, AFCI/GFCI
$\$\Phi_{DISP}$	DISPOSAL, +20"	1#12,#12N,#12G	DEDICATED CIRCUIT, AFCI/GFCI
Φ_R	REFRIGERATOR, +30"	–	GROUP W/ SMALL APPLIANCE CKTS
Φ_D	CLOTHES DRYER, +30"	2#10,#10N,#10G	DEDICATED CIRCUIT (MANAGERS ONLY)
Φ_W	CLOTHES WASHER, +30"	1#12,#12N,#12G	DEDICATED CIRCUIT, AFCI/GFCI (MANAGERS ONLY)
$\$\Phi$HPAC	EPHOCA PTAC (20A VERSION)	20A: 2#12,#12G	HARD WIRED WITH SHUTOFF SWITCH (REQUIRED BY CODE), CONFIRM LOCATION OF SWITCH WITH OWNER
0.75KW FH	ELECTRIC RESISTANCE FAN HEATER, 0.75KW	2#12,#12G	WITH LINE VOLTAGE PROGRAMMABLE TSTAT. LOCKABLE CIRCUIT BREAKER.
	BATH CKT:	1#12,#12N,#12G	CIRCUIT TO SERVE BATHROOM LIGHTING, FAN, & RECEPTACLE LOADS ONLY.
	BED CKT:	1#14,#14N,#14G 15A (AFCI)	CIRCUIT BEDROOM LIGHTING, RECEPTACLES, SMART BOX RECEPTACLE.
	LIVING CKT:	1#14,#14N,#14G 15A (AFCI)	CIRCUIT BEDROOM LIGHTING, RECEPTACLES, 120V SMOKE DETECTORS.
	KITCHEN CKT #1:	1#12,#12N,#12G (AFCI/GFCI)	CIRCUIT #1 SERVING THE KITCHEN COUNTER RECEPTACLES (INCLUDING REFRIGERATOR)
	KITCHEN CKT #2 (WITH DINING):	1#12,#12N,#12G (AFCI/GFCI)	KITCHEN CIRCUIT #2 SERVING THE KITCHEN COUNTER RECEPTACLES AND DINING RECEPTACLES.

ALL BRANCH CIRCUITS ARE COPPER.
TYPE III OR V BUILDINGS: ROMEX
TYPE I OR II BUILDINGS: MC CABLE

REFER TO DWELLING UNIT PANEL SCHEDULE(S) ON SHEET E5.04

FLAG NOTES:

1. PROVIDE RECESSED SMART BOX WITH INTEGRAL DUPLEX RECEPTACLE. PROVIDE HOMERUNS TO NEAREST COMMUNICATIONS CLOSET. SEE E6.02 FOR DETAILS.
2. PATIO LIGHT SWITCH TO BE ASTRONOMICAL TIMER BUILT INTO A SINGLE GANG JBOX (2016 T24 REQUIREMENT): LEVITON VPT24-1PZ. PROGRAM TO TURN ON/OFF AT SUNSET/SUNRISE.
3. RECEPTACLE LOCATED IN FACE OF UPPER CABINET TO ACHIEVE CODE REACH RANGE COMPLIANCE. ROUTE MC CABLE THROUGH CABINETRY.
4. COORDINATE WITH GC RECEPTACLE MOUNTING TO END OF WING WALL. MOUNT WITHIN 12" OF COUNTERTOP SURFACE PER CEC 210.52(C)(5).
5. HALF-HOT SWITCHED DUPLEX OUTLET. MOUNT UPSIDE DOWN TO VISUALLY DIFFERENTIATE RECEPTACLE.
6. DINING ROOM RECEPTACLE CIRCUITED TO 'SMALL APPLIANCE KITCHEN BRANCH CIRCUIT' WITH AFCI PROTECTION. REFER TO PANEL SCHEDULE. GFCI PROVIDED BY CIRCUIT BREAKER.
7. IN ACCESSIBLE UNITS, PROVIDE SWITCHES FOR HOOD (FAN AND LIGHT SEPARATELY), LOCATE AT 44" TO TOP.
8. EF-1: BATHROOM EXHAUST FAN IS PART OF THE BALANCED VENTILATION SYSTEM, PROVIDE SHUTOFF SWITCH THAT KILLS POWER TO THE EXHAUST FAN. PROVIDE PERMANENT PLAQUE PER NOTE B1 BELOW.
9. REFER TO DETAIL 1 ON SHEET E5.04.

SHEET NOTES:

GENERAL

1. ALL DWELLING UNIT RECEPTACLES TO BE TAMPER RESISTANT PER CEC 406.11.
2. REFER TO ARCHITECTURAL UNIT PLANS FOR DIMENSIONS OF CEILING LIGHTING FIXTURES.
3. GANG OUTLET DEVICES WHERE POSSIBLE.
4. SMOKE & COMBO SMOKE/CO DETECTORS IN UNITS, PHOTOELECTRIC TYPE, NOT IONIZING, 120V WITH BATTERY BACKUP, INTERCONNECTED WITHIN UNIT FOR COMMON ALARM, PER CODE. LOCATE MINIMUM 10FT AWAY FROM STOVES, 3FT AWAY FROM BATHROOM DOORS (WHERE POSSIBLE), 36" AWAY FROM PADDLE FANS AND TRANSFER FANS, 36" HORIZONTAL PATH FROM SUPPLY DIFFUSER.
5. WATER PROOF GFCI RECEPTACLES ARE REQUIRED AT ALL BALCONIES & GROUND/PODIUM PORCHES.
6. ALL UNITS: FIRE ALARM SYSTEM SHALL BE CAPABLE OF SUPPORTING VISUAL STROBE FIRE ALARM, REFER TO E00 DESIGN/BUILD FIRE ALARM NOTES.
7. MINI FIRE ALARM HORN PART OF BUILDING FIRE ALARM SYSTEM WITH LOW FREQUENCY SOUNDER BASES.
8. FAN HEATERS: IF INSTALLED IN RATED WALLS MUST BE WRAPPED WITH SHEET ROCK TO MAINTAIN RATING OF THE WALL. CONFIRM KW RATING WITH MECH CONTRACTOR
9. FAN HEATER THERMOSTATS: TSTATS FOR ELECTRIC FAN HEATERS ARE LINE VOLTAGE (PROVIDED BY EC), AND BE DIGITAL 7-DAY PROGRAMMABLE MEETING T24.
10. LOOPS OR SWITCHGROUPS INDICATE LIGHT FIXTURES (&/OR RECEPTACLES) CONTROLLED BY SWITCH.
11. NOT USED.
12. NOT USED.
13. PANCAKE BOXES SHOULD BE PROVIDED IN LOCATIONS WHERE STRUCTURAL HOLD DOWNS PREVENT RECEPTACLE/SWITCH PLACEMENTS AS PRESCRIBED PER CODE.
14. PROVIDE GFCI RECEPTACLES WITHIN 6-FT OF ALL SINKS, INCLUDING THE KITCHEN SINK.
15. AFCI PROTECTION: REQUIRES THE MAXIMUM LENGTH OF BRANCH CIRCUIT WIRING FROM THE OVERCURRENT DEVICE TO THE FIRST OUTLET SHALL NOT EXCEED 50-FT FOR #14 AWG OR 70-FT FOR #12 AWG. THE FIRST OUTLET BOX IN THE BRANCH CIRCUIT SHALL BE MARKED TO INDICATE THAT IT IS THE FIRST OUTLET OF THE CIRCUIT "AFCI FIRST OUTLET".
16. LOAD CENTERS TO BE MOUNTED 48" AFF TO TOP OF TOP CIRCUIT BREAKER.
17. T24 2019: ALL RECESSED LIGHTS AND FAN/LIGHT COMBOS TO BE SEALED WITH A GASKET OR CAULK BETWEEN THE LUMINAIRE HOUSING AND CEILING, AND SHALL HAVE ALL AIR LEAK PATHS BETWEEN CONDITIONED AND UNCONDITIONED SPACES SEALED WITH A GASKET OR CAULK.
18. RECEPTACLE OUTLETS ARE NOT TO BE INSTALLED BACK TO BACK.

KITCHEN

K1. KITCHEN RECEPTACLES & SWITCHES MOUNTED A MAXIMUM HEIGHT OF +44" AFF TO THE TOP OF DEVICE. REFER TO ARCHITECTURAL ELEVATIONS FOR EXACT HEIGHT AND MOUNTING.
K2. ON RAISED KITCHEN BARTOP, MOUNT HORIZONTALLY AT +43" AFF TO TOP OF BOX.
K3. L-SHAPED KITCHENS: ONE OUTLET MUST BE LOCATED A MINIMUM 36" FROM THE OUTSIDE OF THE CORNER FOR ACCESSIBILITY.
K4. PROVIDE GFCI/AFCI COMBINATION CIRCUIT BREAKERS FOR ALL RECEPTACLES LOCATED WITHIN 6-FT OF A KITCHEN SINK, THIS APPLIES TO KITCHEN APPLIANCE RECEPTACLES.

BATHROOM

B1. RESTROOM EXHAUST FAN – EF-1: PROVIDE INTEGRATED MULTI-SPEED MODEL WITH CONDENSATION SENSOR PANASONIC FV-CSVK1 AND MOTION SENSOR PANASONIC FV-MSVK1. PROVIDE PERMANENT PLAQUE THAT READS "THIS SWITCH CONTROLS THE INDOOR AIR QUALITY VENTILATION FOR THE APARTMENT UNIT, LEAVE IT ON UNLESS THE OUTDOOR AIR QUALITY IS VERY POOR".
B2. BATHROOM: RECEPTACLE AND SWITCH TO BE 46" AFF TO TOP OF THE BOX.
B3. BATHROOM SWITCHING: FIRST SWITCH (DIMMER) IS TO CONTROL THE VANITY. SECOND SWITCH (VACANCY) IS TO CONTROL THE DOWNLIGHT.

PYATOK
1611 TELEGRAPH AVE.
SUITE 200
OAKLAND, CA 94612
T. 510.465.7010 | F. 510.465.8575
www.pyatok.com

THE UNITY COUNCIL
1900 FRUITVALE AVE
#2A
OAKLAND, CA 94601

EMERALD CITY ENGINEERS, INC
21705 Highway 99 Lynnwood, WA 98036 425-741-1200 tel / 1201 fax

2700 INTERNATIONAL

OAKLAND, CA 94601

STAMP: REGISTERED PROFESSIONAL ENGINEER – ANDREW C. FRENCH – 21942 – EXP. 3-31-23 – ELECTRICAL – STATE OF CALIFORNIA – 12/09/22

ISSUE SCHEDULE

100 SD	5/11/22
50 DD	7/15/22
100 DD	9/16/22
PRICING SET	11/11/22
PERMIT SET	12/09/22

REVISION SCHEDULE

NO.	ISSUE	DATE

JOB NUMBER:	2049-008
DRAWN BY:	TH
CHECKED BY:	AF
ISSUE DATE:	12/09/2022
SCALE:	

TITLE: **UNIT PLANS**

SHEET: **E4.02**

PRELIMINARY - Not for Construction -

© 2019 PYATOK ARCHITECTURE & URBAN DESIGN

4/22/2022 6:28:22 PM

COPYRIGHT 2022, EMERALD CITY ENGINEERS, INC.
T:\PROJ\2049-008 2700 INTERNATIONAL, OAKLAND, CA\DWG\E402 - UNIT PLANS.DWG 11-29-2022 15:30

UNIT TYPE C1 – MOBILITY

SCALE: 1/4" = 1'-0"

UNIT TYPE C2

SCALE: 1/4" = 1'-0"

UNIT TYPE B1 – MANAGER'S

SCALE: 1/4" = 1'-0"

DOORBELL SCHEDULE:

DOORBELL 120V POWER TO BE FROM NEAREST GENERAL PURPOSE LIGHTING/RECEPTACLE CIRCUIT. DOORBELL SYSTEM TO BE CAPABLE OF ADDING A VISUAL STROBE.

- DOORBELL PUSH-BUTTON: MODEL: NUTONE #PB41LSN CONFIRM FINISH WITH ARCH. MOUNTING: +48" TO TOP
- DOORBELL TRANSFORMER: MODEL: NUTONE #C905 MOUNTING: LOCATED IN CLOSET
- DOORBELL CHIME: MODEL: NUTONE #LA11WH MOUNTING: +80" TO BOTTOM

ACCESSIBLE COMMUNICATION UNITS (REF ARCH FOR LOCATION): PROVIDE VISUAL AND AUDIBLE ALARMS

- CHIME & STROBE: EDWARDS 6536-G5
- TRANSFORMER: EDWARDS 592
- PUSHBUTTON: EDWARDS 620/147-10 (147-10 NAMEPLATE: "HOLD BUTTON FOR 5 SECONDS")

BRANCH CIRCUIT VOLTAGE DROP TABLE:

2% MAXIMUM ALLOWABLE DROP

APARTMENT BRANCH CIRCUIT VOLTAGE DROP CALCULATIONS

Vd = VOLTAGE DROP
K = RESISTANCE IN OHMS OF ONE CIRCULAR MIL FOOT OF CONDUCTOR
[K = 12.9 FOR COPPER CONDUCTORS, K = 21.2 FOR ALUMINUM CONDUCTORS]
L = ONE-WAY LENGTH OF CIRCUIT (FOR SINGLE PHASE FEEDERS)
I = CURRENT
Cm = CROSS SECTION AREA OF CONDUCTOR

$$Vd = \frac{2K \times L \times I}{Cm}$$

	FEEDER LENGTH (ft)	CALCULATED LOAD (kVA)	VOLTAGE (Volts)	CURRENT (Amps)	WIRE SIZE (CU)	Cm (cmil)	VOLTAGE DROP (Volts)	% VOLT DROP
STOVE	68	8.1	208	38.9	#8 CU	16510	4.1	1.99%
KITCHEN APPL	48	1.5	120	12.5	#12 CU	6530	2.4	1.98%
MICRO/HOOD	48	1.5	120	12.5	#12 CU	6531	2.4	1.98%
DW	60	1.2	120	10.0	#12 CU	6530	2.4	1.98%
DISP	60	1.2	120	10.0	#12 CU	6530	2.4	1.98%
BED/LIVING	60	1.2	120	10.0	#12 CU	6530	2.4	1.98%
DRYER	68	5	208	24.0	#10 CU	10380	4.1	1.95%
WASHER	48	1.5	120	12.5	#12 CU	6530	2.4	1.98%

DISTANCES SHOWN HERE ARE FOR FEEDER VOLTAGE DROP CALCULATIONS ONLY AND SHOULD NOT BE USED TO DETERMINE THE AMOUNT OF MATERIAL NEEDED FOR CONSTRUCTION.

DEVICE KEY & WIRING LEGEND:

SYMBOL:	DEVICE NAME & INFO:	WIRE SIZE:	CIRCUITING NOTES:
S		2#8,#8N,#10G	DEDICATED CIRCUIT
M/H	MICROWAVE HOOD, +76"	1#12,#12N,#12G	DEDICATED CIRCUIT, AFCI/GFCI
DW	DISHWASHER, +20"	1#12,#12N,#12G	DEDICATED CIRCUIT, AFCI/GFCI
$ DISP	DISPOSAL, +20"	1#12,#12N,#12G	DEDICATED CIRCUIT, AFCI/GFCI
R	REFRIGERATOR, +30"	–	GROUP W/ SMALL APPLIANCE CKTS
D	CLOTHES DRYER, +30"	2#10,#10N,#10G	DEDICATED CIRCUIT (MANAGERS ONLY)
W	CLOTHES WASHER, +30"	1#12,#12N,#12G	DEDICATED CIRCUIT, AFCI/GFCI (MANAGERS ONLY)
$ HPAC	EPHOCA PTAC (20A VERSION)	20A: 2#12,#12G	HARD WIRED WITH SHUTOFF SWITCH (REQUIRED BY CODE), CONFIRM LOCATION OF SWITCH WITH OWNER
0.75KW FH	ELECTRIC RESISTANCE FAN HEATER, 0.75KW	2#12,#12G	WITH LINE VOLTAGE PROGRAMMABLE TSTAT. LOCKABLE CIRCUIT BREAKER.
	BATH CKT:	1#12,#12N,#12G	CIRCUIT TO SERVE BATHROOM LIGHTING, FAN, & RECEPTACLE LOADS ONLY.
	BED CKT:	1#14,#14N,#14G 15A (AFCI)	CIRCUIT BEDROOM LIGHTING, RECEPTACLES, SMART BOX RECEPTACLE.
	LIVING CKT:	1#14,#14N,#14G 15A (AFCI)	CIRCUIT BEDROOM LIGHTING, RECEPTACLES, 120V SMOKE DETECTORS.
	KITCHEN CKT #1:	1#12,#12N,#12G (AFCI/GFCI)	CIRCUIT #1 SERVING THE KITCHEN COUNTER RECEPTACLES (INCLUDING REFRIGERATOR)
	KITCHEN CKT #2 (WITH DINING):	1#12,#12N,#12G (AFCI/GFCI)	KITCHEN CIRCUIT #2 SERVING THE KITCHEN COUNTER RECEPTACLES AND DINING RECEPTACLES.

ALL BRANCH CIRCUITS ARE COPPER.
TYPE III OR V BUILDINGS: ROMEX
TYPE I OR II BUILDINGS: MC CABLE

REFER TO DWELLING UNIT PANEL SCHEDULE(S) ON SHEET E5.04

FLAG NOTES:

1. PROVIDE RECESSED SMART BOX WITH INTEGRAL DUPLEX RECEPTACLE. PROVIDE HOMERUNS TO NEAREST COMMUNICATIONS CLOSET. SEE E6.02 FOR DETAILS.
2. PATIO LIGHT SWITCH TO BE ASTRONOMICAL TIMER BUILT INTO A SINGLE GANG JBOX (2016 T24 REQUIREMENT): LEVITON VPT24-1PZ. PROGRAM TO TURN ON/OFF AT SUNSET/SUNRISE.
3. RECEPTACLE LOCATED IN FACE OF UPPER CABINET TO ACHIEVE CODE REACH RANGE COMPLIANCE. ROUTE MC CABLE THROUGH CABINETRY.
4. COORDINATE WITH GC RECEPTACLE MOUNTING TO END OF WING WALL. MOUNT WITHIN 12" OF COUNTERTOP SURFACE PER CEC 210.52(C)(5).
5. HALF-HOT SWITCHED DUPLEX OUTLET. MOUNT UPSIDE DOWN TO VISUALLY DIFFERENTIATE RECEPTACLE.
6. DINING ROOM RECEPTACLE CIRCUITED TO 'SMALL APPLIANCE KITCHEN BRANCH CIRCUIT' WITH AFCI PROTECTION, REFER TO PANEL SCHEDULE. GFCI PROVIDED BY CIRCUIT BREAKER.
7. IN ACCESSIBLE UNITS, PROVIDE SWITCHES FOR HOOD (FAN AND LIGHT SEPARATELY), LOCATE AT 44" TO TOP.
8. EF-1: BATHROOM EXHAUST FAN IS PART OF THE BALANCED VENTILATION SYSTEM, PROVIDE SHUTOFF SWITCH THAT KILLS POWER TO THE EXHAUST FAN. PROVIDE PERMANENT PLAQUE PER NOTE B1 BELOW.
9. REFER TO DETAIL 1 ON SHEET E5.04.

SHEET NOTES:

GENERAL

1. ALL DWELLING UNIT RECEPTACLES TO BE TAMPER RESISTANT PER CEC 406.11.
2. REFER TO ARCHITECTURAL UNIT PLANS FOR DIMENSIONS OF CEILING LIGHTING FIXTURES.
3. GANG OUTLET DEVICES WHERE POSSIBLE.
4. SMOKE & COMBO SMOKE/CO DETECTORS IN UNITS, PHOTOELECTRIC TYPE, NOT IONIZING, 120V WITH BATTERY BACKUP, INTERCONNECTED WITHIN UNIT FOR COMMON ALARM, PER CODE. LOCATE MINIMUM 10FT AWAY FROM STOVES, 3FT AWAY FROM BATHROOM DOORS (WHERE POSSIBLE), 36" AWAY FROM PADDLE FANS AND TRANSFER FANS, 36" HORIZONTAL PATH FROM SUPPLY DIFFUSER.
5. WATER PROOF GFCI RECEPTACLES ARE REQUIRED AT ALL BALCONIES & GROUND/PODIUM PORCHES.
6. ALL UNITS: FIRE ALARM SYSTEM SHALL BE CAPABLE OF SUPPORTING VISUAL STROBE FIRE ALARM, REFER TO E00 DESIGN/BUILD FIRE ALARM NOTES.
7. MINI FIRE ALARM HORN PART OF BUILDING FIRE ALARM SYSTEM WITH LOW FREQUENCY SOUNDER BASES.
8. FAN HEATERS: IF INSTALLED IN RATED WALLS MUST BE WRAPPED WITH SHEET ROCK TO MAINTAIN RATING OF THE WALL. CONFIRM KW RATING WITH MECH CONTRACTOR
9. FAN HEATER THERMOSTATS: TSTATS FOR ELECTRIC FAN HEATERS ARE LINE VOLTAGE (PROVIDED BY EC), AND BE DIGITAL 7-DAY PROGRAMMABLE MEETING T24.
10. LOOPS OR SWITCHGROUPS INDICATE LIGHT FIXTURES (&/OR RECEPTACLES) CONTROLLED BY SWITCH. $a $
11. NOT USED.
12. NOT USED.
13. PANCAKE BOXES SHOULD BE PROVIDED IN LOCATIONS WHERE STRUCTURAL HOLD DOWNS PREVENT RECEPTACLE/SWITCH PLACEMENTS AS PRESCRIBED PER CODE.
14. PROVIDE GFCI RECEPTACLES WITHIN 6-FT OF ALL SINKS, INCLUDING THE KITCHEN SINK.
15. AFCI PROTECTION: REQUIRES THE MAXIMUM LENGTH OF BRANCH CIRCUIT WIRING FROM THE OVERCURRENT DEVICE TO THE FIRST OUTLET SHALL NOT EXCEED 50-FT FOR #14 AWG OR 70-FT FOR #12 AWG. THE FIRST OUTLET BOX IN THE BRANCH CIRCUIT SHALL BE MARKED TO INDICATE THAT IT IS THE FIRST OUTLET OF THE CIRCUIT "AFCI FIRST OUTLET".
16. LOAD CENTERS TO BE MOUNTED 48" AFF TO TOP OF TOP CIRCUIT BREAKER.
17. T24 2019: ALL RECESSED LIGHTS AND FAN/LIGHT COMBOS TO BE SEALED WITH A GASKET OR CAULK BETWEEN THE LUMINAIRE HOUSING AND CEILING, AND SHALL HAVE ALL AIR LEAK PATHS BETWEEN CONDITIONED AND UNCONDITIONED SPACES SEALED WITH A GASKET OR CAULK.
18. RECEPTACLE OUTLETS ARE NOT TO BE INSTALLED BACK TO BACK.

KITCHEN

K1. KITCHEN RECEPTACLES & SWITCHES MOUNTED A MAXIMUM HEIGHT OF +44" AFF TO THE TOP OF DEVICE. REFER TO ARCHITECTURAL ELEVATIONS FOR EXACT HEIGHT AND MOUNTING.
K2. ON RAISED KITCHEN BARTOP, MOUNT HORIZONTALLY AT +43" AFF TO TOP OF BOX.
K3. L-SHAPED KITCHENS: ONE OUTLET MUST BE LOCATED A MINIMUM 36" FROM THE OUTSIDE OF THE CORNER FOR ACCESSIBILITY.
K4. PROVIDE GFCI/AFCI COMBINATION CIRCUIT BREAKERS FOR ALL RECEPTACLES LOCATED WITHIN 6-FT OF A KITCHEN SINK, THIS APPLIES TO KITCHEN APPLIANCE RECEPTACLES.

BATHROOM

B1. RESTROOM EXHAUST FAN – EF-1: PROVIDE INTEGRATED MULTI-SPEED MODEL WITH CONDENSATION SENSOR PANASONIC FV-CSVK1 AND MOTION SENSOR PANASONIC FV-MSVK1. PROVIDE PERMANENT PLAQUE THAT READS "THIS SWITCH CONTROLS THE INDOOR AIR QUALITY VENTILATION FOR THE APARTMENT UNIT, LEAVE IT ON UNLESS THE OUTDOOR AIR QUALITY IS VERY POOR".
B2. BATHROOM: RECEPTACLE AND SWITCH TO BE 46" AFF TO TOP OF THE BOX.
B3. BATHROOM SWITCHING: FIRST SWITCH (DIMMER) IS TO CONTROL THE VANITY. SECOND SWITCH (VACANCY) IS TO CONTROL THE DOWNLIGHT.

PYATOK
1611 TELEGRAPH AVE.
SUITE 200
OAKLAND, CA 94612
T. 510.465.7010 | F. 510.465.8575
www.pyatok.com

THE UNITY COUNCIL
1900 FRUITVALE AVE
#2A
OAKLAND, CA 94601

EMERALD CITY ENGINEERS, INC
21705 Highway 99 Lynnwood, WA 98036 425-741-1200 tel / 1201 fax

2700 INTERNATIONAL

OAKLAND, CA 94601

STAMP: REGISTERED PROFESSIONAL ENGINEER ADAM C. FRENCH E1942 EXP. 3-31-23 ELECTRICAL STATE OF CALIFORNIA 12-09-22

ISSUE SCHEDULE

100 SD	5/11/22
50 DD	7/15/22
100 DD	9/16/22
PRICING SET	11/11/22
PERMIT SET	12/09/22

REVISION SCHEDULE

NO.	ISSUE	DATE

JOB NUMBER:	2049-008
DRAWN BY:	TH
CHECKED BY:	AF
ISSUE DATE:	12/09/2022
SCALE:	

TITLE: **UNIT PLANS**

SHEET: **E4.03**

PRELIMINARY - Not for Construction -

© 2019 PYATOK ARCHITECTURE & URBAN DESIGN

COPYRIGHT 2022, EMERALD CITY ENGINEERS, INC.
THUYNH J:\2049-008 2700 INTERNATIONAL, OAKLAND, CA\DWG\E403 - UNIT PLANS.DWG 11-29-2022 15:30

4/22/2022 6:28:22 PM

FEEDER SCHEDULE

FEEDER AMPS	CONDUIT AND FEEDER	FEEDING THESE DEVICES
100	1-1/2"C,3#1/0 AL,#1/0 AL N,#6 AL G	E1, E2, E5, INV, L1, L2, L5
100	1-1/2"C,3#1,#1N,#6G	ELEV-A, ELEV-B
100	1-1/2"C,3#1/0 AL,#1/0 AL N,#6 AL G	INV
250	3"C,3#350kcmil AL,#350kcmil AL N,#2 AL G	M1, M2, M5, P1A, P1B, P2, P5
400	(2)2-1/2"C,3#250kcmil AL,#250kcmil AL N,#1 AL G	EV, L
500	(2)3"C,3#350kcmil AL,#350kcmil AL N,#1/0 AL G	WH
1000	(3)3"C,3#400kcmil,#400kcmil N,#2/0G	FP
1200	(4)3-1/2"C,3#500kcmil AL,#500kcmil AL N,#250kcmil AL G	METERBANK-A

SIZING METHOD: COPPER/ALUMINUM, 60°C #12 THROUGH #1, 75°C 1/0 AND ABOVE

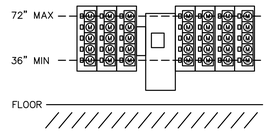

PER PG&E, ELECTRICAL METERS SHALL BE LOCATED ACCORDINGLY FOR MULTI-UNIT INSTALLATIONS:
-MINIMUM HEIGHT: 36" FROM THE FINISHED FLOOR TO THE CENTER OF THE METER.
-MAXIMUM HEIGHT: 72" FROM THE FINISHED FLOOR TO THE CENTER OF THE METER.
-A MAXIMUM OF 5 METERS MAY BE VERTICALLY STACKED.

METER HEIGHT REQUIREMENT (1)

SCALE: NONE

APARTMENT FEEDER SCHEDULE

VOLTAGE DROP DESIGN PARAMETERS:
2.5% ALLOWED MAXIMUM

MC CABLE

UNIT TYPE	FEEDER RANGE	FEEDER
1-BED	UNDER 140 FT	2#1AL, #1AL N, #6AL G
1-BED	140 - 176 FT	2#1/0AL, #1/0AL N, #4AL G
1-BED	176 - 222 FT	2#2/0AL, #2/0AL N, #4AL G
1-BED	222 - 280 FT	2#3/0AL, #3/0AL N, #3AL G
1-BED	280 - 353 FT	2#4/0AL, #4/0AL N, #2AL G
1-BED	353 - 417 FT	2#250AL, #250AL N, #1AL G
1-BED	417 - 501 FT	2#300AL, #300AL N, #1/0AL G
2-BED	UNDER 134 FT	2#1AL, #1AL N, #6AL G
2-BED	134 - 169 FT	2#1/0AL, #1/0AL N, #4AL G
2-BED	169 - 213 FT	2#2/0AL, #2/0AL N, #4AL G
2-BED	213 - 268 FT	2#3/0AL, #3/0AL N, #3AL G
2-BED	268 - 339 FT	2#4/0AL, #4/0AL N, #2AL G
2-BED	339 - 400 FT	2#250AL, #250AL N, #1AL G
2-BED	400 - 480 FT	2#300AL, #300AL N, #1/0AL G
2-BED MANAGER	UNDER 116 FT	2#1AL, #1AL N, #6AL G
2-BED MANAGER	116 - 146 FT	2#1/0AL, #1/0AL N, #4AL G
2-BED MANAGER	146 - 185 FT	2#2/0AL, #2/0AL N, #4AL G
2-BED MANAGER	185 - 233 FT	2#3/0AL, #3/0AL N, #3AL G
2-BED MANAGER	233 - 293 FT	2#4/0AL, #4/0AL N, #2AL G
2-BED MANAGER	293 - 347 FT	2#250AL, #250AL N, #1AL G
2-BED MANAGER	347 - 416 FT	2#300AL, #300AL N, #1/0AL G
3-BED	UNDER 130 FT	2#1AL, #1AL N, #6AL G
3-BED	130 - 164 FT	2#1/0AL, #1/0AL N, #4AL G
3-BED	164 - 207 FT	2#2/0AL, #2/0AL N, #4AL G
3-BED	207 - 261 FT	2#3/0AL, #3/0AL N, #3AL G
3-BED	261 - 329 FT	2#4/0AL, #4/0AL N, #2AL G
3-BED	329 - 389 FT	2#250AL, #250AL N, #1AL G
3-BED	389 - 466 FT	2#300AL, #300AL N, #1/0AL G

IT IS THE FULL RESPONSIBILITY OF THE ELECTRICAL CONTRACTOR TO DETERMINE FINAL FEEDER ROUTING. ROUTING SHOWN IS DIAGRAMMATIC. CONTRACTOR TO ENSURE ALL EQUIPMENT ORDERED CAN ACCOMMODATE THE WIRE SIZE AS SHOWN. EQUIPMENT SIZES SHOWN ARE THE MINIMUM REQUIRED BY CODE. LARGER EQUIPMENT MAY BE REQUIRED. JBOXES AND SPLICE BOXES ARE ALLOWED IF APPROVED BY THE LOCAL AHJ. WIRE SPLICE REDUCERS, WHEN NEEDED, AND IF APPROVED BY AHJ, ARE ACCEPTABLE. ANY ADDITIONAL INFORMATION IS TO BE REQUESTED DURING BIDDING. CHANGE ORDERS WILL NOT BE APPROVED.

CONTRACTOR TO NOTIFY ENGINEER DURING BIDDING PHASE IF FEEDER LENGTHS EXCEED THOSE SHOWN ON FEEDER SCHEDULE.

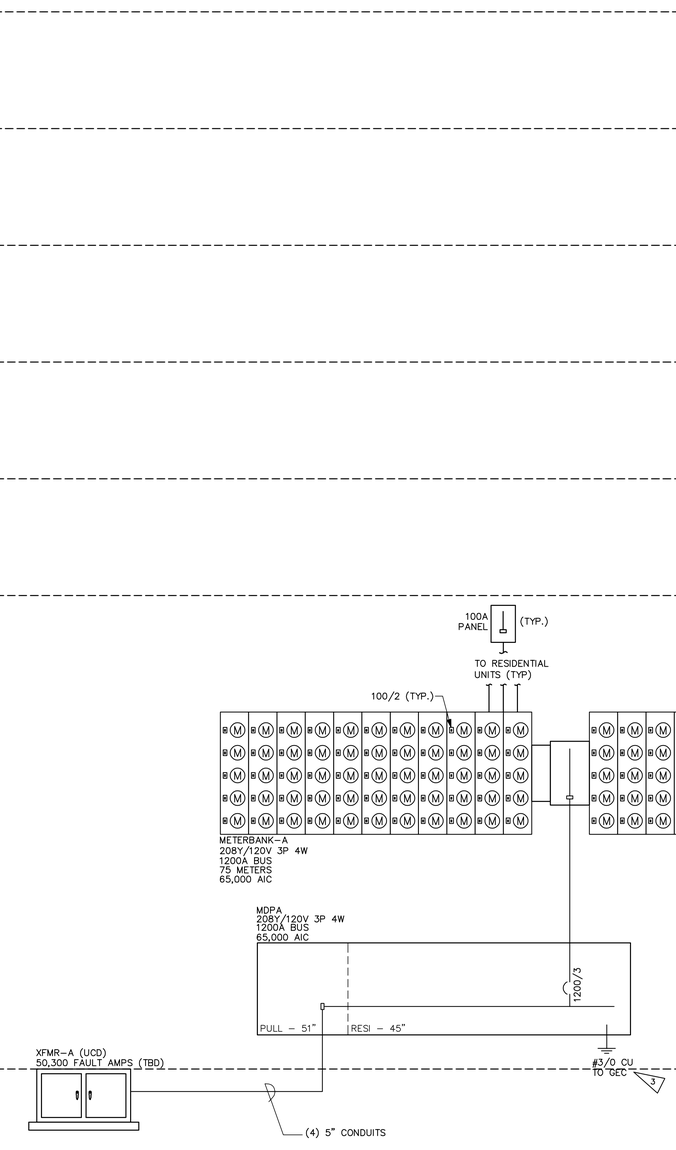

DISAGGREGATION OF LOADS

2019 TITLE 24 - SECTION 130.5(b):

FOR SERVICES IN WHICH THE TOTAL HOUSE LOAD IS GREATER THAN 50KVA, ELECTRIC LOADS MUST BE DESIGNATED AND DISAGGREGATED BY LOAD TYPE, SUCH THAT EACH LOAD TYPE MAY BE SEPARATELY METERED.

DISAGGREGATED METER INSTALLATION NOT REQUIRED.

ELECTRIC LOADS ARE TO BE SEPARATED AS WRITTEN BELOW:

1. LIGHTING (INCLUDING EGRESS AND EXTERIOR LIGHTING):
   - AGGREGATE METERING.
   - IF HOUSE SERVICE IS GREATER THAN 250KVA, DISAGGREGATE BY FLOOR, TYPE, OR AREA
2. HVAC SYSTEMS AND COMPONENTS (INCLUDING CHILLERS, FANS, HEATERS, FURNACES, PACKAGE UNITS, COOLING TOWERS, AND CIRCULATION PUMPS ASSOCIATED WITH HVAC):
   - AGGREGATE METERING
   - SEPARATE METERING CAPABILITY FOR EACH INDIVIDUAL HVAC LOAD EXCEEDING 50KVA.
3. DOMESTIC AND SERVICE WATER SYSTEM PUMPS AND RELATED SYSTEMS AND COMPONENTS:
   - AGGREGATE METERING
4. PLUG LOAD (INCLUDING ALL APPLIANCES RATED LESS THAN 25KVA):
   - AGGREGATE METERING
   - IF HOUSE SERVICE IS GREATER THAN 250KVA, DISAGGREGATE BY FLOOR, TYPE, OR AREA
   - SEPARATE METERING CAPABILITY FOR EACH GROUP OF PLUG LOADS THAT EXCEEDS 25kVA CONNECTED LOAD IN AN AREA LESS THAN 5000SF.
5. ELEVATORS, ESCALATORS, MOVING WALKS, AND TRANSIT SYSTEMS:
   - AGGREGATE METERING
6. OTHER INDIVIDUAL NON-HVAC LOADS OR APPLIANCES RATED 25KVA OR GREATER (EACH).
   - AGGREGATE METERING
7. INDUSTRIAL OR COMMERCIAL LOAD CENTERS 25KVA OR GREATER (INCLUDING COMMERICAL KITCHENS):
   - AGGREGATE METERING
8. RENEWABLE POWER SOURCES:
   - EACH GROUP TO BE METERED SEPARATELY.
9. CHARGING STATIONS FOR ELECTRIC VEHICLES:
   - AGGREGATE METERING

FOR EACH SEPARATE LOAD TYPE, UP TO 10% OF THE CONNECTED LOAD MAY BE OF ANY TYPE.

SOLAR PHOTOVOLTAIC CONNECTION

CEC 705.12(D)(2)
BUS OR CONDUCTOR RATING. THE SUM OF THE AMPERE RATINGS OF OVERCURRENT DEVICES IN CIRCUITS SUPPLYING POWER TO A BUSBAR OR CONDUCTOR SHALL NOT EXCEED 120 PERCENT OF THE RATING OF THE BUSBAR OR CONDUCTOR.

MDP
2,500A UTILITY + 400A INVERTERS = 2,900A

BUS RATING = 2,500A.

2,900/2,500 = 1.16.
BUS DOES NOT EXCEED 120%

ELECTRIC VEHICLE (EV) CHARGERS

PER CITY MUNICIPAL CODE, EV MUST BE PROVIDED FOR 12.5% OF PARKING STALLS

87 # OF STALLS @ 12.5% = 11 STALLS WITH EV PROVISIONS

3-PHASE LIGHTING INVERTER

CENTRAL 3PH INVERTER:

CFC 1206.2: STATIONARY STORAGE BATTERY SYSTEMS OF LEAD ACID TYPE HAVING CAPACITIES EXCEEDING 70KWH SHALL HAVE ADDITIONAL DESIGN PARAMETERS PER CFC 1206.2.

INV-1
MYERS INVERTER D-4-S 10KW

RUNTIME: 90 MINUTES
CURRENT: 81 AMPS

81A * 1.5HRS = 121.5AH
121.5AH * 144V/1000 = 17.5KWH
INVERTER DOES NOT EXCEED 70KWH THRESHOLD.

- AIC RATING TO MATCH UPSTREAM PANEL.
- PROVIDE MAIN BREAKER ON FIRST PANEL THAT IS DOWNSTREAM OF INVERTER.
- PROVIDE SURGE PROTECTIVE DEVICE ON ALL EMERGENCY AND LEGALLY REQUIRED STANDBY PANELBOARDS.
- INVERTERS TO BE LOCATED IN 2-HR RATED ROOMS PER NFPA 110.
- INVERTERS SHALL NOT BE LOCATED IN ROOMS WITH 480V SERVICE EQUIPMENT.
- PROVIDE MONITORING OF INVERTERS FROM FIRE ALARM SYSTEM.

FLAG NOTES:

1. ELECTRICAL DESIGN IS BASED ON 25 HP ELEVATOR MOTORS AND ARE FOR PRICING PURPOSES ONLY. VERIFY EXACT ELEVATOR OVERCURRENT FEEDER SIZES WITH ELEVATOR VENDOR PRIOR TO PURCHASE OF DEVICES AND FEEDERS. PROVIDE ELEVATOR MODULE WHICH PROVIDES OVERCURRENT PROTECTION (THROUGH CLASS J FUSES), SHUNT TRIP CAPABILITIES, AUXILIARY CONTACT, AND SELECTIVE COORDINATION. BUSSMANN POWER SWITCH MODULE OR APPROVED EQUAL.
2. SPACE FOR CONNECTION OF FUTURE SOLAR PV PANEL. PROVIDE CIRCUIT BREAKER FRAME SUITABLE FOR BACKFEED. LOCATE AT END OF PANEL BUS. CONFIRM SIZE WITH SOLAR PV VENDOR.
3. TO GROUNDING ELECTRODE SYSTEM, SEE DETAIL 6/E6.04
4. LOCKABLE SOLAR DISCONNECT SWITCH, PROVIDED BY ELECTRICAL CONTRACTOR WITH CONDUIT ROUTED TO ROOF.
5. 10KW SELF-CONTAINED 3-PHASE INVERTER BATTERY SYSTEM, UL924, RATED FOR 90 MINUTE BACKUP FOR EMERGENCY LIGHTING. 208V/120V 3P4W INPUT/OUTPUT WITH MAIN BREAKER. UNIT IS FLOOR MOUNTED.
6. RETAIL SPACES: PROVIDE CONDUIT AND FEEDER FROM SWITCHGEAR TO JBOX ABOVE THE RETAIL DISTRIBUTION SECTION. PROVIDE CONDUIT WITH PULL STRING FROM JBOX TO RETAIL SPACE, SIZING AS SHOWN BELOW BASED ON AMPERAGE (JBOX AVOIDS SWITCHGEAR SHUTDOWN WITH RETAIL WORK):
   400A: (2) 3" CONDUIT, 4#250KCMIL AL, #1ALG
   200A: (1) 3" CONDUIT, 4#250KCMIL AL, #4ALG
   100A: (1) 2" CONDUIT, 4#1/0 AL, #6ALG
7. DIMMING PANEL FOR DEMAND RESPONSE, SEE DIMMING PANEL NOTES ON PANEL SCHEDULE.

SHEET NOTES:

1. PROVIDE PG&E SMART METER CONDUITS PER GREENBOOK REQUIREMENTS, REFER TO FLOOR PLANS FOR LOCATION.
2. 2019 CALIFORNIA ENERGY CODE: VOLTAGE DROP FROM SERVICE POINT TO LOAD TO NOT EXCEED 5%.
3. FIRE PUMP AND HOUSE METERS TO HAVE TEST-BYPASS.
4. CONTRACTOR TO PROVIDE ALL MATERIALS & LABOR TO PROVIDE CONDUIT FROM ELEVATOR CONTROL ROOM TO ELEVATOR SHAFT. COORDINATE WITH MANUFACTURER THE SIZE AND QUANTITY OF CONDUIT. ASSUME (4) 3" CONDUITS FOR PRICING.
5. EQUIPMENT MARKING SHALL BE PROVIDED FOR ALL ELECTRICAL EQUIPMENT PER CEC 110.21.
6. FURNISH AND INSTALL ARC-FLASH HAZARD MARKINGS FOR ALL EQUIPMENT PER 110.16. MARKINGS SHALL MEET THE REQUIREMENTS OF 110.21(B) AND SHALL BE CLEARLY VISIBLE TO QUALIFIED PERSONS BEFORE EXAMINATION, ADJUSTMENT, SERVICING, OR MAINTENANCE OF THE EQUIPMENT.
7. CIRCUIT BREAKER 1200A OR GREATER. PROVIDE ENERGY-REDUCING MAINTENANCE SWITCH FOR ARC ENERGY REDUCTION PER CEC 240.87.
8. * THE INTERRUPTING RATING OF ALL NEW DOWNSTREAM LOADS SHALL BE VERIFIED WITH PG&E PRIOR TO PROCUREMENT AND INSTALLATION. IN ADDITION, THE AVAILABLE FAULT CURRENT INFORMATION (ONCE IT IS MADE AVAILABLE) SHALL ALSO BE PROVIDED TO SSF DESIGN REVIEW PRIOR TO INSTALLATION.
   * UPON RECEIPT OF THE AVAILABLE FAULT CURRENT INFORMATION, THE ELECTRICAL ENGINEER OF RECORD SHALL VERIFY THAT THE PROPOSED ELECTRICAL EQUIPMENT ARE ADEQUATELY BRACED TO WTHSTAND THE AVAILABLE FAULT CURRENT AT THE ELECTRICAL SERVICE. THE ELECTRICAL SYSTEM SHALL BE SUBJECT TO VERIFICATION AND FINAL ACCEPTANCE BY AHJ.
9. CONTRACTOR TO SUBMIT SWITCHGEAR PLANS TO UTILITY PRIOR TO ORDERING.
10. CIRCUIT BREAKERS 400A AND LARGER TO HAVE FIELD-ADJUSTABLE, SHORT-TIME AND CONTINUOUS-CURRENT SETTINGS.

FIRE PUMP

1.1. CEC 695.3(A)(1): FIRE PUMP TAP SHALL NOT BE WITHIN THE SAME VERTICAL SWITCHBOARD SECTION AS THE SERVICE DISCONNECTING MEANS.
1.2. CEC 695.14(1): CONTROL WIRING SHALL BE INDEPENDENT OF OTHER WIRES WITH 2-INCHES OF CONCRETE PROTECTION.
1.3. IF OVERCURRENT PROTECTION IS PROVIDED, IT MUST BE ABLE TO HANDLE LOCKED ROTOR CURRENT INDEFINITELY AND BE MONITORED BY THE FIRE ALARM SYSTEM.
1.4. THERE SHALL BE NO OVERLOAD PROTECTION OF FIRE PUMP.
1.5. CONDUCTORS SHALL BE SIZED TO HANDLE FLA AT 125%.
1.6. VOLTAGE DROP: MAX OF 5% WHEN FIRE PUMP IS RUNNING AT 115%.
1.7. FIRE PUMP SIZE IS SHOWN FOR BID PURPOSES ONLY. IF SIZE EXCEEDS DESIGN AS SHOWN, ENGINEER IS TO BE NOTIFIED IMMEDIATELY FOR DESIGN CHANGE REQUIREMENTS.
1.8. FIRE PUMP CONTROLLERS TO HAVE COPPER WIRING ONLY. NO ALUMINUM WIRING IS ALLOWED FOR FIRE PUMP CONTROLLERS.
1.9. ALL WIRING METHODS TO THE FIRE PUMP, DRIVE, CONTROLLER SHALL BE SUITABLE FOR WET LOCATIONS.
1.10. BREAKER IN THE FIRE PUMP ENCLOSURE SHALL BE MARKED "FIRE PUMP DISCONNECTING MEANS AND MUST BE CAPABLE OF BEING LOCKED IN THE CLOSED POSITION."
1.11. FIRE PUMP CIRCUIT CONDUITS INSIDE OF A BUILDING SHALL BE ENCASED IN NO LESS THAN 2" OF CONCRETE. 695.5(A)(2)(a)(1).

PYATOK
1611 TELEGRAPH AVE.
SUITE 200
OAKLAND, CA 94612
T. 510.465.7010 | F. 510.465.8575
www.pyatok.com

EMERALD CITY ENGINEERS, INC
21705 Highway 99 Lynnwood, WA
98036 425-741-1200 tel / 1201 fax

2700 INTERNATIONAL

OAKLAND, CA 94601

THE UNITY COUNCIL
1900 FRUITVALE AVE
#2A
OAKLAND, CA
94601

STAMP:

REGISTERED PROFESSIONAL ENGINEER
THOMAS C. HSIEH
E19421
EXP. 3-31-23
ELECTRICAL
STATE OF CALIFORNIA
12-09-22

ISSUE SCHEDULE

100 SD	5/11/22
50 DD	7/15/22
100 DD	9/16/22
PRICING SET	11/11/22
PERMIT SET	12/09/22

REVISION SCHEDULE

NO.	ISSUE	DATE

JOB NUMBER:	2049-008
DRAWN BY:	TH
CHECKED BY:	AF
ISSUE DATE:	12/09/2022
SCALE:	
TITLE:	ONELINE DIAGRAM

SHEET:

E5.01

PRELIMINARY - Not for Construction -

© 2019 PYATOK ARCHITECTURE & URBAN DESIGN

4/22/2022 6:28:22 PM

COPYRIGHT 2022, EMERALD CITY ENGINEERS, INC.
T:\PROJ\2049-008 2700 INTERNATIONAL, OAKLAND, CA\DWG\E501 ONELINE DIAGRAM.DWG 11-29-2022 15:30

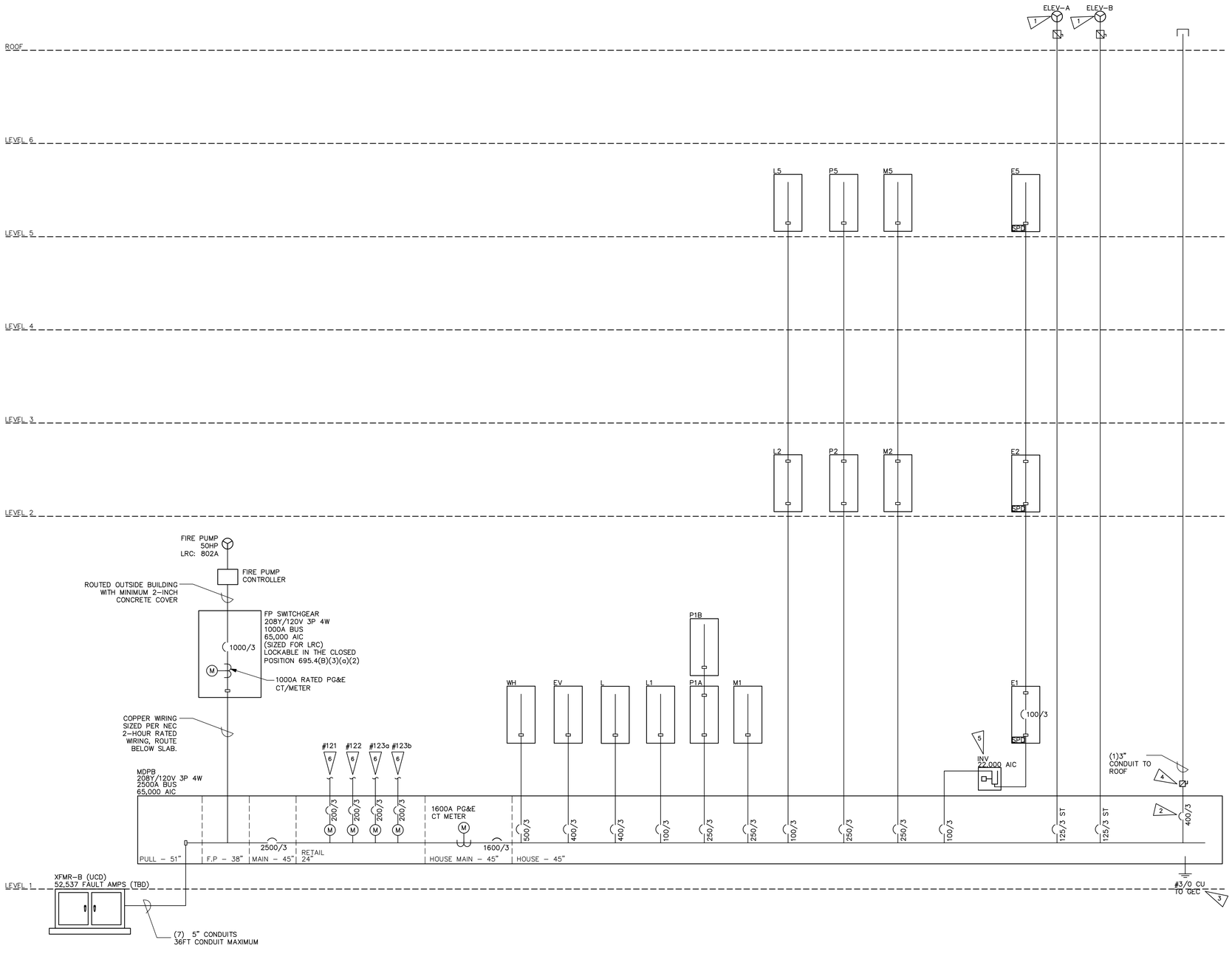

DISAGGREGATION OF LOADS

2019 TITLE 24 – SECTION 130.5(b):

FOR SERVICES IN WHICH THE TOTAL HOUSE LOAD IS GREATER THAN 50KVA, ELECTRIC LOADS MUST BE DESIGNATED AND DISAGGREGATED BY LOAD TYPE, SUCH THAT EACH LOAD TYPE MAY BE SEPARATELY METERED.

DISAGGREGATED METER INSTALLATION NOT REQUIRED.

ELECTRIC LOADS ARE TO BE SEPARATED AS WRITTEN BELOW:

1. LIGHTING (INCLUDING EGRESS AND EXTERIOR LIGHTING):
   - AGGREGATE METERING.
   - IF HOUSE SERVICE IS GREATER THAN 250KVA, DISAGGREGATE BY FLOOR, TYPE, OR AREA
2. HVAC SYSTEMS AND COMPONENTS (INCLUDING CHILLERS, FANS, HEATERS, FURNACES, PACKAGE UNITS, COOLING TOWERS, AND CIRCULATION PUMPS ASSOCIATED WITH HVAC):
   - AGGREGATE METERING
   - SEPARATE METERING CAPABILITY FOR EACH INDIVIDUAL HVAC LOAD EXCEEDING 50KVA.
3. DOMESTIC AND SERVICE WATER SYSTEM PUMPS AND RELATED SYSTEMS AND COMPONENTS:
   - AGGREGATE METERING
4. PLUG LOAD (INCLUDING ALL APPLIANCES RATED LESS THAN 25KVA):
   - AGGREGATE METERING
   - IF HOUSE SERVICE IS GREATER THAN 250KVA, DISAGGREGATE BY FLOOR, TYPE, OR AREA
   - SEPARATE METERING CAPABILITY FOR EACH GROUP OF PLUG LOADS THAT EXCEEDS 25kVA CONNECTED LOAD IN AN AREA LESS THAN 5000SF.
5. ELEVATORS, ESCALATORS, MOVING WALKS, AND TRANSIT SYSTEMS:
   - AGGREGATE METERING
6. OTHER INDIVIDUAL NON-HVAC LOADS OR APPLIANCES RATED 25KVA OR GREATER (EACH).
   - AGGREGATE METERING
7. INDUSTRIAL OR COMMERCIAL LOAD CENTERS 25KVA OR GREATER (INCLUDING COMMERICAL KITCHENS):
   - AGGREGATE METERING
8. RENEWABLE POWER SOURCES:
   - EACH GROUP TO BE METERED SEPARATELY.
9. CHARGING STATIONS FOR ELECTRIC VEHICLES:
   - AGGREGATE METERING

FOR EACH SEPARATE LOAD TYPE, UP TO 10% OF THE CONNECTED LOAD MAY BE OF ANY TYPE.

SOLAR PHOTOVOLTAIC CONNECTION

CEC 705.12(D)(2)
BUS OR CONDUCTOR RATING. THE SUM OF THE AMPERE RATINGS OF OVERCURRENT DEVICES IN CIRCUITS SUPPLYING POWER TO A BUSBAR OR CONDUCTOR SHALL NOT EXCEED 120 PERCENT OF THE RATING OF THE BUSBAR OR CONDUCTOR.

MDP
2,500A UTILITY + 400A INVERTERS = 2,900A

BUS RATING = 2,500A.

2,900/2,500 = 1.16.
BUS DOES NOT EXCEED 120%

ELECTRIC VEHICLE (EV) CHARGERS

PER CITY MUNICIPAL CODE, EV MUST BE PROVIDED FOR 12.5% OF PARKING STALLS

87 # OF STALLS @ 12.5% = 11 STALLS WITH EV PROVISIONS

3-PHASE LIGHTING INVERTER

CENTRAL 3PH INVERTER:

CFC 1206.2: STATIONARY STORAGE BATTERY SYSTEMS OF LEAD ACID TYPE HAVING CAPACITIES EXCEEDING 70KWH SHALL HAVE ADDITIONAL DESIGN PARAMETERS PER CFC 1206.2.

INV-1
MYERS INVERTER D-4-S 10KW

RUNTIME: 90 MINUTES
CURRENT: 81 AMPS

81A * 1.5HRS = 121.5AH
121.5AH * 144V/1000 = 17.5KWH
INVERTER DOES NOT EXCEED 70KWH THRESHOLD.

- AIC RATING TO MATCH UPSTREAM PANEL.
- PROVIDE MAIN BREAKER ON FIRST PANEL THAT IS DOWNSTREAM OF INVERTER.
- PROVIDE SURGE PROTECTIVE DEVICE ON ALL EMERGENCY AND LEGALLY REQUIRED STANDBY PANELBOARDS.
- INVERTERS TO BE LOCATED IN 2-HR RATED ROOMS PER NFPA 110.
- INVERTERS SHALL NOT BE LOCATED IN ROOMS WITH 480V SERVICE EQUIPMENT.
- PROVIDE MONITORING OF INVERTERS FROM FIRE ALARM SYSTEM.

FLAG NOTES:

1. ELECTRICAL DESIGN IS BASED ON 25 HP ELEVATOR MOTORS AND ARE FOR PRICING PURPOSES ONLY. VERIFY EXACT ELEVATOR OVERCURRENT FEEDER SIZES WITH ELEVATOR VENDOR PRIOR TO PURCHASE OF DEVICES AND FEEDERS.
   PROVIDE ELEVATOR MODULE WHICH PROVIDES OVERCURRENT PROTECTION (THROUGH CLASS J FUSES), SHUNT TRIP CAPABILITIES, AUXILIARY CONTACT, AND SELECTIVE COORDINATION. BUSSMANN POWER SWITCH MODULE OR APPROVED EQUAL.
2. SPACE FOR CONNECTION OF FUTURE SOLAR PV PANEL. PROVIDE CIRCUIT BREAKER FRAME SUITABLE FOR BACKFEED. LOCATE AT END OF PANEL BUS. CONFIRM SIZE WITH SOLAR PV VENDOR.
3. TO GROUNDING ELECTRODE SYSTEM, SEE DETAIL 6/E6.04
4. LOCKABLE SOLAR DISCONNECT SWITCH, PROVIDED BY ELECTRICAL CONTRACTOR WITH CONDUIT ROUTED TO ROOF.
5. 10KW SELF-CONTAINED 3-PHASE INVERTER BATTERY SYSTEM, UL924, RATED FOR 90 MINUTE BACKUP FOR EMERGENCY LIGHTING. 208V/120V 3P4W INPUT/OUTPUT WITH MAIN BREAKER. UNIT IS FLOOR MOUNTED.
6. RETAIL SPACES: PROVIDE CONDUIT AND FEEDER FROM SWITCHGEAR TO JBOX ABOVE THE RETAIL DISTRIBUTION SECTION. PROVIDE CONDUIT WITH PULL STRING FROM JBOX TO RETAIL SPACE, SIZING AS SHOWN BELOW BASED ON AMPERAGE (JBOX AVOIDS SWITCHGEAR SHUTDOWN WITH RETAIL WORK):
   400A: (2) 3" CONDUIT, 4#250KCMIL AL, #1ALG
   200A: (1) 3" CONDUIT, 4#250KCMIL AL, #4ALG
   100A: (1) 2" CONDUIT, 4#1/0 AL, #6ALG
7. DIMMING PANEL FOR DEMAND RESPONSE, SEE DIMMING PANEL NOTES ON PANEL SCHEDULE.

SHEET NOTES:

1. PROVIDE PG&E SMART METER CONDUITS PER GREENBOOK REQUIREMENTS, REFER TO FLOOR PLANS FOR LOCATION.
2. 2019 CALIFORNIA ENERGY CODE:
   VOLTAGE DROP FROM SERVICE POINT TO LOAD TO NOT EXCEED 5%.
3. FIRE PUMP AND HOUSE METERS TO HAVE TEST-BYPASS.
4. CONTRACTOR TO PROVIDE ALL MATERIALS & LABOR TO PROVIDE CONDUIT FROM ELEVATOR CONTROL ROOM TO ELEVATOR SHAFT. COORDINATE WITH MANUFACTURER THE SIZE AND QUANTITY OF CONDUIT. ASSUME (4) 3" CONDUITS FOR PRICING.
5. EQUIPMENT MARKING SHALL BE PROVIDED FOR ALL ELECTRICAL EQUIPMENT PER CEC 110.21.
6. FURNISH AND INSTALL ARC-FLASH HAZARD MARKINGS FOR ALL EQUIPMENT PER 110.16. MARKINGS SHALL MEET THE REQUIREMENTS OF 110.21(B) AND SHALL BE CLEARLY VISIBLE TO QUALIFIED PERSONS BEFORE EXAMINATION, ADJUSTMENT, SERVICING, OR MAINTENANCE OF THE EQUIPMENT.
7. CIRCUIT BREAKER 1200A OR GREATER. PROVIDE ENERGY-REDUCING MAINTENANCE SWITCH FOR ARC ENERGY REDUCTION PER CEC 240.87.
8. * THE INTERRUPTING RATING OF ALL NEW DOWNSTREAM LOADS SHALL BE VERIFIED WITH PG&E PRIOR TO PROCUREMENT AND INSTALLATION. IN ADDITION, THE AVAILABLE FAULT CURRENT INFORMATION (ONCE IT IS MADE AVAILABLE) SHALL ALSO BE PROVIDED TO SSF DESIGN REVIEW PRIOR TO INSTALLATION.
   * UPON RECEIPT OF THE AVAILABLE FAULT CURRENT INFORMATION, THE ELECTRICAL ENGINEER OF RECORD SHALL VERIFY THAT THE PROPOSED ELECTRICAL EQUIPMENT ARE ADEQUATELY BRACED TO WITHSTAND THE AVAILABLE FAULT CURRENT AT THE ELECTRICAL SERVICE. THE ELECTRICAL SYSTEM SHALL BE SUBJECT TO VERIFICATION AND FINAL ACCEPTANCE BY AHJ.
9. CONTRACTOR TO SUBMIT SWITCHGEAR PLANS TO UTILITY PRIOR TO ORDERING.
10. CIRCUIT BREAKERS 400A AND LARGER TO HAVE FIELD-ADJUSTABLE, SHORT-TIME AND CONTINUOUS-CURRENT SETTINGS.

FIRE PUMP

1.1. CEC 695.3(A)(1): FIRE PUMP TAP SHALL NOT BE WITHIN THE SAME VERTICAL SWITCHBOARD SECTION AS THE SERVICE DISCONNECTING MEANS.
1.2. CEC 695.14(I): CONTROL WIRING SHALL BE INDEPENDENT OF OTHER WIRES WITH 2-INCHES OF CONCRETE PROTECTION.
1.3. IF OVERCURRENT PROTECTION IS PROVIDED, IT MUST BE ABLE TO HANDLE LOCKED ROTOR CURRENT INDEFINITELY AND BE MONITORED BY THE FIRE ALARM SYSTEM.
1.4. THERE SHALL BE NO OVERLOAD PROTECTION OF FIRE PUMP.
1.5. CONDUCTORS SHALL BE SIZED TO HANDLE FLA AT 125%.
1.6. VOLTAGE DROP: MAX OF 5% WHEN FIRE PUMP IS RUNNING AT 115%.
1.7. FIRE PUMP SIZE IS SHOWN FOR BID PURPOSES ONLY. IF SIZE EXCEEDS DESIGN AS SHOWN, ENGINEER IS TO BE NOTIFIED IMMEDIATELY FOR DESIGN CHANGE REQUIREMENTS.
1.8. FIRE PUMP CONTROLLERS TO HAVE COPPER WIRING ONLY. NO ALUMINUM WIRING IS ALLOWED FOR FIRE PUMP CONTROLLERS.
1.9. ALL WIRING METHODS TO THE FIRE PUMP, DRIVE, CONTROLLER SHALL BE SUITABLE FOR WET LOCATIONS.
1.10. BREAKER IN THE FIRE PUMP ENCLOSURE SHALL BE MARKED "FIRE PUMP DISCONNECTING MEANS AND MUST BE CAPABLE OF BEING LOCKED IN THE CLOSED POSITION."
1.11. FIRE PUMP CIRCUIT CONDUITS INSIDE OF A BUILDING SHALL BE ENCASED IN NO LESS THAN 2" OF CONCRETE. 695.5(A)(2)(d)(1).

PYATOK
1611 TELEGRAPH AVE.
SUITE 200
OAKLAND, CA 94612
T. 510.465.7010 | F. 510.465.8575
www.pyatok.com

THE UNITY COUNCIL
1900 FRUITVALE AVE
#2A
OAKLAND, CA
94601

EMERALD CITY ENGINEERS, INC
21705 Highway 99 Lynnwood, WA
98036 425-741-1200 tel / 1201 fax

2700 INTERNATIONAL

OAKLAND, CA 94601

STAMP:
REGISTERED PROFESSIONAL ENGINEER
ADAM C. FRICK
E19421
EXP. 3-31-23
ELECTRICAL
STATE OF CALIFORNIA
12-09-22

ISSUE SCHEDULE

100 SD	5/11/22
50 DD	7/15/22
100 DD	9/16/22
PRICING SET	11/11/22
PERMIT SET	12/09/22

REVISION SCHEDULE

NO.	ISSUE	DATE

JOB NUMBER:	2049-008
DRAWN BY:	TH
CHECKED BY:	AF
ISSUE DATE:	12/09/2022
SCALE:	

TITLE:

ONELINE DIAGRAM

SHEET:

E5.02

PRELIMINARY - Not for Construction -

© 2019 PYATOK ARCHITECTURE & URBAN DESIGN

4/22/2022 6:28:22 PM

COPYRIGHT 2022, EMERALD CITY ENGINEERS, INC.
T:\PROJ\2049-008 2700 INTERNATIONAL, OAKLAND, CA\DWG\E502 ONELINE DIAGRAM.DWG 11-29-2022 15:30

Dwelling Unit Load - Optional Calculation
Apartment Type 2-BED MANAGER

based on 2017 NEC

Dwelling square footage (ft^2)	750		Loads (kVA)
Lighting and receptacle load (220 - 82 (B))	3 (VA/ft^2)	2.3	
Electric Clothes Dryer (220 - 54)	yes	5	
nameplate rating of Electric Stove		8.1	
total load of fixed in place electric cooking (1.75 to < 3kW)			
total load of fixed in place electric cooking (3 to < 8kW)			
Small Appliance circuits (2 required in kitchen by 210-52)		3	
All other appliance nameplate loads (220 - 82) (fixed in place)		4.2	
Fixed in place appliances excluding stoves, dryers, space heating, A/C, microw ave, toaster, blender. Include dishwasher (1.4kw), disposer (1.2kw), microwave/hood (1.6kw)			
Laundry circuit (220 - 52)	yes	1.5	
Bathroom circuit not required in calc (210-11) - See examples in Appendix D			
Lighting and small appliance load (220-82), first 10 kVA at 100%, remainder at 40% (kVA)		24.1	15.6

Largest of Electric Heat, Air Conditioning, or Heat Pump with Electric Heat

NEC 220.82(C) Only include the largest of the selections to the right

INDIVIDUAL ELEC HEATERS	1.50	(if less than 4 units, @ 65%)
INDIVIDUAL ELEC HEATERS		(if more than 4 units, @ 40%)
AUX HEAT WITH HEAT PUMP		Calculated at 65%
COMPRESSOR		Calculated at 100%
AC	2.90	Calculated at 100%
		3.9

Total Demand Load (kVA)	19.5
Service Voltage: 208/120 - 1	
Service Size (A)	94

Dwelling Unit Load - Optional Calculation
Apartment - 3 Bed

based on 2017 NEC

Dwelling square footage (ft^2)	800		Loads (kVA)
Lighting and receptacle load (220 - 82 (B))	3 (VA/ft^2)	2.4	
Electric Clothes Dryer (220 - 54)	no	0	
nameplate rating of Electric Stove		8.1	
total load of fixed in place electric cooking (1.75 to < 3kW)			
total load of fixed in place electric cooking (3 to < 8kW)			
Small Appliance circuits (2 required in kitchen by 210-52)		3	
All other appliance nameplate loads (220 - 82) (fixed in place)		4.2	
Fixed in place appliances excluding stoves, dryers, space heating, A/C, microw ave, toaster, blender. Include dishwasher (1.4kw), disposer (1.2kw), microwave/hood (1.6kw)			
Laundry circuit (220 - 52)	no	0	
Bathroom circuit not required in calc (210-11) - See examples in Appendix D			
Lighting and small appliance load (220-82), first 10 kVA at 100%, remainder at 40% (kVA)		17.7	13.1

Largest of Electric Heat, Air Conditioning, or Heat Pump with Electric Heat

NEC 220.82(C) Only include the largest of the selections to the right

INDIVIDUAL ELEC HEATERS	2.25	(if less than 4 units, @ 65%)
INDIVIDUAL ELEC HEATERS		(if more than 4 units, @ 40%)
AUX HEAT WITH HEAT PUMP		Calculated at 65%
COMPRESSOR		Calculated at 100%
AC	2.90	Calculated at 100%
		4.4

Total Demand Load (kVA)	17.4
Service Voltage: 208/120 - 1	
Service Size (A)	84

Dwelling Unit Load - Optional Calculation
Apartment - 2 Bed

based on 2017 NEC

Dwelling square footage (ft^2)	750		Loads (kVA)
Lighting and receptacle load (220 - 82 (B))	3 (VA/ft^2)	2.3	
Electric Clothes Dryer (220 - 54)	no	0	
nameplate rating of Electric Stove		8.1	
total load of fixed in place electric cooking (1.75 to < 3kW)			
total load of fixed in place electric cooking (3 to < 8kW)			
Small Appliance circuits (2 required in kitchen by 210-52)		3	
All other appliance nameplate loads (220 - 82) (fixed in place)		4.2	
Fixed in place appliances excluding stoves, dryers, space heating, A/C, microw ave, toaster, blender. Include dishwasher (1.4kw), disposer (1.2kw), microwave/hood (1.6kw)			
Laundry circuit (220 - 52)	no	0	
Bathroom circuit not required in calc (210-11) - See examples in Appendix D			
Lighting and small appliance load (220-82), first 10 kVA at 100%, remainder at 40% (kVA)		17.6	13.0

Largest of Electric Heat, Air Conditioning, or Heat Pump with Electric Heat

NEC 220.82(C) Only include the largest of the selections to the right

INDIVIDUAL ELEC HEATERS	1.50	(if less than 4 units, @ 65%)
INDIVIDUAL ELEC HEATERS		(if more than 4 units, @ 40%)
AUX HEAT WITH HEAT PUMP		Calculated at 65%
COMPRESSOR		Calculated at 100%
AC	2.90	Calculated at 100%
		3.9

Total Demand Load (kVA)	16.9
Service Voltage: 208/120 - 1	
Service Size (A)	81

Dwelling Unit Load - Optional Calculation
Apartment - 1 Bed

based on 2017 NEC

Dwelling square footage (ft^2)	557		Loads (kVA)
Lighting and receptacle load (220 - 82 (B))	3 (VA/ft^2)	1.7	
Electric Clothes Dryer (220 - 54)	no	0	
nameplate rating of Electric Stove		8.1	
total load of fixed in place electric cooking (1.75 to < 3kW)			
total load of fixed in place electric cooking (3 to < 8kW)			
Small Appliance circuits (2 required in kitchen by 210-52)		3	
All other appliance nameplate loads (220 - 82) (fixed in place)		4.2	
Fixed in place appliances excluding stoves, dryers, space heating, A/C, microw ave, toaster, blender. Include dishwasher (1.4kw), disposer (1.2kw), microwave/hood (1.6kw)			
Laundry circuit (220 - 52)	no	0	
Bathroom circuit not required in calc (210-11) - See examples in Appendix D			
Lighting and small appliance load (220-82), first 10 kVA at 100%, remainder at 40% (kVA)		17.0	12.8

Largest of Electric Heat, Air Conditioning, or Heat Pump with Electric Heat

NEC 220.82(C) Only include the largest of the selections to the right

INDIVIDUAL ELEC HEATERS	0.75	(if less than 4 units, @ 65%)
INDIVIDUAL ELEC HEATERS		(if more than 4 units, @ 40%)
AUX HEAT WITH HEAT PUMP		Calculated at 65%
COMPRESSOR		Calculated at 100%
AC	2.90	Calculated at 100%
		3.4

Total Demand Load (kVA)	16.2
Service Voltage: 208/120 - 1	
Service Size (A)	78

PYATOK
1611 TELEGRAPH AVE.
SUITE 200
OAKLAND, CA 94612
T. 510.465.7010 | F. 510.465.8575
www.pyatok.com

THE UNITY COUNCIL
1900 FRUITVALE AVE
#2A
OAKLAND, CA
94601

EMERALD CITY ENGINEERS, INC
21705 Highway 99 Lynnwood, WA
98036 425-741-1200 tel / 1201 fax

2700 INTERNATIONAL
OAKLAND, CA 94601

STAMP: REGISTERED PROFESSIONAL ENGINEER — JOHN C. FRENCH — 19427 — EXP. 3-31-23 — ELECTRICAL — STATE OF CALIFORNIA — 12-09-22

ISSUE SCHEDULE

100 SD	5/11/22
50 DD	7/15/22
100 DD	9/16/22
PRICING SET	11/11/22
PERMIT SET	12/09/22

REVISION SCHEDULE

NO.	ISSUE	DATE

JOB NUMBER:	2049-008
DRAWN BY:	TH
CHECKED BY:	AF
ISSUE DATE:	12/09/2022
SCALE:	

TITLE: **LOAD CALCULATIONS**

SHEET: **E5.03**

PRELIMINARY - Not for Construction -

© 2019 PYATOK ARCHITECTURE & URBAN DESIGN

4/22/2022 6:28:22 PM

COPYRIGHT 2022, EMERALD CITY ENGINEERS, INC.
T:\TH\H DRIVE\2049-008 2700 INTERNATIONAL, OAKLAND, CA\DWG\E503 LOAD CALCULATIONS.DWG 11-28-2022 15:29

Apt. Service Load - Optional Calculation - MDPA

UNITS MUST HAVE ELECTRIC COOKING *AND* ELEC SPACE HEATING/COOLING

Job Number:	**2049-008**	**Run By:**	**TH**	Printed :
Job Name:	**3700 International**			09/09/22
Location:	**Oakland, CA**			12:44 PM

Apartment Load

	STUDIO	1BED	2BED	3BED	2BED MANG		
enter number of apts	0	35	20	19	1	0	0
total demand load per unit (kVA)	19.6	20.6	22.0	22.9	28.5	28.7	28.7
unit demand times # of units	0.0	721.7	439.0	434.2	28.5	0.0	0.0
undiversified load (kVA)	1623.3						
total number of apartments	75						
demand factor (%) (table 220 - 84)	23%						

General Demand Load for all apartments (kVA): 373
(AMPS @ 208v 3-phase): 1036

Apt. Service Load - Optional Calculation - MDPB

UNITS MUST HAVE ELECTRIC COOKING *AND* ELEC SPACE HEATING/COOLING

Job Number:		**Run By:**	**TH**	Printed :
Job Name:				05/05/22
Location:				12:14 PM

Apartment Load

	STUDIO	1BED	2BED	3BED			
enter number of apts.	0	0	0	0	0	0	0
total demand load per unit (kVA)	19.7	28.3	31.9	35.1	28.7	28.7	28.7
unit demand times # of units	0.0	0.0	0.0	0.0	0.0	0.0	0.0
undiversified load (kVA)	0.0						
total number of apartments	0						
demand factor (%) (table 220 - 84)	100%						

General Demand Load for all apartments (kVA): 0
(AMPS @ 208v 3-phase): 0

House Load

Non-continuous misc. house loads (elevators, vending, etc.) (kVA): misc fans 5

	Misc	10	elevator x 2	20
	trash	10	garage exhaust	20
** CENTRAL SYSTEM ESTIMATED AT 1.16 KW/UNIT **	HP Water Heaters	87	fire pump	30
** REBDRC ELEC H20 HBA T A T 0.567KW/UNIT **	HP Water Heaters	43	Commercial x 5	324
	common area HPHW	20	amenity space	30
			common HVAC	80
Largest Motor	enter 25% of largest	7.5	corridor HVAC	10

" non restaurants

(kVA): 727

Continuous House loads (pool equipment, etc.) (kVA): EV X 7 46.2 — 32 stalls @ 20%

Lighting	15	Washers x 10	15

Enter House Lighting above. (if unknown, estimate at 2 VA/ft^2)(220 - 12) House sq. footage: 0 — 0.0 (kVA): 95

Receptacles (total # counted) (220 - 14): 115 — first 10 kVA at 100%: 15
Receptacles at 180 VA each (220 - 14) (kVA): 20.7 — remainder at 50%

Commercial Kitchen Equipment (220 - 56): # of thermostat controlled or intermittent use units: 0
load for this equipment (kVA):
demand factor: 100% (kVA): 0

HVAC (House) (larger of heat or cool) (220 - 82): enter known >> 0.5 — 1

House Range Load: Wattage 8.1; number of ranges 1 (kVA): 8

House Dryer Load, table 220-54: number of 5 kW House dryers 10 (kVA): 50

House Demand Load Total (kVA): 896

Three Phase Service

Three Phase Load at Meter Bank — Meter Bank Load (kVA): 0

Three Phase Load at Meter Bank — Meter Bank Load (A): 0

Three Phase Main Service — 208/120 - 3 — Total Three Phase Demand Load (kVA): 896

Service Size (A): 2486

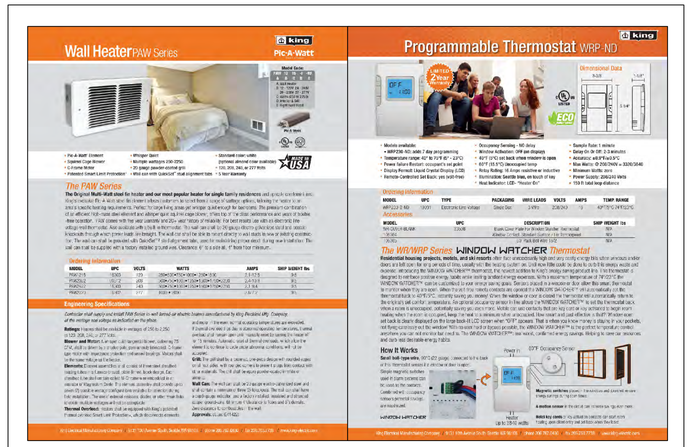

PROVIDE PROGRAMMABLE THERMOSTAT WITH HVAC SMART SWITCH INTEGRATED INTO UNIT WINDOWS TO DETECT WHEN OPEN AND TO CONTROL THE THERMOSTAT IN THE UNIT.

IN–UNIT THERMOSTAT AND WALL HEATER (1)

2700 INTERNATIONAL
22,000 AIC, MLO — 208Y/120V 2P 3W — FLUSH MOUNTING — 125 AMP BUS
UNIT TYPE 1–BED (TYPE A)

CIRCUIT #	BKR SIZE	DESCRIPTION	CIRCUIT #	BKR SIZE	DESCRIPTION
1	40/2	STOVE	2	–	SPACE
3	|		4	–	SPACE
5	20/1	AFCI/GFCI MICRO/HOOD	6	–	SPACE
7	20/1	AFCI/GFCI DISHWASHER	8	15/1	AFCI BEDROOM RECEP, LIGHTING
9	20/1	AFCI/GFCI DISPOSAL	10	15/1	AFCI LIVING ROOM RECEP, LIGHTING, SMOKE DETECTOR
11	20/1	AFCI/GFCI KITCHEN RECEP., DINING	12	20/2	HPAC–1 <1>
13	20/1	AFCI/GFCI KITCHEN RECEP, REFRIG.	14	|	
15	15/1	AFCI SF–1 DAMPER	16	20/2	BEDROOM HEATER <2>
17	20/1	BATHROOM RECEP, FAN, LIGHTING	18	|	
19	–	SPACE	20	–	SPACE
21	–	SPACE	22	–	SPACE
23	–	SPACE	24	–	SPACE

2700 INTERNATIONAL
22,000 AIC, MLO — 208Y/120V 2P 3W — FLUSH MOUNTING — 125 AMP BUS
UNIT TYPE 2–BED (TYPE B)

CIRCUIT #	BKR SIZE	DESCRIPTION	CIRCUIT #	BKR SIZE	DESCRIPTION
1	40/2	STOVE	2	–	SPACE
3	|		4	–	SPACE
5	20/1	AFCI/GFCI MICRO/HOOD	6	15/1	AFCI BEDROOM RECEP, LIGHTING
7	20/1	AFCI/GFCI DISHWASHER	8	15/1	AFCI BEDROOM RECEP, LIGHTING
9	20/1	AFCI/GFCI DISPOSAL	10	15/1	AFCI LIVING ROOM RECEP, LIGHTING, SMOKE DETECTOR
11	20/1	AFCI/GFCI KITCHEN RECEP., DINING	12	20/2	HPAC–1 <1>
13	20/1	AFCI/GFCI KITCHEN RECEP, REFRIG.	14	|	
15	15/1	AFCI SF–1 DAMPER	16	20/2	BEDROOM HEATER <2>
17	20/1	BATHROOM RECEP, FAN, LIGHTING	18	|	
19	–	SPACE	20	20/2	BEDROOM HEATER <2>
21	–	SPACE	22	|	
23	–	SPACE	24	15/1	AFCI LIVING ROOM RECEP, LIGHTING

2700 INTERNATIONAL
22,000 AIC, MLO — 208Y/120V 2P 3W — FLUSH MOUNTING — 125 AMP BUS
UNIT TYPE 3–BED (TYPE C)

CIRCUIT #	BKR SIZE	DESCRIPTION	CIRCUIT #	BKR SIZE	DESCRIPTION
1	40/2	STOVE	2	–	SPACE
3	|		4	15/1	AFCI BEDROOM RECEP, LIGHTING
5	20/1	AFCI/GFCI MICRO/HOOD	6	15/1	AFCI BEDROOM RECEP, LIGHTING
7	20/1	AFCI/GFCI DISHWASHER	8	15/1	AFCI BEDROOM RECEP, LIGHTING
9	20/1	AFCI/GFCI DISPOSAL	10	15/1	AFCI LIVING ROOM RECEP, LIGHTING, SMOKE DETECTOR
11	20/1	AFCI/GFCI KITCHEN RECEP., DINING	12	20/2	HPAC–1 <1>
13	20/1	AFCI/GFCI KITCHEN RECEP, REFRIG.	14	|	
15	15/1	AFCI SF–1 DAMPER	16	20/2	BEDROOM HEATER <2>
17	20/1	BATHROOM RECEP, FAN, LIGHTING	18	|	
19	20/1	BATHROOM RECEP, FAN, LIGHTING	20	20/2	BEDROOM HEATER <2>
21	20/2	BEDROOM HEATER <2>	22	|	
23	|		24	15/1	AFCI LIVING ROOM RECEP, LIGHTING

2700 INTERNATIONAL
22,000 AIC, MLO — 208Y/120V 2P 3W — FLUSH MOUNTING — 125 AMP BUS
UNIT TYPE 2–BED (TYPE B) MANAGER'S UNIT

CIRCUIT #	BKR SIZE	DESCRIPTION	CIRCUIT #	BKR SIZE	DESCRIPTION
1	40/2	STOVE	2	30/2	DRYER
3	|		4	|	
5	20/1	AFCI/GFCI MICRO/HOOD	6	15/1	AFCI BEDROOM RECEP, LIGHTING
7	20/1	AFCI/GFCI DISHWASHER	8	15/1	AFCI BEDROOM RECEP, LIGHTING
9	20/1	AFCI/GFCI DISPOSAL	10	15/1	AFCI LIVING ROOM RECEP, LIGHTING, SMOKE DETECTOR
11	20/1	AFCI/GFCI KITCHEN RECEP., DINING	12	20/2	HPAC–1 <1>
13	20/1	AFCI/GFCI KITCHEN RECEP, REFRIG.	14	|	
15	15/1	AFCI SF–1 DAMPER	16	20/2	BEDROOM HEATER <2>
17	20/1	BATHROOM RECEP, FAN, LIGHTING	18	|	
19	20/1	AFCI/GFCI WASHER	20	20/2	BEDROOM HEATER <2>
21	–	SPACE	22	|	
23	–	SPACE	24	15/1	AFCI LIVING ROOM RECEP, LIGHTING

APT PANEL SCHEDULE SHEET NOTES	APT PANEL SCHEDULE FLAG NOTES
1. PANEL SIZE IS MINIMUM REQUIRED BY CODE. LARGER PANELS MAY BE REQUIRED TO ACCOMMODATE FEEDER. CONTRACTOR TO COORDINATE W/ SUPPLIER.	<1> CONFIRM BREAKER SIZE WITH HVAC SUBMITTAL PRIOR TO PURCHASE. <2> PROVIDE LOCKABLE BREAKERS.

COPYRIGHT 2022, EMERALD CITY ENGINEERS, INC.
4/22/2022 6:28:22 PM
THUYNH J:\2049-008 2700 INTERNATIONAL, OAKLAND, CA\DWG\E504 LOAD CALCULATIONS.DWG 11-29-2022 15:29

PYATOK
1611 TELEGRAPH AVE.
SUITE 200
OAKLAND, CA 94612
T. 510.465.7010 | F. 510.465.8575
www.pyatok.com

THE UNITY COUNCIL
1900 FRUITVALE
AVE
#2A
OAKLAND, CA
94601

EMERALD CITY
ENGINEERS, INC
21705 Highway 99 Lynnwood, WA
98036 425-741-1200 tel / 1201 fax

2700 INTERNATIONAL
OAKLAND, CA 94601

STAMP:
REGISTERED PROFESSIONAL ENGINEER — TOM C. FRENCH — E19427 — EXP. 3-31-23 — ELECTRICAL — STATE OF CALIFORNIA
12-09-22

ISSUE SCHEDULE

100 SD	5/11/22
50 DD	7/15/22
100 DD	9/16/22
PRICING SET	11/11/22
PERMIT SET	12/09/22

REVISION SCHEDULE

NO.	ISSUE	DATE

JOB NUMBER:	2049-008
DRAWN BY:	TH
CHECKED BY:	AF
ISSUE DATE:	12/09/2022
SCALE:	
TITLE:	**LOAD CALCULATIONS**

SHEET:
E5.04

PRELIMINARY - Not for Construction -

© 2019 PYATOK ARCHITECTURE & URBAN DESIGN

Panel E1

Panel E1	Room	Volts 208Y/120V 3P 4W	AIC 22,000
	Mounting SURFACE	Bus Amps 100	Main Bkr 100
	Fed from INV	Neutral 100%	Lugs FEEDTHRU
	Note:		

CKT #	CKT BKR	LOAD KVA	CIRCUIT DESCRIPTION		CKT #	CKT BKR	LOAD KVA	CIRCUIT DESCRIPTION
1	20/1	0.132	LIGHTING	a	2	20/1	0	SPARE
3	20/1	0.359	LIGHTING	b	4	20/1	0	SPARE
5	20/1	0.12	LIGHTING	c	6	20/1	0	SPARE
7	20/1	0.506	LIGHTING	a	8	20/1	0	SPARE
9	20/1	0.38	LIGHTING	b	10	20/1	0	SPARE
11	20/1	0	SPARE	c	12	20/1	0	SPARE
13	20/1	0	SPARE	a	14	20/1	0	SPARE
15	20/1	0	SPARE	b	16	20/1	0	SPARE
17	20/1	0	SPARE	c	18	20/1	0	SPARE
19	20/1	0	SPARE	a	20	20/1	0	SPARE
21	20/1	0	SPARE	b	22	20/1	0	SPARE
23	20/1	0	SPARE	c	24	20/1	0	SPARE
25	20/1	0	SPARE	a	26	20/1	0	SPARE
27	20/1	0	SPARE	b	28	20/1	0	SPARE
29	20/1	0	SPARE	c	30	20/1	0	SPARE
31	20/1	0	SPARE	a	32	20/1	0	SPARE
33	20/1	0	SPARE	b	34	20/1	0	SPARE
35	20/1	0	SPARE	c	36	20/1	0	SPARE
37	20/1	0	SPARE	a	38	20/1	0	SPARE
39	20/1	0	SPARE	b	40	20/1	0	SPARE
41	20/1	0	SPARE	c	42	20/1	0	SPARE

LUG LOAD: 1.53 KVA PANEL E2

	CONN. KVA	CALC. KVA			CONN. KVA	CALC. KVA	
LIGHTING	3.03	3.78	(125%)	CONTINUOUS	0	0	(125%)
LARGEST MOTOR	0	0	(125%)	HEATING	0	0	(100%)
OTHER MOTORS	0	0	(100%)	NONCONTINUOUS	0	0	(100%)
RECEPTACLES	0	0	(50%>10)	KITCHEN EQUIP	0	0	(N/A)
METERBANK	0	0	(23%)	NONCOIN/DIVERSE	0	0	(N/A)
GST ROOMS	0	0	(50%)	TOTAL KVA	3.03	3.78	

BALANCED THREE PHASE AMPS 10.5

PHASE BALANCE PERCENT: PHASE A 123% PHASE B 137% PHASE C 39.7%

Panel E2

Panel E2	Room	Volts 208Y/120V 3P 4W	AIC 22,000
	Mounting SURFACE	Bus Amps 100	Main Bkr MLO
	Fed from E1	Neutral 100%	Lugs FEEDTHRU
	Note:		

CKT #	CKT BKR	LOAD KVA	CIRCUIT DESCRIPTION		CKT #	CKT BKR	LOAD KVA	CIRCUIT DESCRIPTION
1	20/1	0.07	LIGHTING	a	2	20/1	0	SPARE
3	20/1	0.174	LIGHTING	b	4	20/1	0	SPARE
5	20/1	0.07	LIGHTING	c	6	20/1	0	SPARE
7	20/1	0.16	LIGHTING	a	8	20/1	0	SPARE
9	20/1	0.07	LIGHTING	b	10	20/1	0	SPARE
11	20/1	0.15	LIGHTING	c	12	20/1	0	SPARE
13	20/1	0.162	LIGHTING	a	14	20/1	0	SPARE
15	20/1	0	SPARE	b	16	20/1	0	SPARE
17	20/1	0	SPARE	c	18	20/1	0	SPARE
19	20/1	0	SPARE	a	20	20/1	0	SPARE
21	20/1	0	SPARE	b	22	20/1	0	SPARE
23	20/1	0	SPARE	c	24	20/1	0	SPARE
25	20/1	0	SPARE	a	26	20/1	0	SPARE
27	20/1	0	SPARE	b	28	20/1	0	SPARE
29	20/1	0	SPARE	c	30	20/1	0	SPARE
31	20/1	0	SPARE	a	32	20/1	0	SPARE
33	20/1	0	SPARE	b	34	20/1	0	SPARE
35	20/1	0	SPARE	c	36	20/1	0	SPARE
37	20/1	0	SPARE	a	38	20/1	0	SPARE
39	20/1	0	SPARE	b	40	20/1	0	SPARE
41	20/1	0	SPARE	c	42	20/1	0	SPARE

LUG LOAD: 0.672 KVA PANEL E5

	CONN. KVA	CALC. KVA			CONN. KVA	CALC. KVA	
LIGHTING	1.53	1.91	(125%)	CONTINUOUS	0	0	(125%)
LARGEST MOTOR	0	0	(125%)	HEATING	0	0	(100%)
OTHER MOTORS	0	0	(100%)	NONCONTINUOUS	0	0	(100%)
RECEPTACLES	0	0	(50%>10)	KITCHEN EQUIP	0	0	(N/A)
METERBANK	0	0	(23%)	NONCOIN/DIVERSE	0	0	(N/A)
GST ROOMS	0	0	(50%)	TOTAL KVA	1.53	1.91	

BALANCED THREE PHASE AMPS 5.3

PHASE BALANCE PERCENT: PHASE A 118% PHASE B 127% PHASE C 55%

Panel E5

Panel E5	Room	Volts 208Y/120V 3P 4W	AIC 22,000
	Mounting SURFACE	Bus Amps 100	Main Bkr MLO
	Fed from E2	Neutral 100%	Lugs STANDARD
	Note:		

CKT #	CKT BKR	LOAD KVA	CIRCUIT DESCRIPTION		CKT #	CKT BKR	LOAD KVA	CIRCUIT DESCRIPTION
1	20/1	0.06	LIGHTING	a	2	20/1	0	SPARE
3	20/1	0.15	LIGHTING	b	4	20/1	0	SPARE
5	20/1	0.06	LIGHTING	c	6	20/1	0	SPARE
7	20/1	0.15	LIGHTING	a	8	20/1	0	SPARE
9	20/1	0.252	LIGHTING	b	10	20/1	0	SPARE
11	20/1	0	SPARE	c	12	20/1	0	SPARE
13	20/1	0	SPARE	a	14	20/1	0	SPARE
15	20/1	0	SPARE	b	16	20/1	0	SPARE
17	20/1	0	SPARE	c	18	20/1	0	SPARE
19	20/1	0	SPARE	a	20	20/1	0	SPARE
21	20/1	0	SPARE	b	22	20/1	0	SPARE
23	20/1	0	SPARE	c	24	20/1	0	SPARE
25	20/1	0	SPARE	a	26	20/1	0	SPARE
27	20/1	0	SPARE	b	28	20/1	0	SPARE
29	20/1	0	SPARE	c	30	20/1	0	SPARE
31	20/1	0	SPARE	a	32	20/1	0	SPARE
33	20/1	0	SPARE	b	34	20/1	0	SPARE
35	20/1	0	SPARE	c	36	20/1	0	SPARE
37	20/1	0	SPARE	a	38	20/1	0	SPARE
39	20/1	0	SPARE	b	40	20/1	0	SPARE
41	20/1	0	SPARE	c	42	20/1	0	SPARE

	CONN. KVA	CALC. KVA			CONN. KVA	CALC. KVA	
LIGHTING	0.672	0.84	(125%)	CONTINUOUS	0	0	(125%)
LARGEST MOTOR	0	0	(125%)	HEATING	0	0	(100%)
OTHER MOTORS	0	0	(100%)	NONCONTINUOUS	0	0	(100%)
RECEPTACLES	0	0	(50%>10)	KITCHEN EQUIP	0	0	(N/A)
METERBANK	0	0	(23%)	NONCOIN/DIVERSE	0	0	(N/A)
GST ROOMS	0	0	(50%)	TOTAL KVA	0.672	0.84	

BALANCED THREE PHASE AMPS 2.33

PHASE BALANCE PERCENT: PHASE A 93.7% PHASE B 179% PHASE C 26.8%

Panel EV

Panel EV	Room	Volts 208Y/120V 3P 4W	AIC 42,000
	Mounting SURFACE	Bus Amps 400	Main Bkr MLO
	Fed from MDPB	Neutral 100%	Lugs STANDARD
	Note:		

CKT #	CKT BKR	LOAD KVA	CIRCUIT DESCRIPTION		CKT #	CKT BKR	LOAD KVA	CIRCUIT DESCRIPTION
1	40/2	6.8	EV CHARGER	a	2	20/1	0	SPARE
3	|			b	4	20/1	0	SPARE
5	40/2	6.8	EV CHARGER	c	6	20/1	0	SPARE
7	|			a	8	20/1	0	SPARE
9	40/2	6.8	EV CHARGER	b	10	20/1	0	SPARE
11	|			c	12	20/1	0	SPARE
13	40/2	6.8	EV CHARGER	a	14	20/1	0	SPARE
15	|			b	16	20/1	0	SPARE
17	40/2	6.8	EV CHARGER	c	18	20/1	0	SPARE
19	|			a	20	20/1	0	SPARE
21	40/2	6.8	EV CHARGER	b	22	20/1	0	SPARE
23	|			c	24	20/1	0	SPARE
25	20/1	0	SPARE	a	26	20/1	0	SPARE
27	20/1	0	SPARE	b	28	20/1	0	SPARE
29	20/1	0	SPARE	c	30	20/1	0	SPARE
31	20/1	0	SPARE	a	32	20/1	0	SPARE
33	20/1	0	SPARE	b	34	20/1	0	SPARE
35	20/1	0	SPARE	c	36	20/1	0	SPARE
37	20/1	0	SPARE	a	38	20/1	0	SPARE
39	20/1	0	SPARE	b	40	20/1	0	SPARE
41	20/1	0	SPARE	c	42	20/1	0	SPARE

	CONN. KVA	CALC. KVA			CONN. KVA	CALC. KVA	
LIGHTING	0	0	(125%)	CONTINUOUS	40.8	51	(125%)
LARGEST MOTOR	0	0	(125%)	HEATING	0	0	(100%)
OTHER MOTORS	0	0	(100%)	NONCONTINUOUS	0	0	(100%)
RECEPTACLES	0	0	(50%>10)	KITCHEN EQUIP	0	0	(N/A)
METERBANK	0	0	(23%)	NONCOIN/DIVERSE	0	0	(N/A)
GST ROOMS	0	0	(50%)	TOTAL KVA	40.8	51	

BALANCED THREE PHASE AMPS 142

PHASE BALANCE PERCENT: PHASE A 100% PHASE B 100% PHASE C 100%

Panel L

Panel L	Room	Volts 208Y/120V 3P 4W	AIC 42,000
	Mounting SURFACE	Bus Amps 400	Main Bkr MLO
	Fed from MDPB	Neutral 100%	Lugs STANDARD
	Note:		

CKT #	CKT BKR	LOAD KVA	CIRCUIT DESCRIPTION		CKT #	CKT BKR	LOAD KVA	CIRCUIT DESCRIPTION
1	20/1	0.54	RECEPTACLE	a	2	30/2	4.8	*GFCI BRKR* DRYER
3	20/1	1.5	*GFCI BRKR* WASHER	b	4	|		
5	30/2	4.8	*GFCI BRKR* DRYER	c	6	20/1	1.5	*GFCI BRKR* WASHER
7	|			a	8	30/2	4.8	*GFCI BRKR* DRYER
9	20/1	1.5	*GFCI BRKR* WASHER	b	10	|		
11	30/2	4.8	*GFCI BRKR* DRYER	c	12	30/2	4.8	*GFCI BRKR* DRYER
13	|			a	14	|		
15	20/1	1.5	*GFCI BRKR* WASHER	b	16	20/1	0	SPARE
17	20/2	0	SPARE	c	18	20/1	0	SPARE
19	|			a	20	20/1	0	SPARE
21	20/1	1.5	*GFCI BRKR* WASHER	b	22	20/1	0	SPARE
23	30/2	4.8	*GFCI BRKR* DRYER	c	24	20/1	0	SPARE
25	|			a	26	20/1	0	SPARE
27	20/1	1.5	*GFCI BRKR* WASHER	b	28	20/1	0	SPARE
29	30/2	4.8	*GFCI BRKR* DRYER	c	30	20/1	0	SPARE
31	|			a	32	20/1	0	SPARE
33	20/1	1.5	*GFCI BRKR* WASHER	b	34	20/1	0	SPARE
35	30/2	4.8	*GFCI BRKR* DRYER	c	36	20/1	0	SPARE
37	|			a	38	20/1	0	SPARE
39	20/1	1.5	*GFCI BRKR* WASHER	b	40	20/1	0	SPARE
41	20/1	0	SPARE	c	42	20/1	0	SPARE

	CONN. KVA	CALC. KVA			CONN. KVA	CALC. KVA	
LIGHTING	0	0	(125%)	CONTINUOUS	0	0	(125%)
LARGEST MOTOR	4.8	6	(125%)	HEATING	0	0	(100%)
OTHER MOTORS	33.6	33.6	(100%)	NONCONTINUOUS	12	12	(100%)
RECEPTACLES	0.54	0.54	(50%>10)	KITCHEN EQUIP	0	0	(N/A)
METERBANK	0	0	(23%)	NONCOIN/DIVERSE	0	0	(N/A)
GST ROOMS	0	0	(50%)	TOTAL KVA	50.9	52.1	

BALANCED THREE PHASE AMPS 145

PHASE BALANCE PERCENT: PHASE A 114% PHASE B 86.4% PHASE C 99.7%

Panel L1

Panel L1	Room	Volts 208Y/120V 3P 4W	AIC 22,000
	Mounting SURFACE	Bus Amps 100	Main Bkr MLO
	Fed from MDPB	Neutral 100%	Lugs STANDARD
	Note:		

CKT #	CKT BKR	LOAD KVA	CIRCUIT DESCRIPTION		CKT #	CKT BKR	LOAD KVA	CIRCUIT DESCRIPTION
1	20/1	0.084	LIGHTING	a	2	20/1	0.165	LIGHTING
3	20/1	0.084	LIGHTING	b	4	20/1	1.2	SIGNAGE
5	20/1	0	SPARE	c	6	20/1	0.103	LIGHTING
7	20/1	0	SPARE	a	8	20/1	0.2	LIGHTING
9	20/1	0.429	LIGHTING	b	10	20/1	0.193	LIGHTING
11	20/1	0.557	LIGHTING	c	12	20/1	0.1	LIGHTING
13	20/1	0.396	LIGHTING	a	14	20/1	0.11	LIGHTING
15	20/1	0.255	LIGHTING	b	16	20/1	0	SPARE
17	20/1	0.32	LIGHTING	c	18	20/1	0	SPARE
19	20/1	0.066	LIGHTING	a	20	20/1	0	SPARE
21	20/1	0.066	LIGHTING	b	22	20/1	0	SPARE
23	20/1	0.5	CAR LIGHTS	c	24	20/1	0	SPARE
25	20/1	0.5	CAR LIGHTS	a	26	20/1	0	SPARE
27	20/1	1.2	SIGNAGE	b	28	20/1	0	SPARE
29	20/1	0.285	LIGHTING	c	30	20/1	0	SPARE
31	20/1	0.278	LIGHTING	a	32	20/1	0	SPARE
33	20/1	0.448	LIGHTING	b	34	20/1	0	SPARE
35	20/1	0.646	LIGHTING	c	36	20/1	0	SPARE
37	20/1	0.184	LIGHTING	a	38	20/1	0	SPARE
39	20/1	0.231	LIGHTING	b	40	20/1	0	SPARE
41	20/1	0.26	LIGHTING	c	42	20/1	0	SPARE

	CONN. KVA	CALC. KVA			CONN. KVA	CALC. KVA	
LIGHTING	8.86	11.1	(125%)	CONTINUOUS	0	0	(125%)
LARGEST MOTOR	0	0	(125%)	HEATING	0	0	(100%)
OTHER MOTORS	0	0	(100%)	NONCONTINUOUS	0	0	(100%)
RECEPTACLES	0	0	(50%>10)	KITCHEN EQUIP	0	0	(N/A)
METERBANK	0	0	(23%)	NONCOIN/DIVERSE	0	0	(N/A)
GST ROOMS	0	0	(50%)	TOTAL KVA	8.86	11.1	

BALANCED THREE PHASE AMPS 30.7

PHASE BALANCE PERCENT: PHASE A 67.1% PHASE B 139% PHASE C 93.8%

Panel L2

Panel L2	Room	Volts 208Y/120V 3P 4W	AIC 22,000
	Mounting SURFACE	Bus Amps 100	Main Bkr MLO
	Fed from MDPB	Neutral 100%	Lugs FEEDTHRU
	Note:		

CKT #	CKT BKR	LOAD KVA	CIRCUIT DESCRIPTION		CKT #	CKT BKR	LOAD KVA	CIRCUIT DESCRIPTION
1	20/1	0.066	LIGHTING	a	2	20/1	0	SPARE
3	20/1	0.099	LIGHTING	b	4	20/1	0	SPARE
5	20/1	0.099	LIGHTING	c	6	20/1	0	SPARE
7	20/1	0.155	LIGHTING	a	8	20/1	0	SPARE
9	20/1	0.21	LIGHTING	b	10	20/1	0	SPARE
11	20/1	0.159	LIGHTING	c	12	20/1	0	SPARE
13	20/1	0.24	LIGHTING	a	14	20/1	0	SPARE
15	20/1	0.159	LIGHTING	b	16	20/1	0	SPARE
17	20/1	0.204	LIGHTING	c	18	20/1	0	SPARE
19	20/1	0	SPARE	a	20	20/1	0	SPARE
21	20/1	0	SPARE	b	22	20/1	0	SPARE
23	20/1	0	SPARE	c	24	20/1	0	SPARE
25	20/1	0	SPARE	a	26	20/1	0	SPARE
27	20/1	0	SPARE	b	28	20/1	0	SPARE
29	20/1	0	SPARE	c	30	20/1	0	SPARE
31	20/1	0	SPARE	a	32	20/1	0	SPARE
33	20/1	0	SPARE	b	34	20/1	0	SPARE
35	20/1	0	SPARE	c	36	20/1	0	SPARE
37	20/1	0	SPARE	a	38	20/1	0	SPARE
39	20/1	0	SPARE	b	40	20/1	0	SPARE
41	20/1	0	SPARE	c	42	20/1	0	SPARE

LUG LOAD: 1.12 KVA PANEL L5

	CONN. KVA	CALC. KVA			CONN. KVA	CALC. KVA	
LIGHTING	2.51	3.13	(125%)	CONTINUOUS	0	0	(125%)
LARGEST MOTOR	0	0	(125%)	HEATING	0	0	(100%)
OTHER MOTORS	0	0	(100%)	NONCONTINUOUS	0	0	(100%)
RECEPTACLES	0	0	(50%>10)	KITCHEN EQUIP	0	0	(N/A)
METERBANK	0	0	(23%)	NONCOIN/DIVERSE	0	0	(N/A)
GST ROOMS	0	0	(50%)	TOTAL KVA	2.51	3.13	

BALANCED THREE PHASE AMPS 8.7

PHASE BALANCE PERCENT: PHASE A 107% PHASE B 95.3% PHASE C 97.2%

Panel L5

Panel L5	Room	Volts 208Y/120V 3P 4W	AIC 22,000
	Mounting SURFACE	Bus Amps 100	Main Bkr MLO
	Fed from L2	Neutral 100%	Lugs STANDARD
	Note:		

CKT #	CKT BKR	LOAD KVA	CIRCUIT DESCRIPTION		CKT #	CKT BKR	LOAD KVA	CIRCUIT DESCRIPTION
1	20/1	0.084	LIGHTING	a	2	20/1	0	SPARE
3	20/1	0.084	LIGHTING	b	4	20/1	0	SPARE
5	20/1	0	SPARE	c	6	20/1	0	SPARE
7	20/1	0.132	LIGHTING	a	8	20/1	0	SPARE
9	20/1	0.099	LIGHTING	b	10	20/1	0	SPARE
11	20/1	0.146	LIGHTING	c	12	20/1	0	SPARE
13	20/1	0.204	LIGHTING	a	14	20/1	0	SPARE
15	20/1	0.146	LIGHTING	b	16	20/1	0	SPARE
17	20/1	0.204	LIGHTING	c	18	20/1	0	SPARE
19	20/1	0.017	LIGHTING	a	20	20/1	0	SPARE
21	20/1	0	SPARE	b	22	20/1	0	SPARE
23	20/1	0	SPARE	c	24	20/1	0	SPARE
25	20/1	0	SPARE	a	26	20/1	0	SPARE
27	20/1	0	SPARE	b	28	20/1	0	SPARE
29	20/1	0	SPARE	c	30	20/1	0	SPARE
31	20/1	0	SPARE	a	32	20/1	0	SPARE
33	20/1	0	SPARE	b	34	20/1	0	SPARE
35	20/1	0	SPARE	c	36	20/1	0	SPARE
37	20/1	0	SPARE	a	38	20/1	0	SPARE
39	20/1	0	SPARE	b	40	20/1	0	SPARE
41	20/1	0	SPARE	c	42	20/1	0	SPARE

	CONN. KVA	CALC. KVA			CONN. KVA	CALC. KVA	
LIGHTING	1.12	1.4	(125%)	CONTINUOUS	0	0	(125%)
LARGEST MOTOR	0	0	(125%)	HEATING	0	0	(100%)
OTHER MOTORS	0	0	(100%)	NONCONTINUOUS	0	0	(100%)
RECEPTACLES	0	0	(50%>10)	KITCHEN EQUIP	0	0	(N/A)
METERBANK	0	0	(23%)	NONCOIN/DIVERSE	0	0	(N/A)
GST ROOMS	0	0	(50%)	TOTAL KVA	1.12	1.4	

BALANCED THREE PHASE AMPS 3.87

PHASE BALANCE PERCENT: PHASE A 117% PHASE B 88.4% PHASE C 94.1%

Panel M1

Panel M1	Room	Volts 208Y/120V 3P 4W	AIC 42,000
	Mounting SURFACE	Bus Amps 250	Main Bkr MLO
	Fed from MDPB	Neutral 100%	Lugs STANDARD
	Note:		

CKT #	CKT BKR	LOAD KVA	CIRCUIT DESCRIPTION		CKT #	CKT BKR	LOAD KVA	CIRCUIT DESCRIPTION
1	20/1	0.25	CAR FAN	a	2	20/2	2.45	HP-7
3	20/1	0.25	CAR FAN	b	4	|		
5	20/1	0.3	FSD	c	6	20/1	0.2	FSD
7	20/1	0.1	EF-7A	a	8	20/3	2.83	GEF-1
9	20/1	0.468	EF-4	b	10	|		
11	20/1	1.18	EF-6	c	12	|		
13	60/2	10.5	FCU-1	a	14	20/2	0.1	SF-6
15	|			b	16	|		
17	60/2	10.5	FCU-2	c	18	20/2	0.1	SF-7
19	|			a	20	|		
21	20/2	3.95	FCU-7	b	22	20/2	0.1	SF-8
23	|			c	24	|		
25	20/2	3.95	FCU-6	a	26	20/1	0	SPARE
27	|			b	28	20/1	0	SPARE
29	20/1	0.1	EF-8	c	30	20/1	0	SPARE
31	60/2	10.5	FCU-3	a	32	20/1	0	SPARE
33	|			b	34	20/1	0	SPARE
35	20/1	0.1	EF-7B	c	36	20/1	0	SPARE
37	25/2	3.84	FCU-5, HP-5	a	38	20/1	0	SPARE
39	|			b	40	20/1	0	SPARE
41	20/1	0.696	EF-5	c	42	20/1	0	SPARE

	CONN. KVA	CALC. KVA			CONN. KVA	CALC. KVA	
LIGHTING	0	0	(125%)	CONTINUOUS	0	0	(125%)
LARGEST MOTOR	2.83	3.53	(125%)	HEATING	45.7	45.7	(100%)
OTHER MOTORS	3.44	3.44	(100%)	NONCONTINUOUS	0.5	0.5	(100%)
RECEPTACLES	0	0	(50%>10)	KITCHEN EQUIP	0	0	(N/A)
METERBANK	0	0	(23%)	NONCOIN/DIVERSE	0	0	(N/A)
GST ROOMS	0	0	(50%)	TOTAL KVA	52.4	53.1	

BALANCED THREE PHASE AMPS 147

PHASE BALANCE PERCENT: PHASE A 126% PHASE B 114% PHASE C 60.1%

Panel M2

Panel M2	Room	Volts 208Y/120V 3P 4W	AIC 22,000
	Mounting SURFACE	Bus Amps 250	Main Bkr MLO
	Fed from MDPB	Neutral 100%	Lugs FEEDTHRU
	Note:		

CKT #	CKT BKR	LOAD KVA	CIRCUIT DESCRIPTION		CKT #	CKT BKR	LOAD KVA	CIRCUIT DESCRIPTION
1	20/1	0.15	FSD	a	2	20/1	0	SPARE
3	20/1	0.3	FSD	b	4	20/1	0	SPARE
5	20/1	0.3	FSD	c	6	20/1	0	SPARE
7	20/1	0	SPARE	a	8	20/1	0	SPARE
9	20/1	0	SPARE	b	10	20/1	0	SPARE
11	20/1	0	SPARE	c	12	20/1	0	SPARE
13	20/1	0	SPARE	a	14	20/1	0	SPARE
15	20/1	0	SPARE	b	16	20/1	0	SPARE
17	20/1	0	SPARE	c	18	20/1	0	SPARE
19	20/1	0	SPARE	a	20	20/1	0	SPARE
21	20/1	0	SPARE	b	22	20/1	0	SPARE
23	20/1	0	SPARE	c	24	20/1	0	SPARE
25	20/1	0	SPARE	a	26	20/1	0	SPARE
27	20/1	0	SPARE	b	28	20/1	0	SPARE
29	20/1	0	SPARE	c	30	20/1	0	SPARE
31	20/1	0	SPARE	a	32	20/1	0	SPARE
33	20/1	0	SPARE	b	34	20/1	0	SPARE
35	20/1	0	SPARE	c	36	20/1	0	SPARE
37	20/1	0	SPARE	a	38	20/1	0	SPARE
39	20/1	0	SPARE	b	40	20/1	0	SPARE
41	20/1	0	SPARE	c	42	20/1	0	SPARE

LUG LOAD: 29.1 KVA PANEL M5

	CONN. KVA	CALC. KVA			CONN. KVA	CALC. KVA	
LIGHTING	0	0	(125%)	CONTINUOUS	0	0	(125%)
LARGEST MOTOR	1.33	1.66	(125%)	HEATING	22.6	22.6	(100%)
OTHER MOTORS	4.55	4.55	(100%)	NONCONTINUOUS	1.35	1.35	(100%)
RECEPTACLES	0	0	(50%>10)	KITCHEN EQUIP	0	0	(N/A)
METERBANK	0	0	(23%)	NONCOIN/DIVERSE	0	0	(N/A)
GST ROOMS	0	0	(50%)	TOTAL KVA	29.9	30.2	

BALANCED THREE PHASE AMPS 83.9

PHASE BALANCE PERCENT: PHASE A 113% PHASE B 94% PHASE C 92.9%

Panel M5

Panel M5	Room	Volts 208Y/120V 3P 4W	AIC 22,000
	Mounting SURFACE	Bus Amps 250	Main Bkr MLO
	Fed from M2	Neutral 100%	Lugs STANDARD
	Note:		

CKT #	CKT BKR	LOAD KVA	CIRCUIT DESCRIPTION		CKT #	CKT BKR	LOAD KVA	CIRCUIT DESCRIPTION
1	20/1	0.3	FSD	a	2	35/2	4.6	HP-3
3	20/1	0.3	FSD	b	4	|		
5	20/3	0.915	SF-4	c	6	30/2	4.26	FCU-4, HP-4
7	|			a	8	|		
9	|			b	10	35/2	4.6	HP-6
11	20/2	0.696	SF-5	c	12	|		
13	|			a	14	20/3	1.33	SF-1
15	20/2	0.696	EF-2	b	16	|		
17	|			c	18	|		
19	35/2	4.6	HP-1	a	20	20/3	0.915	SF-3
21	|			b	22	|		
23	35/2	4.6	HP-2	c	24	|		
25	|			a	26	20/3	1.33	SF-2
27	20/1	0	SPARE	b	28	|		
29	20/1	0	SPARE	c	30	|		
31	20/1	0	SPARE	a	32	20/1	0	SPARE
33	20/1	0	SPARE	b	34	20/1	0	SPARE
35	20/1	0	SPARE	c	36	20/1	0	SPARE
37	20/1	0	SPARE	a	38	20/1	0	SPARE
39	20/1	0	SPARE	b	40	20/1	0	SPARE
41	20/1	0	SPARE	c	42	20/1	0	SPARE

	CONN. KVA	CALC. KVA			CONN. KVA	CALC. KVA	
LIGHTING	0	0	(125%)	CONTINUOUS	0	0	(125%)
LARGEST MOTOR	1.33	1.66	(125%)	HEATING	22.6	22.6	(100%)
OTHER MOTORS	4.55	4.55	(100%)	NONCONTINUOUS	0.6	0.6	(100%)
RECEPTACLES	0	0	(50%>10)	KITCHEN EQUIP	0	0	(N/A)
METERBANK	0	0	(23%)	NONCOIN/DIVERSE	0	0	(N/A)
GST ROOMS	0	0	(50%)	TOTAL KVA	29.1	29.5	

BALANCED THREE PHASE AMPS 81.8

PHASE BALANCE PERCENT: PHASE A 114% PHASE B 93.3% PHASE C 92.2%

Panel P1A

Panel P1A	Room	Volts 208Y/120V 3P 4W	AIC 42,000
	Mounting SURFACE	Bus Amps 250	Main Bkr MLO
	Fed from MDPB	Neutral 100%	Lugs FEEDTHRU
	Note:		

CKT #	CKT BKR	LOAD KVA	CIRCUIT DESCRIPTION		CKT #	CKT BKR	LOAD KVA	CIRCUIT DESCRIPTION
1	20/1	0.36	RECEPTACLE	a	2	20/1	0.36	RECEPTACLE
3	20/1	0.36	RECEPTACLE	b	4	20/1	0.18	RECEPTACLE
5	20/1	0.36	RECEPTACLE	c	6	20/1	0.3	2-WAY COMM
7	20/1	0.36	RECEPTACLE	a	8	20/1	0.36	RECEPTACLE
9	20/1	0.36	RECEPTACLE	b	10	20/1	0.36	RECEPTACLE
11	20/1	1.5	FACP	c	12	20/1	0.18	RECEPTACLE
13	20/1	0.02	EM COMM SYSTEM	a	14	20/1	1	COPIER/FAX
15	20/1	0.02	FF CONTROL PANEL	b	16	20/1	0.36	RECEPTACLE
17	20/1	0.02	FD COMM SYSTEM	c	18	20/1	1.2	*GFCI BRKR* DISPOSAL
19	20/1	1.2	ERRCS	a	20	20/1	1	*GFCI BRKR* REFRIG
21	20/3	2.83	JOCKEY PUMP	b	22	20/1	0.18	RECEPTACLE
23	|			c	24	20/1	0.18	RECEPTACLE
25	|			a	26	20/1	0.72	RECEPTACLE
27	20/1	0.1	*GFCI BRKR* TRASH CHUTE	b	28	20/1	0.72	RECEPTACLE
29	20/1	0.1	*GFCI BRKR* TRASH CHUTE	c	30	20/1	0.54	RECEPTACLE
31	30/3	6.32	COMPACTOR	a	32	20/1	0.72	RECEPTACLE
33	|			b	34	20/1	0	SPARE
35	|			c	36	20/1	0	SPARE
37	30/3	6.32	COMPACTOR	a	38	20/1	0	SPARE
39	|			b	40	20/1	0	SPARE
41	|			c	42	20/1	0	SPARE

LUG LOAD: 27.8 KVA PANEL P1B

	CONN. KVA	CALC. KVA			CONN. KVA	CALC. KVA	
LIGHTING	0	0	(125%)	CONTINUOUS	4.5	5.63	(125%)
LARGEST MOTOR	6.32	7.9	(125%)	HEATING	0	0	(100%)
OTHER MOTORS	17.3	17.3	(100%)	NONCONTINUOUS	4.76	4.76	(100%)
RECEPTACLES	15.4	12.7	(50%>10)	KITCHEN EQUIP	8.1	8.1	(100%)
METERBANK	0	0	(23%)	NONCOIN/DIVERSE	0	0	(N/A)
GST ROOMS	0	0	(50%)	TOTAL KVA	56.3	56.3	

BALANCED THREE PHASE AMPS 156

PHASE BALANCE PERCENT: PHASE A 114% PHASE B 104% PHASE C 82.6%

Panel P1B

Panel P1B	Room	Volts 208Y/120V 3P 4W	AIC 42,000
	Mounting SURFACE	Bus Amps 250	Main Bkr MLO
	Fed from P1A	Neutral 100%	Lugs STANDARD
	Note:		

CKT #	CKT BKR	LOAD KVA	CIRCUIT DESCRIPTION		CKT #	CKT BKR	LOAD KVA	CIRCUIT DESCRIPTION
1	30/2	4.8	*GFCI BRKR* DRYER	a	2	20/1	0.36	RECEPTACLE
3	|			b	4	20/1	0.18	RECEPTACLE
5	20/1	1.5	*GFCI BRKR* WASHER	c	6	20/1	0.18	RECEPTACLE
7	20/1	0.54	RECEPTACLE	a	8	20/1	0.1	ENTRY CALLBOX
9	20/1	0.54	RECEPTACLE	b	10	20/1	0.2	SMOKE GUARD
11	20/1	0.72	RECEPTACLE	c	12	20/1	0.72	RECEPTACLE
13	20/1	0.18	RECEPTACLE	a	14	20/1	0.36	RECEPTACLE
15	20/1	0.36	RECEPTACLE	b	16	20/1	0.9	RECEPTACLE
17	20/1	0.3	*GFCI BRKR* HOOD	c	18	20/1	0.18	RECEPTACLE
19	40/2	8.1	*GFCI BRKR* ELEC STOVE	a	20	20/1	0.1	BBQ IGNITER
21	|			b	22	20/1	0	SPARE
23	20/1	1	*GFCI BRKR* REFRIG	c	24	20/1	0.36	RECEPTACLE
25	20/1	0.36	RECEPTACLE	a	26	20/1	0.5	*GFCI BRKR* IRRIGATION CTRL
27	20/1	0.54	RECEPTACLE	b	28	20/1	0	SPARE
29	20/1	0.54	RECEPTACLE	c	30	20/1	0	SPARE
31	20/1	0.1	FA POWER SUPPLY	a	32	20/1	0	SPARE
33	20/1	1.4	DOOR OPERATOR	b	34	20/1	0	SPARE
35	20/1	0.18	RECEPTACLE	c	36	20/1	0	SPARE
37	20/2	1.92	ROLL-UP GATE	a	38	20/1	0	SPARE
39	|			b	40	20/1	0	SPARE
41	20/1	0.54	RECEPTACLE	c	42	20/1	0	SPARE

	CONN. KVA	CALC. KVA			CONN. KVA	CALC. KVA	
LIGHTING	0	0	(125%)	CONTINUOUS	1.5	1.88	(125%)
LARGEST MOTOR	4.8	6	(125%)	HEATING	0	0	(100%)
OTHER MOTORS	3.32	3.32	(100%)	NONCONTINUOUS	2.3	2.3	(100%)
RECEPTACLES	7.74	7.74	(50%>10)	KITCHEN EQUIP	8.1	8.1	(100%)
METERBANK	0	0	(23%)	NONCOIN/DIVERSE	0	0	(N/A)
GST ROOMS	0	0	(50%)	TOTAL KVA	27.8	29.3	

BALANCED THREE PHASE AMPS 81.4

PHASE BALANCE PERCENT: PHASE A 111% PHASE B 125% PHASE C 63.5%

Panel P2

Panel P2	Room	Volts 208Y/120V 3P 4W	AIC 22,000
	Mounting SURFACE	Bus Amps 250	Main Bkr MLO
	Fed from MDPB	Neutral 100%	Lugs FEEDTHRU
	Note:		

CKT #	CKT BKR	LOAD KVA	CIRCUIT DESCRIPTION		CKT #	CKT BKR	LOAD KVA	CIRCUIT DESCRIPTION
1	20/1	0.72	RECEPTACLE	a	2	20/1	0	SPARE
3	20/1	0.1	FA POWER SUPPLY	b	4	20/1	0	SPARE
5	20/1	0.72	RECEPTACLE	c	6	20/1	0	SPARE
7	20/1	0.1	FA POWER SUPPLY	a	8	20/1	0	SPARE
9	20/1	0.72	RECEPTACLE	b	10	20/1	0	SPARE
11	20/1	0.1	FA POWER SUPPLY	c	12	20/1	0	SPARE
13	20/1	0.72	RECEPTACLE	a	14	20/1	0	SPARE
15	20/1	0.1	FA POWER SUPPLY	b	16	20/1	0	SPARE
17	20/1	0.72	RECEPTACLE	c	18	20/1	0	SPARE
19	20/1	0.1	FA POWER SUPPLY	a	20	20/1	0	SPARE
21	20/1	0.54	RECEPTACLE	b	22	20/1	0	SPARE
23	20/1	0.54	RECEPTACLE	c	24	20/1	0	SPARE
25	20/1	0.54	RECEPTACLE	a	26	20/1	0	SPARE
27	20/1	0.54	RECEPTACLE	b	28	20/1	0	SPARE
29	20/1	0.54	RECEPTACLE	c	30	20/1	0	SPARE
31	20/1	0.2	SMOKE GUARD	a	32	20/1	0	SPARE
33	20/1	0.2	SMOKE GUARD	b	34	20/1	0	SPARE
35	20/1	0	SPARE	c	36	20/1	0	SPARE
37	20/1	0	SPARE	a	38	20/1	0	SPARE
39	20/1	0	SPARE	b	40	20/1	0	SPARE
41	20/1	0	SPARE	c	42	20/1	0	SPARE

LUG LOAD: 6.74 KVA PANEL P5

	CONN. KVA	CALC. KVA			CONN. KVA	CALC. KVA	
LIGHTING	0	0	(125%)	CONTINUOUS	0	0	(125%)
LARGEST MOTOR	0	0	(125%)	HEATING	0	0	(100%)
OTHER MOTORS	0	0	(100%)	NONCONTINUOUS	1.7	1.7	(100%)
RECEPTACLES	12.2	11.1	(50%>10)	KITCHEN EQUIP	0	0	(N/A)
METERBANK	0	0	(23%)	NONCOIN/DIVERSE	0	0	(N/A)
GST ROOMS	0	0	(50%)	TOTAL KVA	13.9	12.8	

BALANCED THREE PHASE AMPS 35.6

PHASE BALANCE PERCENT: PHASE A 104% PHASE B 86.9% PHASE C 109%

Panel P5

Panel P5	Room	Volts 208Y/120V 3P 4W	AIC 22,000
	Mounting SURFACE	Bus Amps 250	Main Bkr MLO
	Fed from P2	Neutral 100%	Lugs STANDARD
	Note:		

CKT #	CKT BKR	LOAD KVA	CIRCUIT DESCRIPTION		CKT #	CKT BKR	LOAD KVA	CIRCUIT DESCRIPTION
1	20/1	0.72	RECEPTACLE	a	2	20/1	0	SPARE
3	20/1	0.1	FA POWER SUPPLY	b	4	20/1	0	SPARE
5	20/1	0.72	RECEPTACLE	c	6	20/1	0	SPARE
7	20/1	0.1	FA POWER SUPPLY	a	8	20/1	0	SPARE
9	20/1	0.72	RECEPTACLE	b	10	20/1	0	SPARE
11	20/1	0.1	FA POWER SUPPLY	c	12	20/1	0	SPARE
13	20/1	0.72	RECEPTACLE	a	14	20/1	0	SPARE
15	20/1	0.1	FA POWER SUPPLY	b	16	20/1	0	SPARE
17	20/1	0	SPARE	c	18	20/1	0	SPARE
19	20/1	0.18	RECEPTACLE	a	20	20/1	0	SPARE
21	20/1	0.18	RECEPTACLE	b	22	20/1	0	SPARE
23	20/1	0.54	RECEPTACLE	c	24	20/1	0	SPARE
25	20/1	0.54	RECEPTACLE	a	26	20/1	0	SPARE
27	20/1	0.54	RECEPTACLE	b	28	20/1	0	SPARE
29	20/1	0.54	RECEPTACLE	c	30	20/1	0	SPARE
31	20/1	0.2	SMOKE GUARD	a	32	20/1	0	SPARE
33	20/1	0.2	SMOKE GUARD	b	34	20/1	0	SPARE
35	20/1	0.54	RECEPTACLE	c	36	20/1	0	SPARE
37	20/1	0	SPARE	a	38	20/1	0	SPARE
39	20/1	0	SPARE	b	40	20/1	0	SPARE
41	20/1	0	SPARE	c	42	20/1	0	SPARE

	CONN. KVA	CALC. KVA			CONN. KVA	CALC. KVA	
LIGHTING	0	0	(125%)	CONTINUOUS	0	0	(125%)
LARGEST MOTOR	0	0	(125%)	HEATING	0	0	(100%)
OTHER MOTORS	0	0	(100%)	NONCONTINUOUS	0.8	0.8	(100%)
RECEPTACLES	5.94	5.94	(50%>10)	KITCHEN EQUIP	0	0	(N/A)
METERBANK	0	0	(23%)	NONCOIN/DIVERSE	0	0	(N/A)
GST ROOMS	0	0	(50%)	TOTAL KVA	6.74	6.74	

BALANCED THREE PHASE AMPS 18.7

PHASE BALANCE PERCENT: PHASE A 109% PHASE B 81.9% PHASE C 109%

GFCI = GFCI CIRCUIT BREAKER, PER NEC 210.8(A)(2), 210.8(B)
GFCI SHALL BE INSTALLED IN A READILY ACCESSIBLE LOCATION

PYATOK
1611 TELEGRAPH AVE.
SUITE 200
OAKLAND, CA 94612
T. 510.465.7010 | F. 510.465.8575
www.pyatok.com

THE UNITY COUNCIL
1900 FRUITVALE AVE
#2A
OAKLAND, CA 94601

EMERALD CITY ENGINEERS, INC
21705 Highway 99 Lynnwood, WA 98036 425-741-1200 tel / 1201 fax

2700 INTERNATIONAL
OAKLAND, CA 94601

STAMP: REGISTERED PROFESSIONAL ENGINEER ADAM C. FRENCH E19421 EXP. 3-31-23 ELECTRICAL STATE OF CALIFORNIA 12-09-22

ISSUE SCHEDULE

100 SD	5/11/22
50 DD	7/15/22
100 DD	9/16/22
PRICING SET	11/11/22
PERMIT SET	12/09/22

REVISION SCHEDULE

NO.	ISSUE	DATE

JOB NUMBER:	2049-008
DRAWN BY:	TH
CHECKED BY:	AF
ISSUE DATE:	12/09/2022
SCALE:	

TITLE:

PANEL SCHEDULES

SHEET:

E5.05

PRELIMINARY - Not for Construction -

© 2019 PYATOK ARCHITECTURE & URBAN DESIGN

4/22/2022 6:28:22 PM

COPYRIGHT 2022, EMERALD CITY ENGINEERS, INC.
THUYNH J:\2049-008 2700 INTERNATIONAL, OAKLAND, CA\DWG\E505 PANEL SCHEDULES.DWG 11-29-2022 15:29

FP

ROOM
MOUNTING **FLOOR**
FED FROM **MDPB**
NOTE

VOLTS **208Y/120V 3P 4W**
BUS AMPS **1000**
NEUTRAL **100%**

AIC **65,000**
MAIN BKR **1000**
LUGS **STANDARD**

CKT #	CIRCUIT DESCRIPTION	KVA LOAD A	B	C	BREAKER TRIP/POLES	FEEDER RACEWAY AND CONDUCTORS
1	**FIRE PUMP**	18	18	18	200/3	2"C,3#3/0,#3/0N,#6G
	TOTAL CONNECTED KVA BY PHASE	18	18	18		

	CONN. KVA	CALC. KVA			CONN. KVA	CALC. KVA	
LIGHTING	0	0	(125%)	CONTINUOUS	0	0	(125%)
LARGEST MOTOR	54	67.6	(125%)	HEATING	0	0	(100%)
OTHER MOTORS	0	0	(100%)	NONCONTINUOUS	0	0	(100%)
RECEPTACLES	0	0	(50%>10)	KITCHEN EQUIP	0	0	(N/A)
METERBANK	0	0	(23%)	NONCOIN/DIVERSE	0	0	(N/A)
GST ROOMS	0	0	(50%)	TOTAL KVA	54	67.6	

BALANCED THREE PHASE AMPS **188**

150 150 150

INV

ROOM
MOUNTING **FLOOR**
FED FROM **MDPB**
NOTE

INPUT VOLTS **208Y/120V 3P 4W**
OUTPUT VOLTS **208Y/120V 3P 4W**

AIC **22,000**
INPUT KVA **10**
OUTPUT KVA **10**

CKT #	BREAKER TRIP/POLES	CIRCUIT DESCRIPTION	LOAD KVA A	B	C	FEEDER RACEWAY AND CONDUCTORS
1		**PANEL E1**	1.24	1.39	0.4	–/3 1–1/2"C,3#1/0 AL,#1/0 AL N,#6 AL G
		TOTAL CONNECTED KVA BY PHASE	1.24	1.39	0.4	

	CONN. KVA	CALC. KVA			CONN. KVA	CALC. KVA	
LIGHTING	3.03	3.78	(125%)	CONTINUOUS	0	0	(125%)
LARGEST MOTOR	0	0	(125%)	HEATING	0	0	(100%)
OTHER MOTORS	0	0	(100%)	NONCONTINUOUS	0	0	(100%)
RECEPTACLES	0	0	(50%>10)	KITCHEN EQUIP	0	0	(N/A)
METERBANK	0	0	(23%)	NONCOIN/DIVERSE	0	0	(N/A)
GST ROOMS	0	0	(50%)	TOTAL KVA	3.03	3.78	

BALANCED THREE PHASE AMPS **10.5**

10.3 11.5 3.33

WH

Panel
Room **Mounting SURFACE**
Fed from **MDPB**
Note:

Volts **208Y/120V 3P 4W**
Bus Amps **500**
Neutral **100%**

AIC **22,000**
Main Bkr **MLO**
Lugs **STANDARD**

CKT #	CKT BKR	LOAD KVA	CIRCUIT DESCRIPTION		CKT #	CKT BKR	LOAD KVA	CIRCUIT DESCRIPTION
1	50/3	12.6	BP–1	a	2	80/2	10.4	HPWH–4
3	|			b	4	|		
5	|			c	6	80/2	10.4	HPWH–5
7	20/3	2.83	HWCP–1	a	8	|		
9	|			b	10	80/2	10.4	HPWH–6
11	|			c	12	|		
13	20/1	0	SPARE	a	14	80/2	10.4	HPWH–7
15	20/1	0	SPARE	b	16	|		
17	20/1	0	SPARE	c	18	80/2	10.4	HPWH–8
19	20/3	3.99	HPCP–1	a	20	|		
21	|			b	22	20/1	0.2	AQUASTAT, PUMP CONTROLLER
23	|			c	24	20/1	0	SPARE
25	110/3	30	EWH–1	a	26	20/1	0	SPARE
27	|			b	28	20/1	0	SPARE
29	|			c	30	20/1	0	SPARE
31	80/2	10.4	HPWH–1	a	32	20/1	0	SPARE
33	|			b	34	20/1	0	SPARE
35	80/2	10.4	HPWH–2	c	36	20/1	0	SPARE
37	|			a	38	20/1	0	SPARE
39	80/2	10.4	HPWH–3	b	40	20/1	0	SPARE
41	|			c	42	20/1	0	SPARE

	CONN. KVA	CALC. KVA			CONN. KVA	CALC. KVA	
LIGHTING	0	0	(125%)	CONTINUOUS	0	0	(125%)
LARGEST MOTOR	6.32	7.9	(125%)	HEATING	118	118	(100%)
OTHER MOTORS	9.15	9.15	(100%)	NONCONTINUOUS	0.2	0.2	(100%)
RECEPTACLES	0	0	(50%>10)	KITCHEN EQUIP	0	0	(N/A)
METERBANK	0	0	(23%)	NONCOIN/DIVERSE	0	0	(N/A)
GST ROOMS	0	0	(50%)	TOTAL KVA	133	135	

BALANCED THREE PHASE AMPS **374**

PHASE BALANCE PERCENT: PHASE A **108%** PHASE B **96.5%** PHASE C **96%**

MDPA

ROOM
MOUNTING **FLOOR**
FED FROM **XFMR–A**
NOTE

VOLTS **208Y/120V 3P 4W**
BUS AMPS **1200**
NEUTRAL **100%**

AIC **65,000**
MAIN BKR **MLO**
LUGS **STANDARD**

CKT #	CIRCUIT DESCRIPTION	KVA LOAD A	B	C	BREAKER TRIP/POLES	FEEDER RACEWAY AND CONDUCTORS
1	**SWITCHBOARD METERBANK–A**	541	541	541	1200/3	(4)3–1/2"C,3#500kcmil AL,#500kcmil AL N,#250kcmil AL G
	TOTAL CONNECTED KVA BY PHASE	541	541	541		

	CONN. KVA	CALC. KVA			CONN. KVA	CALC. KVA	
LIGHTING	0	0	(125%)	CONTINUOUS	0	0	(125%)
LARGEST MOTOR	0	0	(125%)	HEATING	0	0	(100%)
OTHER MOTORS	0	0	(100%)	NONCONTINUOUS	0	0	(100%)
RECEPTACLES	0	0	(50%>10)	KITCHEN EQUIP	0	0	(N/A)
METERBANK	1,620	373	(23%)	NONCOIN/DIVERSE	0	0	(N/A)
GST ROOMS	0	0	(50%)	TOTAL KVA	1,620	373	

BALANCED THREE PHASE AMPS **1,040**

4,510 4,510 4,510

MDPB

ROOM
MOUNTING **FLOOR**
FED FROM **XFMR–B**
NOTE

VOLTS **208Y/120V 3P 4W**
BUS AMPS **2500**
NEUTRAL **100%**

AIC **65,000**
MAIN BKR **2500**
LUGS **STANDARD**

CKT #	CIRCUIT DESCRIPTION	KVA LOAD A	B	C	BREAKER TRIP/POLES	FEEDER RACEWAY AND CONDUCTORS
1	SWITCHBOARD FP	18	18	18	–/3	(3)3"C,3#400kcmil,#400kcmil N,#2/0G
2	RETAIL	24	24	24	200/3	2"C,3#250kcmil,#4 AL G
3	RETAIL	24	24	24	200/3	2"C,3#250kcmil,#4 AL G
4	RETAIL	24	24	24	200/3	2"C,3#250kcmil,#4 AL G
5	RETAIL	24	24	24	200/3	2"C,3#250kcmil,#4 AL G
6	PANEL WH	47.8	42.8	42.6	500/3	(2)3"C,3#350kcmil AL,#350kcmil AL N,#1/0 AL G
7	PANEL EV	13.6	13.6	13.6	400/3	(2)2–1/2"C,3#250kcmil AL,#250kcmil AL N,#1 AL G
8	PANEL L	19.7	15.3	15.9	400/3	(2)2–1/2"C,3#250kcmil AL,#250kcmil AL N,#1 AL G
9	PANEL L1	1.98	4.11	2.77	100/3	1–1/2"C,3#1/0 AL,#1/0 AL N,#6 AL G
10	PANEL P1A	21.3	19.3	15.8	250/3	3"C,3#350kcmil AL,#350kcmil AL N,#2 AL G
11	PANEL M1	22.2	19.3	10.8	250/3	3"C,3#350kcmil AL,#350kcmil AL N,#2 AL G
12	PANEL L2	0.898	0.797	0.812	100/3	1–1/2"C,3#1/0 AL,#1/0 AL N,#6 AL G
13	PANEL P2	4.84	4.04	5.06	250/3	3"C,3#350kcmil AL,#350kcmil AL N,#2 AL G
14	PANEL M2	11.3	9.34	9.22	250/3	3"C,3#350kcmil AL,#350kcmil AL N,#2 AL G
15	UPS INV	1.24	1.39	0.4	100/3	1–1/2"C,3#1/0 AL,#1/0 AL N,#6 AL G
16	ELEV–A	9.42	9.42	9.42	125/3	1–1/2"C,3#1,#1N,#6G
17	ELEV–B	9.42	9.42	9.42	125/3	1–1/2"C,3#1,#1N,#6G
18	SPARE	0	0	0	20/3	
19	SPARE	0	0	0	20/3	
20	SPACE FOR SOLAR PV	0	0	0	200/3	–
	TOTAL CONNECTED KVA BY PHASE	278	263	250		

	CONN. KVA	CALC. KVA			CONN. KVA	CALC. KVA	
LIGHTING	14.4	18	(125%)	CONTINUOUS	45.3	56.6	(125%)
LARGEST MOTOR	54	67.6	(125%)	HEATING	186	186	(100%)
OTHER MOTORS	146	146	(100%)	NONCONTINUOUS	20.5	20.5	(100%)
RECEPTACLES	28.2	19.1	(50%>10)	KITCHEN EQUIP	8.1	8.1	(100%)
METERBANK	0	0	(23%)	NONCOIN/DIVERSE	288	288	(100%)
GST ROOMS	0	0	(50%)	TOTAL KVA	791	810	

BALANCED THREE PHASE AMPS **2,250**

2,310 2,200 2,080

GFCI = GFCI CIRCUIT BREAKER, PER NEC 210.8(A)(2), 210.8(B)
GFCI SHALL BE INSTALLED IN A READILY ACCESSIBLE LOCATION

PYATOK
1611 TELEGRAPH AVE.
SUITE 200
OAKLAND, CA 94612
T. 510.465.7010 | F. 510.465.8575
www.pyatok.com

THE UNITY COUNCIL
1900 FRUITVALE AVE
#2A
OAKLAND, CA
94601

EMERALD CITY ENGINEERS, INC
21705 Highway 99 Lynnwood, WA
98036 425-741-1200 tel / 1201 fax

2700 INTERNATIONAL
OAKLAND, CA 94601

STAMP:
REGISTERED PROFESSIONAL ENGINEER — ROY C. TREVOR — E19427 — EXP. 3-31-23 — ELECTRICAL — STATE OF CALIFORNIA
12-09-22

ISSUE SCHEDULE

100 SD	5/11/22
50 DD	7/15/22
100 DD	9/16/22
PRICING SET	11/11/22
PERMIT SET	12/09/22

REVISION SCHEDULE

NO.	ISSUE	DATE

JOB NUMBER: 2049-008
DRAWN BY: TH
CHECKED BY: AF
ISSUE DATE: 12/09/2022
SCALE:
TITLE: **PANEL SCHEDULES**

SHEET: **E5.06**

PRELIMINARY - Not for Construction -

© 2019 PYATOK ARCHITECTURE & URBAN DESIGN

4/22/2022 6:28:22 PM

COPYRIGHT 2022, EMERALD CITY ENGINEERS, INC.
THUYNH J:\2049-008 2700 INTERNATIONAL, OAKLAND, CA\DWG\E506 PANEL SCHEDULES.DWG 11-29-2022 15:29

FAULT CURRENT SCHEDULE

DEVICE	FAULT	AIC RATING	L-N VOLTS	FED FROM		FEEDER				TOTAL MOTOR	DIRECTLY CONNECTED MOTOR LOAD			
				DEVICE	FAULT	SIZE	X / 1000'	R / 1000'	LENGTH	FAULT	KVA	FAULT	X	R
MDPA	50,001	65,000	120V	XFMR-A	50,300	(3)#600kcmil	0.013	0.0077	1'					
METERBANK-A	42,120	65,000	120V	MDPA	50,001	(4)#500kcmil AL	0.0098	0.0108	37'					
MDPB	48,015	65,000	120V	XFMR-B	50,300	(8)#600kcmil AL	0.0049	0.0045	41'	2,247	56.5	628	0.1855	0.04637
EV	28,175	42,000	120V	MDPB	45,768	(2)#250kcmil AL	0.0205	0.0425	47'	730				
FP	40,595	65,000	120V	MDPB	45,768	(3)#400kcmil	0.0133	0.011	30'	1,777	54	600	0.194	0.04851
INV	10,824	22,000	120V	MDPB	45,768	#1/0 AL	0.044	0.2	48'	74				
E1	8,307	22,000	120V	INV	10,750	#1/0 AL	0.044	0.2	17'	41				
E2	2,204	22,000	120V	E1	8,266	#1/0 AL	0.044	0.2	196'	2				
E5	1,916	22,000	120V	E2	2,202	#1/0 AL	0.044	0.2	40'	2				
L	29,560	42,000	120V	MDPB	45,768	(2)#250kcmil AL	0.0205	0.0425	43'	1,073	38.4	426	0.2731	0.06826
L1	11,973	22,000	120V	MDPB	45,768	#1/0 AL	0.044	0.2	42'	94				
L2	3,155	22,000	120V	MDPB	45,768	#1/0 AL	0.044	0.2	180'	6				
L5	2,596	22,000	120V	L2	3,149	#1/0 AL	0.044	0.2	40'	3				
M1	24,146	42,000	120V	MDPB	45,768	#350kcmil AL	0.04	0.061	39'	591	6.27	70	1.673	0.4183
M2	7,805	22,000	120V	MDPB	45,768	#350kcmil AL	0.04	0.061	186'	113				
M5	6,583	22,000	120V	M2	7,692	#350kcmil AL	0.04	0.061	40'	98	5.88	65	1.783	0.4457
P1A	23,934	42,000	120V	MDPB	45,768	#350kcmil AL	0.04	0.061	40'	724	15.5	172	0.6781	0.1695
P1B	20,521	42,000	120V	P1A	23,210	#350kcmil AL	0.04	0.061	12'	542	8.12	90	1.291	0.3228
P2	8,048	22,000	120V	MDPB	45,768	#350kcmil AL	0.04	0.061	178'	53				
P5	6,737	22,000	120V	P2	7,995	#350kcmil AL	0.04	0.061	40'	37				
WH	13,804	22,000	120V	MDPB	45,768	(2)#350kcmil AL	0.02	0.0305	187'	350	18.3	203	0.5733	0.1433

FEEDER DISTANCES SHOWN ARE FOR FAULT CURRENT CALCULATIONS ONLY AND ARE NOT TO BE USED TO DETERMINE THE AMOUNT OF MATERIAL.

PGE'S CONTRIBUTION TO THE AVAILABLE FAULT AT THE SECONDARY TERMINALS OF THE UTILITY TRANSFORMER IS 50,200A (TO BE CONFIRMED) PER PGE.

4/22/2022 6:28:22 PM

COPYRIGHT 2022, EMERALD CITY ENGINEERS, INC.
THUYNH J:\2049-008 2700 INTERNATIONAL, OAKLAND, CA\DWG\E307 FAULT CURRENT SCHEDULE.DWG 11-29-2022 15:28

PYATOK
1611 TELEGRAPH AVE.
SUITE 200
OAKLAND, CA 94612
T. 510.465.7010 | F. 510.465.8575
www.pyatok.com

THE UNITY COUNCIL
1900 FRUITVALE AVE
#2A
OAKLAND, CA
94601

EMERALD CITY ENGINEERS, INC
21705 Highway 99 Lynnwood, WA
98036 425-741-1200 tel / 1201 fax

2700 INTERNATIONAL
OAKLAND, CA 94601

STAMP:
REGISTERED PROFESSIONAL ENGINEER
ROY C. FRENCH
E19427
EXP. 3-31-23
ELECTRICAL
STATE OF CALIFORNIA
12-09-22

ISSUE SCHEDULE

100 SD	5/11/22
50 DD	7/15/22
100 DD	9/16/22
PRICING SET	11/11/22
PERMIT SET	12/09/22

REVISION SCHEDULE

NO.	ISSUE	DATE

JOB NUMBER:	2049-008
DRAWN BY:	TH
CHECKED BY:	AF
ISSUE DATE:	12/09/2022
SCALE:	
TITLE:	**PANEL SCHEDULES**

SHEET:
E5.07

PRELIMINARY - Not for Construction -

© 2019 PYATOK ARCHITECTURE & URBAN DESIGN

VOLTAGE DROP SCHEDULE

DEVICE	FEEDER			BRANCH CIRCUIT		TOTAL VOLTAGE DROP
	VOLTAGE DROP	WIRE SIZE	LENGTH	MAX VOLTAGE DROP	WIRE SIZE	
METERBANK-A	0.47%	(4)#500kcmil AL	37'	0.15% (TAP 1)	(13)#750kcmil AL	0.62%
				METERBANK-A-1: 0.15%	(13)#750kcmil AL	
EV	0.75%	(2)#250kcmil AL	47'	1.91% (CKT 21,23)	#6	2.66%
				EV-1,3: 1.4%	#6	
				EV-5,7: 1.4%	#6	
				EV-9,11: 1.65%	#6	
				EV-13,15: 1.65%	#6	
				EV-17,19: 1.91%	#6	
				EV-21,23: 1.91%	#6	
FP	0.57%	(3)#400kcmil	30'	0.41% (TAP 1)	#3/0	0.98%
				FP-1: 0.41%	#3/0	
INV	0.57% / 0%	#1/0 AL / #1/0 AL	48'	–	–	0.57%
E1	0.6%	#1/0 AL	17'	1.73% (CKT 9)	#12	2.33%
				E1-1: 0.62%	#12	
				E1-3: 1.01%	#12	
				E1-5: 0.4%	#12	
				E1-7: 1.71%	#12	
				E1-9: 1.73%	#12	
E2	0.77%	#1/0 AL	196'	0.57% (CKT 7)	#12	1.34%
				E2-1: 0.25%	#12	
				E2-3: 0.55%	#12	
				E2-5: 0.26%	#12	
				E2-7: 0.57%	#12	
				E2-9: 0.28%	#12	
				E2-11: 0.55%	#12	
				E2-13: 0.54%	#12	
E5	0.78%	#1/0 AL	40'	0.52% (CKT 7)	#12	1.3%
				E5-1: 0.18%	#12	
				E5-3: 0.48%	#12	
				E5-5: 0.19%	#12	
				E5-7: 0.52%	#12	
				E5-9: 0.48%	#12	
L	0.73%	(2)#250kcmil AL	43'	2.37% (CKT 12,14)	#10	3.11%
				L-1: 1.39%	#12	
				L-3: 1.86%	#10	
				L-5,7: 2.01%	#10	
				L-9: 1.91%	#10	
				L-11,13: 2.07%	#10	
				L-15: 2.28%	#10	
				L-21: 1.97%	#10	
				L-23,25: 2.12%	#10	
				L-27: 2.02%	#10	
				L-29,31: 2.17%	#10	
				L-33: 2.07%	#10	
				L-35,37: 2.23%	#10	
				L-39: 2.11%	#10	
				L-2,4: 2.28%	#10	
				L-6: 2.17%	#10	
				L-8,10: 2.34%	#10	
				L-12,14: 2.37%	#10	
L1	0.7%	#1/0 AL	42'	2.86% (CKT 27)	#12	3.56%
				L1-1: 0.13%	#12	
				L1-3: 0.16%	#12	
				L1-9: 1.03%	#12	
				L1-11: 2.41%	#12	
				L1-13: 1.82%	#12	
				L1-15: 1.13%	#12	
				L1-17: 0.53%	#12	
				L1-19: 0.08%	#12	
				L1-21: 0.15%	#12	
				L1-23: 1.13%	#12	
				L1-25: 1.15%	#12	
				L1-27: 2.86%	#12	
				L1-29: 1.19%	#12	
				L1-31: 1.17%	#12	
				L1-33: 1.03%	#12	
				L1-35: 2.18%	#12	
				L1-37: 0.27%	#12	
				L1-39: 0.71%	#12	
				L1-41: 0.77%	#12	
				L1-2: 0.53%	#12	
				L1-4: 2.33%	#12	
				L1-6: 0.32%	#12	
				L1-8: 0.59%	#12	
				L1-10: 0.6%	#12	
				L1-12: 0.21%	#12	
				L1-14: 0.49%	#12	
L2	0.74%	#1/0 AL	180'	0.91% (CKT 13)	#12	1.65%
				L2-1: 0.03%	#12	
				L2-3: 0.26%	#12	
				L2-5: 0.29%	#12	
				L2-7: 0.58%	#12	
				L2-9: 0.69%	#12	
				L2-11: 0.65%	#12	
				L2-13: 0.91%	#12	
				L2-15: 0.69%	#12	
				L2-17: 0.76%	#12	

VOLTAGE DROP SCHEDULE (CONT.)

DEVICE	FEEDER			BRANCH CIRCUIT		TOTAL VOLTAGE DROP
	VOLTAGE DROP	WIRE SIZE	LENGTH	MAX VOLTAGE DROP	WIRE SIZE	
L5	0.77%	#1/0 AL	40'	0.71% (CKT 17)	#12	1.48%
				L5-1: 0.31%	#12	
				L5-3: 0.27%	#12	
				L5-7: 0.26%	#12	
				L5-9: 0.26%	#12	
				L5-11: 0.49%	#12	
				L5-13: 0.66%	#12	
				L5-15: 0.52%	#12	
				L5-17: 0.71%	#12	
				L5-19: 0.03%	#12	
M1	0.84%	#350kcmil AL	39'	2.44% (CKT 11)	#12	3.28%
				M1-1: 0.58%	#12	
				M1-3: 0.59%	#12	
				M1-5: 0.31%	#12	
				M1-7: 0.27%	#12	
				M1-9: 1.55%	#12	
				M1-11: 2.44%	#12	
				M1-13,15: 1.19%	#4	
				M1-17,19: 1.5%	#4	
				M1-21,23: 1.9%	#10	
				M1-25,27: 1.39%	#12	
				M1-29: 0.2%	#12	
				M1-31,33: 1.25%	#4	
				M1-35: 0.22%	#12	
				M1-37,39: 1.52%	#10	
				M1-41: 2.05%	#12	
				M1-2,4: 1.68%	#12	
				M1-6: 0.29%	#12	
				M1-8,10,12: 2.12%	#12	
				M1-14,16: 0.03%	#12	
				M1-18,20: 0.09%	#12	
				M1-22,24: 0.08%	#12	
M2	1.44%	#350kcmil AL	186'	1.14% (CKT 5)	#12	2.58%
				M2-1: 0.24%	#12	
				M2-3: 1.07%	#12	
				M2-5: 1.14%	#12	
M5	1.64%	#350kcmil AL	40'	2.96% (CKT 6,8)	#10	4.6%
				M5-1: 1%	#12	
				M5-3: 1.07%	#12	
				M5-5,7,9: 0.76%	#12	
				M5-11,13: 1.06%	#12	
				M5-15,17: 1.04%	#12	
				M5-19,21: 1.94%	#8	
				M5-23,25: 1.88%	#8	
				M5-2,4: 1.12%	#8	
				M5-6,8: 2.96%	#10	
				M5-10,12: 2%	#8	
				M5-14,16,18: 0.49%	#12	
				M5-20,22,24: 0.42%	#12	
				M5-26,28,30: 0.86%	#12	
P1A	0.87%	#350kcmil AL	40'	2.53% (CKT 14)	#12	3.4%
				P1A-1: 0.26%	#12	
				P1A-3: 0.28%	#12	
				P1A-5: 0.28%	#12	
				P1A-7: 0.26%	#12	
				P1A-9: 0.86%	#12	
				P1A-11: 1.34%	#12	
				P1A-13: 0.02%	#12	
				P1A-15: 0.02%	#12	
				P1A-17: 0.02%	#12	
				P1A-19: 1%	#12	
				P1A-21,23,25: 0.47%	#12	
				P1A-27: 0.07%	#12	
				P1A-29: 0.06%	#12	
				P1A-31,33,35: 0.54%	#10	
				P1A-37,39,41: 0.47%	#10	
				P1A-2: 0.48%	#12	
				P1A-4: 0.2%	#12	
				P1A-6: 0.43%	#12	
				P1A-8: 0.62%	#12	
				P1A-10: 0.68%	#12	
				P1A-12: 0.39%	#12	
				P1A-14: 2.53%	#12	
				P1A-16: 1.11%	#12	
				P1A-18: 2.24%	#10	
				P1A-20: 1.92%	#10	
				P1A-22: 0.31%	#12	
				P1A-24: 0.32%	#12	
				P1A-26: 1.31%	#12	
				P1A-28: 1.61%	#12	
				P1A-30: 1.23%	#12	
				P1A-32: 1.41%	#12	
P1B	0.93%	#350kcmil AL	12'	2.92% (CKT 12)	#12	3.85%
				P1B-1,3: 1.83%	#10	
				P1B-5: 2.9%	#12	
				P1B-7: 1.09%	#12	
				P1B-9: 1.29%	#12	

VOLTAGE DROP SCHEDULE (CONT.)

DEVICE	FEEDER			BRANCH CIRCUIT		TOTAL VOLTAGE DROP
	VOLTAGE DROP	WIRE SIZE	LENGTH	MAX VOLTAGE DROP	WIRE SIZE	
				P1B-11: 0.98%	#12	
				P1B-13: 0.42%	#12	
				P1B-15: 0.95%	#12	
				P1B-17: 0.72%	#12	
				P1B-19,21: 1.63%	#6	
				P1B-23: 2.65%	#12	
				P1B-25: 0.95%	#12	
				P1B-27: 1.67%	#12	
				P1B-29: 2.11%	#12	
				P1B-31: 0.13%	#12	
				P1B-33: 2.37%	#12	
				P1B-35: 0.32%	#12	
				P1B-37,39: 0.98%	#12	
				P1B-41: 0.95%	#12	
				P1B-2: 0.56%	#12	
				P1B-4: 0.41%	#12	
				P1B-6: 0.19%	#12	
				P1B-8: 0.19%	#12	
				P1B-10: 0.34%	#12	
				P1B-12: 2.92%	#12	
				P1B-14: 0.93%	#12	
				P1B-16: 1.98%	#10	
				P1B-18: 0.45%	#12	
				P1B-20: 0.27%	#12	
				P1B-24: 1.17%	#12	
				P1B-26: 2.28%	#12	
P2	0.88%	#350kcmil AL	178'	2.75% (CKT 13)	#12	3.63%
				P2-1: 0.33%	#12	
				P2-3: 0.05%	#12	
				P2-5: 2.58%	#12	
				P2-7: 0.36%	#12	
				P2-9: 0.5%	#12	
				P2-11: 0.08%	#12	
				P2-13: 2.75%	#12	
				P2-15: 0.38%	#12	
				P2-17: 0.68%	#12	
				P2-19: 0.1%	#12	
				P2-21: 0.77%	#12	
				P2-23: 1.79%	#12	
				P2-25: 0.9%	#12	
				P2-27: 1.92%	#12	
				P2-29: 1.03%	#12	
				P2-31: 0.68%	#12	
				P2-33: 0.73%	#12	
P5	0.92%	#350kcmil AL	40'	2.58% (CKT 9)	#12	3.5%
				P5-1: 2.41%	#12	
				P5-3: 0.34%	#12	
				P5-5: 0.33%	#12	
				P5-7: 0.05%	#12	
				P5-9: 2.58%	#12	
				P5-11: 0.36%	#12	
				P5-13: 0.5%	#12	
				P5-15: 0.08%	#12	
				P5-19: 0.62%	#12	
				P5-21: 0.6%	#12	
				P5-23: 1.66%	#12	
				P5-25: 0.77%	#12	
				P5-27: 1.76%	#12	
				P5-29: 0.9%	#12	
				P5-31: 0.64%	#12	
				P5-33: 0.7%	#12	
				P5-35: 1.11%	#12	
WH	***2.66%***	(2)#350kcmil AL	187'	0.97% (CKT 18,20)	#2	3.63%
				WH-1,3,5: 0.39%	#6	
				WH-7,9,11: 0.27%	#12	
				WH-13,15,17: 0.25%	#12	
				WH-19,21,23: 0.4%	#12	
				WH-25,27,29: 0.38%	#1	
				WH-31,33: 0.77%	#2	
				WH-35,37: 0.83%	#2	
				WH-39,41: 0.89%	#2	
				WH-2,4: 0.94%	#2	
				WH-6,8: 0.8%	#2	
				WH-10,12: 0.86%	#2	
				WH-14,16: 0.92%	#2	
				WH-18,20: 0.97%	#2	
				WH-22: 0.14%	#12	

PYATOK
1611 TELEGRAPH AVE.
SUITE 200
OAKLAND, CA 94612
T. 510.465.7010 | F. 510.465.8575
www.pyatok.com

THE UNITY COUNCIL
1900 FRUITVALE AVE
#2A
OAKLAND, CA
94601

EMERALD CITY ENGINEERS, INC
21705 Highway 99 Lynnwood, WA
98036 425-741-1200 tel / 1201 fax

2700 INTERNATIONAL

OAKLAND, CA 94601

STAMP:

REGISTERED PROFESSIONAL ENGINEER
ANDREW C. FRENCH
21942
EXP. 3-31-23
ELECTRICAL
STATE OF CALIFORNIA
12-09-22

ISSUE SCHEDULE

100 SD	5/11/22
50 DD	7/15/22
100 DD	9/16/22
PRICING SET	11/11/22
PERMIT SET	12/09/22

REVISION SCHEDULE

NO.	ISSUE	DATE

JOB NUMBER:	2049-008
DRAWN BY:	TH
CHECKED BY:	AF
ISSUE DATE:	12/09/2022
SCALE:	
TITLE:	VOLTAGE DROP SCHEDULE

SHEET:

E5.08

PRELIMINARY - Not for Construction -

© 2019 PYATOK ARCHITECTURE & URBAN DESIGN

4/22/2022 6:28:22 PM

COPYRIGHT 2022, EMERALD CITY ENGINEERS, INC.
T:\PROJ\2049-008 2700 INTERNATIONAL, OAKLAND, CA\DWG\E5DB VOLTAGE DROP SCHEDULE.DWG 11-29-2022 15:28

SHEET NOTES:

1. PROVIDE 25' LOOP FOR ALL RG6 & CAT6 CABLING AT BACKBOARD.
2. AT MPOE AND IDF, PROVIDE 3/4" FIREPROOF PLYWOOD. 2 COATS FIRE RESISTANT GRAY PAINT
3. REFER TO DETAIL 1/E6.02 FOR MULTIMEDIA PANEL (SMART BOX) DETAILS.
4. PATCH PANELS FOR TERMINATING DATA CABLES. LEVITON CAT6 RATED OR EQUAL, 110-TYPE WITH CROSS CONNECT WIRING. CAPACITY FOR 10% SPARE.
5. GROUNDING: PROVIDE A 1/4" X 4" X 12" COPPER GROUND BUS BAR WITH (20) 1/4" PREDRILLED HOLES, MOUNTED TO BACKBOARD WITH 1" THICK RUBBER/PORCLAIN SPACERS. CONNECT WITH (1) #6 COPPER SOLID GROUND TO GROUNDING ELECTRODE SYSTEM. PROVIDE AT MPOE, ALL IDF'S, AND I.T. CLOSET.
6. COMMON AREA PHONE, DATA, TV CONNECTIONS TO ROUTE TO THE I.T. RACK OR NEAREST IDF (PROVIDE TRUNKLINE CABLING AS NECESSARY).
7. IDF: VENDORS TO ALTERNATE FLOORS, CONTRACTOR TO CONFIRM EXACT LAYOUTS.
8. WIFI: PROVIDE IN ALL TENANT AMENITY AREAS (INCLUDING COURTYARDS AND ROOFTOP DECKS). PROVIDE CAT6 CABLES TO EACH OUTLET TO SERVICE WIFI ACCESS POINTS. CABLES SHALL NOT EXCEED 100 METERS AND SHALL TERMINATE ON 110 STYLE PUNCH DOWN BLOCKS IN I.T. CLOSET OR IDF CLOSETS. PROVIDE NECESSARY INFRASTRUCTURE AND TRUNKLINE CABLING FOR A FULLY FUNCTIONAL SYSTEM.
8. I.T. CLOSET: PROVIDE 42RU RACK (MINIMUM), CONFIRM WITH OWNER REQUIREMENTS.
9. EMERGENCY PHONES: IF A FIBER SYSTEM IS USED AS THE EMERGENCY PHONE SYSTEM, PROVIDE UPS BACKUP POWER: APC SMX1500RM2U WITH EXTENDED BATTERY PACK: APC SMX48RMBP2U, RACK MOUNTED AT MPOE.

FLAG NOTES:

1. (2) 4"C., (2) 2"C. EMT WITH TRUE-TAPE BETWEEN MPOE AND BOTTOM IDF CLOSET.
2. (4)4" SLEEVES BETWEEN IDFS (IF ROOMS DO NOT STACK, PROVIDE CONDUIT).
3. (2)3" CONDUITS TO I.T. CLOSET (CONFIRM LOCATION WITH OWNER). FOR PRICING, PROVIDE (2) RG6 COAX AND (6) CAT6 (OR FIBER).
4. CABLING FROM IDF TO MULTIMEDIA PANEL (SMART BOX):
   (1) MICRODUCT W/FIBER (AT&T)
   (1) MICRODUCT W/FIBER (COMCAST)
   (1) MICRODUCT SPARE
   (1) CAT6
   (1) COAX
5. ERRCS: PROVIDE (1) 2" CONDUIT FOR ERRCS, ROUTE 2-HR PROTECTED (IDF ROOM MAY BE 2-HR RATED FOR PROTECTION OF VERTICAL CABLE).

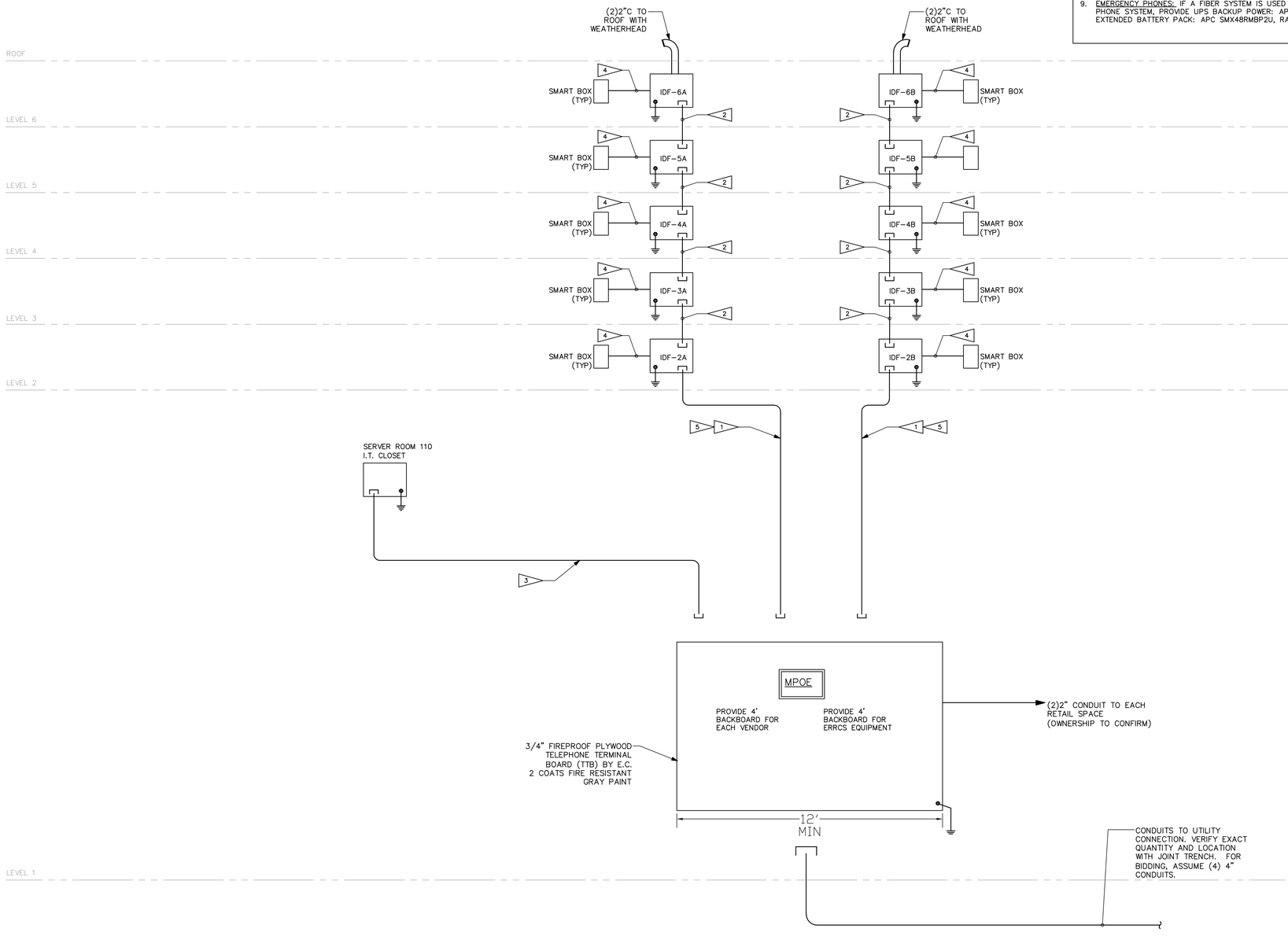

TEL/DATA/TV LOW VOLTAGE RISER DIAGRAM

SCALE: NONE

1 / E6.01

LOW VOLTAGE IS DESIGN/ASSIST.

THE ATTACHED PLANS AND RISER DIAGRAMS ARE TO PROVIDE GENERAL GUIDANCE FOR PHONE, DATA, TV, AND OTHER LOW VOLTAGE SYSTEMS. CONTRACTOR IS TO PROVIDE A FULLY FUNCTION SYSTEM BASED ON THE CRITERIA PROVIDED. ANY DISCREPANCIES ARE TO BE BROUGHT UP DURING THE BIDDING PROCESS.
REFER TO ELECTRICAL COVER SHEET FOR ADDITIONAL NOTES.

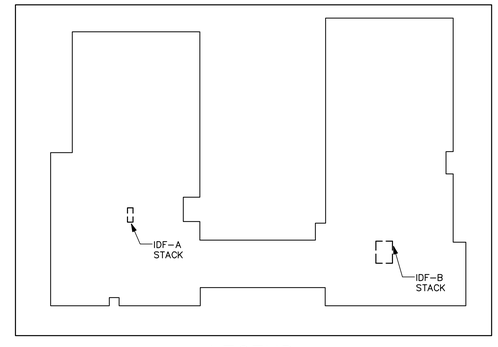

LEGEND

PYATOK
1611 TELEGRAPH AVE.
SUITE 200
OAKLAND, CA 94612
T. 510.465.7010 | F. 510.465.8575
www.pyatok.com

THE UNITY COUNCIL
1900 FRUITVALE AVE
#2A
OAKLAND, CA 94601

EMERALD CITY ENGINEERS, INC
21705 Highway 99 Lynnwood, WA
98036 425-741-1200 tel / 1201 fax

2700 INTERNATIONAL

OAKLAND, CA 94601

STAMP: REGISTERED PROFESSIONAL ENGINEER ANDREW C. FRENCH E 19427 EXP. 3-31-23 ELECTRICAL STATE OF CALIFORNIA
12-09-22

ISSUE SCHEDULE

100 SD	5/11/22
50 DD	7/15/22
100 DD	9/16/22
PRICING SET	11/11/22
PERMIT SET	12/09/22

REVISION SCHEDULE

NO.	ISSUE	DATE

JOB NUMBER:	2049-008
DRAWN BY:	TH
CHECKED BY:	AF
ISSUE DATE:	12/09/2022
SCALE:	

TITLE: **LOW VOLTAGE DIAGRAM**

SHEET: **E6.01**

PRELIMINARY - Not for Construction -

© 2019 PYATOK ARCHITECTURE & URBAN DESIGN

4/22/2022 6:28:22 PM

COPYRIGHT 2022, EMERALD CITY ENGINEERS, INC.
T:\PROJ\2049-008 2700 INTERNATIONAL, OAKLAND, CA\DWG\E601 LOW VOLTAGE DIAGRAM.DWG 11-29-2022 15:28

LOW VOLTAGE SERVICES									
Phone and Internet Service (FIBER)	**Joint Trench Designer**	**JT Contractor**	**Phone Company**	**Cable Company**	**Low Voltage Contractor**	**Electrical Contractor**	**Electrical Engineer**	**General Contractor**	**Owner**
Telephone Design from Street to MPOE	X	X							
Telephone / Data Design in Building							X		
Telephone Conduit in JT		X							
Telephone (Cable Construction) from Street to MPOE	X		X						
Telephone and Data (Cabling) from MPOE to IDF Rooms, installing Fiber			X						
Telephone / Data (Conduit) from MPOE to IDF Rooms						X	X		
Make up Blocks and Punch Down in IDF Rooms					X				
Telephone / Data (Fiber Cabling) from IDF to Smart Box in Units, provided by AT&T, installed by Low voltage contractor			X		X				
Telephone / Data Cabling (Punch Down) in Smart Box					X				
Telephone / Data (Cabling) from Smart Box to Wall Plates					X				
Provide Wall Plates					X				
Note: Allow (2) weeks to schedule AT&T for Fiber Install					X				
Cable TV and Internet Service (FIBER)									
Cable / Internet Design to MPOE	X								
Cable / Internet Design in Building					X		X		
Cable / Internet Conduit in JT		X							
Cable / Internet (Cable) to MPOE				X					
Cable / Internet from MPOE to IDF Rooms (Fiber)				X					
Cable / Internet (Conduit) from MPOE to IDF Rooms						X			
Make up Connect to Unit Wiring in IDF Rooms (Fiber)				X					
Cable / Internet Fiber & Microduct, provided by Cable Company, including Make Up				X					
Cable / Internet Installation of Microduct from IDF to Smart Box in Units					X				
Cable / Internet from Smart Box to Wall Plates (Punch down)					X				
Provide Wall Plates					X				
Satellite Service									
Satellite Design					X		X		
Satellite Hardware / Dishes					X				
Conduit from Roof to IDF Rooms						X			
Service from Dish to IDF Rooms					X				
Make up (Patch Panel) and Connect to Unit Wiring in IDF Rooms					X				
Satellite Cable from IDF to Smart Box in Units and box make-up					X				
Make Up Satellite Cabling in Smart Box					X				
Satellite Cable from Smart Box to Wall Plates					X				
Provide Wall Plates					X				
Digital TV Antenna (Service)									
Conduit from Roof to IDF Room						X			
Cabling From Roof to IDF Room					X				
Cabling from IDF to Unit (Use Satellite Cable if requested)					X				
Make Up Cabling in Smart Box (Use Satellite Cable if requested)					X				
Cabling from Smart box to Wall Jack (Use Satellite Cable if requested)					X				X
Close Circuit TV (Security Camera System)									
CCTV Design-Scope (location of devices per plans, specs for system type)							X		
CCTV Hardware / Cameras / Recording Devices/ TV Monitor in managers office (including system selection)					X				
Conduit from Recording Devices to Cameras						X			
Software / Set Up and Training					X				
Review by Property Management/Facilities (for Location)									X
Door Access Systems									
Door Access System Design (location on electrical plans, refer to specs for system design, must include software for remote management)							X		
Card Swipe and Key Pad Hardware					X				
120v Power and Conduit						X			
Low Voltage Wiring (to all devices, no line voltage remote devices allowed)					X				
Strike and Door Hardware / Including Gates (per door hardware schedule)								X	
Recording and Keying Equipment (including software for remote access)								X	
Cat6 cabling to Recording Equipment					X				
Power Assisted Doors								X	
Guest Entry Telephone Callbox System					X				
Review by Property Management/Facilities (prior to bidding)									X
Garage Door								X	
Fire Alarm									
Fire Alarm Design Criteria							X		
Site Conduit for Tamper and Flow Switches						X			
Fire Alarm Design					X				
Fire Alarm Panels, Bells and Wiring					X				
Conduit and Raceways for Wiring (if required by code)						X			
Phone Service where needed					X				
Make Up of Wiring					X				
Intrusion Detection									
Burglar Alarm Design Criteria (Coordinate Conduit and Power)							X		
Conduit for Wiring						X			
Burglar Alarm Design					X				
Burglar Alarm, Smarts and Parts					X				
Phone Service where needed					X				
Make Up of Wiring					X				
Review by Property Management/Facilities (prior to bidding)									
Other									
Fire Proof 3/4" Plywood Backboard (4'X8' in MPOE, 4'x4' in IDF for each provider)								X	
Power for all components						X			
Design of IDF Room							X		
Media Panel "smart box" with power						X			
Conduit for Irrigation Control Wiring (under Podium Deck)						X			
Power Doors								X	
Contractor Applied / Owner Pays for Permits								X	X
Owner IT System									
19" metal I.T. Rack with 3 compartments (coordinate with owner)					X				
Data Patch Panels (coordinate with owner)					X				
Make up (Patch Panels) Connect to phone/data/TV wiring in I.T. closet					X				
120v receptacle outlets (quantity per plans, located on rack)						X			
(12) CAT6 cables (or Fiber trunkline) with RJ45 jacks from MPOE terminated on I.T. Rack					X				
(2) RG6 Coax cables from MPOE terminated on I.T. Rack					X				
Tenant WIFI Equipment Selection (locations per electrical plans, Owner to send to vendors for design)					X				
Tenant WIFI Headend Equipment (located in I.T. closet)					X				
Tenant WIFI Cat6 cabling to headend equipment					X				
Tenant WIFI Cat6 cabling to remote devices (located in all Public Amenity Spaces)					X				
12" x 12" Access Panels for WIFI remote devices (if hardlid)					X				

LOW VOLTAGE COORDINATION MATRIX (3)

SCALE: NONE

SHEET NOTES

1. ALL EQUIPMENT TO BE MOUNTED TO BACKBOARD. MARK EACH BACKBOARD WITH VENDOR SPACE PRIOR TO UTILITY COMPANIES INSTALLATION.

TYPICAL IDF LAYOUT (2)

SCALE: NONE

SMART BOX AND CABLING DIAGRAM

NOTES:

1. PROVIDE THE SMART BOX WITH THE SURGE J-BOX KIT AND ONE DUPLEX RECEPTACLE.
2. COORDINATE WITH THE SATELLITE, CABLE TV AND TELEPHONE/DATA PROVIDERS INSTALLATION AND TERMINATION OF CABLING AND DEVICES. SYSTEM SHALL BE INSTALLED COMPLETE AND OPERATIONAL.
3. PROVIDE THE "SMART BOX" STRUCTURED MEDIA ENCLOSURE WITH BUILT-IN TERMINATION BOARDS FOR ALL DEVICES (TV, PHONE, DATA).
4. CABLE TV, PROVIDE BLACK COAX CABLE. SATELLITE TV, PROVIDE WHITE COAX CABLE.
5. INDIVIDUAL CABLE TO EACH DEVICE FROM SMART BOX, NO DAISY CHAINING.
6. ALL PHONE, DATA, AND TV WIRING BY CONTRACTOR.

TYP OUTLET TRIM

EQUIPMENT LIST:

LEGRAND ENP4250 – 42" MEDIA DISTRIBUTION ENCLOSURE (PLASTIC WITH HINGED DOOR)

- –FIBER TRANSITION OUTLET (FTO)
- –UNIVERSAL MOUNTING PLATE (UMP)
- –HURRICAN CLIP (FIBER MANAGEMENT CLIP)
- –DATA/VOICE MODULE (8–PORT CAT6)
- –VOICE MODULE (8–PORT VOICE WITH RJ31X)
- –SC/APC JACK (FIBER KEYSTONE W/SHUTTER)
- –INTEGRAL DUPLEX POWER 120V OUTLET.

SHEET NOTES

CONTRACTOR TO PROVIDE THE FOLLOWING:
- – TERMINATION OF CABLE WITHIN SMART BOX (INCLUDING MAKE UP)
- – CABLING FROM SMART BOX TO DEVICE
- – WALL PLATE WITH PORT
- – PROVIDE #10 CU GROUND WIRE FROM THE GROUND LUG IN THE RECEPTACLE, TERMINATED AT THE DUPLEX BOX FOR THE FIBER TERMINATION. LEAVE WITH 3' OF GROUND WIRE.

APARTMENT UNIT

SMART BOX LAYOUT (1)

SCALE: NONE

PYATOK
1611 TELEGRAPH AVE.
SUITE 200
OAKLAND, CA 94612
T. 510.465.7010 | F. 510.465.8575
www.pyatok.com

THE UNITY COUNCIL
1900 FRUITVALE AVE
#2A
OAKLAND, CA 94601

EMERALD CITY ENGINEERS, INC
21705 Highway 99 Lynnwood, WA 98036 425-741-1200 tel / 1201 fax

2700 INTERNATIONAL
OAKLAND, CA 94601

STAMP: REGISTERED PROFESSIONAL ENGINEER ADAM C. FRENCH E19421 EXP. 3-31-23 ELECTRICAL STATE OF CALIFORNIA 12-09-22

ISSUE SCHEDULE

100 SD	5/11/22
50 DD	7/15/22
100 DD	9/16/22
PRICING SET	11/11/22
PERMIT SET	12/09/22

REVISION SCHEDULE

NO.	ISSUE	DATE

JOB NUMBER: 2049-008
DRAWN BY: TH
CHECKED BY: AF
ISSUE DATE: 12/09/2022
SCALE:
TITLE:
LOW VOLTAGE DETAILS

SHEET:
E6.02

PRELIMINARY - Not for Construction -

© 2019 PYATOK ARCHITECTURE & URBAN DESIGN
4/22/2022 6:28:22 PM
COPYRIGHT 2022, EMERALD CITY ENGINEERS, INC.
THUYNH J:\2049-008 2700 INTERNATIONAL, OAKLAND, CA\DWG\E602 LOW VOLTAGE DETAILS.DWG 11-29-2022 15:28

COORDINATION MATRIX

	Item	Furnished By	Installed By	Power Wiring By	Control Wiring By	Testing & Balancing By
MECHANICAL & PLUMBING						
	Equipment Motors	M	M	E	M	M
	Magnetic Motor Starters, automatically controlled with or without HOA switches	E	E	E	M	M
	Magnetic Motor Starters, manually controlled	E	E	E	NA	M
	Magnetic Motor Starters, furnished with mechanical equipment, factory mounted	M	M	E	M	M
	Sail switches if required for positive air flow annunciation	NA	NA	NA	NA	NA
	Variable Frequency Drives	M	M	E	M	M
	Disconnect switches and 120-volt recepts	E	E	E	--	--
	Disconnect switches, manual motor starters, thermal overload switches	E	E	E	NA	E
	MECH Controls, valves, float controls, damper motors, low voltage tstats, other misc.	M	M	E	M	M
	MECH Controls, line voltage T-stats	E	E	E	E	M
	Environmental Control Systems	M	M	E	M	M
	Electric Cabinet Heaters, unit heaters	E	E	E	E	E
	Electric duct heating coils	M	M	E	M	M
	Duplex Sump Controller & Starters	M	E	E	E	M
	Heat Trace	E	E	E	E	M
	Solenoid Valves	P	P	E	E	P
	Commercial Kitchen hood shunt trip	E	E	E	E	E
OTHER						
	Light pole concrete bases	E	E	N/A	N/A	N/A
	Housekeeping concrete pads	GC	GC	N/A	N/A	N/A
	Irrigation controller	GC	E	N/A	GC	GC
	Motorized doors	GC	GC	E	GC	GC
FIRE ALARM / FIRE PUMP						
	Smoke Fire Dampers	M	M	E	FA	M
	Fire, flow switches, tamper switches	S	S	E	FA	M
	Fire Pump & Transfer Switch	S	S	E	E	S
	Duct Smoke Detectors	M	M	E	FA	FA
ELEVATOR						
	Elevator Sump & Controller	M	M	E	M	M
	Heat & smoke detectors in hoistway and elev room (if required)	FA	FA	N/A	FA	FA
	Elevator Shunt Trip	E	E	E	FA	E

Mechanical Contractor	M
Electrical Contractor	E
Plumbing Contractor	P
Sprinkler Contractor	S
Fire Alarm Contractor	FA
General Contractor	GC

ELECTRICAL TO PROVIDE FUSES PER MANUFACTURER SPECIFICATIONS FOR ALL EQUIPMENT.

COORDINATION MATRIX

SCALE: NONE

3

NOTE: NOT ALL ITEMS APPLY TO THIS PROJECT

BRANCH CIRCUIT VOLTAGE DROP
208/120 VOLT SINGLE PHASE CIRCUITS:

MAXIMUM #12 WIRE RUN LENGTHS WITH 2% MAXIMUM VOLTAGE DROP:	
KVA OF CIRCUIT	MAXIMUM FEEDER LENGTH IN FEET BEFORE WIRE MUST BE UPSIZED
0.0-0.1 KVA	1120 FT.
0.1-0.2 KVA	560 FT.
0.2-0.3 KVA	370 FT.
0.3-0.4 KVA	280 FT.
0.4-0.5 KVA	220 FT.
0.5-0.6 KVA	180 FT.
0.6-0.7 KVA	160 FT.
0.7-0.8 KVA	140 FT.
0.8-0.9 KVA	120 FT.
0.9-1.0 KVA	110 FT.
1.0-1.1 KVA	100 FT.
1.1-1.2 KVA	90 FT.
1.2-1.3 KVA	80 FT.
1.3-1.4 KVA	80 FT.
1.4-1.5 KVA	70 FT.
1.5-1.6 KVA	70 FT.
1.6-1.7 KVA	60 FT.
1.7-1.8 KVA	60 FT.
1.8-1.9 KVA	50 FT.
1.9-2.0 KVA	50 FT.

TABLE IS TO BE USED TO DETERMINE THE MAXIMUM RUN LENGTH FOR #12 GAUGE AL WIRE WHERE VOLTAGE DROP OF PANEL FEEDING CIRCUIT, AS LISTED IN ONE-LINE VOLTAGE DROP SCHEDULE, IS BETWEEN 2-3%. IF RUN IS LONGER THAN THAT SPECIFIED IN THIS TABLE FOR CIRCUIT'S KVA RATING, UPSIZE WIRE TO MAINTAIN VOLTAGE DROP

MAXIMUM #12 WIRE RUN LENGTHS WITH 3% MAXIMUM VOLTAGE DROP:	
KVA OF CIRCUIT	MAXIMUM FEEDER LENGTH IN FEET BEFORE WIRE MUST BE UPSIZED
0.0-0.1 KVA	1680 FT.
0.1-0.2 KVA	840 FT.
0.2-0.3 KVA	560 FT.
0.3-0.4 KVA	420 FT.
0.4-0.5 KVA	330 FT.
0.5-0.6 KVA	280 FT.
0.6-0.7 KVA	240 FT.
0.7-0.8 KVA	210 FT.
0.8-0.9 KVA	180 FT.
0.9-1.0 KVA	160 FT.
1.0-1.1 KVA	150 FT.
1.1-1.2 KVA	140 FT.
1.2-1.3 KVA	120 FT.
1.3-1.4 KVA	120 FT.
1.4-1.5 KVA	110 FT.
1.5-1.6 KVA	100 FT.
1.6-1.7 KVA	90 FT.
1.7-1.8 KVA	90 FT.
1.8-1.9 KVA	80 FT.
1.9-2.0 KVA	80 FT.

TABLE IS TO BE USED TO DETERMINE THE MAXIMUM RUN LENGTH FOR #12 GAUGE WIRE WHERE VOLTAGE DROP OF PANEL FEEDING CIRCUIT, AS LISTED IN ONE-LINE VOLTAGE DROP SCHEDULE, IS LESS THAN OR EQUAL TO 2%. IF RUN IS LONGER THAN THAT SPECIFIED IN THIS TABLE FOR CIRCUIT'S KVA RATING, UPSIZE WIRE TO MAINTAIN VOLTAGE DROP

VOLTAGE DROP TABLE

SCALE: NONE

4

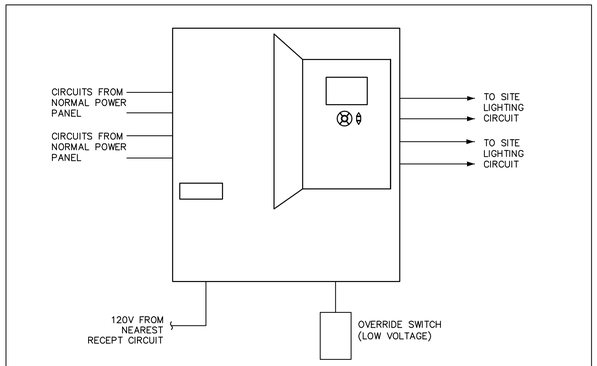

PROVIDE ONE PEANUT PANEL PER SERVICE.

LIGHTING CONTROL PANEL WITH ASTRONIMICAL TIME CLOCK TO SHUT OFF EXTERIOR LIGHTING, WITH OVERRIDE SWITCH FOR MAINTENANCE.

CONTROL DEVICES

WATTSTOPPER LP8S-G-115/277 WITH EM24A2

NOTES:

1. LIGHTING CONTROL SHALL BE IN A SINGLE ENCLOSURE.
2. CONTROL WIRING SHALL BE IN CONDUIT, 1/2"C (MIN).
3. SET TIMING SCHEDULE WITH OWNER FOR DIFFERENT ZONES (POOL DECK, COURTYARD, LANDSCAPING, BUILDING EXTERIOR)
4. IF MULTIPLE TIMECLOCKS, THEY ARE TO BE SYNCED TO TURN ON/OFF SIMULTANEOUSLY.
5. PROVIDE SEPARATE CONTROLS FOR EMERGENCY LIGHTING.

EXTERIOR LIGHTING DIAGRAM (TYP)

SCALE: NONE

2

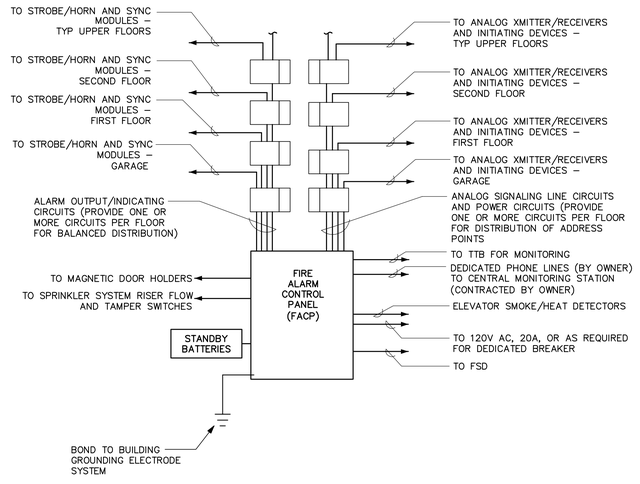

FIRE ALARM SYSTEM RISER:
FIRE ALARM SYSTEM SHOWN ON PLANS IS SCHEMATIC ONLY. FIRE ALARM SYSTEM DESIGN IS A DEFERRED APPROVAL PROCESS WITH LOCAL FIRE DEPARTMENT. CONTRACTOR SHALL BE RESPONSIBLE FOR SELECTION AND LAYOUT OF DEVICES AS PART OF THEIR DESIGN SUBMITTAL PROCESS.

NOTE: THIS DRAWING IS DIAGRAMMATIC AND TYPICAL, AND IS NOT INTENDED TO SHOW ALL CIRCUITS AND DEVICES THAT MAY BE REQUIRED.

FULL SYSTEM IS DESIGN/BUILD

FIRE ALARM SYSTEM NOTES:

SIGNAL INDICATING DEVICES SHALL COMPLY WITH ADA/NFPA 72/ANSI 117.1 CODES AND STANDARDS. INSTALLATION OF DEVICES SHALL CONFORM TO THE FOLLOWING REQUIREMENTS.

A. AUDIBLE SIGNALS SHALL BE CAPABLE OF BEING SILENCED WHILE VISUAL SIGNALS CONTINUE TO FLASH.

B. FIRE ALARM SYSTEM: PROVIDE TAMPER SWITCHES AND CONNECT TO FIRE ALARM CONTROL PANEL.

C. VISUAL SIGNALS SHALL BE SYNCHRONIZED WHEN MULTIPLE DEVICES ARE IN THE SAME FIELD OF VIEW.

D. APARTMENT UNIT SMOKE DETECTORS ARE NOT APART OF THE BUILDING FA SYSTEM.

E. APARTMENT UNIT SMOKE DETECTORS WHEN ACTUATED SHALL SOUND A LOCAL ALARM ONLY. APARTMENT UNIT SMOKE DETECTORS SHALL NOT CAUSE BUILDING GENERAL ALARM OR CAUSE OTHER APARTMENT UNIT DETECTORS TO SOUND.

F. IN ACCESSIBLE AND HEARING-IMPAIRED UNITS ONLY, PROVIDE BOTH FIRE ALARM HORN & STROBE DEVICES PER PLANS.

G. IF TENANT UNIT IS EQUIPPED WITH MORE THAN ONE SMOKE DETECTOR, AN ALARM FROM ONE DETECTOR SHALL CAUSE ALL OTHER DETECTORS TO SOUND AN ALARM WITHIN THE SAME TENANT UNIT. ALL ACCESSIBLE AND HEARING IMPAIRED ROOM STROBE/HORNS SHALL ALSO BE ACTIVATED WITHIN THAT UNIT.

H. PROVIDE VISUAL DEVICES IN HEARING-IMPAIRED UNITS IN ADDITION TO ADA ROOMS. VERIFY LOCATIONS WITH ARCHITECT.

I. ALL FIRE ALARM WIRING SYSTEM TO BE INSTALLED IN CONDUIT IF REQUIRED BY THE CITY.

J. ALL WORK SHALL BE PERFORMED PER CODE.

K. FIRE ALARM SYSTEM SHALL CONFORM TO CODE.

FIRE ALARM RISER DIAGRAM

SCALE: NONE

1

PYATOK
1611 TELEGRAPH AVE.
SUITE 200
OAKLAND, CA 94612
T. 510.465.7010 | F. 510.465.8575
www.pyatok.com

THE UNITY COUNCIL
1900 FRUITVALE AVE
#2A
OAKLAND, CA
94601

EMERALD CITY ENGINEERS, INC
21705 Highway 99 Lynnwood, WA
98036 425-741-1200 tel / 1201 fax

2700 INTERNATIONAL

OAKLAND, CA 94601

STAMP:

REGISTERED PROFESSIONAL ENGINEER — MICHAEL C. REYNOLDS — 21942 — EXP. 3-31-23 — ELECTRICAL — STATE OF CALIFORNIA — 12-09-22

ISSUE SCHEDULE

100 SD	5/11/22
50 DD	7/15/22
100 DD	9/16/22
PRICING SET	11/11/22
PERMIT SET	12/09/22

REVISION SCHEDULE

NO.	ISSUE	DATE

JOB NUMBER:	2049-008
DRAWN BY:	TH
CHECKED BY:	AF
ISSUE DATE:	12/09/2022
SCALE:	
TITLE:	

DETAILS AND DIAGRAMS

SHEET:

E6.03

PRELIMINARY - Not for Construction -

© 2019 PYATOK ARCHITECTURE & URBAN DESIGN

4/22/2022 6:28:22 PM

COPYRIGHT 2022, EMERALD CITY ENGINEERS, INC.
THOTHH J:\2049-008 2700 INTERNATIONAL, OAKLAND, CA\DWG\E003 DETAILS AND DIAGRAMS.DWG 11-29-2022 15:27

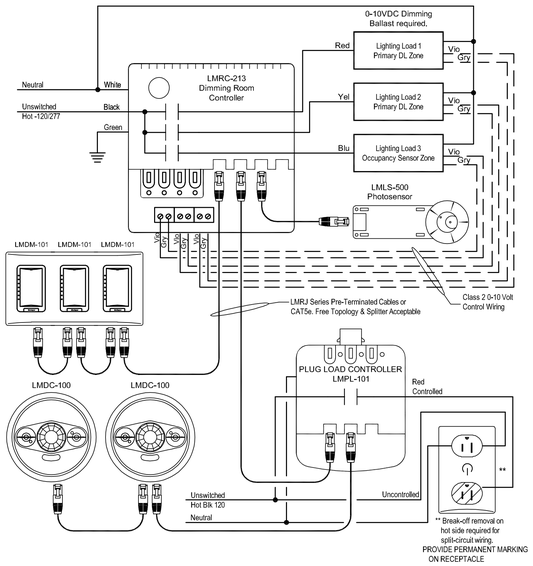

PROVIDE INTEGRATED LIGHTING AND POWER ROOM CONTROL SYSTEM. PROVIDE IN ALL ROOMS REQURING OCCUPANCY SENSOR, DAYLIGHT HARVESTING, DIMMING, AND/OR CONTROLLED RECEPTACLES. WATTSTOPPER DIGITAL LIGHTING MANAGEMENT SYSTEM OR EQUAL.

DETAIL IS DIAGRAMMATIC. PROVIDE ALL COMPONENTS FOR A FULLY FUNCTIONAL SYSTEM. CONTROLLERS TO BE LOCATED IN A JBOX THAT IS IN AN INCONSPICUOUS LOCATION AND ACCESSIBLE, EXACT LOCATION DETERMINED IN THE FIELD.

ENCLOSED ROOM & CORRIDOR LIGHTING & PLUG CONTROLS

WIRING DIAGRAM

SCALE: NONE

1

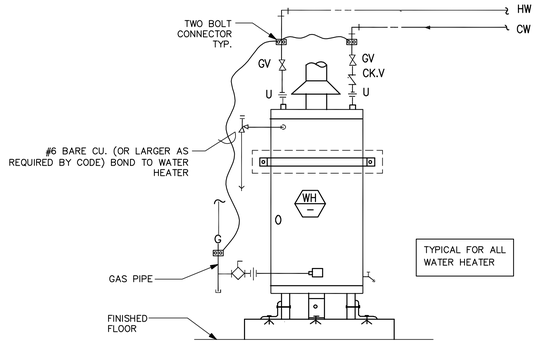

TYPICAL FOR ALL WATER HEATER

WATER HEATING GROUNDING

DETAIL

SCALE: NONE

2

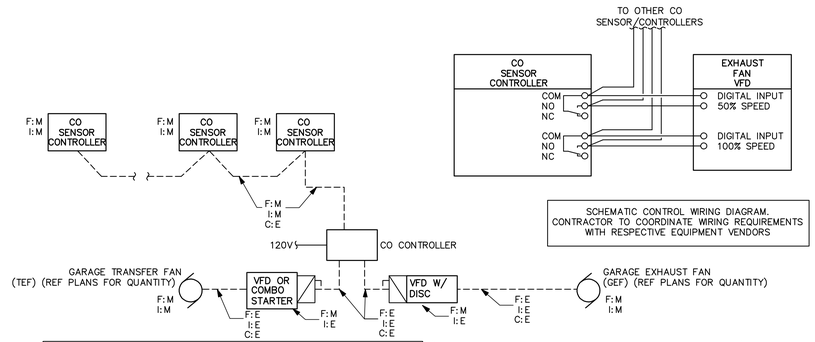

SCHEMATIC CONTROL WIRING DIAGRAM. CONTRACTOR TO COORDINATE WIRING REQUIREMENTS WITH RESPECTIVE EQUIPMENT VENDORS

NOTES:

1. WIRING DIAGRAM FOR GARAGE EXHAUST FANS. CONTRACTORS TO COORDINATE ALL REQUIRED WORK. DETAIL IS DIAGRAMMATIC AND WILL NEED TO BE CONFIRMED WITH THE MANUFACTURER'S SHOP DRAWING PROVIDED BY THE MECHANICAL CONTRACTOR.
2. ELECTRICAL CONTRACTOR SHALL PROVIDE CONDUIT FOR CO SYSTEM. ROUTE CONDUIT WITHIN CONCRETE SLAB WHERE POSSIBLE. CONFIRM ALL LOCATION AND CONDUIT PATHWAY WITH MECHANICAL.
3. REFER TO MECHANICAL PLANS FOR SEQUENCE OF OPERATION FOR FANS + PPM SETTINGS
4. REFER TO MECHANICAL PLANS FOR CO SENSOR/CONTROLLER LOCATIONS.
5. SYSTEM TO MEET THE REQUIREMENTS OF CMC 403.7.2 EXCEPTION 2, SYSTEM IS TO NOT HAVE ANY STROBES OR HORNS AS THIS IS NOT A CBC 915 CARBON MONOXIDE DETECTION SYSTEM (GARAGE IS EXEMPT), NO INTERCONNECTION TO FACP IS REQUIRED BY CODE.

LEGEND			
F: _	FURNISHED BY	E	ELECTRICAL CONTRACTOR
I: _	INSTALLED BY	M	MECHANICAL CONTRACTOR
C: _	CONDUIT BY	FA	FIRE ALARM CONTRACTOR
		------	CONTROL WIRING

CARBON MONOXIDE (CO) SENSOR CONTROLLER

PROVIDE COMBINATION CO SENSOR & CONTROLLER WITH LOW AND HIGH ADJUSTABLE ALARM POINT RELAYS.
-120VAC POWER SOURCE.
-DRY CONTACT ALARM RELAYS RATED FOR 5A @ 120V
-ADJUSTABLE TIME DELAYS AND ACTIVATION SETPOINTS
-ELECTROCHEMICAL CO SENSOR MOUNTED ON DEVICE
-PROVIDE AIRTEST TECHNOLOGIES #CT-1000 OR EQUIVALENT
-SET TIME DELAY TO 4 MINUTES

GARAGE EXHAUST FAN WIRING DIAGRAM

DETAIL

SCALE: NONE

3

PYATOK
1611 TELEGRAPH AVE.
SUITE 200
OAKLAND, CA 94612
T. 510.465.7010 | F. 510.465.8575
www.pyatok.com

THE UNITY COUNCIL
1900 FRUITVALE AVE
#2A
OAKLAND, CA
94601

EMERALD CITY ENGINEERS, INC
21705 Highway 99 Lynnwood, WA
98036 425-741-1200 tel / 1201 fax

2700 INTERNATIONAL

OAKLAND, CA 94601

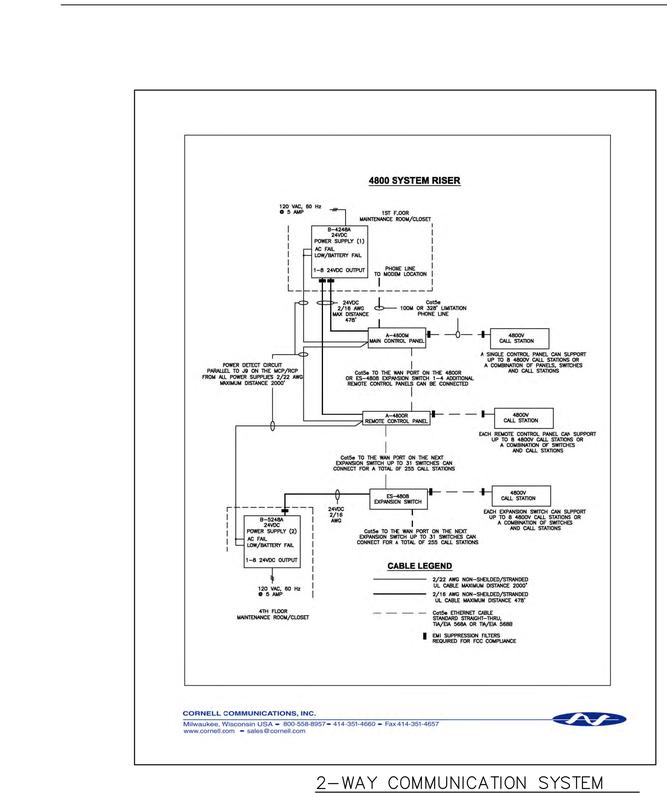

CORNELL COMMUNICATIONS, INC.
Milwaukee, Wisconsin USA ▪ 800-558-8957 ▪ 414-351-4660 ▪ Fax 414-351-4657
www.cornell.com ▪ sales@cornell.com

DESIGN/BUILD SYSTEM – SCOPE:
PROVIDE A 2-WAY COMMUNICATION PANEL WITH COMMUNICATION FROM MAIN BUILDING ENTRY LOBBY (OR LOBBIES) TO ALL REMOTE CALL STATIONS LOCATED AT EACH ELEVATOR LOBBY (AND AREAS OF REFUGE, IF APPLICABLE). SYSTEM SHALL DIRECTLY CALL 9-1-1 OR MONITORING LOCATION IF NO ATTENDANT PICKS UP. COORDINATE ALL REQUIREMENTS, LOCATIONS, AND QUANTITIES WITH LOCAL CODES AND THE FIRE DEPARTMENT PRIOR TO PURCHASE. CONTRACTOR IS RESPONSIBLE FOR SUBMITTING FULL PLANS FOR PERMITTING AND APPROVAL.
BASIS OF DESIGN: CORNELL RESCUE ASSISTANCE SERIES 4800 OR EQUIVALENT. PROVIDE TELEPHONE ACCESS KIT TAK-4202.
LOCATIONS: CONTRACTOR IS RESPONSIBLE FOR PROVIDING ALL NECESSARY LOCATIONS.
WIRING AND RACEWAY: WIRING FOR SYSTEM IS CIRCUIT CLASS B, LEVEL 3 PATHWAY SURVIVABILITY. PROVIDE TWO HOUR RATED CABLE (UL LISTED) INSTALLED IN CONDUIT. DO NOT ASSUME A 2-HR CHASE WILL BE PROVIDED. PENETRATIONS MUST BE SEALED IN A MANNER THAT PROVIDES A FIRE RESISTANCE RATING EQUIVALENT TO THE ENCLOSURE.

2-WAY COMMUNICATION SYSTEM
RESCUE ASSISTANCE ANNUNCIATOR
WIRING DIAGRAM (TYP)

SCALE: NONE

4

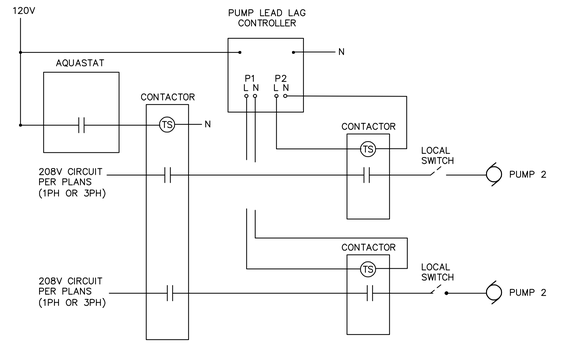

OPERATION: PUMP OPERATION TO BE CONTROLLED BY THE AQUASTAT. LEAD/LAG CONTROLLER TO ALTERNATE PUMP OPERATION. SET TO 7-DAY ROTATION (EX: PUMP 1 RUNS FOR 7 DAYS, PUMP 2 RUNS FOR 7 DAYS, ETC). MANUAL SWITCHES FOR MAINTENANCE ONLY.

CONTROL DEVICES	
CONTACTORS	CONTACTOR, 20A CONTACTS, NORMALLY-OPEN 120V COIL, NEMA 1. COMPACT, 2 OR 3 POLES (REF PLANS), 208-240VAC
AQUASTAT	FURNISHED AND INSTALLED BY PLUMBING CONTRACTOR. WIRING BY ELECTRICAL CONTRACTOR, POWER FROM NEARBY CONVENIENCE OUTLET.
PUMP LEAD LAG CONTROLLER	HEAT TIMER CORPORATION: PUMP-LEAD-LAG FURNISHED BY PLUMBING CONTRACTOR, INSTALLED BY ELECTRICAL CONTRACTOR. POWER FROM NEARBY CONVENIENCE OUTLET.

HOT WATER CIRC. CONTROLS
AQUASTAT & TIMER WIRING

DETAIL

SCALE: NONE

5

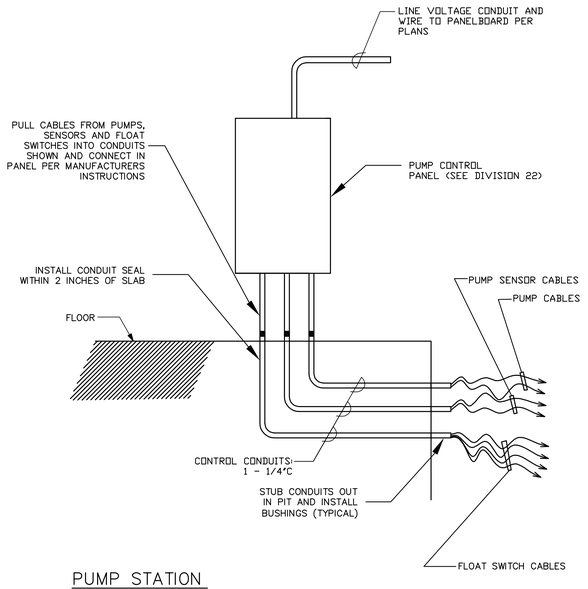

PUMP STATION

DIAGRAM

SCALE: NONE

6

STAMP:

REGISTERED PROFESSIONAL ENGINEER — TROY C. FRENCH — E19427 — EXP. 3-31-23 — ELECTRICAL — STATE OF CALIFORNIA
12-09-22

ISSUE SCHEDULE

100 SD	5/11/22
50 DD	7/15/22
100 DD	9/16/22
PRICING SET	11/11/22
PERMIT SET	12/09/22

REVISION SCHEDULE

NO.	ISSUE	DATE

JOB NUMBER:	2049-008
DRAWN BY:	TH
CHECKED BY:	AF
ISSUE DATE:	12/09/2022
SCALE:	
TITLE:	DETAILS AND DIAGRAMS

SHEET:

E6.04

PRELIMINARY - Not for Construction -

© 2019 PYATOK ARCHITECTURE & URBAN DESIGN

COPYRIGHT 2022, EMERALD CITY ENGINEERS, INC.
THU/NH J:\2049-008 2700 INTERNATIONAL, OAKLAND, CA\DWG\E604 DETAILS AND DIAGRAMS.DWG 11-29-2022 15:27
4/22/2022 6:28:22 PM

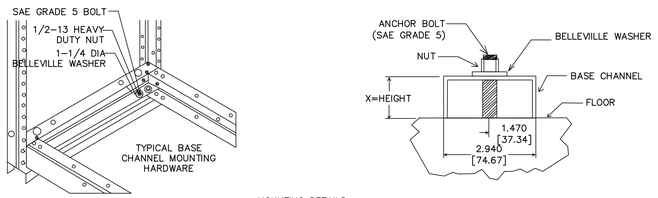

MOUNTING DETAILS

ANCHORING FOR SEISMIC RATING:
EACH SECTION MUST BE ANCHORED AT ALL LOCATIONS (REFER TO FLOOR PLANS AND ONELINE FOR QUANTITY OF SECTIONS). ANCHOR BOLT MOUNTING POINTS ARE 0.75 IN. DIAMETER HOLES LOCATED 1.50 IN. OR 3.00 IN. ABOVE THE BASE OF THE SECTION.

THE BELLEVILLE WASHER (SHOWN IN DETAIL ABOVE) USED FOR ANCHORING CONNECTIONS IS A TESTED COMPONENT AND IS REQUIRED TO MAINTAIN POSITION RETENTION OF THE EQUIPMENT. THE SLIP CRITICAL CONNECTION PERFORMANCE OF THE BOLTED CONNECTION WAS ESTABLISHED TO THE SHAKE TABLE TESTED SEISMIC CAPACITY OF THE EQUIPMENT AS SHOWN ON THE EQUIPMENT SEISMIC CERTIFICATE SUPPLIED AT THE TIME OF ORDER.

CENTER OF GRAVITY CALCULATIONS
ELEVATION CENTER OF GRAVITY: 55 IN. UP FROM FLOOR
VERTICAL CENTER OF GRAVITY: USE CENTERLINE OF SECTION FROM LEFT TO RIGHT
DEPTH OF GRAVITY: USE CENTERLINE OF THE SECTION FROM FRONT TO REAR.

WEIGHT
EACH SECTION OF SWITCHGEAR IS A MAXIMUM OF 1000 LBS EACH.

SWITCHGEAR ANCHORAGE DETAIL 1

SCALE: NONE

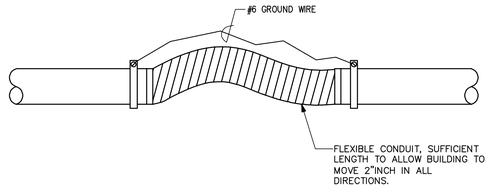

SEISMIC JOINT CONDUIT DETAIL 2

SCALE: NONE

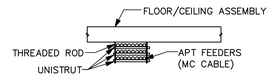

NOTES
1. ROUTE APARTMENT FEEDERS TIGHT TO CEILING WITH UNISTRUT AS SHOWN.
2. FOR MC CABLES, MAINTAIN A MINIMUM OF 1/4" SPACING BETWEEN CABLES.
3. PER CALIFORNIA ELECTRICAL CODE, MC CABLES MAY COME IN CONTACT FOR A MAXIMUM OF 24" BEFORE TEMPERATURE CORRECTION FACTORS HAVE TO BE ACCOUNTED FOR.

MC APARTMENT FEEDERS DETAIL 3

SCALE: NONE

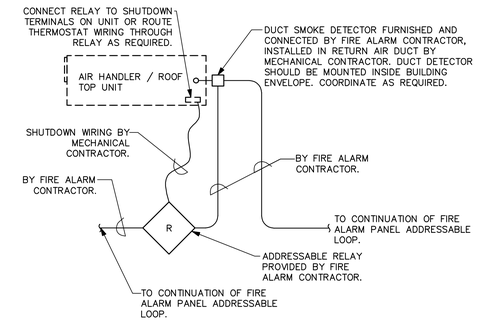

ROOF HVAC UNIT SHUTDOWN WIRING DIAGRAM 5

SCALE: NONE

1. SOLENOID VALVE (PROVIDE BY PLUMBING CONTRACTOR) TO BE CONTROLLED BY EMERGENCY PUSH BUTTON AND TIMER SWITCH. SOLENOID VALVE TO HAVE NORMALLY CLOSED OPERATION.
2. TIMER SWITCH: TORK SS403 (WITH CLEAR WEATHERPROOF COVER)
3. WIRE IN SERIES (AS SHOWN BELOW).
4. MOUNT ON POST OR NEARBY WALL (WITHIN SIGHT). CONFIRM WITH ARCHITECT

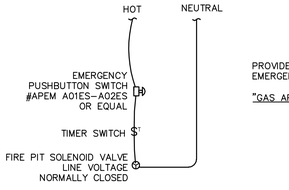

PROVIDE PERMANENT PLAQUE AT EMERGENCY SWITCH:

"GAS APPLIANCE EMERGENCY SHUTOFF"

CONTRACTOR TO REVIEW GAS FIRED APPLIANCE INSTALLATION GUIDE BEFORE PROCEEDING WITH ANY WIRING. THIS WIRING DIAGRAM AND COMPONENTS ARE TYPICAL IN NATURE AND NEED TO BE CONFIRMED ARE COMPATIBLE WITH THE SPECIFIC GAS APPLIANCE. ECE WILL ASSIST, RFI IF NECESSARY.

WIRING EXTERIOR GAS APPLIANCE 6

SCALE: NONE

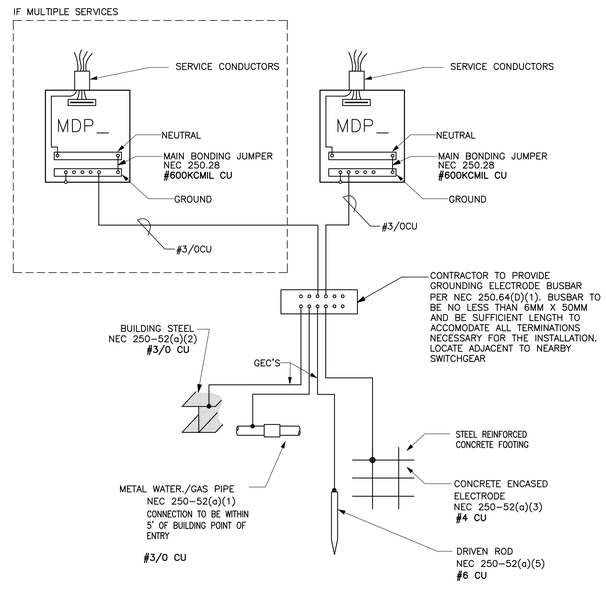

GROUNDING ELECTRODE SYSTEM DETAIL 7

SCALE: NONE

PYATOK
1611 TELEGRAPH AVE.
SUITE 200
OAKLAND, CA 94612
T. 510.465.7010 | F. 510.465.8575
www.pyatok.com

THE UNITY COUNCIL
1900 FRUITVALE AVE
#2A
OAKLAND, CA
94601

EMERALD CITY ENGINEERS, INC
21705 Highway 99 Lynnwood, WA
98036 425-741-1200 tel / 1201 fax

2700 INTERNATIONAL
OAKLAND, CA 94601

STAMP:

REGISTERED PROFESSIONAL ENGINEER — TIMOTHY C. FRENCH — E19427 — EXP. 3-31-23 — ELECTRICAL — STATE OF CALIFORNIA
12-09-22

ISSUE SCHEDULE

100 SD	5/11/22
50 DD	7/15/22
100 DD	9/16/22
PRICING SET	11/11/22
PERMIT SET	12/09/22

REVISION SCHEDULE

NO.	ISSUE	DATE

JOB NUMBER:	2049-008
DRAWN BY:	TH
CHECKED BY:	AF
ISSUE DATE:	12/09/2022
SCALE:	
TITLE:	DETAILS AND DIAGRAMS

SHEET:

E6.05

PRELIMINARY - Not for Construction -

© 2019 PYATOK ARCHITECTURE & URBAN DESIGN

4/22/2022 6:28:22 PM

COPYRIGHT 2022, EMERALD CITY ENGINEERS, INC.
THUYNH J:\2049-008 2700 INTERNATIONAL, OAKLAND, CA\DWG\E605 DETAILS AND DIAGRAMS.DWG 11-29-2022 15:27

STATE OF CALIFORNIA
Indoor Lighting
NRCC-LTI-E
CALIFORNIA ENERGY COMMISSION

CERTIFICATE OF COMPLIANCE			NRCC-LTI-E
This document is used to demonstrate compliance with requirements in §110.9, §110.12(c), §130.0, §130.1, §140.6 and §141.0(b)2 for indoor lighting scopes using the prescriptive path.			
Project Name:	2700 International	**Report Page:**	**(Page 1 of 10)**
Project Address:		**Date Prepared:**	2022-11-21T14:58:02-05:00

A. GENERAL INFORMATION

01	Project Location (city)	Oakland	04	Total Conditioned Floor Area (ft^2)	18,035
02	Climate Zone	3	05	Total Unconditioned Floor Area (ft^2)	13,266
03	Occupancy Types Within Project (select all that apply):		06	# of Stories (Habitable Above Grade)	6

• High-Rise Residential

B. PROJECT SCOPE

This table includes any lighting systems that are within the scope of the permit application and are demonstrating compliance using the prescriptive path outlined in §140.6 or §141.0(b)2 for alterations.

Scope of Work	Conditioned Spaces		Unconditioned Spaces	
01	02	03	04	05
My Project Consists of (check all that apply):	Calculation Method	Area (ft^2)	Calculation Method	Area (ft^2)
☒ New Lighting System	Area Category Method	18035	Area Category Method	13266
☐ New Lighting System - Parking Garage	N/A	0	N/A	0
Total Area of Work (ft^2)	18035		13266	

C. COMPLIANCE RESULTS

If any cell on this table says "DOES NOT COMPLY" or "COMPLIES with Exceptional Conditions" refer to Table D. for guidance.

Lighting in conditioned and unconditioned spaces must not be combined for compliance per §140.6(b)1	Allowed Lighting Power per §140.6(b) (Watts)							Adjusted Lighting Power per §140.6(a) (Watts)					Compliance Results
	01	02	03	04		05		06	07		08		09
	Complete Building §140.6(c)1	Area Category §140.6(c)2	Area Category Additional §140.6(c)2G (+)	Tailored §140.6(c)3 (+)	=	**Total Allowed** (Watts)	≥	Total Designed (Watts)	Adjustments: PAF Lighting Control Credits §140.6(a)2 (-)	=	**Total Adjusted** (Watts) *Includes Adjustments		**05 must be >= 08 §140.6**
	(See Table I)	(See Table I)	(See Table J)	(See Table K)				(See Table F)	(See Table P)				
Conditioned		10,539.35			=	10,539.35	≥	7,789		=	7789		COMPLIES
Unconditioned		2,139.3			=	2,139.3	≥	1,261.2		=	1261.2		COMPLIES

Registration Number: Generated Date/Time: Documentation Software: Energy Code Ace

CA Building Energy Efficiency Standards - 2019 Nonresidential Compliance Report Version: 2019.1.003 Schema Version: rev 20200601 Compliance ID: 77772 Report Generated: 2022-11-21 11:58:04

STATE OF CALIFORNIA
Indoor Lighting
NRCC-LTI-E
CALIFORNIA ENERGY COMMISSION

CERTIFICATE OF COMPLIANCE			NRCC-LTI-E
Project Name:	2700 International	**Report Page:**	**(Page 2 of 10)**
Project Address:		**Date Prepared:**	2022-11-21T14:58:02-05:00

C. COMPLIANCE RESULTS

Controls Compliance (See Table H for Details)	COMPLIES with Exceptional Conditions
Rated Power Reduction Compliance (See Table Q for Details)	

D. EXCEPTIONAL CONDITIONS

This table is auto-filled with uneditable comments because of selections made or data entered in tables throughout the form.

H. Indoor Lighting Controls (Not including PAFs) Permit Applicant Notes	[Corridor] {Shut-Off Controls} When unoccupied, dim to 50% -- [Elec/Mech Room (Conditioned)] {Multilevel Controls} Not Required: Space <100 ft² --- {Shut-Off Controls} Exception 4: Electrical equipment rooms -- [Elec/Mech Room (Unconditioned)] {Multilevel Controls} Not Required: Space <= 0.5 W/sf --- {Shut-Off Controls} Exception 4: Electrical equipment rooms -- [Restroom] {Multilevel Controls} EXCEPTION 2: Restrooms -- [Lobby] {Shut-Off Controls} Exception 1: Continuous use -- [Storage (Conditioned)] {Multilevel Controls} Not Required: Space <= 0.5 W/sf -- [Storage (Unconditioned)] {Multilevel Controls} Not Required: Space <= 0.5 W/sf -- [Parking] {Shut-Off Controls} When unoccupied, dim to 50%

E. ADDITIONAL REMARKS

This table includes remarks made by the permit applicant to the Authority Having Jurisdiction.

F. INDOOR LIGHTING FIXTURE SCHEDULE

This table includes all permanent designed lighting and all portable lighting in offices.

Designed Wattage: Conditioned Spaces

01	02	03	04	05	06	07	08	09	10	
Name or Item Tag	Complete Luminaire Description	Modular (Track) Fixture	Small Aperture & Color Change[1]	Watts per luminaire[2]	How is Wattage determined	Total Number of Luminaires	Excluded per §140.6(a)3	Design Watts	Field Inspector: Pass	Fail
F1	Surface Mounted Downlight	No	No	10	Mfr. Spec	181	No	1,810	☐	☐
F2	Recessed Linear Downlight	No	No	13	Mfr. Spec	74	No	962	☐	☐
F3	Pendant Downlight	No	No	15	Mfr. Spec	10	No	150	☐	☐

Registration Number: Generated Date/Time: Documentation Software: Energy Code Ace

CA Building Energy Efficiency Standards - 2019 Nonresidential Compliance Report Version: 2019.1.003 Schema Version: rev 20200601 Compliance ID: 77772 Report Generated: 2022-11-21 11:58:04

STATE OF CALIFORNIA
Indoor Lighting
NRCC-LTI-E
CALIFORNIA ENERGY COMMISSION

CERTIFICATE OF COMPLIANCE			NRCC-LTI-E
Project Name:	2700 International	**Report Page:**	**(Page 3 of 10)**
Project Address:		**Date Prepared:**	2022-11-21T14:58:02-05:00

F. INDOOR LIGHTING FIXTURE SCHEDULE

F4	Recessed Linear Asymmetric Wall Washer	No	No	8	Mfr. Spec	17	No	136	☐	☐
F5	Recessed Linear	No	No	64	Mfr. Spec	18	No	1,152	☐	☐
F6	Surface Linear Ambient Luminaire	No	No	7	Mfr. Spec	27	No	189	☐	☐
F6A	Surface Linear Ambient Luminaire	No	No	7	Mfr. Spec	162	No	1,134	☐	☐
F7A	Track Mounted Ambient Linear Downlgiht	No	No	25	Mfr. Spec	18	No	450	☐	☐
F7B	Track Mounted Fixed Downlight	No	No	9	Mfr. Spec	33	No	297	☐	☐
F9	Undercabinet Downlight	No	No	5	Mfr. Spec	25	No	125	☐	☐
F11	Recessed Fixed Round Downlight	No	No	12	Mfr. Spec	4	No	48	☐	☐
F11A	Recessed Fixed Round Downlight	No	No	12	Mfr. Spec	5	No	60	☐	☐
F12	Pendant Linear Downlight	No	No	35	Mfr. Spec	11	No	385	☐	☐
L2	LED Wrap	No	No	33	Mfr. Spec	14	No	462	☐	☐
L2E	LED Wrap	No	No	33	Mfr. Spec	13	No	429	☐	☐
							Total Designed Watts: CONDITIONED SPACES	7,789		

Designed Wattage: Unconditioned Spaces

01	02	03	04	05	06	07	08	09	10	
Name or Item Tag	Complete Luminaire Description	Modular (Track) Fixture	Small Aperture & Color Change[1]	Watts per luminaire[2]	How is Wattage determined	Total Number of Luminaires	Excluded per §140.6(a)3	Design Watts	Field Inspector: Pass	Fail
F6	Surface Linear Ambient Luminaire	No	No	7	Mfr. Spec	24	No	168	☐	☐
L2	LED Wrap	No	No	33	Mfr. Spec	10	No	330	☐	☐
L2E	LED Wrap	No	No	33	Mfr. Spec	6	No	198	☐	☐

Registration Number: Generated Date/Time: Documentation Software: Energy Code Ace

CA Building Energy Efficiency Standards - 2019 Nonresidential Compliance Report Version: 2019.1.003 Schema Version: rev 20200601 Compliance ID: 77772 Report Generated: 2022-11-21 11:58:04

STATE OF CALIFORNIA
Indoor Lighting
NRCC-LTI-E
CALIFORNIA ENERGY COMMISSION

CERTIFICATE OF COMPLIANCE			NRCC-LTI-E
Project Name:	2700 International	**Report Page:**	**(Page 4 of 10)**
Project Address:		**Date Prepared:**	2022-11-21T14:58:02-05:00

F. INDOOR LIGHTING FIXTURE SCHEDULE

P1	4' LED Strip	No	No	31.4	Mfr. Spec	18	No	565.2	☐	☐
							Total Designed Watts: UNCONDITIONED SPACES	1,261.2		

[1]*FOOTNOTE: Design Watts for small aperture and color changing luminaires which qualify per §140.6(a)4B is adjusted to be 75% of their rated wattage. Table F automatically makes this adjustment, the permit applicant should enter full rated wattage in column 05.*

[2]*Authority Having Jurisdiction may ask for Luminaire cut sheets to confirm wattage used for compliance per §130.0(c). Wattage used must be the maximum rated for the luminaire, not the lamp.*

G. MODULAR LIGHTING SYSTEMS

This section does not apply to this project.

H. INDOOR LIGHTING CONTROLS (Not including PAFs)

*This table includes lighting controls for conditioned and unconditioned spaces. When a control having a * is shown, the notes section of this table provides more detail on how compliance is achieved. The lighting controls section of the Compliance Summary Table on the first page will show "DOES NOT COMPLY" if the notes are left blank.*

Building Level Controls

01	02	03	
Mandatory Demand Response §110.12(c)	Shut-off controls §130.1(c)	Field Inspector: Pass	Fail
Not Required- Building <= 0.5W/SF	See Area/Space Level Controls	☐	☐

Registration Number: Generated Date/Time: Documentation Software: Energy Code Ace

CA Building Energy Efficiency Standards - 2019 Nonresidential Compliance Report Version: 2019.1.003 Schema Version: rev 20200601 Compliance ID: 77772 Report Generated: 2022-11-21 11:58:04

STATE OF CALIFORNIA
Indoor Lighting
NRCC-LTI-E
CALIFORNIA ENERGY COMMISSION

CERTIFICATE OF COMPLIANCE			NRCC-LTI-E
Project Name:	2700 International	**Report Page:**	**(Page 5 of 10)**
Project Address:		**Date Prepared:**	2022-11-21T14:58:02-05:00

H. INDOOR LIGHTING CONTROLS (Not including PAFs)

Area Level Controls

04	05	06	07	08	09	10	11	12	
Area Description	Complete Building or Area Category Primary Function Area	Area Controls §130.1(a)	Multi-Level Controls §130.1(b)	Shut-Off Controls §130.1(c)	Primary/Skylit Daylighting §130.1(d)	Secondary Daylighting §140.6(d)	Interlocked Systems §140.6(a)1	Field Inspector: Pass	Fail
Corridor	Corridor	Auth. Personnel	Dimmer	Partial Off*	N/A	N/A	No	☐	☐
Stairwell	Stairwell	Auth. Personnel	Bi-level Switch	Occupancy Sensor	N/A	N/A	No	☐	☐
Elec/Mech Room (Conditioned)	Electrical Mechancial Telephone Room	Manual ON/OFF	Exempt*	Exempt*	N/A	N/A	No	☐	☐
Elec/Mech Room (Unconditioned)	Electrical Mechancial Telephone Room	Manual ON/OFF	Exempt*	Exempt*	N/A	N/A	No	☐	☐
Restroom	Restroom	Manual ON/OFF	Exempt*	Occupancy Sensor	N/A	N/A	No	☐	☐
Office < 250	Office (<=250 square feet)	Manual ON/OFF	Dimmer	Occupancy Sensor	N/A	N/A	No	☐	☐
Office > 250	Office (> 250 square feet)	Manual ON/OFF	Dimmer	Occupancy Sensor	N/A	N/A	No	☐	☐
Lobby	Main Entry Lobby	Auth. Personnel	Dimmer	Exempt*	N/A	N/A	No	☐	☐
Storage (Conditioned)	All Other Space Types	Manual ON/OFF	Exempt*	Occupancy Sensor	N/A	N/A	No	☐	☐
Storage (Unconditioned)	All Other Space Types	Manual ON/OFF	Exempt*	Occupancy Sensor	N/A	N/A	No	☐	☐
Copy Room	Copy Room	Manual ON/OFF	Dimmer	Occupancy Sensor	N/A	N/A	No	☐	☐

Registration Number: Generated Date/Time: Documentation Software: Energy Code Ace

CA Building Energy Efficiency Standards - 2019 Nonresidential Compliance Report Version: 2019.1.003 Schema Version: rev 20200601 Compliance ID: 77772 Report Generated: 2022-11-21 11:58:04

STATE OF CALIFORNIA
Indoor Lighting
NRCC-LTI-E
CALIFORNIA ENERGY COMMISSION

CERTIFICATE OF COMPLIANCE			NRCC-LTI-E
Project Name:	2700 International	**Report Page:**	**(Page 6 of 10)**
Project Address:		**Date Prepared:**	2022-11-21T14:58:02-05:00

H. INDOOR LIGHTING CONTROLS (Not including PAFs)

Laundry	Laundry Area	Manual ON/OFF	Dimmer	Occupancy Sensor	N/A	N/A	No	☐	☐
Parking	Parking Garage - Parking Area	Auth. Personnel	Bi-level Switch	Partial Off*	N/A	N/A	No	☐	☐
Lounge	Lounge	Manual ON/OFF	Dimmer	Occupancy Sensor	N/A	N/A	No	☐	☐

*NOTES: Controls with a * require a note in the space below explaining how compliance is achieved.
EX: Conference 1: Primary/Skylight Daylighting: Exempt because less than 120 watts of general lighting; EXCEPTION 1 to §130.1(d)2

		13
		Plan Sheet Showing Daylit Zones:
Corridor	{Shut-Off Controls} When unoccupied, dim to 50%	
Elec/Mech Room (Conditioned)	{Multilevel Controls} Not Required: Space <100 ft² --- {Shut-Off Controls} Exception 4: Electrical equipment rooms	
Elec/Mech Room (Unconditioned)	{Multilevel Controls} Not Required: Space <= 0.5 W/sf --- {Shut-Off Controls} Exception 4: Electrical equipment rooms	
Restroom	{Multilevel Controls} EXCEPTION 2: Restrooms	
Lobby	{Shut-Off Controls} Exception 1: Continuous use	
Storage (Conditioned)	{Multilevel Controls} Not Required: Space <= 0.5 W/sf	
Storage (Unconditioned)	{Multilevel Controls} Not Required: Space <= 0.5 W/sf	
Parking	{Shut-Off Controls} When unoccupied, dim to 50%	

I. LIGHTING POWER ALLOWANCE: COMPLETE BUILDING OR AREA CATEGORY METHODS

Each area complying using the Complete Building or Area Category Methods per §140.6(b) are included in this table. Column 06 indicates if additional lighting power allowances per §140.6(c) or adjustments per §140.6(a) are being used.

Conditioned Spaces

Registration Number: Generated Date/Time: Documentation Software: Energy Code Ace

CA Building Energy Efficiency Standards - 2019 Nonresidential Compliance Report Version: 2019.1.003 Schema Version: rev 20200601 Compliance ID: 77772 Report Generated: 2022-11-21 11:58:04

4/22/2022 6:28:22 PM

COPYRIGHT 2022, EMERALD CITY ENGINEERS, INC.
THUYNH J:\2049-008 2700 INTERNATIONAL, OAKLAND, CA\DWG\E701 ENERGY CODE.DWG 11-29-2022 15:27

PYATOK
1611 TELEGRAPH AVE.
SUITE 200
OAKLAND, CA 94612
T. 510.465.7010 | F. 510.465.8575
www.pyatok.com

THE UNITY COUNCIL
1900 FRUITVALE AVE
#2A
OAKLAND, CA 94601

EMERALD CITY ENGINEERS, INC
21705 Highway 99 Lynnwood, WA 98036 425-741-1200 tel / 1201 fax

2700 INTERNATIONAL
OAKLAND, CA 94601

STAMP: REGISTERED PROFESSIONAL ENGINEER ADAM C. FRENCH E19421 EXP. 3-31-23 ELECTRICAL STATE OF CALIFORNIA 12-09-22

ISSUE SCHEDULE

100 SD	5/11/22
50 DD	7/15/22
100 DD	9/16/22
PRICING SET	11/11/22
PERMIT SET	12/09/22

REVISION SCHEDULE

NO.	ISSUE	DATE

JOB NUMBER: 2049-008
DRAWN BY: TH
CHECKED BY: AF
ISSUE DATE: 12/09/2022
SCALE:
TITLE:
ENERGY CODE

SHEET:
E7.01

PRELIMINARY - Not for Construction -

© 2019 PYATOK ARCHITECTURE & URBAN DESIGN

STATE OF CALIFORNIA
Indoor Lighting
NRCC-LTI-E
CALIFORNIA ENERGY COMMISSION

CERTIFICATE OF COMPLIANCE			NRCC-LTI-E
Project Name:	2700 International	Report Page:	(Page 7 of 10)
Project Address:		Date Prepared:	2022-11-21T14:58:02-05:00

I. LIGHTING POWER ALLOWANCE: COMPLETE BUILDING OR AREA CATEGORY METHODS

01	02	03	04	05	06	
Area Description	Complete Building or Area Category Primary Function Area	Allowed Density (W/ft²)	Area (ft²)	Allowed Wattage [Watts]	Additional Allowance / Adjustment	
					Area Category	PAF
Corridor	Corridor	0.6	9,722	5,833.2	No	No
Stairwell	Stairwell	0.5	3,116	1,558	No	No
Elec/Mech Room (Conditioned)	Electrical Mechancial Telephone Room	0.4	953	381.2	No	No
Restroom	Restroom	0.65	128	83.2	No	No
Office < 250	Office (<=250 square feet)	0.7	812	568.4	No	No
Office > 250	Office (> 250 square feet)	0.65	298	193.7	No	No
Lounge	Lounge	0.65	1,560	1,014	No	No
Lobby	Main Entry Lobby	0.85	617	524.45	No	No
Storage (Conditioned)	All Other Space Types	0.4	607	242.8	No	No
Laundry	Laundry Area	0.45	222	99.9	No	No
Copy Room	Copy Room	0.5	81	40.5	No	No
		TOTALS:	18,116	10,539.35	See Tables J, or P for detail	
Unconditioned Spaces						
01	02	03	04	05	06	
Area Description	Complete Building or Area Category Primary Function Area	Allowed Density (W/ft²)	Area (ft²)	Allowed Wattage [Watts]	Additional Allowance / Adjustment	
					Area Category	PAF
Elec/Mech Room (Unconditioned)	Electrical Mechancial Telephone Room	0.4	1,274	509.6	No	No
Storage (Unconditioned)	All Other Space Types	0.4	1,435	574	No	No
Parking	Parking Garage - Parking Area	0.1	10,557	1,055.7	No	No
		TOTALS:	13,266	2,139.3	See Tables J, or P for detail	

J. ADDITIONAL ALLOWANCE: AREA CATEGORY METHOD QUALIFYING LIGHTING SYSTEM

This section does not apply to this project.

STATE OF CALIFORNIA
Indoor Lighting
NRCC-LTI-E
CALIFORNIA ENERGY COMMISSION

CERTIFICATE OF COMPLIANCE			NRCC-LTI-E
Project Name:	2700 International	Report Page:	(Page 8 of 10)
Project Address:		Date Prepared:	2022-11-21T14:58:02-05:00

K. TAILORED METHOD GENERAL LIGHTING POWER ALLOWANCE

This section does not apply to this project.

L. ADDITIONAL LIGHTING ALLOWANCE: TAILORED WALL DISPLAY

This section does not apply to this project.

M. ADDITIONAL LIGHTING ALLOWANCE: TAILORED FLOOR AND TASK LIGHTING

This section does not apply to this project.

N. ADDITIONAL LIGHTING ALLOWANCE: TAILORED ORNAMENTAL/SPECIAL EFFECTS

This section does not apply to this project.

O. ADDITIONAL LIGHTING ALLOWANCE: TAILORED VERY VALUABLE MERCHANDISE

This section does not apply to this project.

P. POWER ADJUSTMENT: LIGHTING CONTROL CREDIT (POWER ADJUSTMENT FACTOR (PAF))

This section does not apply to this project.

Q. RATED POWER REDUCTION COMPLIANCE FOR ALTERATIONS

This section does not apply to this project.

R. 80% LIGHTING POWER FOR ALL ALTERATIONS - CONTROLS EXCEPTIONS

This section does not apply to this project.

S. DAYLIGHT DESIGN POWER ADJUSTMENT FACTOR (PAF)

This section does not apply to this project.

STATE OF CALIFORNIA
Indoor Lighting
NRCC-LTI-E
CALIFORNIA ENERGY COMMISSION

CERTIFICATE OF COMPLIANCE			NRCC-LTI-E
Project Name:	2700 International	Report Page:	(Page 9 of 10)
Project Address:		Date Prepared:	2022-11-21T14:58:02-05:00

T. DECLARATION OF REQUIRED CERTIFICATES OF INSTALLATION

Selections have been made based on information provided in this document. If any selection have been changed by permit applicant, an explanation should be included in Table E. Additional Remarks. These documents must be provided to the building inspector during construction and can be found online at https://www.energy.ca.gov/title24/2019standards/2019_compliance_documents/Nonresidential_Documents/NRCI/

Form/Title
NRCI-LTI-01-E - Must be submitted for all buildings
NRCI-LTI-02-E- Must be submitted for a lighting control system, or for an Energy Management Control System (EMCS), to be recognized for compliance.

U. DECLARATION OF REQUIRED CERTIFICATES OF ACCEPTANCE

Selections have been made based on information provided in this document. If any selection have been changed by the permit applicant, an explanation should be included in Table E. Additional Remarks. These documents must be provided to the building inspector during construction and only with "-A" in the form name must be completed through an Acceptance Test Technician Certification Provider (ATTCP). For more information visit: http://www.energy.ca.gov/title24/attcp/providers.html

Form/Title	Systems/Spaces To Be Field Verified
NRCA-LTI-02-A - Must be submitted for occupancy sensors and automatic time switch controls.	Stairwell; Restroom; Office < 250; Office > 250; Storage (Conditioned); Storage (Unconditioned); Copy Room; Laundry; Lounge

STATE OF CALIFORNIA
Indoor Lighting
NRCC-LTI-E
CALIFORNIA ENERGY COMMISSION

CERTIFICATE OF COMPLIANCE			NRCC-LTI-E
Project Name:	2700 International	Report Page:	(Page 10 of 10)
Project Address:		Date Prepared:	2022-11-21T14:58:02-05:00

DOCUMENTATION AUTHOR'S DECLARATION STATEMENT

I certify that this Certificate of Compliance documentation is accurate and complete.

Documentation Author Name: Adam French	Documentation Author Signature:
Company: Emerald City Engineers, Inc.	Signature Date: 11-21-22
Address: 21705 Hwy 99	CEA/ HERS Certification Identification (if applicable):
City/State/Zip: Lynnwood, WA, 98036	Phone: 425-741-1200

RESPONSIBLE PERSON'S DECLARATION STATEMENT

I certify the following under penalty of perjury, under the laws of the State of California:

1. The information provided on this Certificate of Compliance is true and correct.
2. I am eligible under Division 3 of the Business and Professions Code to accept responsibility for the building design or system design identified on this Certificate of Compliance (responsible designer)
3. The energy features and performance specifications, materials, components, and manufactured devices for the building design or system design identified on this Certificate of Compliance conform to the requirements of Title 24, Part 1 and Part 6 of the California Code of Regulations.
4. The building design features or system design features identified on this Certificate of Compliance are consistent with the information provided on other applicable compliance documents, worksheets, calculations, plans and specifications submitted to the enforcement agency for approval with this building permit application.
5. I will ensure that a completed signed copy of this Certificate of Compliance shall be made available with the building permit(s) issued for the building, and made available to the enforcement agency for all applicable inspections. I understand that a completed signed copy of this Certificate of Compliance is required to be included with the documentation the builder provides to the building owner at occupancy.

Responsible Designer Name: Adam French	Responsible Designer Signature:
Company: Emerald City Engineers, Inc.	Date Signed: 11-21-22
Address: 21705 Hwy 99	License: E19421
City/State/Zip: Lynnwood, WA, 98036	Phone: 425-741-1200

4/22/2022 6:28:22 PM

COPYRIGHT 2022, EMERALD CITY ENGINEERS, INC.
TH:\TH\ J:\2049-008 2700 INTERNATIONAL, OAKLAND, CA\DWG\E702 ENERGY CODE.DWG 11-29-2022 15:26

PYATOK
1611 TELEGRAPH AVE.
SUITE 200
OAKLAND, CA 94612
T. 510.465.7010 | F. 510.465.8575
www.pyatok.com

THE UNITY COUNCIL
1900 FRUITVALE AVE
#2A
OAKLAND, CA 94601

EMERALD CITY ENGINEERS, INC
21705 Highway 99 Lynnwood, WA
98036 425-741-1200 tel / 1201 fax

2700 INTERNATIONAL
OAKLAND, CA 94601

STAMP:
REGISTERED PROFESSIONAL ENGINEER
ROBERT C. FRENCH
E19421
EXP. 3-31-23
ELECTRICAL
STATE OF CALIFORNIA
12-09-22

ISSUE SCHEDULE

100 SD	5/11/22
50 DD	7/15/22
100 DD	9/16/22
PRICING SET	11/11/22
PERMIT SET	12/09/22

REVISION SCHEDULE

NO.	ISSUE	DATE

JOB NUMBER:	2049-008
DRAWN BY:	TH
CHECKED BY:	AF
ISSUE DATE:	12/09/2022
SCALE:	
TITLE:	ENERGY CODE

SHEET:
E7.02

PRELIMINARY - Not for Construction -

© 2019 PYATOK ARCHITECTURE & URBAN DESIGN

STATE OF CALIFORNIA
Outdoor Lighting
NRCC-LTO-E
CALIFORNIA ENERGY COMMISSION

CERTIFICATE OF COMPLIANCE			NRCC-LTO-E
Project Name:	2700 International	Report Page:	(Page 1 of 9)
Project Address:		Date Prepared:	2022-11-21T16:56:10-05:00

A. GENERAL INFORMATION

01	Project Location (city)	Oakland	04	Total Illuminated Hardscape Area (ft^2)	8254
02	Climate Zone	3			
03	Outdoor Lighting Zone per Title 24 Part 1 §10.114 or as designated by Authority Having Jurisdiction (AHJ):				
☐	LZ-0: Very Low - Undeveloped Parkland	☐ LZ-2: Moderate - Rural Areas	☐ LZ-4: High - Must be reviewed by CA Energy Commission for Approval		
☐	LZ-1: Low - Developed Parkland	☒ LZ-3: Moderately High - Urban Areas			

B. PROJECT SCOPE

This table includes outdoor lighting systems that are within the scope of the permit application and are demonstrating compliance using the prescriptive path outlined in §140.7 or §141.0(b)2I for alterations.

My Project Consists of:			
01		02	
☒	New Lighting System	Must Comply with Allowances from §140.7	
☐	Altered Lighting System	Is your alteration increasing the connected lighting load (Watts)? ◯ Yes ◯ No	
03		04	05
% of Existing Luminaires Being Altered[1]		Sum Total of Luminaires Being Added or Altered	Calculation Method
☐ < 10%	☐ >= 10% and < 50% ☐ >= 50%		

Please proceed to Table F. Outdoor Lighting Fixture Schedule to define the project's luminaires.

[1] *FOOTNOTES: % of Existing Luminaires Being Altered = (Sum Total of Luminaires Being Added or Altered / Existing Luminaires within the Scope of the Permit Application) x 100.*

Registration Number:
CA Building Energy Efficiency Standards - 2019 Nonresidential Compliance
Generated Date/Time:
Report Version: 2019.1.003
Schema Version: rev 20200601
Documentation Software: Energy Code Ace
Compliance ID: 77772
Report Generated: 2022-11-21 13:56:12

STATE OF CALIFORNIA
Outdoor Lighting
NRCC-LTO-E
CALIFORNIA ENERGY COMMISSION

CERTIFICATE OF COMPLIANCE			NRCC-LTO-E
Project Name:	2700 International	Report Page:	(Page 2 of 9)
Project Address:		Date Prepared:	2022-11-21T16:56:10-05:00

C. COMPLIANCE RESULTS

Results in this table are automatically calculated from data input and calculations in Tables F through I. Note: if any cell on this table says "COMPLIES with Exceptional Conditions" refer to Table D. Exceptional Conditions for guidance or see applicable Table referenced below.

Calculations of Total Allowed Lighting Power (Watts) §140.7 or §141.0(b)2I.													Compliance Results		
01		02		03		04		05		06		07		08	09
General Hardscape Allowance §140.7(d)1 (See Table I)	+	Per Application §140.7(d)2 (See Table J)	+	Sales Frontage §140.7(d)2 (See Table K)	+	Ornamental §140.7(d)2 (See Table L)	+	Per Specific Area §140.7(d)2 (See Table M)	OR	Existing Power Allowance §141.0(b)2I (See Table N)	=	Total Allowed (Watts)	≥	Total Actual (Watts)	07 must be >= 08
1,107.22	+	304	+	NA	+	NA	+	NA	OR	NA	=	1,411.22	≥	1,056.59	COMPLIES
Cutoff Compliance (See Table G for Details)															N/A
Controls Compliance (See Table H for Details)															COMPLIES with Exceptional Conditions

D. EXCEPTIONAL CONDITIONS

This table is auto-filled with uneditable comments because of selections made or data entered in tables throughout the form.

H. Outdoor Lighting Controls Applicant Notes	L2 Deck: E5A] (Motion Sensor Exemption) Less than 40 W
H. Outdoor Lighting Controls Applicant Notes	L2 Deck: E6] (Motion Sensor Exemption) Less than 40 W
H. Outdoor Lighting Controls Applicant Notes	L2 Deck: E7] (Motion Sensor Exemption) Less than 40 W
H. Outdoor Lighting Controls Applicant Notes	L2 Deck: E8] (Motion Sensor Exemption) Less than 40 W
H. Outdoor Lighting Controls Applicant Notes	L2 Deck: E9] (Motion Sensor Exemption) Less than 40 W

E. ADDITIONAL REMARKS

This table includes remarks made by the permit applicant to the Authority Having Jurisdiction.

Registration Number:
CA Building Energy Efficiency Standards - 2019 Nonresidential Compliance
Generated Date/Time:
Report Version: 2019.1.003
Schema Version: rev 20200601
Documentation Software: Energy Code Ace
Compliance ID: 77772
Report Generated: 2022-11-21 13:56:12

STATE OF CALIFORNIA
Outdoor Lighting
NRCC-LTO-E
CALIFORNIA ENERGY COMMISSION

CERTIFICATE OF COMPLIANCE			NRCC-LTO-E
Project Name:	2700 International	Report Page:	(Page 3 of 9)
Project Address:		Date Prepared:	2022-11-21T16:56:10-05:00

F. OUTDOOR LIGHTING FIXTURE SCHEDULE

For new or altered lighting systems demonstrating compliance with §140.7 all new luminaires being installed and any existing luminaires remaining or being moved within the spaces covered by the permit application are included in the Table below. For altered lighting systems using the Existing Power method per §141.0(b)2I, only new luminaires being installed and replacement luminaires being installed as part of the project scope are included (ie, existing luminaires remaining or existing luminaires being moved are not included).

Designed Wattage:

01	02		03	04	05	06	07	08	09	10	
Name or Item Tag	Complete Luminaire Description		Watts per luminaire[1,2]	How is Wattage determined	Total number luminaires[2]	Luminaire Status[3]	Excluded per §140.7(a)	Design Watts	Cutoff Req. > 6,200 initial lumen output §130.2(b)[4]	Field Inspector	
										Pass	Fail
E1	Surface Mount Cylinder Downlight	☐ Linear	5	Mfr. Spec	45	New	☐	225	NA: < 6200 lumens	☐	☐
E2	Wall Surface Facade LED	☐ Linear	20	Mfr. Spec	11	New	☐	220	NA: < 6200 lumens	☐	☐
E2A	Wall Surface Facade LED	☐ Linear	10	Mfr. Spec	4	New	☐	40	NA: < 6200 lumens	☐	☐
E3	Recessed Square Downlight	☐ Linear	12	Mfr. Spec	15	New	☐	180	NA: < 6200 lumens	☐	☐
E4	Wall Surface Downlight	☐ Linear	18	Mfr. Spec	5	New	☐	90	NA: < 6200 lumens	☐	☐
E5A	Catenary Mounted Downlight	☐ Linear	10	Mfr. Spec	12	New	☐	120	NA: < 6200 lumens	☐	☐
E6	Niche Mounted Linear Steplight	☐ Linear	1.4	Mfr. Spec	94	New	☐	131.6	NA: < 6200 lumens	☐	☐
E7	Recessed Wall Mounted Steplight	☐ Linear	5	Mfr. Spec	3	New	☐	15	NA: < 6200 lumens	☐	☐
E8	Stem Mounted Facade Uplight	☐ Linear	3	Mfr. Spec	7	New	☐	21	NA: < 6200 lumens	☐	☐
E9	Surface-mounted Flexible Barbeque Light	☐ Linear	7	Mfr. Spec	2	New	☐	14	NA: < 6200 lumens	☐	☐
							Total Design Watts:	1056.59			

Registration Number:
CA Building Energy Efficiency Standards - 2019 Nonresidential Compliance
Generated Date/Time:
Report Version: 2019.1.003
Schema Version: rev 20200601
Documentation Software: Energy Code Ace
Compliance ID: 77772
Report Generated: 2022-11-21 13:56:12

STATE OF CALIFORNIA
Outdoor Lighting
NRCC-LTO-E
CALIFORNIA ENERGY COMMISSION

CERTIFICATE OF COMPLIANCE			NRCC-LTO-E
Project Name:	2700 International	Report Page:	(Page 4 of 9)
Project Address:		Date Prepared:	2022-11-21T16:56:10-05:00

F. OUTDOOR LIGHTING FIXTURE SCHEDULE

For new or altered lighting systems demonstrating compliance with §140.7 all new luminaires being installed and any existing luminaires remaining or being moved within the spaces covered by the permit application are included in the Table below. For altered lighting systems using the Existing Power method per §141.0(b)2I, only new luminaires being installed and replacement luminaires being installed as part of the project scope are included (ie, existing luminaires remaining or existing luminaires being moved are not included).

Designed Wattage:

01	02	03	04	05	06	07	08	09	10

* NOTES: Selections with a * require a note in the notes below explaining how compliance is achieved.
EX: Luminaire is lighting a statue; EXCEPTION 2 to §130.2(b)

FOOTNOTES: Authority Having Jurisdiction may ask for Luminaire cut sheets to confirm wattage used for compliance per §130.0(c)
[1] *For linear luminaires, wattage should be indicated as W/ft instead of Watts/luminaire. Total linear feet should be indicated in column 05 instead of number of luminaires.*
[2] *Select "New" for new luminaires in a new outdoor lighting project, or for added luminaires in an alteration. Select "Altered" for replacement luminaires in an alteration. Select "Existing to Remain" for existing luminaires within the project scope that are not being altered and are remaining. Select "Existing Demolished" for existing luminaires which are being removed and reinstalled as part of the project scope.*
[3] *Compliance with mandatory cutoff requirements is required for luminaires with initial lumen output >= 6,200 unless exempted by §130.2(b)*

G. CUTOFF REQUIREMENTS [BUG]

This section does not apply to this project.

Registration Number:
CA Building Energy Efficiency Standards - 2019 Nonresidential Compliance
Generated Date/Time:
Report Version: 2019.1.003
Schema Version: rev 20200601
Documentation Software: Energy Code Ace
Compliance ID: 77772
Report Generated: 2022-11-21 13:56:12

STATE OF CALIFORNIA
Outdoor Lighting
NRCC-LTO-E
CALIFORNIA ENERGY COMMISSION

CERTIFICATE OF COMPLIANCE			NRCC-LTO-E
Project Name:	2700 International	Report Page:	(Page 5 of 9)
Project Address:		Date Prepared:	2022-11-21T16:56:10-05:00

H. OUTDOOR LIGHTING CONTROLS

This table demonstrates compliance with controls requirements for all new or altered luminaires installed as part of the permit application. For alteration projects, luminaires which are existing to remain (ie untouched) and luminaires which are removed and reinstalled (wiring only) do not need to be included in this table even if they are within the spaces covered by the permit application.
*When an option having a * is selected, the notes section of this table must be completed. The lighting controls section of the Compliance Summary Table on the first page will show "DOES NOT COMPLY" if the notes are left blank.*

Mandatory Controls

01	02	03	04	05	
Area Description	Shut-Off §130.2(c)1	Auto-Schedule §130.2(c)2	Motion Sensor §130.2(c)3	Field Inspector	
				Pass	Fail
L2 Deck: E5A	Astronomical Timer	Yes	Exempt*	☐	☐
L2 Deck: E6	Astronomical Timer	Yes	Exempt*	☐	☐
L2 Deck: E7	Astronomical Timer	Yes	Exempt*	☐	☐
L2 Deck: E8	Astronomical Timer	Yes	Exempt*	☐	☐
L2 Deck: E9	Astronomical Timer	Yes	Exempt*	☐	☐

** NOTES: Controls with a * require a note in the space below explaining how compliance is achieved.*
EX: Not permitted by health & safety to be turned off; EXCEPTION 1 to §130.2(b)

L2 Deck: E5A	(Motion Sensor Exemption) Less than 40 W
L2 Deck: E6	(Motion Sensor Exemption) Less than 40 W
L2 Deck: E7	(Motion Sensor Exemption) Less than 40 W
L2 Deck: E8	(Motion Sensor Exemption) Less than 40 W
L2 Deck: E9	(Motion Sensor Exemption) Less than 40 W

Registration Number:
CA Building Energy Efficiency Standards - 2019 Nonresidential Compliance
Generated Date/Time:
Report Version: 2019.1.003
Schema Version: rev 20200601
Documentation Software: Energy Code Ace
Compliance ID: 77772
Report Generated: 2022-11-21 13:56:12

STATE OF CALIFORNIA
Outdoor Lighting
NRCC-LTO-E
CALIFORNIA ENERGY COMMISSION

CERTIFICATE OF COMPLIANCE			NRCC-LTO-E
Project Name:	2700 International	Report Page:	(Page 6 of 9)
Project Address:		Date Prepared:	2022-11-21T16:56:10-05:00

I. LIGHTING POWER ALLOWANCE (per §140.7)

This table includes areas using allowance calculations per §140.7. General Hardscape Allowance is per Table 140.7-A while "Use it or lose it" Allowances are per Table 140.7-B. Indicate which allowances are being used to expand sections for user input. Luminaires that qualify for one of the "Use it or lose it" allowances shall not qualify for another "Use it or lose it" allowance.

01				
☒ General Hardscape Allowance Table I (below)	"Use it or lose it" Allowance (select all that apply) (select all that apply)			
	☒ Per Application Table J	☐ Sales Frontage Table K	☐ Ornamental Table L	☐ Per Specific Area Table M

Calculated General Hardscape Lighting Power Allowance per Table 140.7-A (LZ 0, 1 & 4)

This section does not apply to this project.

Calculated General Hardscape Lighting Power Allowance per Table 140.7-A (LZ 2 & 3)

02	03	04	05	06	07	08	9	10
		Area Wattage Allowance (AWA)			Area Wattage Allowance (AWA)			
Area Description	Surface Type	Illuminated Area (ft^2)	Allowed Density (W/ft^2)	Area Allowance (Watts)	Perimeter Length (ft)	Allowed Density (W/ft)	Linear Allowance (Watts)	Total General AWA = LWA (Watts)
L2 Deck	Concrete	5776	0.03	173.28	328	0.4	131.19	304.48
Building Perimeter	Concrete	2678	0.03	74.34	946	0.4	378.4	452.74
							Initial Wattage Allowance for Entire Site (Watts):	350
							Total General Hardscape Allowance (Watts):	1107.22

Registration Number:
CA Building Energy Efficiency Standards - 2019 Nonresidential Compliance
Generated Date/Time:
Report Version: 2019.1.003
Schema Version: rev 20200601
Documentation Software: Energy Code Ace
Compliance ID: 77772
Report Generated: 2022-11-21 13:56:12

PYATOK
1611 TELEGRAPH AVE.
SUITE 200
OAKLAND, CA 94612
T. 510.465.7010 | F. 510.465.8575
www.pyatok.com

THE UNITY COUNCIL
1900 FRUITVALE AVE
#2A
OAKLAND, CA 94601

EMERALD CITY ENGINEERS, INC
21705 Highway 99 Lynnwood, WA
98036 425-741-1200 tel / 1201 fax

2700 INTERNATIONAL
OAKLAND, CA 94601

STAMP:
REGISTERED PROFESSIONAL ENGINEER
TODD C. FRENCH
E19427
EXP. 3-31-23
ELECTRICAL
STATE OF CALIFORNIA
12-09-22

ISSUE SCHEDULE

100 SD	5/11/22
50 DD	7/15/22
100 DD	9/16/22
PRICING SET	11/11/22
PERMIT SET	12/09/22

REVISION SCHEDULE

NO.	ISSUE	DATE

JOB NUMBER:	2049-008
DRAWN BY:	TH
CHECKED BY:	AF
ISSUE DATE:	12/09/2022
SCALE:	
TITLE:	ENERGY CODE

SHEET:
E7.03

PRELIMINARY - Not for Construction -

© 2019 PYATOK ARCHITECTURE & URBAN DESIGN

4/22/2022 6:28:22 PM

COPYRIGHT 2022, EMERALD CITY ENGINEERS, INC.
THUYNH d:\2049-008 2700 INTERNATIONAL, OAKLAND, CA\DWG\E703 ENERGY CODE.DWG 11-29-2022 15:26

STATE OF CALIFORNIA
Outdoor Lighting
NRCC-LTO-E
CALIFORNIA ENERGY COMMISSION

CERTIFICATE OF COMPLIANCE			**NRCC-LTO-E**
Project Name:	2700 International	**Report Page:**	**(Page 7 of 9)**
Project Address:		**Date Prepared:**	2022-11-21T16:56:10-05:00

J. LIGHTING ALLOWANCE: PER APPLICATION

This table includes areas using the wattage allowance per application from Table 140.7-B .

01	02	03	04	05	06	07	08	09	10
		CALCULATED ALLOWANCE (Watts)			DESIGN WATTS				
Area Description	Application per Table 140.7-B[1]	# of Locations	Allowance per Location[2]	Extra Allowance (Watts)	Luminaire Name or Rem Tag	Watts per Luminaire	# of Luminaires	Design Watts	Additional Allowance (Watts)
Entry	Building Entrance/Exit	16	19	304	E2	20	11	220	304
					E2A	10	4	40	
					E4	18	6	108	
					Total Design Watts for this Area:			368	
					Total Allowance (Watts) All Areas:				304

[1] FOOTNOTES: Primary entrance applications are only available for senior care facilities, healthcare facilities, police stations, hospitals, fire stations, and emergency vehicle facilities
[2] The Allowance per Location for ATMs is 100W for the first ATM and 35W for each additional per Table 140.7-B .
[3] For luminaires indicated in Table E as linear, wattage in column 07 is W/ft instead of Watts/luminaire. Total linear feet should be indicated in column 08 instead of number of luminaires.

K. LIGHTING ALLOWANCE: SALES FRONTAGE

This section does not apply to this project.

L. LIGHTING ALLOWANCE: ORNAMENTAL

This section does not apply to this project.

M. LIGHTING ALLOWANCE: PER SPECIFIC AREA

This section does not apply to this project.

N. EXISTING CONDITIONS POWER ALLOWANCE (alterations only)

This section does not apply to this project.

Registration Number:
CA Building Energy Efficiency Standards - 2019 Nonresidential Compliance
Generated Date/Time:
Report Version: 2019.1.003
Schema Version: rev.20200501
Documentation Software: Energy Code Ace
Compliance ID: 77772
Report Generated: 2022-11-21 13:56:12

STATE OF CALIFORNIA
Outdoor Lighting
NRCC-LTO-E
CALIFORNIA ENERGY COMMISSION

CERTIFICATE OF COMPLIANCE			**NRCC-LTO-E**
Project Name:	2700 International	**Report Page:**	**(Page 8 of 9)**
Project Address:		**Date Prepared:**	2022-11-21T16:56:10-05:00

O. DECLARATION OF REQUIRED CERTIFICATES OF INSTALLATION

Selections have been made based on information provided in this document. If any selection have been changed by permit applicant, an explanation should be included in Table E. Additional Remarks. These documents must be provided to the building inspector during construction and can be found online at https://www.energy.ca.gov/title24/2019standards/2019_compliance_documents/Nonresidential_Documents/NRCI/

Form/Title
NRCI-LTO-01-E - Must be submitted for all buildings
NRCI-LTO-02-E- Must be submitted for a lighting control system, or for an Energy Management Control System (EMCS), to be recognized for compliance.

P. DECLARATION OF REQUIRED CERTIFICATES OF ACCEPTANCE

Selections have been made based on information provided in this document. If any selection have been changed by permit applicant, an explanation should be included in Table E. Additional Remarks. These documents must be provided to the building inspector during construction and must be completed through an Acceptance Test Technician Certification Provider (ATTCP). For more information visit: http://www.energy.ca.gov/title24/attcp/providers.html

Form/Title	Systems/Spaces To Be Field Verified
NRCA-LTO-02-A - Must be submitted for all outdoor lighting controls except for alterations where controls are added to <= 20 luminaires.	L2 Deck: ES4; L2 Deck: E6; L2 Deck: E7; L2 Deck: E8; L2 Deck: E9

Registration Number:
CA Building Energy Efficiency Standards - 2019 Nonresidential Compliance
Generated Date/Time:
Report Version: 2019.1.003
Schema Version: rev.20200501
Documentation Software: Energy Code Ace
Compliance ID: 77772
Report Generated: 2022-11-21 13:56:12

STATE OF CALIFORNIA
Outdoor Lighting
NRCC-LTO-E
CALIFORNIA ENERGY COMMISSION

CERTIFICATE OF COMPLIANCE			**NRCC-LTO-E**
Project Name:	2700 International	**Report Page:**	**(Page 9 of 9)**
Project Address:		**Date Prepared:**	2022-11-21T16:56:10-05:00

DOCUMENTATION AUTHOR'S DECLARATION STATEMENT

I certify that this Certificate of Compliance documentation is accurate and complete.

Documentation Author Name: Adam French	Documentation Author Signature:
Company: Emerald City Engineers, Inc.	Signature Date: 11-21-22
Address: 21705 Hwy 99	CEA/HERS Certification Identification (If applicable):
City/State/Zip: Lynnwood, WA, 98036	Phone: 425-741-1200

RESPONSIBLE PERSON'S DECLARATION STATEMENT

I certify the following under penalty of perjury, under the laws of the State of California:

1. The information provided on this Certificate of Compliance is true and correct.
2. I am eligible under Division 3 of the Business and Professions Code to accept responsibility for the building design or system design identified on this Certificate of Compliance (responsible designer)
3. The energy features and performance specifications, materials, components, and manufactured devices for the building design or system design identified on this Certificate of Compliance conform to the requirements of Title 24, Part 1 and Part 6 of the California Code of Regulations.
4. The building design features or system design features identified on this Certificate of Compliance are consistent with the information provided on other applicable compliance documents, worksheets, calculations, plans and specifications submitted to the enforcement agency for approval with this building permit application.
5. I will ensure that a completed signed copy of this Certificate of Compliance shall be made available with the building permit(s) issued for this building, and made available to the enforcement agency for all applicable inspections. I understand that a completed signed copy of this Certificate of Compliance is required to be included with the documentation the builder provides to the building owner at occupancy.

Responsible Designer Name: Adam French	Responsible Designer Signature:
Company: Emerald City Engineers, Inc.	Date Signed: 11-21-22
Address: 21705 Hwy 99	License: E19421
City/State/Zip: Lynnwood, WA, 98036	Phone: 425-741-1200

Registration Number:
CA Building Energy Efficiency Standards - 2019 Nonresidential Compliance
Generated Date/Time:
Report Version: 2019.1.003
Schema Version: rev.20200501
Documentation Software: Energy Code Ace
Compliance ID: 77772
Report Generated: 2022-11-21 13:56:12

PYATOK
1611 TELEGRAPH AVE.
SUITE 200
OAKLAND, CA 94612
T. 510.465.7010 | F. 510.465.8575
www.pyatok.com

THE UNITY COUNCIL
1900 FRUITVALE AVE
#2A
OAKLAND, CA 94601

EMERALD CITY ENGINEERS, INC
21705 Highway 99 Lynnwood, WA
98036 425-741-1200 tel / 1201 fax

2700 INTERNATIONAL
OAKLAND, CA 94601

STAMP:
REGISTERED PROFESSIONAL ENGINEER
ROBERT C. FRENCH
E19421
EXP. 3-31-23
ELECTRICAL
STATE OF CALIFORNIA
12-09-22

ISSUE SCHEDULE

100 SD	5/11/22
50 DD	7/15/22
100 DD	9/16/22
PRICING SET	11/11/22
PERMIT SET	12/09/22

REVISION SCHEDULE

NO.	ISSUE	DATE

JOB NUMBER:	2049-008
DRAWN BY:	TH
CHECKED BY:	AF
ISSUE DATE:	12/09/2022
SCALE:	
TITLE:	**ENERGY CODE**

SHEET:
E7.04

PRELIMINARY - Not for Construction -

© 2019 PYATOK ARCHITECTURE & URBAN DESIGN

4/22/2022 6:28:22 PM

COPYRIGHT 2022, EMERALD CITY ENGINEERS, INC.
THUYNH J:\2049-008 2700 INTERNATIONAL, OAKLAND, CA\DWG\E704 ENERGY CODE.DWG 11-29-2022 15:26

STATE OF CALIFORNIA
Electrical Power Distribution
NRCC-ELC-E
CALIFORNIA ENERGY COMMISSION

CERTIFICATE OF COMPLIANCE			NRCC-ELC-E
Project Name:	2700 International	Report Page:	(Page 1 of 6)
Project Address:		Date Prepared:	2022-11-21T17:34:03-05:00

This document is used to demonstrate compliance with mandatory requirements in §130.5, for electrical systems in newly constructed nonresidential, high-rise residential and hotel/motel occupancies. Additions and alterations to electrical service systems in these occupancies will also use this document to demonstrate compliance per §141.0(a) or §141.0(b)2F for alterations..

A. GENERAL INFORMATION

01	Project Location (city)	Oakland
02	Occupancy Types Within Project:	
• High-Rise Residential		

B. PROJECT SCOPE

This table includes electrical systems that are within the scope of the permit application.

01	02	03	04	05
Electrical Service Designation/Description	Scope of Work[1]	Rating (kVA)	Utility Provided Metering System Exception to §130.5(a) [2]	System subject to CA Elec Code Article 517 Exception to §130.5(a)and (b)
MDPB - L1 Electrical Room (Refer to E3.01)	New electrical service equipment and meter	900	☒	☐
06 Demand Response Controls	Where required, demand response controls must be specified which are capable of receiving and automatically responding to at least one standards based messaging protocol which enables demand response after receiving a demand response signal. Sections §120.2, §130.1 and §130.3 and compliance documents NRCC-MCH, NRCC-LTI and NRCC-LTS will indicate when demand response controls are required.			

FOOTNOTES: Adding only new feeders and branch circuits triggers Voltage Drop 130.5(c), no other requirements from 130.5 are required.
[2] Applicable if the utility company is providing a metering system that indicates instantaneous kW demand and kWh for a utility-defined period.

C. COMPLIANCE RESULTS

Results in this table are automatically calculated from data input and calculations in Tables K through L. Note: If any cell on this table says "COMPLIES with Exceptional Conditions" refer to Table D. Exceptional Conditions for guidance or see applicable Table referenced below.

01	AND	02	AND	03	AND	04	05
Service Electrical Metering §130.5(a) (See Table F)		Separation for Monitoring §130.5(b) (See Table G)		Voltage Drop §130.5(c) (See Table H)		Controlled Receptacles §130.5(d) (See Table I)	
	AND	Yes	AND	Yes	AND	Yes	COMPLIES with Exceptional Conditions

STATE OF CALIFORNIA
Electrical Power Distribution
NRCC-ELC-E
CALIFORNIA ENERGY COMMISSION

CERTIFICATE OF COMPLIANCE			NRCC-ELC-E
Project Name:	2700 International	Report Page:	(Page 2 of 6)
Project Address:		Date Prepared:	2022-11-21T17:34:03-05:00

D. EXCEPTIONAL CONDITIONS

This table is auto-filled with uneditable comments because of selections made or data entered in tables throughout the form.

Table B indicates the project is exempt from §130.5(a) Service Electrical Metering requirements because the utility company has provided the project a metering system that indicates instantaneous kW demand and kWh for a utility-defined period.

E. ADDITIONAL REMARKS

This table is includes remarks made by the permit applicant to the Authority Having Jurisdiction.

F. SERVICE ELECTRICAL METERING

This section does not apply to this project.

Registration Number: | Generated Date/Time: | Documentation Software: Energy Code Ace
CA Building Energy Efficiency Standards - 2019 Nonresidential Compliance | Report Version: 2019.1.003 Schema Version: rev 20200601 | Compliance ID: 77772 Report Generated: 2022-11-21 14:34:04

STATE OF CALIFORNIA
Electrical Power Distribution
NRCC-ELC-E
CALIFORNIA ENERGY COMMISSION

CERTIFICATE OF COMPLIANCE			NRCC-ELC-E
Project Name:	2700 International	Report Page:	(Page 3 of 6)
Project Address:		Date Prepared:	2022-11-21T17:34:03-05:00

G. SEPARATION OF ELECTRICAL CIRCUITS FOR ENERGY MONITORING

This table includes entirely new or complete replacement electrical power distribution systems to demonstrate compliance with §130.5(a). Any load types that are not included in the service do not need to be shown.

01	02	03	04	05	
Load Type per Table 130.5-B[1]	Minimum Required Separation of Loads per Table 130.5-B	Compliance Method[2]	Location of Requirements in Construction Documents	Field Inspector	
				Pass	Fail
MDPB - L1 Electrical Room (Refer to E3.01)					
Charging stations for electrical vehicle	All loads in aggregate	Method 1	Refer to E5.02	☐	☐
Domestic and service water systems	All loads in aggregate	Method 1	Refer to E5.02	☐	☐
Elevators, escalators, moving walkways	All loads in aggregate	Method 1	Refer to E5.02	☐	☐
HVAC systems and components	All HVAC in aggregate and each HVAC load rated at least 50 kVA	Method 1	Refer to E5.02	☐	☐
Industrial/Commercial Load Centers greater than or equal to 25kVA	All loads in aggregate	Method 1	Refer to E5.02	☐	☐
Lighting including exit, egress and exterior	All lighting disaggregated by floor, type or area	Method 1	Refer to E5.02	☐	☐
Plug Loads and appliances less than 25kVA	All plug loads separated by floor, type or area Groups of plug loads exceeding 25 kVA connected load in an area less than 5000 sf	Method 1	Refer to E5.02	☐	☐

** NOTES: If "Other**" is selected under Compliance Method above, please indicate how compliance has been achieved in the space provided below.*

FOOTNOTES: For each separate load type, up to 10% of the connected load may be of any type.
[2] Method 1: Switchboards/ motor control centers/ panelboard loads disaggregated for each load type.
Method 2: Switchboards/ motor control centers/ panelboard supply other distribution equipment with loads disaggregated for each load type.
Method 3: Branch circuits serve load types individually and provisions for adding future branch circuit monitoring.
Method 4: Complete metering system measures and reports loads by type.
See Chapter 8 of the Nonresidential Compliance Manual for more detail on Compliance Methods.

H. VOLTAGE DROP

This table includes entirely new or complete replacement electrical power distribution systems, or alterations that add, modify or replace both feeders and branch circuits to demonstrate compliance with §130.5(c). For alterations, only the altered circuits must demonstrate compliance per §141.0(b)2Piii

Registration Number: | Generated Date/Time: | Documentation Software: Energy Code Ace
CA Building Energy Efficiency Standards - 2019 Nonresidential Compliance | Report Version: 2019.1.003 Schema Version: rev 20200601 | Compliance ID: 77772 Report Generated: 2022-11-21 14:34:04

STATE OF CALIFORNIA
Electrical Power Distribution
NRCC-ELC-E
CALIFORNIA ENERGY COMMISSION

CERTIFICATE OF COMPLIANCE			NRCC-ELC-E
Project Name:	2700 International	Report Page:	(Page 4 of 6)
Project Address:		Date Prepared:	2022-11-21T17:34:03-05:00

H. VOLTAGE DROP

01	02		03	04	05	
Electrical Service Designation/Description	Combined Voltage Drop on Installed Feeder/Branch Circuit Conductors Compliance Method		Location of Voltage Drop Calculations[1]	Sheet Number for Voltage Drop Calculations in Construction Documents	Field Inspector	
					Pass	Fail
MDPB - L1 Electrical Room (Refer to E3.01)	☒ Voltage drop less than 5%	☐ Permitted by CA Elec Code (Exception to 130.5(c))*	In construction documents	Refer to E5.02	☐	☐

** NOTES: If "Permitted by CA Elec Code **" is selected under Compliance Method above, please indicate where the exception applies in the space provided below.*

[1] FOOTNOTES: Voltage drop calculations may be attached to the permit application outside the construction documents if allowed by the Authority Having Jurisdiction. Select "attached" if applicable. If calculations will be the responsibility of the installing contractor, select "Contractor Responsible".

I.CIRCUIT CONTROLS FOR 120-VOLT RECEPTACLES AND CONTROLLED RECEPTACLES

This table includes entirely new or complete replacement electrical power distribution systems to demonstrate compliance with §130.5(d). Both controlled and uncontrolled receptacles must be provided in office areas, lobbies, conference rooms, kitchen areas in office spaces, copy rooms and hotel/motel guest rooms.

01	02	03	04	05	06	
Room name or Description	Location/ Type of Controlled Receptacles	Shut-Off Controls	Permanent Durable Marking Will be Used	Location of Requirements in Construction Documents	Field Inspector	
					Pass	Fail
Lobby, Property Management rooms, Break room, Offices	Within 6ft of uncontrolled AND Split-wired receptacle	Occupancy Sensor	☒	Refer to E3.01	☐	☐

** NOTES: If "Other**" is selected under Shut-Off Controls above, please indicate how compliance has been achieved in the space provided below.*

J. DECLARATION OF REQUIRED CERTIFICATES OF INSTALLATION

Selections have been made based on information provided in this document. If any selection have been changed by permit applicant, an explanation should be included in Table E. Additional Remarks. These documents must be provided to the building inspector during construction and can be found online at https://www.energy.ca.gov/title24/2019standards/2019_compliance_documents/Nonresidential_Documents/NRCI/

Form/Title
NRCI-ELC-01-E - Must be submitted for all buildings

Registration Number: | Generated Date/Time: | Documentation Software: Energy Code Ace
CA Building Energy Efficiency Standards - 2019 Nonresidential Compliance | Report Version: 2019.1.003 Schema Version: rev 20200601 | Compliance ID: 77772 Report Generated: 2022-11-21 14:34:04

STATE OF CALIFORNIA
Electrical Power Distribution
NRCC-ELC-E
CALIFORNIA ENERGY COMMISSION

CERTIFICATE OF COMPLIANCE			NRCC-ELC-E
Project Name:	2700 International	Report Page:	(Page 5 of 6)
Project Address:		Date Prepared:	2022-11-21T17:34:03-05:00

K. DECLARATION OF REQUIRED CERTIFICATES OF ACCEPTANCE

There are no Certificates of Acceptance applicable to electrical power distribution requirements.

Registration Number: | Generated Date/Time: | Documentation Software: Energy Code Ace
CA Building Energy Efficiency Standards - 2019 Nonresidential Compliance | Report Version: 2019.1.003 Schema Version: rev 20200601 | Compliance ID: 77772 Report Generated: 2022-11-21 14:34:04

STATE OF CALIFORNIA
Electrical Power Distribution
NRCC-ELC-E
CALIFORNIA ENERGY COMMISSION

CERTIFICATE OF COMPLIANCE			NRCC-ELC-E
Project Name:	2700 International	Report Page:	(Page 6 of 6)
Project Address:		Date Prepared:	2022-11-21T17:34:03-05:00

DOCUMENTATION AUTHOR'S DECLARATION STATEMENT

I certify that this Certificate of Compliance documentation is accurate and complete.

Documentation Author Name: Adam French	Documentation Author Signature:
Company: Emerald City Engineers, Inc.	Signature Date: 11-21-22
Address: 21705 Hwy 99	CEA/ HERS Certification Identification (if applicable):
City/State/Zip: Lynnwood, WA, 98036	Phone: 425-741-1200

RESPONSIBLE PERSON'S DECLARATION STATEMENT

I certify the following under penalty of perjury, under the laws of the State of California:

1. The information provided on this Certificate of Compliance is true and correct.
2. I am eligible under Division 3 of the Business and Professions Code to accept responsibility for the building design or system design identified on this Certificate of Compliance (responsible designer)
3. The energy features and performance specifications, materials, components, and manufactured devices for the building design or system design identified on this Certificate of Compliance conform to the requirements of Title 24, Part 1 and Part 6 of the California Code of Regulations.
4. The building design features or system design features identified on this Certificate of Compliance are consistent with the information provided on other applicable compliance documents, worksheets, calculations, plans and specifications submitted to the enforcement agency for approval with this building permit application.
5. I will ensure that a completed signed copy of this Certificate of Compliance shall be made available with the building permit(s) issued for the building, and made available to the enforcement agency for all applicable inspections. I understand that a completed signed copy of this Certificate of Compliance is required to be included with the documentation the builder provides to the building owner at occupancy.

Responsible Designer Name: Adam French	Responsible Designer Signature:
Company: Emerald City Engineers, Inc.	Date Signed: 11-21-22
Address: 21705 Hwy 99	License: E19421
City/State/Zip: Lynnwood, WA, 98036	Phone: 425-741-1200

Registration Number: | Generated Date/Time: | Documentation Software: Energy Code Ace
CA Building Energy Efficiency Standards - 2019 Nonresidential Compliance | Report Version: 2019.1.003 Schema Version: rev 20200601 | Compliance ID: 77772 Report Generated: 2022-11-21 14:34:04

PYATOK
1611 TELEGRAPH AVE.
SUITE 200
OAKLAND, CA 94612
T. 510.465.7010 | F. 510.465.8575
www.pyatok.com

THE UNITY COUNCIL
1900 FRUITVALE AVE
#2A
OAKLAND, CA 94601

EMERALD CITY ENGINEERS, INC
21705 Highway 99 Lynnwood, WA 98036 425-741-1200 tel / 1201 fax

2700 INTERNATIONAL
OAKLAND, CA 94601

STAMP:

REGISTERED PROFESSIONAL ENGINEER — ADAM C. FRENCH — E19421 — EXP. 3-31-23 — ELECTRICAL — STATE OF CALIFORNIA — 12-09-22

ISSUE SCHEDULE

100 SD	5/11/22
50 DD	7/15/22
100 DD	9/16/22
PRICING SET	11/11/22
PERMIT SET	12/09/22

REVISION SCHEDULE

NO.	ISSUE	DATE

JOB NUMBER:	2049-008
DRAWN BY:	TH
CHECKED BY:	AF
ISSUE DATE:	12/09/2022
SCALE:	
TITLE:	ENERGY CODE

SHEET:

E7.05

PRELIMINARY - Not for Construction -

© 2019 PYATOK ARCHITECTURE & URBAN DESIGN

4/22/2022 6:28:22 PM

COPYRIGHT 2022, EMERALD CITY ENGINEERS, INC.
TH/YNH J:\2049-008 2700 INTERNATIONAL, OAKLAND, CA\DWG\E705 ENERGY CODE.DWG 11-29-2022 15:26

STATE OF CALIFORNIA
SIGN LIGHTING CEC-NRCC-LTS-01-E (Revised 08/15)
CALIFORNIA ENERGY COMMISSION

CERTIFICATE OF COMPLIANCE	NRCC-LTS-01-E
Sign Lighting	(Page 1 of 5)
Project Name: 2700 INTERNATIONAL	Date Prepared: 12/01/22

A. General Information

Project Address: 2700 INTERNATIONAL OAKLAND, CA 94601

Location of Sign	☑ Outdoor Signs	☐ Indoor Signs		
Phase of Sign Construction	☑ New Signs	☐ Sign Alterations		
Type of Lighting Control	☑ New Lighting Controls	☐ Replaced Lighting Controls	☐ Not Installing Lighting Controls	

This Certificate of Compliance includes the following components (check all that apply)
☑ Mandatory Measures (Lighting Controls) ☐ Maximum Allowed Lighting Power ☐ Specific Lighting Sources

1. Mandatory Sign Lighting Controls

NOTES:

1. *The same responsible person may install both the sign lighting power and the sign lighting controls, or a different responsible person may install the sign lighting controls than the responsible person installing the sign lighting power.*
2. *The Mandatory Measures (sign lighting controls) are required for compliance with the sign lighting Standards. If the person responsible for installing the sign lighting power is not also responsible for the sign lighting controls, then the owner of the sign, general contractor, or architect shall be responsible to have the sign lighting controls installed.*
3. *If more than one person has responsibility for compliance, each responsible person shall prepare and sign a Certificate of Compliance and an Installation Certificate applicable to the portion of construction for which they are responsible; alternatively, the person with chief responsibility for construction shall prepare and sign the Certificate of Compliance Declaration Statement for the entire construction.*

1a. Statements of Responsibility

Any person signing the Certificate of Compliance Declaration Statement on this NRCC-LTS-01-E shall complete Part 1a. Check Yes or No for all of the following statements:

1	I have responsibility for installing the sign lighting controls	○ Yes, complete parts 1a and 1b of this form ◉ No, complete part 1a of this form
2	There are no existing sign lighting controls and I will be installing compliant sign lighting controls	○ Yes ◉ No
3	There are no existing sign lighting controls and someone else will be responsible to install compliant sign lighting controls	◉ Yes ○ No
4	There are existing sign lighting controls that do not comply with the applicable provision of §110.9 and §130.3 and I will be installing compliant sign lighting controls	○ Yes ◉ No
5	There are existing sign lighting controls that do not comply with the applicable provision of §110.9 and §130.3 and someone else will be responsible to install compliant sign lighting controls	○ Yes ◉ No

STATE OF CALIFORNIA
SIGN LIGHTING CEC-NRCC-LTS-01-E (Revised 08/15)
CALIFORNIA ENERGY COMMISSION

CERTIFICATE OF COMPLIANCE	NRCC-LTS-01-E
Sign Lighting	(Page 2 of 5)
Project Name: 2700 INTERNATIONAL	Date Prepared: 12/01/22

1b. Mandatory Sign Lighting Controls

If the person signing the Certificate of Compliance Declaration Statement on this NRCC-LTS-01-E is responsible for complying with the sign lighting control requirements, that person shall answer all of the following questions:

If there are construction documents, indicate where on the building plans the mandatory measures (sign lighting control) note block can be located:

		Y	N	NA
1	**§130.3(a)1. All indoor sign lighting** is controlled with an automatic time-switch control or astronomical time-switch control.	○	○	○
2	**§130.3(a)2A. All outdoor sign lighting** is controlled with a photocontrol in addition to an automatic time-switch control, or an astronomical time-switch control.	○	○	○
	EXCEPTION to Section 130.3(a)2A: Outdoor signs in tunnels, and signs in large permanently covered outdoor areas that are intended to be continuously lit, 24 hours per day and 365 days per year.		○	○
3	**§130.3(a)2B. All outdoor sign lighting** that is ON both day and night is controlled with a dimmer that provides the ability to automatically reduce sign lighting power by a minimum of 65 percent during nighttime hours. Signs that are illuminated at night and for more than 1 hour during daylight hours shall be considered ON both day and night.	○	○	○
	EXCEPTION to Section 130.3(a)2B: Outdoor signs in tunnels and large covered areas that are intended to be illuminated both day and night.		○	○
4	**§130.3(a)3. Demand Responsive Electronic Message Center Control.** An Electronic Message Center (EMC) having a new connected lighting power load greater than 15 kW has a control installed that is capable of reducing the lighting power by a minimum of 30 percent when receiving a demand response signal.	○	○	○
	EXCEPTION to Section 130.3(a)3: Lighting for EMCs that is not permitted by a health or life safety statute, ordinance, or regulation to be reduced by 30 percent.		○	○

Field Inspector Notes:

STATE OF CALIFORNIA
SIGN LIGHTING CEC-NRCC-LTS-01-E (Revised 08/15)
CALIFORNIA ENERGY COMMISSION

CERTIFICATE OF COMPLIANCE	NRCC-LTS-01-E
Sign Lighting	(Page 3 of 5)
Project Name: 2700 INTERNATIONAL	Date Prepared: 12/01/22

2. Maximum Allowed Lighting Power Method of Compliance

Certificate of Compliance and Field Inspection Energy Checklist
Complete this part if there are signs using the maximum allowed lighting power method of compliance. (Complete part 3 of this Certificate of Compliance if there are signs using the Specific lighting sources method of compliance)

A	B	C	D	E	F	G	H	I	J
Symbol or Code	Description of the Sign	OPTIONAL – Energy Verified Label (see instructions below)	Allotted Watts				Design Watts	Complies Y/N	Field Inspector Check that sign complies
			Sign Area (ft²)	Internally (I) or Externally (E) Illuminated	Allowed LPD (I = 12 W/ft²) (E = 2.5 W/ft²)	Allowed Watts (D x F)	Total installed watts for sign	Complies if H ≤ G	✓
		✓							✓
		☐				0.00			☐
		☐				0.00			☐
		☐				0.00			☐
		☐				0.00			☐
		☐				0.00			☐
		☐				0.00			☐
		☐				0.00			☐
		☐				0.00			☐
		☐				0.00			☐
		☐				0.00			☐
		☐				0.00			☐

A	Symbol or code used on the plans (when plans are required) and other documents.
B	A description of the sign, or location of sign on the building; and the location of sign on construction documents.
C	OPTIONAL - Check this box only if this sign has a permanent, pre-printed, factory-installed, ENERGY VERIFIED label, confirming that the sign complies with the Section 140.8 of the California 2013 Title 24, Part 6 Standards, using the Maximum Allowed Lighting Power method of compliance. The only labels that will be recognized for this purpose are ENERGY VERIFIED Certification Marks authorized by Underwriters Laboratories (UL) or other Product Certification Body accredited to ISO/IEC Guide 65 by the American National Standards Institute in accordance with ISO/IEC 17011. Surveillance by the Accredited Certification Body shall be an ongoing annual inspection program carried out by a Type A Inspection body in accordance with ISO/IEC 17020. For signs with such an ENERGY VERIFIED label, columns 'D' through 'I' are not required to be filled out. Note: Using an ENERGY VERIFIED label is an optional method to validate compliance. An ENERGY VERIFIED label is not needed for compliance.
D	The sign area in square feet.
E	List "I" if the sign is internally illuminated. List "E" if the sign is externally illuminated.
F	Allowed watts per square foot. Enter 12 if the sign is listed as "I" in column E. Enter 2.3 if sign is listed as "E" in column E.
G	Multiply the square footage in column D times the allowed Lighting Power Density (LPD = watts) in column F.
H	Show the total installed watts in the sign, as determined according to the applicable provisions of §130(c).
I	Enter Y if the number in column H is less than or equal to the number in column G. Otherwise, the sign does not comply.
J	This page doubles as a field inspection checklist.

Field Inspector Notes:

STATE OF CALIFORNIA
SIGN LIGHTING CEC-NRCC-LTS-01-E (Revised 08/15)
CALIFORNIA ENERGY COMMISSION

CERTIFICATE OF COMPLIANCE	NRCC-LTS-01-E
Sign Lighting	(Page 4 of 5)
Project Name: 2700 INTERNATIONAL	Date Prepared: 12/01/22

3. Specific Lighting Source Method of Compliance

Certificate of Compliance and Field Inspection Energy Checklist
Complete this part if there are signs using the Specific lighting source method of compliance. (Complete part 2 of this Certificate of Compliance if there are signs using the maximum allowed lighting power method of compliance)

A	B	C	D	E
Symbol or Code	Description	**OPTIONAL** ENERGY VERIFIED label (see instructions below)	Specific light source used for compliance Shall include only lighting technologies listed below List all that apply	Field Inspector Check that Sign Complies ✓
		☐		☐
		☐		☐
		☐		☐
		☐		☐
		☐		☐

A		Symbol or code used on the plans (when plans are required) and other documents.
B		A narrative description of the sign, or location of sign on the building; and the location of sign on construction documents
C		OPTIONAL - Check this box only if this sign has a permanent, pre-printed, factory-installed ENERGY VERIFIED label, confirming that this sign complies with the Section 140.8 of the California 2013 Title 24, Part 6 Standards, using the Specific Lighting Source Method of Compliance. The only labels that will be recognized for this purpose are ENERGY VERIFIED Certification Marks authorized by Underwriters Laboratories (UL) or other Product Certification Body accredited to ISO/IEC Guide 65 by the American National Standards Institute in accordance with ISO/IEC 17011. Surveillance by the Accredited Certification Body shall be an ongoing annual inspection program carried out by a Type A Inspection body in accordance with ISO/IEC 17020. For signs with such an ENERGY VERIFIED label, column 'D' is not required to be filled out. Note: Using an ENERGY VERIFIED label is an optional method to validate compliance. An ENERGY VERIFIED label is not needed for compliance.
D		Specific Light Source Compliance Method. The sign(s) identified above use only the following lighting technologies: List all applicable numbers (1 through 9) that apply in column D above for each row.
	1	High pressure sodium lamps
	2	Metal halide lamps that are pulse start or ceramic served by a ballast that has a minimum efficiency of 88 percent or greater. Ballast efficiency is the measured output wattage to the lamp divided by the measured operating input wattage when tested according to ANSI C82.6-2005.
	3	Metal halide lamps that are pulse start that are 320 watts or smaller, are not 250 watt or 175 watt lamps, and are served by a ballast that has a minimum efficiency of 80 percent. Ballast efficiency is the measured output wattage to the lamp divided by the measured operating input wattage when tested according to ANSI C82.6-2005.
	4	Neon or cold cathode lamps with transformer or power supply efficiency greater than or equal to a minimum efficiency of 75 percent when the transformer or power supply rated output current is less than 50 mA. The ratio of the output wattage to the input wattage is at 100 percent tubing load.
	5	Neon or cold cathode lamps with transformer or power supply efficiency greater than or equal to a minimum efficiency of 68 percent when the transformer or power supply rated output current is 50 mA or greater. The ratio of the output wattage to the input wattage is at 100 percent tubing load.
	6	Fluorescent lighting systems meeting one of the following requirements: A. Use only lamps with a minimum color rendering index (CRI) of 80; or B. Use only electronic ballasts with a fundamental output frequency not less than 20 kHz.
	7	Light emitting diodes (LEDs) with a power supply having an efficiency of 80 percent or greater;
	8	Single voltage external power supplies that are designed to convert 120 volt AC input into lower voltage DC or AC output, and have a nameplate output power less than or equal to 250 watts, shall comply with the applicable requirements of the Appliance Efficiency Regulations (Title 20).
	9	Compact fluorescent lamps that do not contain a medium screw base sockets (E24/E26)
E		This page doubles as a field inspection checklist.

Field Inspector Notes:

STATE OF CALIFORNIA
SIGN LIGHTING CEC-NRCC-LTS-01-E (Revised 08/15)
CALIFORNIA ENERGY COMMISSION

CERTIFICATE OF COMPLIANCE	NRCC-LTS-01-E
Sign Lighting	(Page 5 of 5)
Project Name: 2700 INTERNATIONAL	Date Prepared: 12/01/22

DOCUMENTATION AUTHOR'S DECLARATION STATEMENT

1. I certify that this Certificate of Compliance documentation is accurate and complete.

Documentation Author Name:	Documentation Author Signature:
Company:	Signature Date:
Address:	CEA Certification Identification (if applicable):
City/State/Zip:	Phone:

RESPONSIBLE PERSON'S DECLARATION STATEMENT

I certify the following under penalty of perjury, under the laws of the State of California:

1. The information provided on this Certificate of Compliance is true and correct.
2. I am eligible under Division 3 of the Business and Professions Code to accept responsibility for the building design or system designed identified on this Certificate of Compliance (responsible designer).
3. The energy features and performance specifications, materials, components, and manufactured devices for the building design or system design identified on this Certificate of Compliance conform to the requirements of Title 24, Part 1 and Part 6 of the California Code of Regulations.
4. The building design features or system design features identified on this Certificate of Compliance are consistent with the information provided on other applicable compliance documents, worksheets, calculations, plans and specifications submitted to the enforcement agency for approval with this building permit application.
5. I will ensure that a completed signed copy of this Certificate of Compliance shall be made available with the building permit(s) issued for the building, and made available to the enforcement agency for all applicable inspections. I understand that a completed signed copy of this Certificate of Compliance is required to be included with the documentation the builder provides to the building owner at occupancy.

Responsible Designer Name:	Responsible Designer Signature:
Company:	Date Signed:
Address:	License:
City/State/Zip:	Phone:

PYATOK
1611 TELEGRAPH AVE.
SUITE 200
OAKLAND, CA 94612
T. 510.465.7010 | F. 510.465.8575
www.pyatok.com

THE UNITY COUNCIL
1900 FRUITVALE AVE
#2A
OAKLAND, CA 94601

EMERALD CITY ENGINEERS, INC
21705 Highway 99 Lynnwood, WA
98036 425-741-1200 tel / 1201 fax

2700 INTERNATIONAL
OAKLAND, CA 94601

STAMP:
REGISTERED PROFESSIONAL ENGINEER ROYAL C. FRENCH E19427 EXP. 3-31-23 ELECTRICAL STATE OF CALIFORNIA
12-09-22

ISSUE SCHEDULE

100 SD	5/11/22
50 DD	7/15/22
100 DD	9/16/22
PRICING SET	11/11/22
PERMIT SET	12/09/22

REVISION SCHEDULE

NO.	ISSUE	DATE

JOB NUMBER:	2049-008
DRAWN BY:	TH
CHECKED BY:	AF
ISSUE DATE:	12/09/2022
SCALE:	
TITLE:	**ENERGY CODE**

SHEET:
E7.06

PRELIMINARY - Not for Construction -

© 2019 PYATOK ARCHITECTURE & URBAN DESIGN

4/22/2022 6:28:22 PM
COPYRIGHT 2022, EMERALD CITY ENGINEERS, INC.
THUYNH J:\2049-008 2700 INTERNATIONAL, OAKLAND, CA\DWG\E706 ENERGY CODE.DWG 12-01-2022 09:45

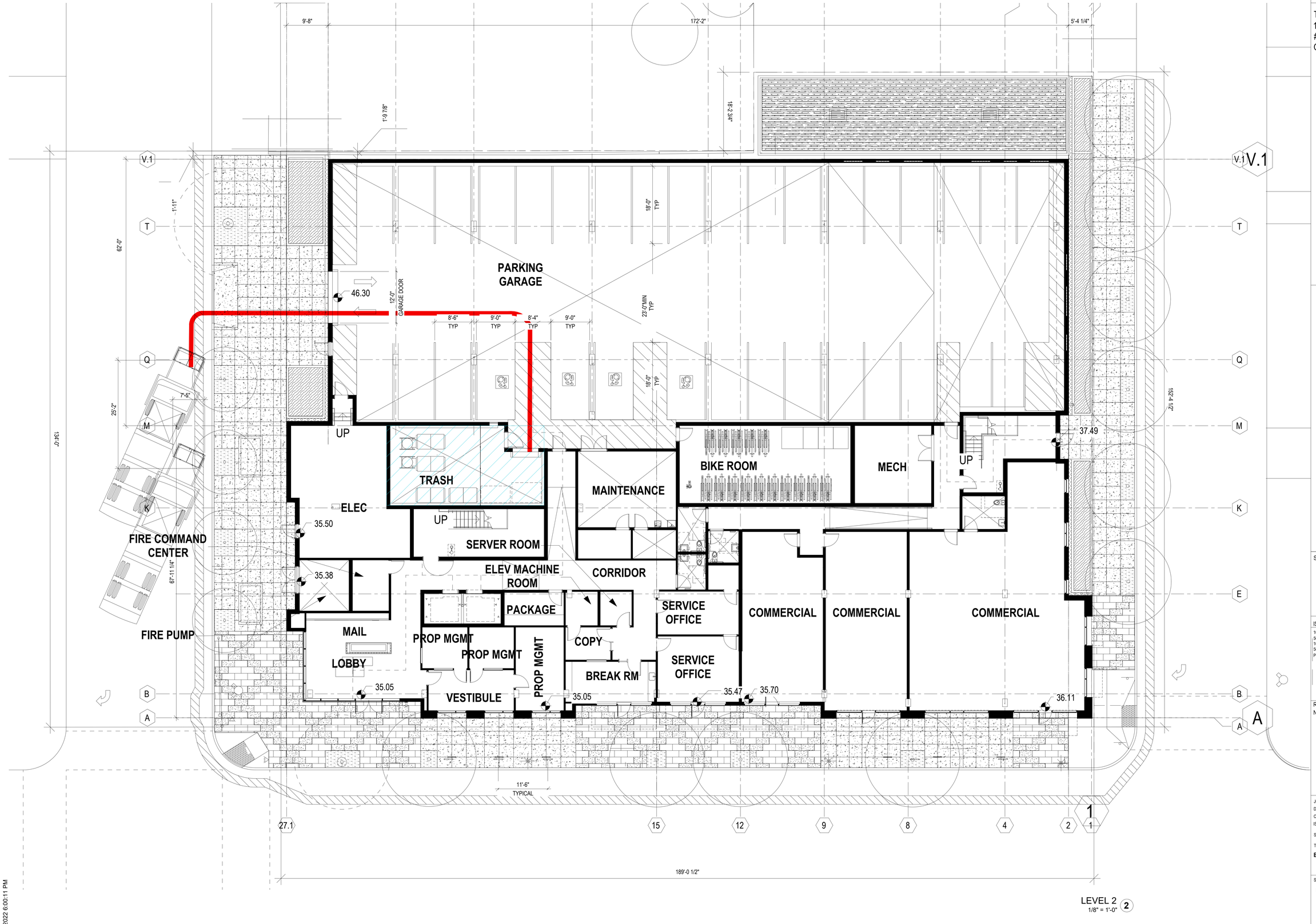

LEVEL 2 (2)
1/8" = 1'-0"

11/4/2022 6:00:11 PM

PYATOK
1611 TELEGRAPH AVE.
SUITE 200
OAKLAND, CA 94612
T. 510.465.7010 | F. 510.465.8575
www.pyatok.com

THE UNITY COUNCIL
1900 FRUITVALE AVE
#2A
OAKLAND, CA 94601

2700 INTERNATIONAL
OAKLAND, CA 94601

STAMP:

ISSUE SCHEDULE

100 SD	5/11/22
50 DD	7/15/22
100 DD	9/16/22
50 CD	11/18/22
PERMIT SET	12/09/22

REVISION SCHEDULE

NO.	ISSUE	DATE

JOB NUMBER:	1937
DRAWN BY:	PK
CHECKED BY:	DU
ISSUE DATE:	12/09/22
SCALE:	1/8" = 1'-0"

TITLE:
BUILDING PLANS - LEVEL 1

SHEET:
TR0.1

PRELIMINARY - Not for Construction -

© 2019 PYATOK ARCHITECTURE & URBAN DESIGN

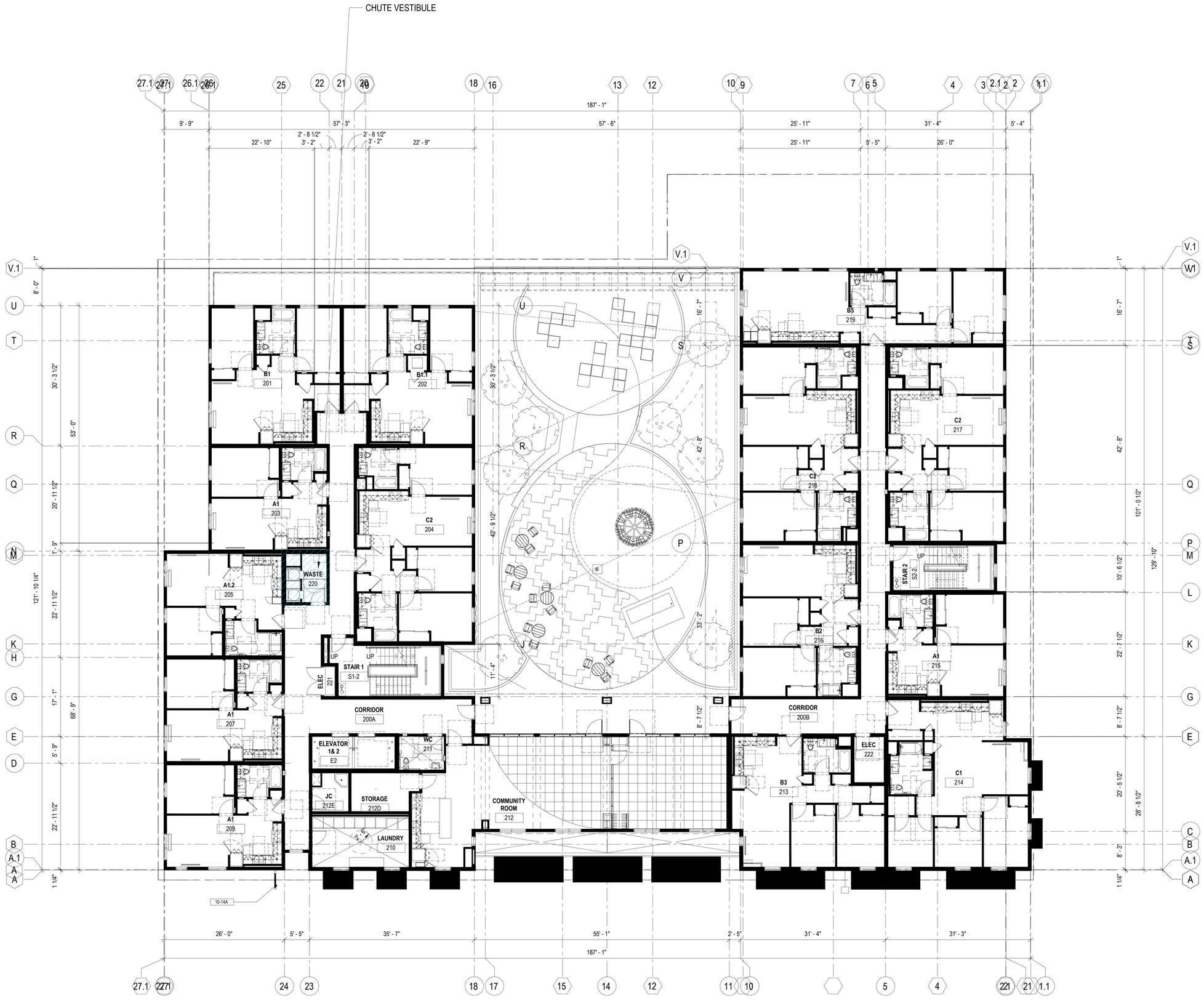

LEVEL 2
1/8" = 1'-0" (2)

11/4/2022 6:00:11 PM

PYATOK
1611 TELEGRAPH AVE.
SUITE 200
OAKLAND, CA 94612
T. 510.465.7010 | F. 510.465.8575
www.pyatok.com

THE UNITY COUNCIL
1900 FRUITVALE AVE
#2A
OAKLAND, CA 94601

2700 INTERNATIONAL
OAKLAND, CA 94601

STAMP:

ISSUE SCHEDULE

100 SD	5/11/22
50 DD	7/15/22
100 DD	9/16/22
50 CD	11/18/22
PERMIT SET	12/09/22

REVISION SCHEDULE

NO.	ISSUE	DATE

JOB NUMBER:	1937
DRAWN BY:	PK
CHECKED BY:	DU
ISSUE DATE:	12/09/22
SCALE:	1/8" = 1'-0"

TITLE:
BUILDING PLANS - LEVEL 2

SHEET:
TR0.2

PRELIMINARY - Not for Construction -

© 2019 PYATOK ARCHITECTURE & URBAN DESIGN

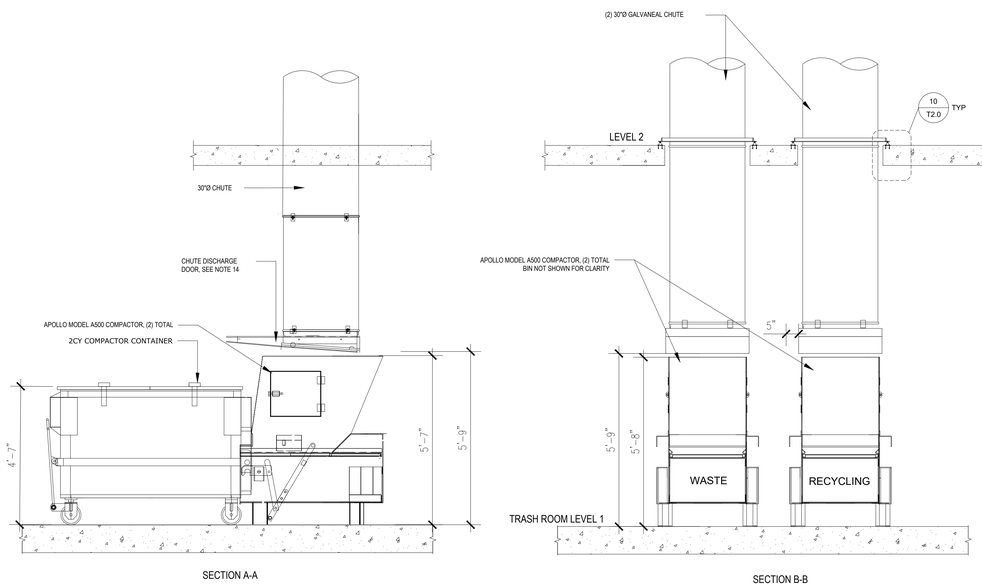

TRASH COLLECTION ROOM ELEVATION 3
1/2" = 1'-0"

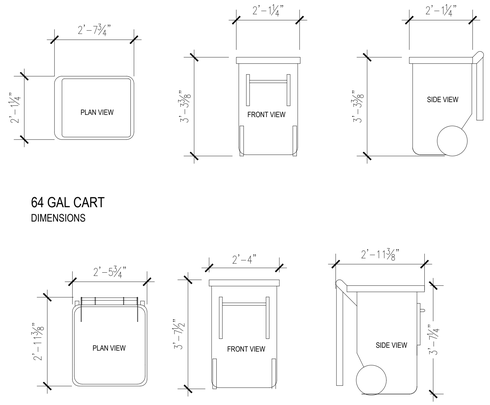

64 & 96 GAL CART DETAILS 4
1/2" = 1'-0"

SHEET NOTES:

RESIDENTIAL TRASH TERMINATION ROOM

1. TRASH COLLECTION ROOM IS PART OF 2HR FIRE-RATED TRASH CHUTE SHAFT - RESTRICTED ACCESS.
2. FLOOR SHALL BE FINISHED WITH WATERPROOF DECK COATING. FLOOR TO HAVE MINIMAL SLOPE (1" MAX) AND FLOOR DRAIN. FLOOR LEVEL UNDER COMPACTOR.
3. WALLS SHALL BE FINISHED WITH WASHABLE WATERPROOF SURFACE SUCH AS FRP OR HIGH-GLOSS ENAMEL PAINT, 8'-0" AFF.
4. INSTALL WALL PROTECTION: 11-½"HxNEW CONCRETE CURB AT BASE OF ALL NON-CONCRETE WALLS. DO NOT INSTALL THE CURB AROUND THE COMPACTORS/BISORTER OR POWER PACKS.
5. 6'-0" ROLL UP DOOR AND 3.0FT EXIT DOOR.
6. ROOM SHALL BE MECHANICALLY VENTILATED WITH (1) CFMITT PER 2019 CBC.
7. (2) 30"Ø GRAVITY CHUTE WITH COMPACTORS FOR WASTE & RECYCLING. PROVIDE 2CY FL COMPACTOR CONTAINERS FOR WASTE & RECYCLING. CHUTES SHALL TERMINATE AT 5'-9" AFF.
8. PP: COMPACTOR POWER PACKS SHALL BE FLOOR-MOUNTED. (2) 5HP 3-PHASE, 208/230/460V. 30A DISCONNECTS 63" AFF.
9. MCP: CHUTE MASTER CONTROL PANEL SHALL BE WALL-MOUNTED 60" AFF. MUST ALLOW LOCK DOWN OF CHUTE INTAKES FOR EXCHANGING CONTAINERS AND WASHING CHUTES. REQUIRES 120V 15A DEDICATED SERVICE.
10. AC: 2HP CHUTE AIR COMPRESSOR. SHALL BE FLOOR-MOUNTED. REQUIRES 120V 15A SERVICE OUTLETS.
11. OC: ODOR CONTROL UNIT SHALL BE WALL-MOUNTED 60" AFF. REQUIRES 120V 15A SERVICE OUTLETS.
12. HB: HOT AND COLD HOSE BIB SHALL BE WALL-MOUNTED 60" AFF.
13. PROVIDE ELECTRIC PALLET TRUCK FOR TRANSFERRING CONTAINERS. 4000lb CAPACITY; TURNING RADIUS: 45.5". REQUIRES 120V 15A SERVICE OUTLETS.
14. CHUTE DISCHARGE DOOR: TYPE-A, HORIZONTALLY INSULATED SLIDING-STEEL DOOR, HELD OPEN BY 165° F FUSIBLE LINK.
15. (1) UNDEDICATED 120V 15A SERVICE OUTLET REQUIRED FOR STAFF MAINTENANCE PURPOSE.

CHUTE INTAKE VESTIBULES:

16. CHUTE INTAKE VESTIBULES SHALL BE 1HR FIRE-RATED WITH 1HR FIRE-RATED DOOR; 5'-0" MIN REQUIRED PER ADA STANDARDS - RESIDENTIAL ACCESS. PROVIDE (2) SELF CLOSING, 15x18 BOTTOM HINGED, ELECTRICALLY INTERLOCKED, AUTOMATIC OPENING INTAKE DOORS TO DISPOSE TRASH AND RECYCLING INTO COMPACTORS PER CBC 713.13.1. POWER TO INTAKE DOORS SUPPLIED BY MCP. SEE DETAIL 17/2.0.
17. CHUTE SHAFT SHALL NOT BE ERECTED UNTIL CHUTE HAS BEEN INSTALLED. FOR SOUND PROOFING PURPOSES, DOUBLE STUD WALLS ARE REQUIRED ADJACENT TO OCCUPIED SPACES. INTERIOR OF SHAFT SHALL BE TAPED TO PREVENT ODOROUS AIR LEAKING INTO OCCUPIED SPACES (BY OTHERS).
18. PROVIDE 18X18 SIDE HINGED, AUTOMATIC OPENING, ELECTRICALLY INTERLOCKED THRU-WALL INTAKE DOORS THAT DISPOSE INTO CONTAINERS PER CBC 713.13.1. SEE DETAILS 2/T2.0.
19. PROVIDE ROUND FLOOR OPENINGS AT CONCRETE FLOORS AND SQUARED FLOOR OPENINGS AT WOOD-FRAME CONSTRUCTION. INSTALL FLOOR SUPPORT FRAME AT EACH FLOOR PENETRATION TO SECURE CHUTE. SEE DETAIL 9/T2.0 FOR ANCHORING AND MASON BRA-RED SOUND ISOLATION PAD ASSEMBLY. POUR RINGS WILL VARY BASED ON THICKNESS OF FLOOR SLAB AND SHALL BE PROVIDED BY MANUFACTURER.

GENERAL NOTES:

1. ANY DESIGNS OR DESIGN SOLUTIONS PRESENTED IN THIS DRAWING OR SPECIFICATION, WHICH ARE DIRECT OR IMPLIED, INCLUDING NARRATIVES, DRAWINGS, OR DIAGRAMS, ARE HEREBY CLARIFIED AS EXAMPLES AND SHALL NOT BE CONSIDERED COMPLETE DESIGNS OR DESIGNS SUITABLE FOR CONSTRUCTION.
2. OMISSIONS FROM DRAWINGS OR SPECIFICATIONS, OR THE INACCURATE DESCRIPTION OF DETAILS OF WORK, WHICH ARE MANIFESTLY NECESSARY TO CARRY OUT THE INTENT OF THE DRAWINGS AND SPECIFICATIONS, OR WHICH ARE CUSTOMARILY PERFORMED, SHALL NOT RELIEVE THE CONTRACTOR FROM PERFORMING SUCH OMITTED OR INACCURATELY DESCRIBED DETAILS OF THE WORK. WORK SHALL BE PERFORMED AS IF FULLY AND CORRECTLY SET FORTH AND DESCRIBED IN THE DRAWINGS AND SPECIFICATIONS.
3. CONTRACTOR SHALL FIELD VERIFY ALL DIMENSIONS AND CONDITIONS PRIOR TO START OF CONSTRUCTION. THE ARCHITECT SHALL BE NOTIFIED IMMEDIATELY OF ALL EXISTING FIELD CONDITIONS AND ANY DISCREPANCIES OR INCONSISTENCIES.

PROJECTED RESIDENTIAL COMPACT TRASH COLLECTION SCHEDULE / WK

SERVICE	M	T	W	T	F	S	SU
WASTE (2CY COMPACTED)	1				1		
RECYCLE (2CY COMPACTED)	1				1		
COMPOST (64 GAL LOOSE)	3						
TOTAL	5				2		

PROJECTED RETAIL OFFICE TRASH COLLECTION SCHEDULE / WK

SERVICE	M	T	W	T	F	S	SU
LOOSE WASTE (96G)	1						
LOOSE RECYCLE (96G)	2						
COMPOST (64G)	1						
TOTAL	4						

EQUIPMENT SUMMARY

QUANTITY	TYPE	MODEL	DESIGNATION	SHEET NOTE
2	COMPACTOR	APOLLO A500	-	7
2	POWER PACK	5HR APOLLO POWER PACK	-	9
2	2CY COMPACTOR CONTAINER	-	WASTE/RECYCLING	7
2	2CY COMPACTOR SPARE CONTAINER		WASTE/RECYCLING	7
1	ODOR CONTROL	SONOZAIRE ODOR NEUTRALIZER	-	12
1	CHUTE MASTER CONTROL PANEL	APOLLO AWF	CHUTE SYSTEM	10
3	96G CART	-	WASTE/RECYCLE	-
4	64G CART	-	COMPOST	-
1	HOSE BIB	-	HOT/COLD	13
1	AIR COMPRESSOR	-	CHUTE SYSTEM	11
1	ELECTRIC PALLET JACK	BIG JOE ELECTRIC PALLET JACK	-	14

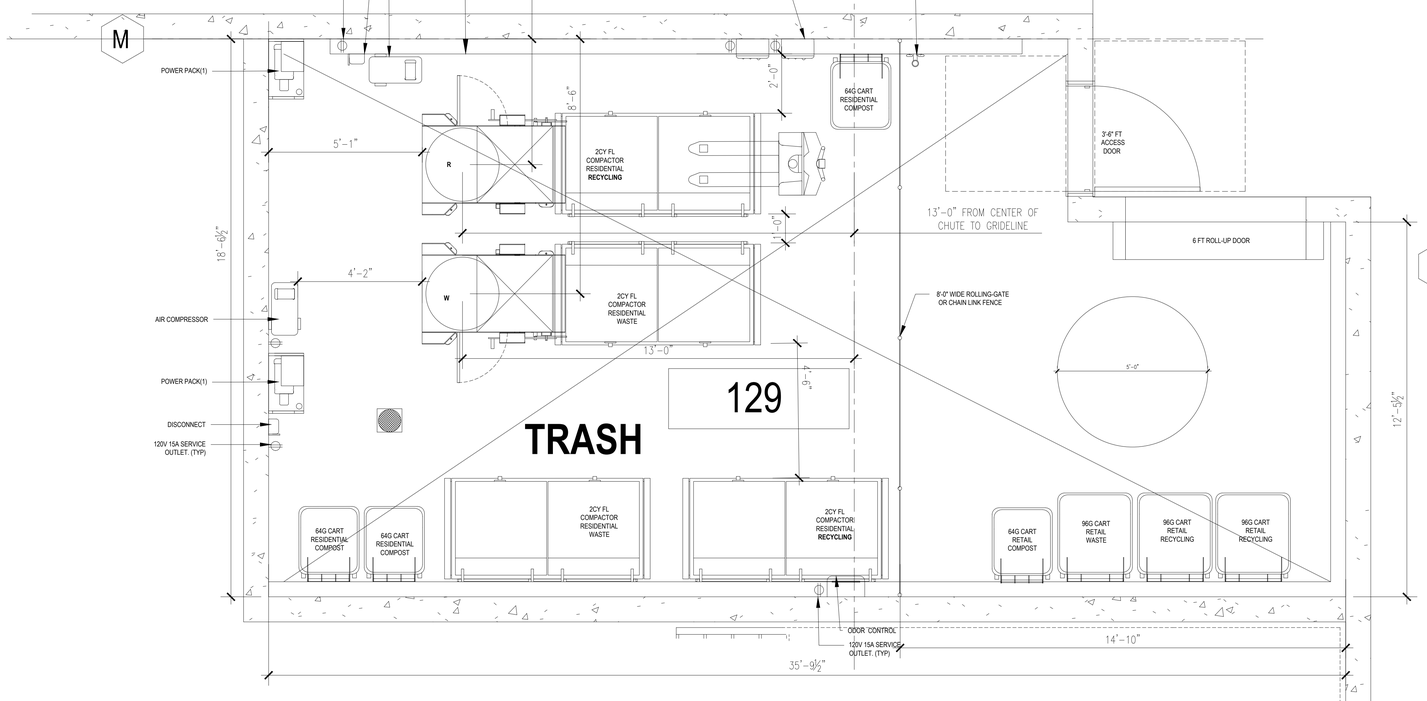

TRASH COLLECTION ROOM LEVEL 1 5
1/2" = 1'-0"

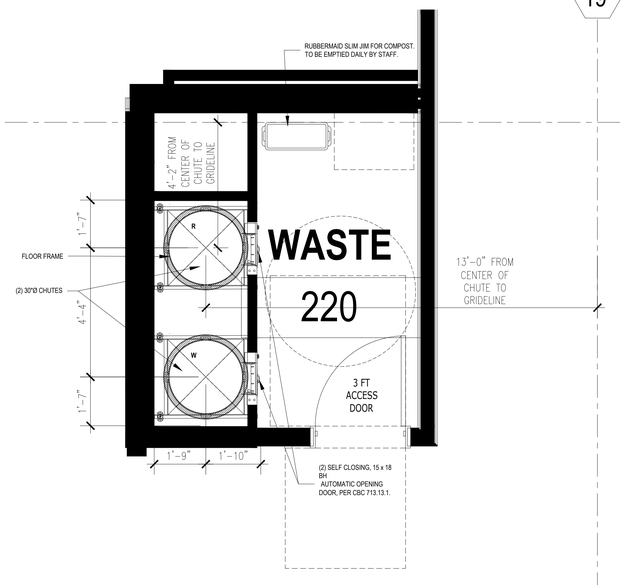

CHUTE VESTIBULE LEVEL 2-6 6
1/2" = 1'-0"

PYATOK
1611 TELEGRAPH AVE.
SUITE 200
OAKLAND, CA 94612
T. 510.465.7010 | F. 510.465.8575
www.pyatok.com

THE UNITY COUNCIL
1900 FRUITVALE AVE
#2A
OAKLAND, CA 94601

2700 INTERNATIONAL
OAKLAND, CA 94601

STAMP:

ISSUE SCHEDULE

100 SD	5/11/22
50 DD	7/15/22
100 DD	9/16/22
50 CD	11/18/22
PERMIT SET	12/09/22

REVISION SCHEDULE

NO.	ISSUE	DATE

JOB NUMBER:	1937
DRAWN BY:	PK
CHECKED BY:	DU
ISSUE DATE:	12/09/22
SCALE:	1/2" = 1'-0"

TITLE:
TRASH COLLECTION AREA

SHEET:
TR1.0

PRELIMINARY - Not for Construction -

© 2019 PYATOK ARCHITECTURE & URBAN DESIGN

11/4/2022 6:00:11 PM

NOTES:
1. INTAKE DOOR AND TRIM SHALL BE REMOVED FOR DOOR MAINTENANCE.
2. BOTTOM HINGED DOORS ARE SELF-CLOSING, NOISELESS, AND SELF-LATCHING. UL CLASSIFIED 90 MINUTE FIRE-RATED DOOR AND FRAME ASSEMBLY AND A TEMPERATURE RISE OF 250° F MAX IN 30 MINUTES.
3. MAX OPENING FOR INTAKE DOOR IS 14" FROM FACE OF FINISHED WALL.
4. 2019 CBC - 11B-308.2.1(FORWARD) & 11B-308.3.1(SIDE) HEIGHT: CONTROLS AND OPERATING MECHANISMS SHALL BE LOCATED NO HIGHER THAN 48 INCHES, AND NO LOWER THAN 15 INCHES ABOVE THE FINISHED FLOOR MEASURED TO THE CENTER OF THE PUSH BUTTON.
5. 2019 CBC - 11B-309.4 OPERATION: CONTROLS AND OPERATING MECHANISMS SHALL BE OPERABLE WITH ONE HAND AND SHALL NOT REQUIRE TIGHT GRASPING, PINCHING, OR TWISTING OF THE WRIST. THE FORCE REQUIRED TO ACTIVATE CONTROLS AND OPERATING MECHANISMS SHALL BE NO GREATER THAN 5 POUNDS.
6. UL LISTING FILE R3542 - VOLUME 1. -- APPLICATION FOR WILKINSON STYLE DOOR ONLY.

- **18x18 AIR ASSIST ACCESS DOOR IS LARGEST DOOR THAT ATM WILL DESIGN FOR CHUTE INTAKE.**
- **ATM WILL NEVER DESIGN A 24X24 INTAKE DOOR AS THESE DOOR SIZES HAVE LED TO FATALITIES.**

1 CHUTE INTAKE DOOR

SCALE: ½" = 1'-0"

3 WALL PROTECTION CONCRETE CURB

NTS

NOTES:
1. CHUTE SHAFT SHALL NOT BE ERECTED UNTIL CHUTE HAS BEEN INSTALLED. FOR SOUND PROOFING PURPOSES, DOUBLE STUD-WALLS ARE REQUIRED ADJACENT TO OCCUPIED SPACES. INTERIOR OF SHAFT SHALL BE TAPED TO PREVENT ODOROUS AIR LEAKING INTO OCCUPIED SPACES (BY OTHERS).
2. INTAKE DOOR NOT SHOWN FOR CLARITY.

5 CHUTE AIR AND SOUND ISOLATION

SCALE: ½" = 1'-0"

NOTES:
1. PROVIDE HIGH PRESSURE CHUTE WASHDOWN NOZZLE.
2. FILL SANITATION TANK WITH CONCENTRATED DISINFECTING SOLUTION. THE SYPHON HOSE SHOULD REACH THE BOTTOM OF THE SOLUTION CONTAINER. TO FLUSH WITH CLEAR WATER, TURN HANDLE TO THE ON POSITION. FACTORY SETTING OF THE PROPORTIONING VALVE IS FOR 50-GALLONS PER GALLON OF DISINFECTING SOLUTION.
3. NOTE THAT THE ACCESS DOOR AND D & S UNIT ARE SHOWN OUTSIDE OF CHUTE SHAFT FOR CLARITY. ALL WASHDOWN EQUIPMENT WILL BE INSTALLED WITHIN CHUTE SHAFT, ABOVE THE HIGHEST INTAKE. (1) D & S UNIT PER CHUTE.
4. 2019 CBC - 11B-308.2.1(FORWARD) & 308.3.1(SIDE) HEIGHT: CONTROLS AND OPERATING MECHANISMS SHALL BE LOCATED NO HIGHER THAN 48 INCHES AND NO LOWER THAN 34 INCHES ABOVE THE FINISHED FLOOR MEASURED TO THE MEASURED TO THE CENTER OF THE PUSH BUTTON.
5. 2019 CBC - 11B-309.4 OPERATION: CONTROLS AND OPERATING MECHANISMS SHALL BE OPERABLE WITH ONE HAND AND SHALL NOT REQUIRE TIGHT GRASPING, PINCHING, OR TWISTING OF THE WRIST. THE FORCE REQUIRED TO ACTIVATE CONTROLS AND OPERATING MECHANISMS SHALL BE NO GREATER THAN 5 POUNDS.
6. SUPPLIED BY CHUTE VENDOR - INSTALLED BY PLUMBER.

PLUMBING SCHEMATIC LEGEND:

1. ¾"Ø DOMESTIC HOT WATER INLET WITH VACUUM BREAKER. **(SUPPLIED/INSTALLED BY PLUMBING SUBCONTRACTOR)**
2. QUARTER-TURN GATE VALVE (SHUT-OFF AND BYPASS), (2) TOTAL. **(SUPPLIED/INSTALLED BY PLUMBING SUBCONTRACTOR)**
3. PLUMBING DESIGN, MATERIALS, AND INSTALLATION BY OTHERS. **(SUPPLIED/INSTALLED BY PLUMBING SUBCONTRACTOR)**
4. 24-VDC SOLENOID VALVE (OPTIONAL). NOT NEEDED FOR MANUAL OPERATION. **(NOT USED HERE)**
5. D & S UNIT: 1-GALLON CONTAINER, MOUNTING BRACKET, AND PROPORTIONAL VALVE AT REMOTE LOCATION. **(SUPPLIED/MOUNTED BY CHUTE SUBCONTRACTOR. PLUMBED BY PLUMBING SUBCONTRACTOR)**
6. FLUSHING SPRAY HEAD BELOW CHUTE VENT. 8GPM AT 60PSI MINIMUM. **(SUPPLIED/MOUNTED BY CHUTE SUBCONTRACTOR. PLUMBED BY PLUMBING SUBCONTRACTOR)**
7. FIRE SPRINKLER INTERMEDIATE ½" IPS - 155°F, PENDANT GLASS BULB SPRINKLER. 15GPM AT 7PSI MINIMUM. FIRE SPRINKLER AT HIGHEST INTAKE, LOWEST INTAKE, AND EVERY OTHER FLOOR BETWEEN, TO BE STARTED FROM HIGHEST INTAKE - CONNECTION BY OTHERS. **(SUPPLIED/MOUNTED BY CHUTE SUBCONTRACTOR. PLUMBED BY FIRE SPRINKLER SUBCONTRACTOR)**
8. SIDE-HINGED, UL RATED 90 MINUTE B-LABEL ACCESS DOOR. **(SUPPLIED BY CHUTE SUBCONTRACTOR. INSTALLED BY FRAMING SUBCONTRACTOR OR GC)**
9. SATIN CHROME PULL-HANDLE. **(SUPPLIED/INSTALLED BY CHUTE MANUFACTURE)**

7 FIRE SPRINKLER DETAILS AND CHUTE SANITATION UNIT
AT HIGHEST INTAKE

SCALE: ½" = 1'-0"

NOTES:
1. REFER TO MANUFACTURER SPECIFICATIONS FOR ALL OTHER INFORMATION NOT LISTED.

TYPE I FLOOR
CONNECTION

NOTES:
1.ALL HARDWARE PLATED
2.REFER TO MANUFACTURERS SPECIFICATIONS FOR ALL OTHER INFORMATION NOT INCLUDED

MASON BRA-RED MOUNT

9 FLOOR SUPPORT FRAME ANCHORING
SECTION VIEWS

SCALE: 6" = 1'-0"

10 CHUTE SHAFT AT INTAKE

SCALE: ½" = 1'-0"

NOTES:
1. ATTACHMENT OF ALL BLOCKING, CURBS, AND OTHER ROOF COMPONENTS SHALL BE DESIGNED AND INSTALLED TO MEET THE MINIMUM REQUIREMENTS OF MANUFACTURER.
2. SEE ARCHITECTURAL AND/OR STRUCTURAL DRAWINGS FOR ALL WORK BY OTHERS.

11 CHUTE VENT
AT ROOF LEVEL

SCALE: ½" = 1'-0"

NOTES:
1. SEE DETAIL 1/- FOR CHUTE INTAKE DOOR INFORMATION.
2. SEE DETAIL 9/- FOR ADDITIONAL FLOOR SUPPORT FRAME ANCHORING INFORMATION.
3. ANCHOR FLOOR SUPPORT FRAME AT ONE END AS SHOWN. OTHER SIDE OF FRAME TO REST ON TOP OF FLOOR AT INTAKE WALL. SEE PLAN FOR LAYOUT OF CHUTE SHAFT.

SOUND CONSULTANT TO VERIFY DETAILS AND UPDATE AS NECESSARY

THIS IS AN EXAMPLE SHAFT. CURRENT SHAFT CONDITIONS MAY VARY.

EXAMPLE MINIMUM SHAFT DETAILS

SHEET NOTES: 30"Ø CHUTE DETAILS
1. CHUTE MATERIAL: GALVANIZED OR GALVANEAL 16G STEEL
2. ALL WALL ASSEMBLIES ENCASING THE CHUTE SHAFT SHALL BE 2HR FIRE-RATED.
3. SEE ARCHITECTURAL AND/OR STRUCTURAL DRAWINGS TO VERIFY ALL INFORMATION NOT RELATED TO ATM'S SCOPE OF WORK PER AGREEMENT.
4. POUR RINGS WILL VARY BASED ON THICKNESS OF FLOOR SLAB AND SHALL BE PROVIDED BY MANUFACTURER.

GENERAL NOTES:
1. ANY DESIGNS OR SOLUTIONS SHOWN IN DRAWING, EITHER DIRECT OR IMPLIED, ARE HEREBY CLARIFIED AS EXAMPLES AND SHALL NOT BE CONSIDERED COMPLETE DESIGNS FOR CONSTRUCTION. THESE DRAWINGS ARE INTENDED TO SUPPLEMENT THE SUBMITTAL PACKAGE FROM ARCHITECT.
2. ANY PARTIAL INFORMATION, OMISSIONS, OR INACCURATE DESCRIPTIONS OF WORK SHOWN IN DRAWINGS, WHICH ARE NECESSARY TO PERFORM THE SCOPE OF WORK, SHALL NOT RELIEVE THE CONTRACTOR FROM COMPLETION OF WORK. ALL WORK SHALL BE PERFORMED TO SATISFY THE MINIMUM REQUIREMENTS OF THE CURRENT APPLICABLE BUILDING CODES.
3. CONTRACTOR SHALL FIELD VERIFY ALL DIMENSIONS AND CONDITIONS PRIOR TO START OF CONSTRUCTION. THE ARCHITECT SHALL BE PROMPTLY NOTIFIED OF ANY INCONSISTENCIES AND/OR DISCREPANCIES.

12 FLOOR SUPPORT FRAME ANCHORING
PLAN VIEWS

SCALE: 1½" = 1'-0"

11/4/2022 6:00:11 PM

PYATOK
1611 TELEGRAPH AVE.
SUITE 200
OAKLAND, CA 94612
T. 510.465.7010 | F. 510.465.8575
www.pyatok.com

THE UNITY COUNCIL
1900 FRUITVALE AVE
#2A
OAKLAND, CA 94601

2700 INTERNATIONAL
OAKLAND, CA 94601

STAMP:

ISSUE SCHEDULE

100 SD	5/11/22
50 DD	7/15/22
100 DD	9/16/22
50 CD	11/18/22
PERMIT SET	12/09/22

REVISION SCHEDULE

NO.	ISSUE	DATE

JOB NUMBER:	1937
DRAWN BY:	PK
CHECKED BY:	DU
ISSUE DATE:	12/09/22
SCALE:	NTS

TITLE:
CHUTE DETAILS

SHEET:
TR2.0

PRELIMINARY - Not for Construction -

© 2019 PYATOK ARCHITECTURE & URBAN DESIGN

PRELIMINARY DRAWING
FOR REVIEW ONLY

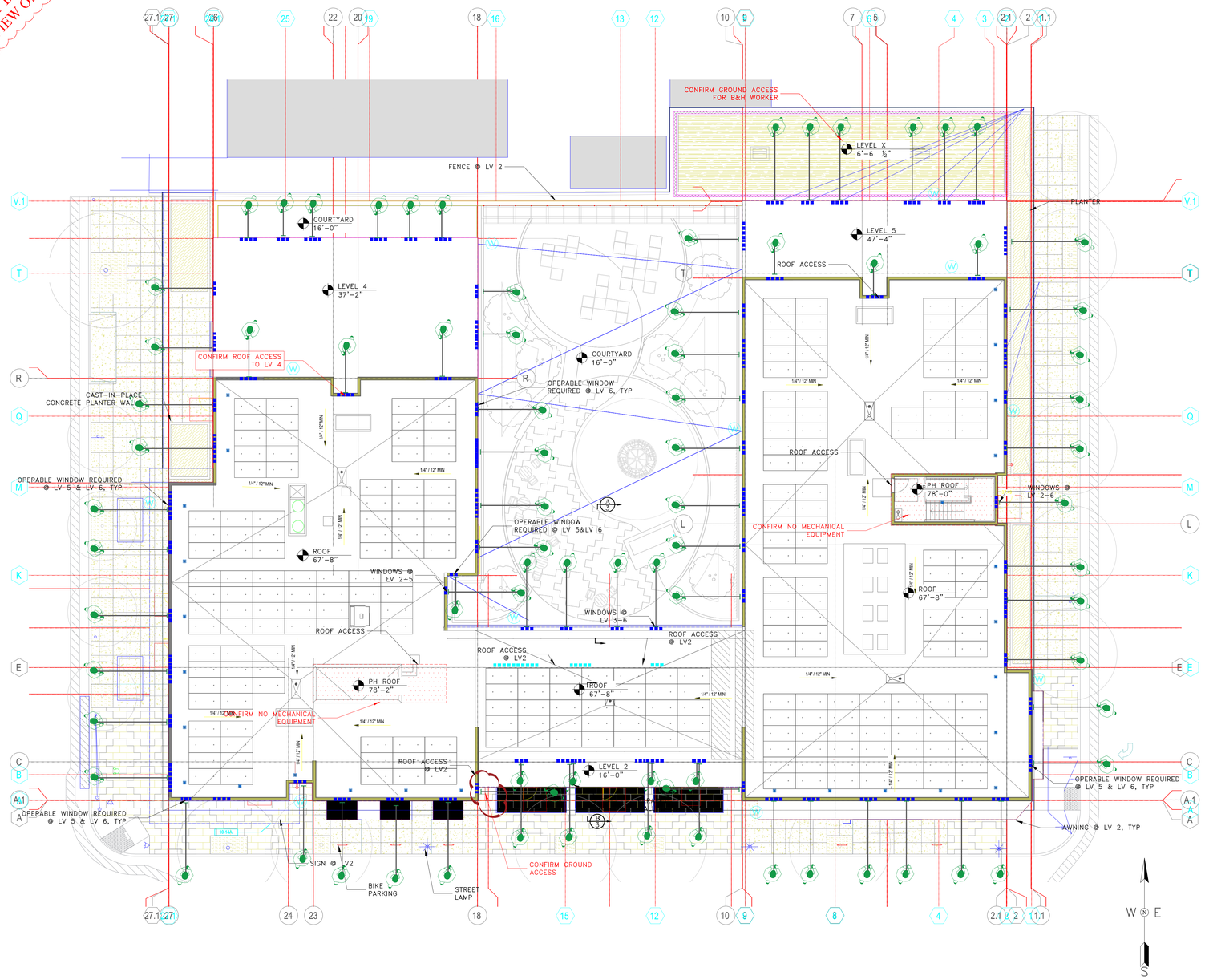

PLAN VIEW
SCALE: 1/8"=1'-0"

EBM LEGEND

- HOSE BIB
- UNSCHEDULED ANCHOR
- GROUND SUPPORTED EQUIPMENT SUCH AS LADDERS, EXTENSION TOOLS, AND/OR BRUSH AND HOSE EQUIPMENT
- 6'-0" ROOFTOP PERIMETER DANGER ZONE-PERSONAL FALL PROTECTION EQUIPMENT REQUIRED (SEE PLAN)
- WINDOWS
- WINDOWS AT LEVEL 2

GENERAL NOTES

- ANY AREA REQUIRING ACCESS FOR BUILDING MAINTENANCE SHALL PROVIDE A GUARDRAIL OR PARAPET 42" IN HEIGHT WHERE PERSONNEL ARE REQUIRED TO ENTER WITHIN 6'-0" OF ANY ROOF EDGE OR OPENING THAT CREATES A FALL HAZARD.
- ANY PARAPET OVER 6'-0" IN HEIGHT REQUIRES A CATWALK TO BE PROVIDED 42" BELOW THE TOP OF THE PARAPET.
- WINDOW WASHING EQUIPMENT SHALL NOT BE USED WITHIN 10' OF ELECTRICAL POWER LINES OR EQUIPMENT.
- 30'-0" WORKING MAX WORKING HEIGHT FOR LADDERS. CLEARANCE RATIO REQUIRED AT GROUND LEVEL IS 4:1. BRUSH AND HOSE CAN BE USED UP TO 48'-0", CLEARANCE RATIO REQUIRED AT GROUND LEVEL IS 3:1. BRUSH AND HOSE CANNOT ACCESS GLASS BEHIND JULIET BALCONIES.
- ANY ELEVATION OVER 48'-0" IN HEIGHT REQUIRES TIEBACK ANCHORS FOR UNSCHEDULED BUILDING MAINTENANCE.
- CONTRACTOR IS REQUIRED TO OBTAIN "NO PARKING" PERMITS FROM THE CITY TO PERFORM WINDOW WASHING OR UNSCHEDULED BUILDING MAINTENANCE.
- THE MAXIMUM OPENING FOR OPERABLE WINDOWS IS 18". THE MINIMUM WINDOW SILL HEIGHT IS 42". WINDOW HINGES MUST BE OFFSET FOR A WINDOW WASHER'S HAND/ARM AND EQUIPMENT TO FIT THROUGH HINGE GAP.
- ALL PERMANENT ACCESS LADDERS REQUIRE A 42" MIN. PARAPET WALL OR A SELF-CLOSING GATE AT THE TOP OF THE LADDER.

DRAWING HISTORY		
NO.	DESCRIPTION	DATE
1	EBM LAYOUT	08/18/22
2	UPDATE BACKGROUND	12/07/2022
3		
4		
5		
6		

THESE DRAWINGS OUTLINE A CONCEPTUAL SYSTEM DESIGNED FOR EXTERIOR BUILDING MAINTENANCE (EBM.) THE EBM MANUFACTURER OF THE EQUIPMENT IS RESPONSIBLE FOR THE FINAL DESIGN OF THE EQUIPMENT, SYSTEM COMPLIANCE AND INSTALLATION.

PYATOK
1611 TELEGRAPH AVE.
SUITE 200
OAKLAND, CA 94612
T. 510.465.7010 | F. 510.465.8575
www.pyatok.com

THE UNITY COUNCIL
1900 FRUITVALE AVE
#2A
OAKLAND, CA 94601

Access System & Solutions, Inc.
ScafFold Inspections & Testing Co.
CA S.I.T. License 655
183 A Beacon Street South San Francisco, CA 94080
(650) 588-4626 Fax (650) 588-4619
Email: justin@sasweb.com

CLIENT : PAYTOK
1611 TELEGRAPH AVE.
SUITE 200, OAKLAND, CA94612
PHONE : 510-465-7010
FAX :

SHEET TITLE:
Exterior Building Maintenance
EBM Acces Plan
FOR:
2700 INTERNATIONAL BLVD
OAKLAND,CA 94601

DATE	12/07/2022
DRAWN BY	TW
CHECKED BY	JDJ/JP
PROJECT N°	
REVISIONS	
SHEET N°	1 OF 3

2700 INTERNATIONAL

OAKLAND, CA 94601

STAMP:

ISSUE SCHEDULE

100 SD	5/11/22
50 DD	7/15/22
100 DD	9/16/22
50 CD	11/18/22
PERMIT SET	12/09/22

REVISION SCHEDULE

NO.	ISSUE	DATE

JOB NUMBER:
DRAWN BY:
CHECKED BY:
ISSUE DATE: 12/09/22
SCALE:
TITLE:
EXTERIOR BUILDING MAINTENANCE

SHEET:
EBM1.0

PRELIMINARY - Not for Construction -

© 2019 PYATOK ARCHITECTURE & URBAN DESIGN

PRELIMINARY DRAWING FOR REVIEW ONLY

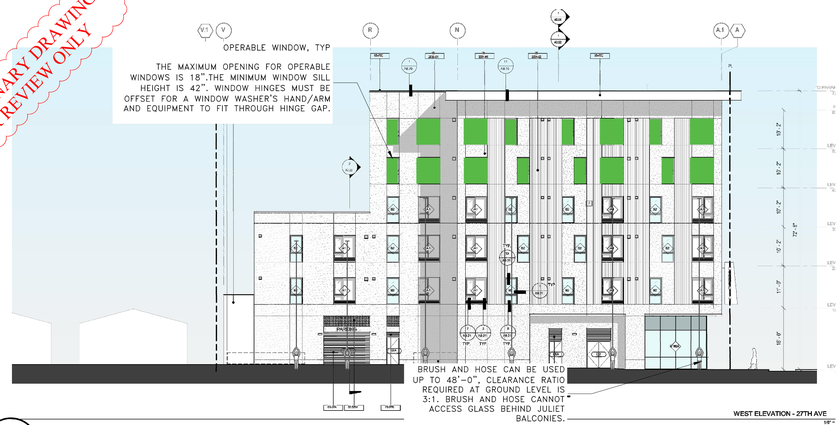

A 2 27TH AVE OPERABLE WINDOW ELVEVATION
SCALE: 1/16" =1'-0"

B 2 MITCHELL ST OPERABLE WINDOW ELVEVATION
SCALE: 1/16" =1'-0"

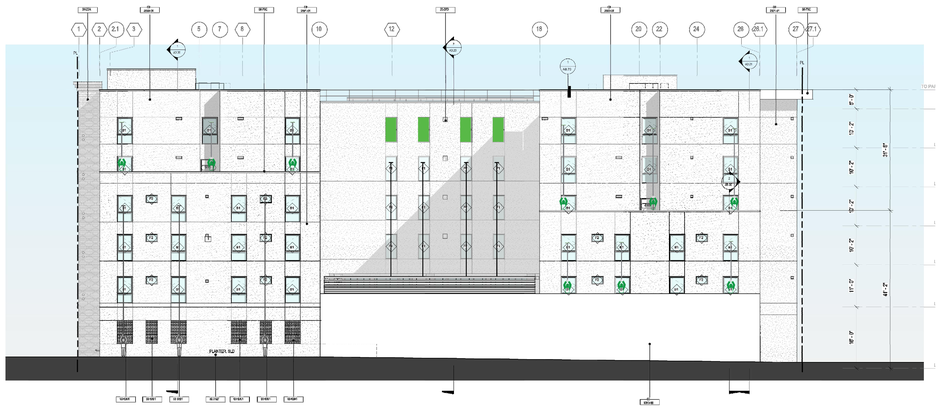

C 2 NORTH OPERABLE WINDOW ELVEVATION
SCALE: 1/16" =1'-0"

D 2 INTERNATIONL BLVD OPERABLE WINDOW ELVEVATION
SCALE: 1/16" =1'-0"

E 2 WEST COURTYARD OPERABLE WINDOW ELVEVATION
SCALE: 1/16" =1'-0"

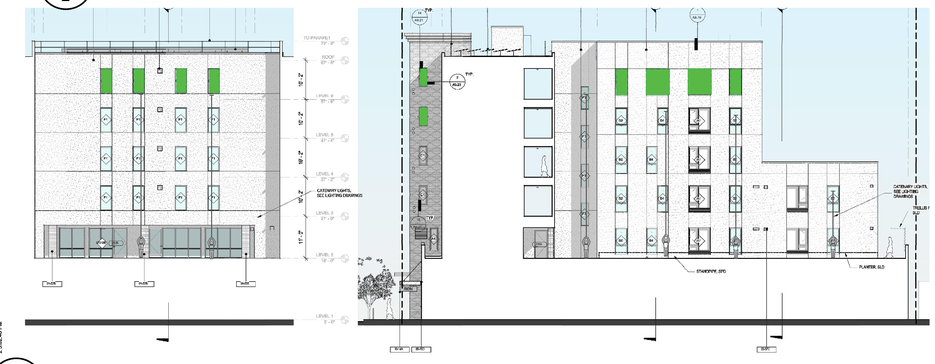

F 2 COURTYARD OPERABLE WINDOW ELVEVATION
SCALE: 1/16" =1'-0"

PYATOK
1611 TELEGRAPH AVE.
SUITE 200
OAKLAND, CA 94612
T. 510.465.7010 | F. 510.465.8575
www.pyatok.com

THE UNITY COUNCIL
1900 FRUITVALE AVE
#2A
OAKLAND, CA 94601

Access System & Solutions, Inc.
Scaffold Inspections & Testing Co.
183 A Beacon Street South San Francisco, CA 94080
(650) 588-4626 Fax (650) 588-4659
Email: jean@sit-co.com
CA S.I.T.
License #35

CLIENT : PAYTOK
1611 TELEGRAPH AVE.
SUITE 200, OAKLAND, CA94612
PHONE : 510-465-7010
FAX :

SHEET TITLE: Exterior Building Maintenance
EBM Acces Plan
FOR
2700 INTERNATIONAL BLVD
OAKLAND,CA 94601

DATE	12/07/2022
DRAWN BY :	TW
CHECKED BY :	JDJ/JP
PROJECT N° :	
REVISIONS :	
SHEET N° :	2 OF 3

2700 INTERNATIONAL
OAKLAND, CA 94601

STAMP:

ISSUE SCHEDULE

100 SD	5/11/22
50 DD	7/15/22
100 DD	9/16/22
50 CD	11/18/22
PERMIT SET	12/09/22

REVISION SCHEDULE

NO.	ISSUE	DATE

JOB NUMBER:
DRAWN BY:
CHECKED BY:
ISSUE DATE: 12/09/22
SCALE:
TITLE:
EXTERIOR BUILDING MAINTENANCE

SHEET:
EBM1.1

PRELIMINARY - Not for Construction -

© 2019 PYATOK ARCHITECTURE & URBAN DESIGN

PRELIMINARY DRAWING
FOR REVIEW ONLY

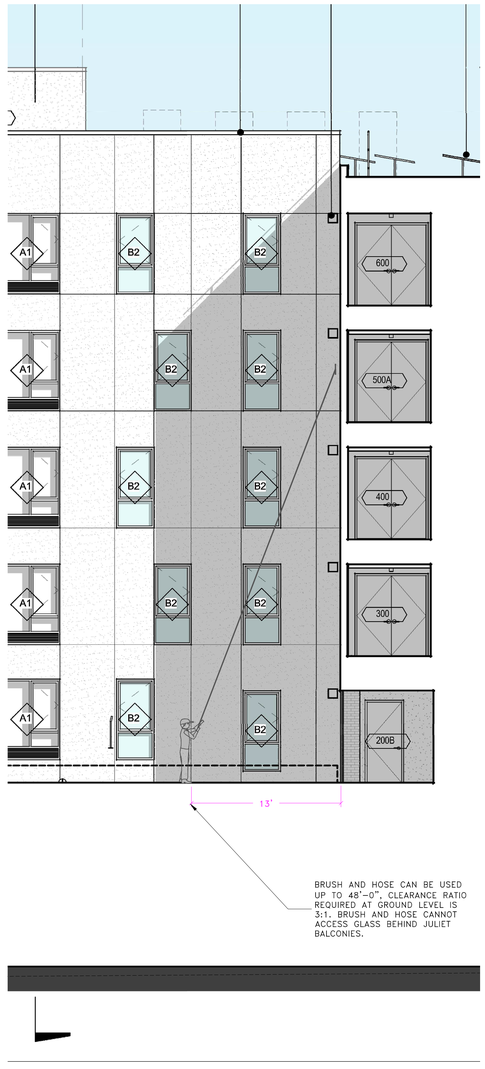

A/3 B&H SECTION
SCALE: 3/16" =1'-0"

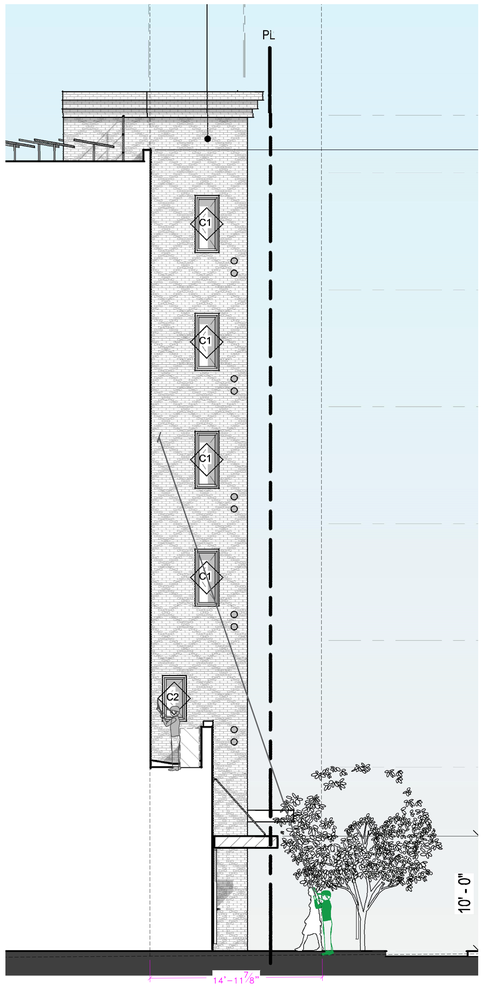

B/3 B&H SECTION
SCALE: 3/16" =1'-0"

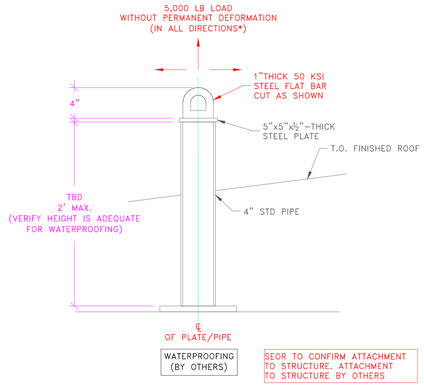

* IN ADDITION TO ANY OTHER APPLICABLE LIVE LOADS, LIFE LINE ANCHORAGES AND STRUCTURAL ELEMENTS THAT SUPPORT LIFE LINE ANCHORAGES SHALL BE DESIGNED FOR A LIVE LOAD OF AT LEAST 3,100 POUNDS (13.8 kN) FOR EACH ATTACHED LIFE LINE IN EVERY DIRECTIONS THAT A FALL ARREST LOAD MAY BE APPLIED.

1/3 TIE BACK ANCHOR DETAIL
SCALE: 1 1/2"=1'-0"

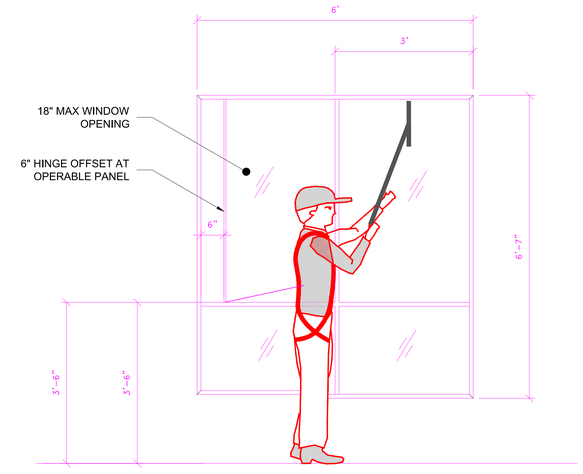

2/3 OPERABLE WINDOW (TYP)
SCALE: 3/4" =1'-0"

PYATOK
1611 TELEGRAPH AVE.
SUITE 200
OAKLAND, CA 94612
T. 510.465.7010 | F. 510.465.8575
www.pyatok.com

THE UNITY COUNCIL
1900 FRUITVALE AVE
#2A
OAKLAND, CA 94601

Access System & Solutions, Inc.
Scaffold Inspections & Testing Co.
183 A Beacon Street South San Francisco, CA 94080
(650) 588-4626 Fax (650) 588-4659
Email: jean@sis-co.com
CA S.I.T.
License #35

CLIENT : PAYTOK
1611 TELEGRAPH AVE.
SUITE 200, OAKLAND, CA94612
PHONE : 510-465-7010
FAX :

SHEET TITLE: Exterior Building Maintenance
EBM Acces Plan
FOR
2700 INTERNATIONAL BLVD
OAKLAND,CA 94601

DATE	12/07/2022
DRAWN BY :	TW
CHECKED BY :	JDJ/JP
PROJECT N° :	
REVISIONS :	
SHEET N° :	3 OF 3

2700 INTERNATIONAL
OAKLAND, CA 94601

STAMP:

ISSUE SCHEDULE

100 SD	5/11/22
50 DD	7/15/22
100 DD	9/16/22
50 CD	11/18/22
PERMIT SET	12/09/22

REVISION SCHEDULE

NO.	ISSUE	DATE

JOB NUMBER:
DRAWN BY:
CHECKED BY:
ISSUE DATE: 12/09/22
SCALE:
TITLE:
EXTERIOR BUILDING MAINTENANCE

SHEET:
EBM1.2

PRELIMINARY - Not for Construction -

© 2019 PYATOK ARCHITECTURE & URBAN DESIGN

Appendix B – Airport Clear Zones

2700 International

2700, 2712, 2720 International Boulevard, 1409 and 1415 Mitchell Street, Oakland, Alameda County, California 94601

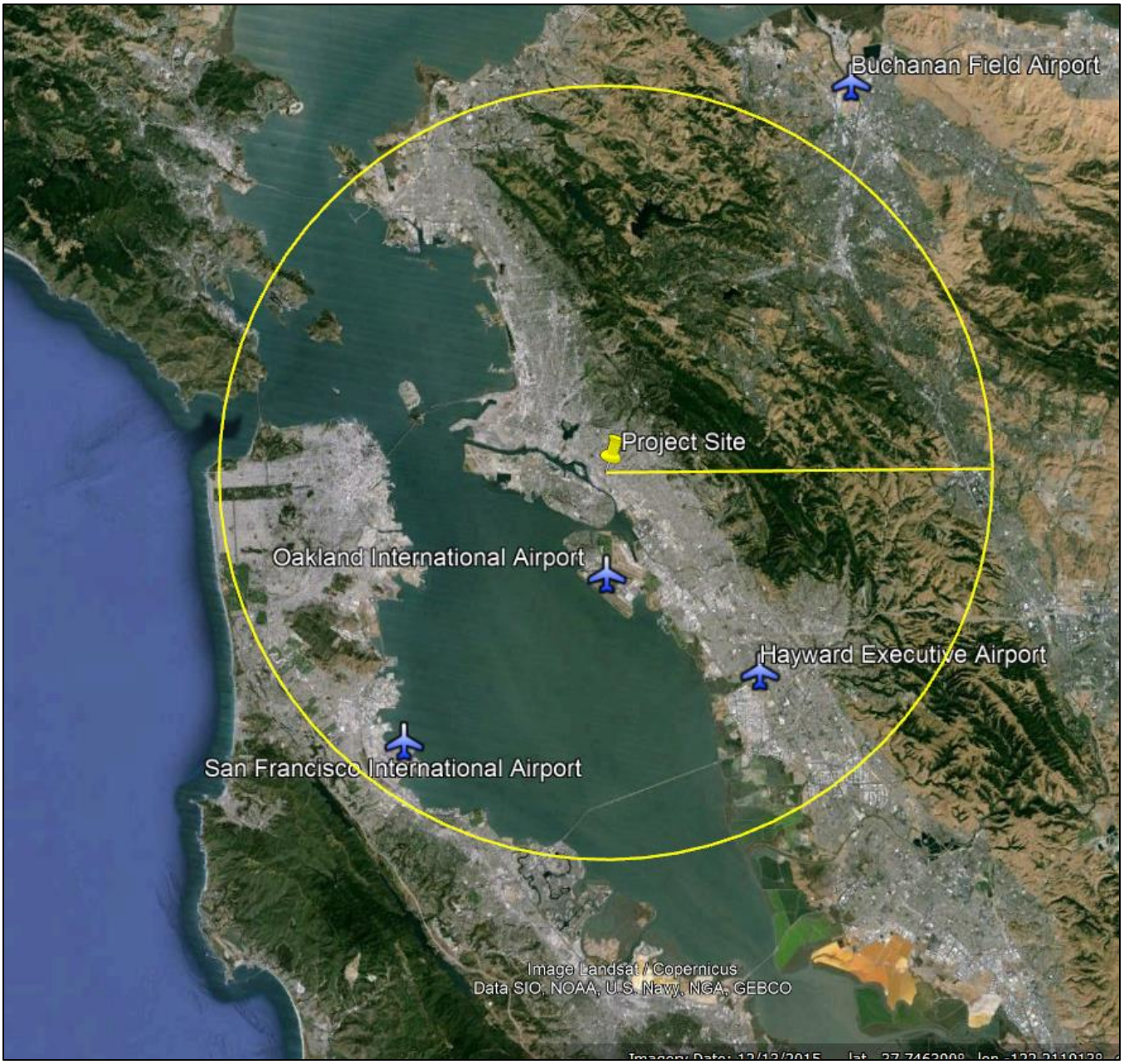

Map 4 Airports within 15 miles of the subject property

Table 10 Airport Distances

Airport type	Name	Distance from subject (Miles)	Airport Clear Zone
Major Airport	Oakland International Airport	4.62 miles south	No
Major Airport	San Francisco International Airport	13.82 miles south	No
Minor Airport	Hayward Executive Airport	10.28 miles south	No

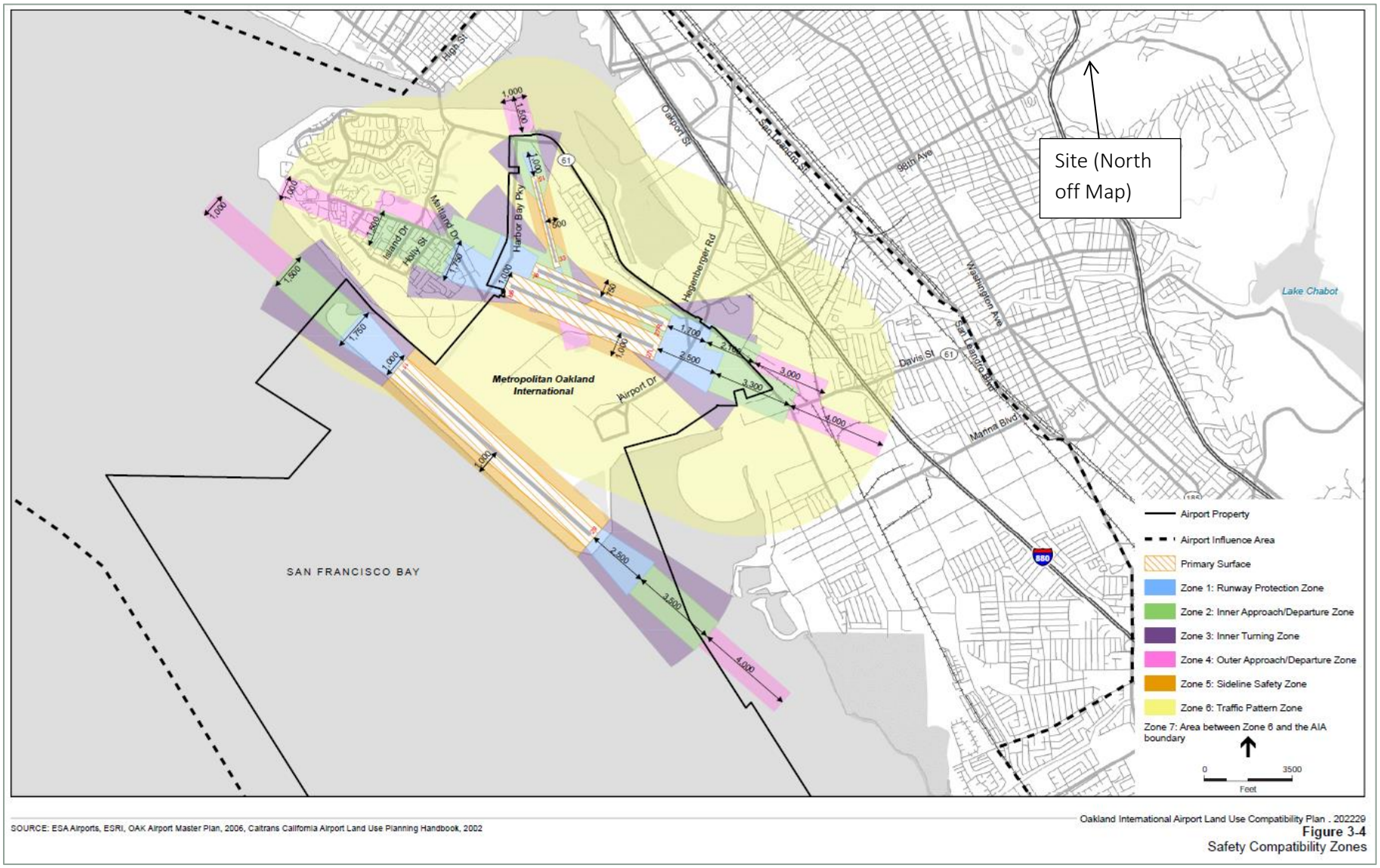

Figure 28 Oakland International Airport Safety Compatibility Zones

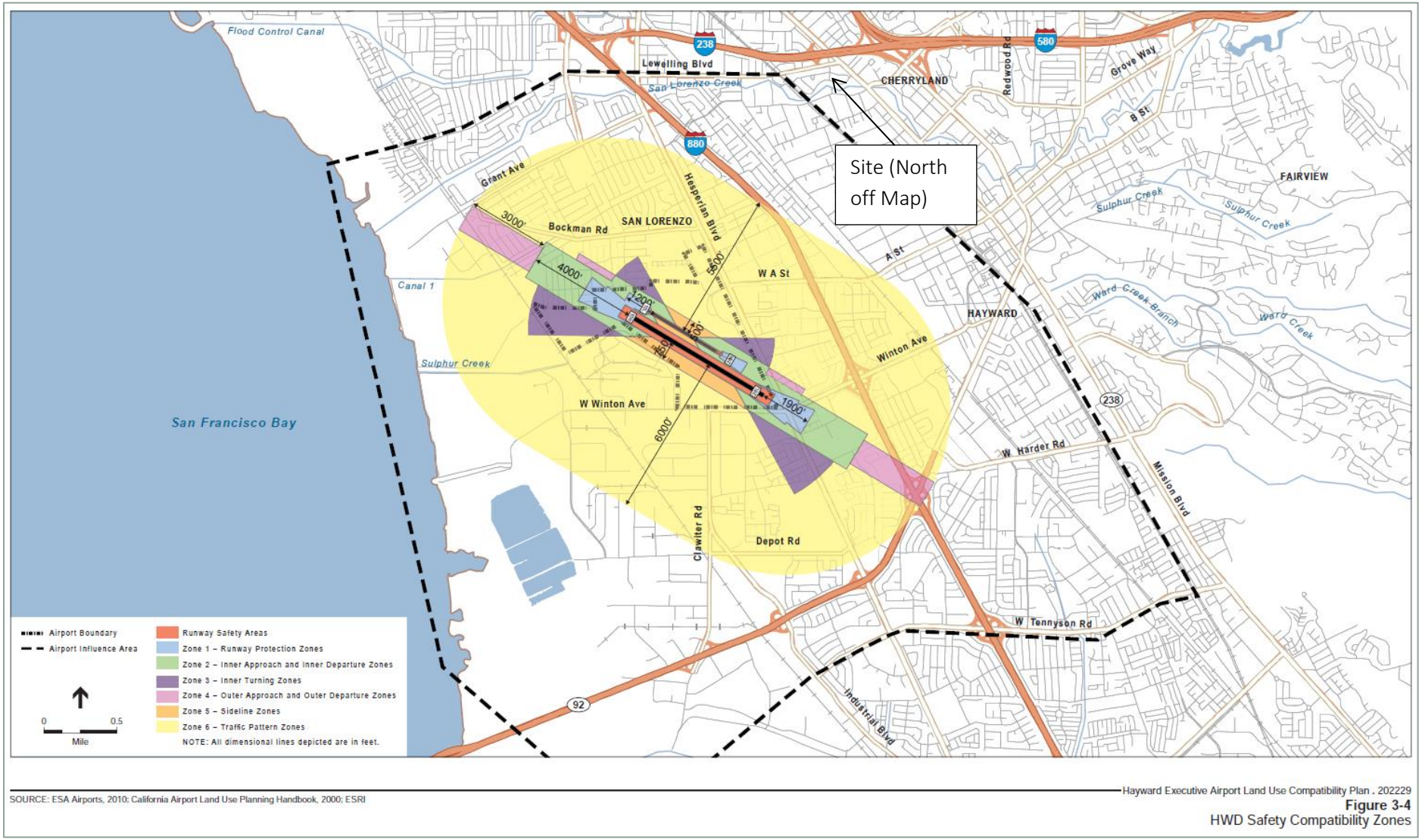

Figure 29 Hayward Executive Airport Safety Compatibility Zones

Appendix C – Floodplains, Wetlands and Endangered Species

- U.S. Department of Homeland Security. *Flood Insurance Rate Map (FIRM) for Alameda County, California and Incorporated Areas.* s.l. : Federal Emergency Management Agency, Effective Date December 21, 2018. FIRM Panel No. 06001C0086H.
- United States Department of the Interior, Fish and Wildlife Service. *List of threatened and endangered species that may occur in the project location or may be affected by project 2700 International Boulevard.* Sacramento, CA : Sacramento Fish and Wildlife Office, March 20, 2024. Project Code: 2024-0065761.
- United States Fish and Wildlife Service. Wetlands Mapper. *National Wetlands Inventory.* [Online] [Cited: March 20, 2024.] https://www.fws.gov/wetlands/Data/Mapper.html.

National Flood Hazard Layer FIRMette

FEMA

122°14'11"W 37°47'5"N

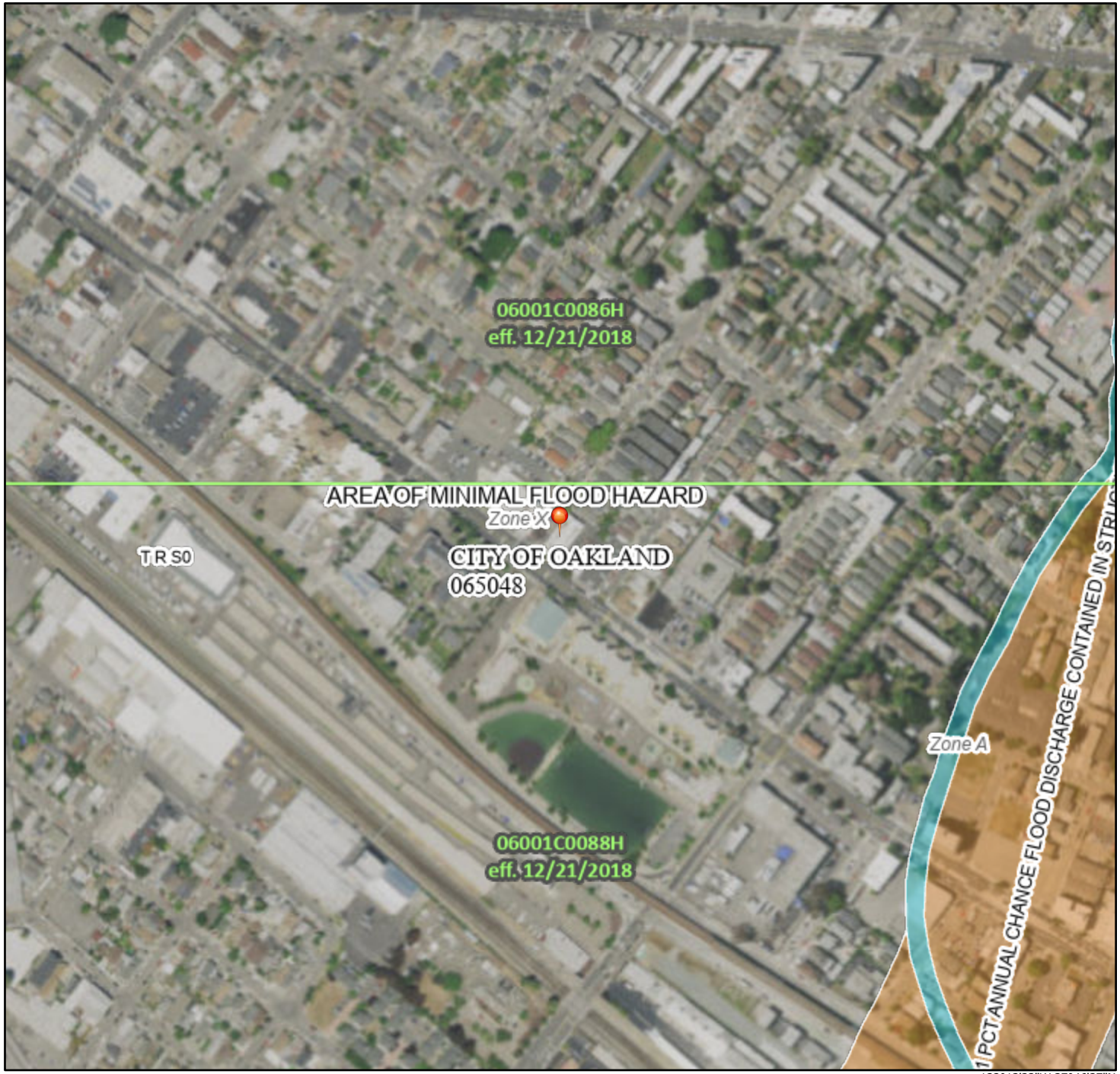

122°13'33"W 37°46'37"N

Feet

0 250 500 1,000 1,500 2,000

1:6,000

Basemap: USGS National Map: Orthoimagery: Data refreshed October, 2020

Legend

SEE FIS REPORT FOR DETAILED LEGEND AND INDEX MAP FOR FIRM PANEL LAYOUT

SPECIAL FLOOD HAZARD AREAS
- Without Base Flood Elevation (BFE) *Zone A, V, A99*
- With BFE or Depth *Zone AE, AO, AH, VE, AR*
- Regulatory Floodway

OTHER AREAS OF FLOOD HAZARD
- 0.2% Annual Chance Flood Hazard, Areas of 1% annual chance flood with average depth less than one foot or with drainage areas of less than one square mile *Zone X*
- Future Conditions 1% Annual Chance Flood Hazard *Zone X*
- Area with Reduced Flood Risk due to Levee. See Notes. *Zone X*
- Area with Flood Risk due to Levee *Zone D*

OTHER AREAS
- NO SCREEN Area of Minimal Flood Hazard *Zone X*
- Effective LOMRs
- Area of Undetermined Flood Hazard *Zone D*

GENERAL STRUCTURES
- Channel, Culvert, or Storm Sewer
- Levee, Dike, or Floodwall

OTHER FEATURES
- 20.2 Cross Sections with 1% Annual Chance
- 17.5 Water Surface Elevation
- Coastal Transect
- 513 Base Flood Elevation Line (BFE)
- Limit of Study
- Jurisdiction Boundary
- Coastal Transect Baseline
- Profile Baseline
- Hydrographic Feature

MAP PANELS
- Digital Data Available
- No Digital Data Available
- Unmapped

N

The pin displayed on the map is an approximate point selected by the user and does not represent an authoritative property location.

This map complies with FEMA's standards for the use of digital flood maps if it is not void as described below. The basemap shown complies with FEMA's basemap accuracy standards

The flood hazard information is derived directly from the authoritative NFHL web services provided by FEMA. This map was exported on 1/17/2023 at 4:21 PM and does not reflect changes or amendments subsequent to this date and time. The NFHL and effective information may change or become superseded by new data over time.

This map image is void if the one or more of the following map elements do not appear: basemap imagery, flood zone labels, legend, scale bar, map creation date, community identifiers, FIRM panel number, and FIRM effective date. Map images for unmapped and unmodernized areas cannot be used for regulatory purposes.

United States Department of the Interior

FISH AND WILDLIFE SERVICE
Sacramento Fish And Wildlife Office
Federal Building
2800 Cottage Way, Room W-2605
Sacramento, CA 95825-1846
Phone: (916) 414-6600 Fax: (916) 414-6713

In Reply Refer To: 03/20/2024 18:48:53 UTC
Project Code: 2024-0065761
Project Name: 2700 International Boulevard

Subject: List of threatened and endangered species that may occur in your proposed project location or may be affected by your proposed project

To Whom It May Concern:

The enclosed species list identifies threatened, endangered, proposed, and candidate species, as well as proposed and final designated critical habitat, that may occur within the boundary of your proposed project and/or may be affected by your proposed project. The species list fulfills the requirements of the U.S. Fish and Wildlife Service (Service) under section 7(c) of the Endangered Species Act (Act) of 1973, as amended (16 U.S.C. 1531 *et seq.*).

New information based on updated surveys, changes in the abundance and distribution of species, changed habitat conditions, or other factors could change this list. Please feel free to contact us if you need more current information or assistance regarding the potential impacts to federally proposed, listed, and candidate species and federally designated and proposed critical habitat. Please note that under 50 CFR 402.12(e) of the regulations implementing section 7 of the Act, the accuracy of this species list should be verified after 90 days. This verification can be completed formally or informally as desired. The Service recommends that verification be completed by visiting the IPaC website at regular intervals during project planning and implementation for updates to species lists and information. An updated list may be requested through IPaC by completing the same process used to receive the enclosed list.

The purpose of the Act is to provide a means whereby threatened and endangered species and the ecosystems upon which they depend may be conserved. Under sections 7(a)(1) and 7(a)(2) of the Act and its implementing regulations (50 CFR 402 *et seq.*), Federal agencies are required to utilize their authorities to carry out programs for the conservation of threatened and endangered species and to determine whether projects may affect threatened and endangered species and/or designated critical habitat.

A Biological Assessment is required for construction projects (or other undertakings having similar physical impacts) that are major Federal actions significantly affecting the quality of the human environment as defined in the National Environmental Policy Act (42 U.S.C. 4332(2)

(c)). For projects other than major construction activities, the Service suggests that a biological evaluation similar to a Biological Assessment be prepared to determine whether the project may affect listed or proposed species and/or designated or proposed critical habitat. Recommended contents of a Biological Assessment are described at 50 CFR 402.12.

If a Federal agency determines, based on the Biological Assessment or biological evaluation, that listed species and/or designated critical habitat may be affected by the proposed project, the agency is required to consult with the Service pursuant to 50 CFR 402. In addition, the Service recommends that candidate species, proposed species and proposed critical habitat be addressed within the consultation. More information on the regulations and procedures for section 7 consultation, including the role of permit or license applicants, can be found in the "Endangered Species Consultation Handbook" at: https://www.fws.gov/sites/default/files/documents/endangered-species-consultation-handbook.pdf

Migratory Birds: In addition to responsibilities to protect threatened and endangered species under the Endangered Species Act (ESA), there are additional responsibilities under the Migratory Bird Treaty Act (MBTA) and the Bald and Golden Eagle Protection Act (BGEPA) to protect native birds from project-related impacts. Any activity, intentional or unintentional, resulting in take of migratory birds, including eagles, is prohibited unless otherwise permitted by the U.S. Fish and Wildlife Service (50 C.F.R. Sec. 10.12 and 16 U.S.C. Sec. 668(a)). For more information regarding these Acts, see Migratory Bird Permit | What We Do | U.S. Fish & Wildlife Service (fws.gov).

The MBTA has no provision for allowing take of migratory birds that may be unintentionally killed or injured by otherwise lawful activities. It is the responsibility of the project proponent to comply with these Acts by identifying potential impacts to migratory birds and eagles within applicable NEPA documents (when there is a federal nexus) or a Bird/Eagle Conservation Plan (when there is no federal nexus). Proponents should implement conservation measures to avoid or minimize the production of project-related stressors or minimize the exposure of birds and their resources to the project-related stressors. For more information on avian stressors and recommended conservation measures, see https://www.fws.gov/library/collections/threats-birds.

In addition to MBTA and BGEPA, Executive Order 13186: *Responsibilities of Federal Agencies to Protect Migratory Birds*, obligates all Federal agencies that engage in or authorize activities that might affect migratory birds, to minimize those effects and encourage conservation measures that will improve bird populations. Executive Order 13186 provides for the protection of both migratory birds and migratory bird habitat. For information regarding the implementation of Executive Order 13186, please visit https://www.fws.gov/partner/council-conservation-migratory-birds.

We appreciate your concern for threatened and endangered species. The Service encourages Federal agencies to include conservation of threatened and endangered species into their project planning to further the purposes of the Act. Please include the Consultation Code in the header of this letter with any request for consultation or correspondence about your project that you submit to our office.

Attachment(s):

- Official Species List

OFFICIAL SPECIES LIST

This list is provided pursuant to Section 7 of the Endangered Species Act, and fulfills the requirement for Federal agencies to "request of the Secretary of the Interior information whether any species which is listed or proposed to be listed may be present in the area of a proposed action".

This species list is provided by:

Sacramento Fish And Wildlife Office
Federal Building
2800 Cottage Way, Room W-2605
Sacramento, CA 95825-1846
(916) 414-6600

PROJECT SUMMARY

Project Code: 2024-0065761
Project Name: 2700 International Boulevard
Project Type: Federal Grant / Loan Related
Project Description: The 2700 International project proposes to demolish existing improvements and construct a new, six story building on a 0.61-acre site comprised of five contiguous parcels (APNs 025-0712-019-02, -017, -016, -015, and -014) with addresses 2700, 2712, 2720 International Boulevard, 1409 and 1415 Mitchell Street in Oakland, Alameda County, California 94601. The project proposes to construct 75 affordable apartments and approximately 3,800 square feet of ground floor commercial space. The unit mix will be 35 one-bedroom units, 21 two-bedroom units and 19 three-bedroom units for a total of 75 units. On-site resident amenities include a community room, shared laundry facilities, administrative offices and supportive services offices. A total of 33 parking spaces will be provided onsite in an enclosed garage on the ground floor located behind the commercial space. A total of 50 bicycle parking spaces will also be provided.

Demolition

Existing improvements to be demolished include a three-story commercial building constructed in 1969, a two-story mixed-use building constructed in 1960 and a surface parking lot.

Design

The new building will consist of five residential floors over first floor podium with commercial space, parking and services offices. Commercial spaces may have individual storefront entries with canopies, signage and lighting that allow each business to have an individual presence on International Boulevard. At the upper floors the residential buildings are organized around a shared courtyard space approximately 60 feet in width flanked by community rooms and common laundry space. The building steps down from six stories at International Boulevard to four and three stories and then finally to one story adjacent to neighborhood homes to create a strong transition from the commercial boulevard to the existing homes. The building form consists of strong vertical elements with rich patterning of brick and stucco that reflect the neighborhood context. Opportunities for local art are incorporated into the bulkheads at storefronts and into the raised planters on 27th Avenue and on Mitchell Street.

Circulation

Access to parking is provided from 27th Avenue consistent with the existing vehicle circulation pattern. A loading zone is provided on 27th to accommodate deliveries, passenger loading and residents' moving trucks. Waste will be collected within the garage and will be staged in the loading zone on 27th Avenue for pick up. All utility services are located either

underground or enclosed within the building.

Funding

The project is publicly funded and will include Low-Income Housing Tax Credits (LIHTC) funding and California Tax Credit Allocation Committee (TCAC) minimum standards. The project is 100% affordable and will serve households below 60 percent of Area Median Income (AMI). A total of 22 units will be reserved for formerly homeless veterans. The total project cost is estimated to be around $80,000,000.

Project Location:

The approximate location of the project can be viewed in Google Maps: https://www.google.com/maps/@37.780742599999996,-122.23093753022454,14z

Counties: Alameda County, California

ENDANGERED SPECIES ACT SPECIES

There is a total of 15 threatened, endangered, or candidate species on this species list.

Species on this list should be considered in an effects analysis for your project and could include species that exist in another geographic area. For example, certain fish may appear on the species list because a project could affect downstream species.

IPaC does not display listed species or critical habitats under the sole jurisdiction of NOAA Fisheries[1], as USFWS does not have the authority to speak on behalf of NOAA and the Department of Commerce.

See the "Critical habitats" section below for those critical habitats that lie wholly or partially within your project area under this office's jurisdiction. Please contact the designated FWS office if you have questions.

---

1. NOAA Fisheries, also known as the National Marine Fisheries Service (NMFS), is an office of the National Oceanic and Atmospheric Administration within the Department of Commerce.

MAMMALS

NAME	STATUS
Salt Marsh Harvest Mouse *Reithrodontomys raviventris* No critical habitat has been designated for this species. Species profile: https://ecos.fws.gov/ecp/species/613	Endangered

BIRDS

NAME	STATUS
California Least Tern *Sternula antillarum browni* No critical habitat has been designated for this species. Species profile: https://ecos.fws.gov/ecp/species/8104	Endangered
California Ridgway"s Rail *Rallus obsoletus obsoletus* No critical habitat has been designated for this species. Species profile: https://ecos.fws.gov/ecp/species/4240	Endangered
Western Snowy Plover *Charadrius nivosus nivosus* Population: Pacific Coast population DPS-U.S.A. (CA, OR, WA), Mexico (within 50 miles of Pacific coast) There is **final** critical habitat for this species. Your location does not overlap the critical habitat. Species profile: https://ecos.fws.gov/ecp/species/8035	Threatened

REPTILES

NAME	STATUS
Alameda Whipsnake (=striped Racer) *Masticophis lateralis euryxanthus* There is **final** critical habitat for this species. Your location does not overlap the critical habitat. Species profile: https://ecos.fws.gov/ecp/species/5524	Threatened
Northwestern Pond Turtle *Actinemys marmorata* No critical habitat has been designated for this species. Species profile: https://ecos.fws.gov/ecp/species/1111	Proposed Threatened

AMPHIBIANS

NAME	STATUS
California Red-legged Frog *Rana draytonii* There is **final** critical habitat for this species. Your location does not overlap the critical habitat. Species profile: https://ecos.fws.gov/ecp/species/2891	Threatened
California Tiger Salamander *Ambystoma californiense* Population: U.S.A. (Central CA DPS) There is **final** critical habitat for this species. Your location does not overlap the critical habitat. Species profile: https://ecos.fws.gov/ecp/species/2076	Threatened
Foothill Yellow-legged Frog *Rana boylii* Population: Central Coast Distinct Population Segment (Central Coast DPS) No critical habitat has been designated for this species.	Threatened

NAME STATUS

Species profile: https://ecos.fws.gov/ecp/species/5133

FISHES

NAME STATUS

Tidewater Goby *Eucyclogobius newberryi* Endangered

There is **final** critical habitat for this species. Your location does not overlap the critical habitat.

Species profile: https://ecos.fws.gov/ecp/species/57

INSECTS

NAME STATUS

Monarch Butterfly *Danaus plexippus* Candidate

No critical habitat has been designated for this species.

Species profile: https://ecos.fws.gov/ecp/species/9743

CRUSTACEANS

NAME STATUS

Vernal Pool Fairy Shrimp *Branchinecta lynchi* Threatened

There is **final** critical habitat for this species. Your location does not overlap the critical habitat.

Species profile: https://ecos.fws.gov/ecp/species/498

FLOWERING PLANTS

NAME STATUS

Pallid Manzanita *Arctostaphylos pallida* Threatened

No critical habitat has been designated for this species.

Species profile: https://ecos.fws.gov/ecp/species/8292

Presidio Clarkia *Clarkia franciscana* Endangered

No critical habitat has been designated for this species.

Species profile: https://ecos.fws.gov/ecp/species/3890

Robust Spineflower *Chorizanthe robusta var. robusta* Endangered

There is **final** critical habitat for this species. Your location does not overlap the critical habitat.

Species profile: https://ecos.fws.gov/ecp/species/9287

CRITICAL HABITATS

THERE ARE NO CRITICAL HABITATS WITHIN YOUR PROJECT AREA UNDER THIS OFFICE'S JURISDICTION.

YOU ARE STILL REQUIRED TO DETERMINE IF YOUR PROJECT(S) MAY HAVE EFFECTS ON ALL ABOVE LISTED SPECIES.

IPAC USER CONTACT INFORMATION

Agency: Bay Desert, Inc.
Name: Cinnamon Crake
Address: 422 Larkfield Center #104
City: Santa Rosa
State: CA
Zip: 95403
Email ccrake@baydesert.com
Phone: 7075233710

U.S. Fish and Wildlife Service

National Wetlands Inventory

2700 International Boulevard

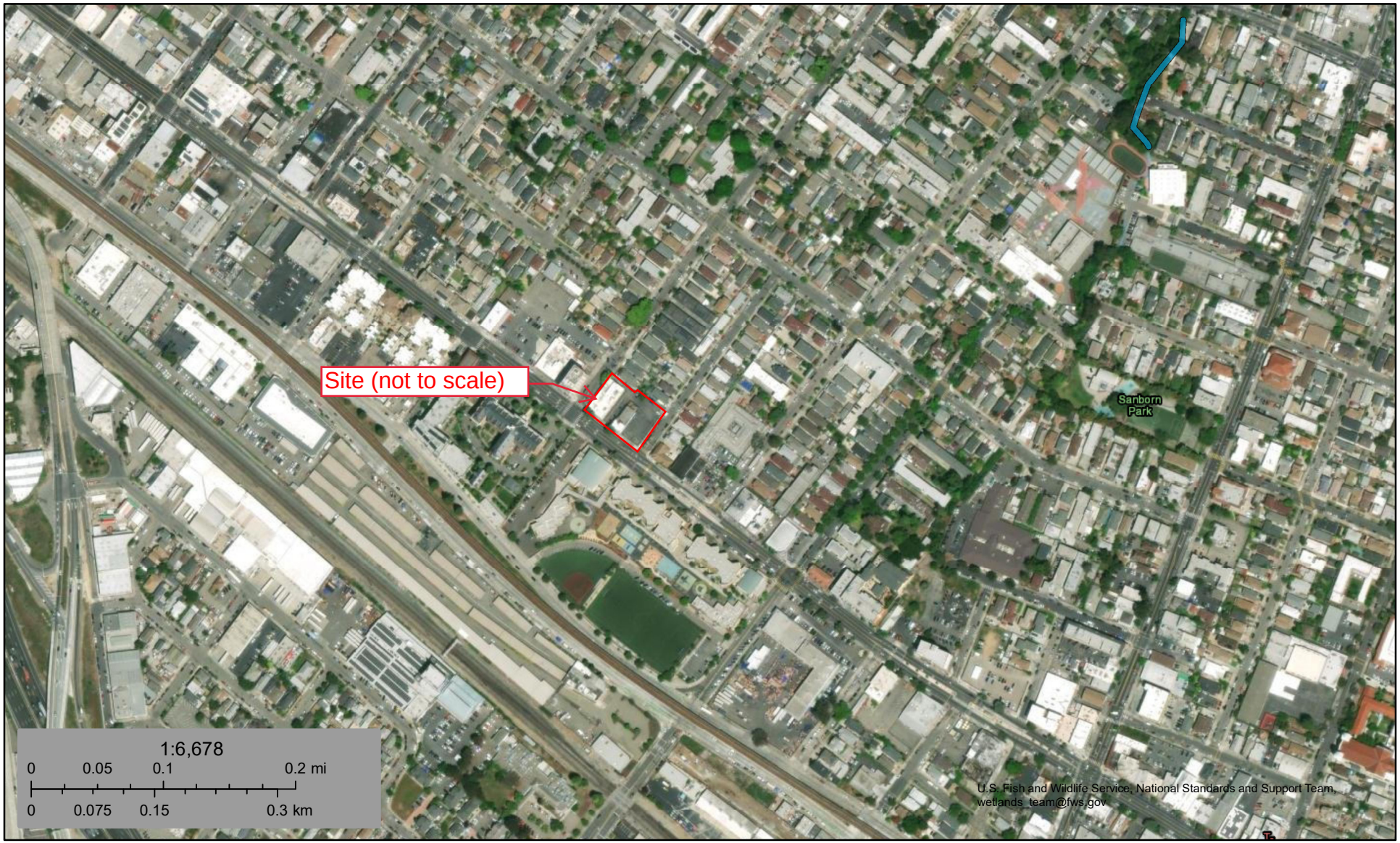

March 20, 2024

Wetlands

- Estuarine and Marine Deepwater
- Estuarine and Marine Wetland
- Freshwater Emergent Wetland
- Freshwater Forested/Shrub Wetland
- Freshwater Pond
- Lake
- Other
- Riverine

This map is for general reference only. The US Fish and Wildlife Service is not responsible for the accuracy or currentness of the base data shown on this map. All wetlands related data should be used in accordance with the layer metadata found on the Wetlands Mapper web site.

Appendix D – Air Quality

- California Air Pollution Control Officers Association. *California Emissions Estimator Model, 2700 International Boulevard Project.* s.l. : Bay Desert, Inc., March 13, 2024. CalEEMod 2022.1.1.22.
- Bay Area Air Quality Management District. Health Risk Screening and Modeling. [Online] [Cited: March 13, 2024.] https://www.baaqmd.gov/plans-and-climate/california-environmental-quality-act-ceqa/ceqa-tools/health-risk-screening-and-modeling.

2700 International Summary Report

Table of Contents

1. Basic Project Information

1.1. Basic Project Information

1.2. Land Use Types

1.3. User-Selected Emission Reduction Measures by Emissions Sector

2. Emissions Summary

2.1. Construction Emissions Compared Against Thresholds

2.4. Operations Emissions Compared Against Thresholds

6. Climate Risk Detailed Report

6.2. Initial Climate Risk Scores

6.3. Adjusted Climate Risk Scores

7. Health and Equity Details

7.3. Overall Health & Equity Scores

7.5. Evaluation Scorecard

1. Basic Project Information

1.1. Basic Project Information

Data Field	Value
Project Name	2700 International
Construction Start Date	1/2/2025
Operational Year	2026
Lead Agency	—
Land Use Scale	Project/site
Analysis Level for Defaults	County
Windspeed (m/s)	3.90
Precipitation (days)	1.20
Location	2700 International Blvd, Oakland, CA 94601, USA
County	Alameda
City	Oakland
Air District	Bay Area AQMD
Air Basin	San Francisco Bay Area
TAZ	1449
EDFZ	1
Electric Utility	Pacific Gas & Electric Company
Gas Utility	Pacific Gas & Electric
App Version	2022.1.1.22

1.2. Land Use Types

Land Use Subtype	Size	Unit	Lot Acreage	Building Area (sq ft)	Landscape Area (sq ft)	Special Landscape Area (sq ft)	Population	Description

Apartments Mid Rise	75.0	Dwelling Unit	0.61	99,529	4,503	0.00	211	—
General Office Building	4.00	1000sqft	0.09	4,000	0.00	0.00	—	—

1.3. User-Selected Emission Reduction Measures by Emissions Sector

No measures selected

2. Emissions Summary

2.1. Construction Emissions Compared Against Thresholds

Criteria Pollutants (lb/day for daily, ton/yr for annual) and GHGs (lb/day for daily, MT/yr for annual)

Un/Mit.	TOG	ROG	NOx	CO	SO2	PM10E	PM10D	PM10T	PM2.5E	PM2.5D	PM2.5T	BCO2	NBCO2	CO2T	CH4	N2O	R	CO2e
Daily, Summer (Max)	—	—	—	—	—	—	—	—	—	—	—	—	—	—	—	—	—	—
Unmit.	0.83	289	5.54	9.19	0.01	0.22	0.52	0.74	0.20	0.12	0.33	—	2,014	2,014	0.07	0.06	2.52	2,037
Daily, Winter (Max)	—	—	—	—	—	—	—	—	—	—	—	—	—	—	—	—	—	—
Unmit.	1.32	1.11	10.1	10.3	0.02	0.46	5.37	5.84	0.43	2.58	3.01	—	2,757	2,757	0.13	0.30	0.11	2,851
Average Daily (Max)	—	—	—	—	—	—	—	—	—	—	—	—	—	—	—	—	—	—
Unmit.	0.27	4.18	1.85	2.80	< 0.005	0.07	0.26	0.33	0.07	0.06	0.13	—	647	647	0.02	0.03	0.36	656
Annual (Max)	—	—	—	—	—	—	—	—	—	—	—	—	—	—	—	—	—	—
Unmit.	0.05	0.76	0.34	0.51	< 0.005	0.01	0.05	0.06	0.01	0.01	0.02	—	107	107	< 0.005	< 0.005	0.06	109

2.4. Operations Emissions Compared Against Thresholds

Criteria Pollutants (lb/day for daily, ton/yr for annual) and GHGs (lb/day for daily, MT/yr for annual)

Un/Mit.	TOG	ROG	NOx	CO	SO2	PM10E	PM10D	PM10T	PM2.5E	PM2.5D	PM2.5T	BCO2	NBCO2	CO2T	CH4	N2O	R	CO2e
Daily, Summer (Max)	—	—	—	—	—	—	—	—	—	—	—	—	—	—	—	—	—	—
Unmit.	2.03	4.47	1.92	14.0	0.03	0.09	1.95	2.04	0.09	0.49	0.59	38.3	3,613	3,652	4.02	0.13	8.45	3,798
Daily, Winter (Max)	—	—	—	—	—	—	—	—	—	—	—	—	—	—	—	—	—	—
Unmit.	1.55	4.00	2.04	9.55	0.03	0.09	1.95	2.04	0.09	0.49	0.58	38.3	3,478	3,517	4.04	0.13	0.92	3,659
Average Daily (Max)	—	—	—	—	—	—	—	—	—	—	—	—	—	—	—	—	—	—
Unmit.	1.56	4.05	1.21	10.3	0.02	0.03	1.81	1.84	0.03	0.46	0.49	38.3	2,428	2,467	4.01	0.12	3.82	2,607
Annual (Max)	—	—	—	—	—	—	—	—	—	—	—	—	—	—	—	—	—	—
Unmit.	0.28	0.74	0.22	1.89	< 0.005	0.01	0.33	0.34	0.01	0.08	0.09	6.34	402	408	0.66	0.02	0.63	432

6. Climate Risk Detailed Report

6.2. Initial Climate Risk Scores

Climate Hazard	Exposure Score	Sensitivity Score	Adaptive Capacity Score	Vulnerability Score
Temperature and Extreme Heat	N/A	N/A	N/A	N/A
Extreme Precipitation	2	0	0	N/A
Sea Level Rise	1	0	0	N/A
Wildfire	1	0	0	N/A
Flooding	N/A	N/A	N/A	N/A
Drought	N/A	N/A	N/A	N/A
Snowpack Reduction	N/A	N/A	N/A	N/A
Air Quality Degradation	0	0	0	N/A

The sensitivity score reflects the extent to which a project would be adversely affected by exposure to a climate hazard. Exposure is rated on a scale of 1 to 5, with a score of 5 representing the greatest exposure.
The adaptive capacity of a project refers to its ability to manage and reduce vulnerabilities from projected climate hazards. Adaptive capacity is rated on a scale of 1 to 5, with a score of 5 representing the greatest ability to adapt.
The overall vulnerability scores are calculated based on the potential impacts and adaptive capacity assessments for each hazard. Scores do not include implementation of climate risk reduction measures.

6.3. Adjusted Climate Risk Scores

Climate Hazard	Exposure Score	Sensitivity Score	Adaptive Capacity Score	Vulnerability Score
Temperature and Extreme Heat	N/A	N/A	N/A	N/A
Extreme Precipitation	2	1	1	3
Sea Level Rise	1	1	1	2
Wildfire	1	1	1	2
Flooding	N/A	N/A	N/A	N/A
Drought	N/A	N/A	N/A	N/A
Snowpack Reduction	N/A	N/A	N/A	N/A
Air Quality Degradation	1	1	1	2

The sensitivity score reflects the extent to which a project would be adversely affected by exposure to a climate hazard. Exposure is rated on a scale of 1 to 5, with a score of 5 representing the greatest exposure.
The adaptive capacity of a project refers to its ability to manage and reduce vulnerabilities from projected climate hazards. Adaptive capacity is rated on a scale of 1 to 5, with a score of 5 representing the greatest ability to adapt.
The overall vulnerability scores are calculated based on the potential impacts and adaptive capacity assessments for each hazard. Scores include implementation of climate risk reduction measures.

7. Health and Equity Details

7.3. Overall Health & Equity Scores

Metric	Result for Project Census Tract
CalEnviroScreen 4.0 Score for Project Location (a)	78.0
Healthy Places Index Score for Project Location (b)	11.0
Project Located in a Designated Disadvantaged Community (Senate Bill 535)	No
Project Located in a Low-Income Community (Assembly Bill 1550)	Yes
Project Located in a Community Air Protection Program Community (Assembly Bill 617)	No

a: The maximum CalEnviroScreen score is 100. A high score (i.e., greater than 50) reflects a higher pollution burden compared to other census tracts in the state.
b: The maximum Health Places Index score is 100. A high score (i.e., greater than 50) reflects healthier community conditions compared to other census tracts in the state.

7.5. Evaluation Scorecard

Health & Equity Evaluation Scorecard not completed.

2700 International Detailed Report

Table of Contents

1. Basic Project Information

1.1. Basic Project Information

1.2. Land Use Types

1.3. User-Selected Emission Reduction Measures by Emissions Sector

2. Emissions Summary

2.1. Construction Emissions Compared Against Thresholds

2.2. Construction Emissions by Year, Unmitigated

2.4. Operations Emissions Compared Against Thresholds

2.5. Operations Emissions by Sector, Unmitigated

3. Construction Emissions Details

3.1. Demolition (2025) - Unmitigated

3.3. Site Preparation (2025) - Unmitigated

3.5. Grading (2025) - Unmitigated

3.7. Building Construction (2025) - Unmitigated

3.9. Paving (2025) - Unmitigated

3.11. Architectural Coating (2025) - Unmitigated

4. Operations Emissions Details

4.1. Mobile Emissions by Land Use

4.1.1. Unmitigated

4.2. Energy

4.2.1. Electricity Emissions By Land Use - Unmitigated

4.2.3. Natural Gas Emissions By Land Use - Unmitigated

4.3. Area Emissions by Source

4.3.1. Unmitigated

4.4. Water Emissions by Land Use

4.4.1. Unmitigated

4.5. Waste Emissions by Land Use

4.5.1. Unmitigated

4.6. Refrigerant Emissions by Land Use

4.6.1. Unmitigated

4.7. Offroad Emissions By Equipment Type

4.7.1. Unmitigated

4.8. Stationary Emissions By Equipment Type

4.8.1. Unmitigated

4.9. User Defined Emissions By Equipment Type

4.9.1. Unmitigated

4.10. Soil Carbon Accumulation By Vegetation Type

4.10.1. Soil Carbon Accumulation By Vegetation Type - Unmitigated

4.10.2. Above and Belowground Carbon Accumulation by Land Use Type - Unmitigated

4.10.3. Avoided and Sequestered Emissions by Species - Unmitigated

5. Activity Data

5.1. Construction Schedule

5.2. Off-Road Equipment

5.2.1. Unmitigated

5.3. Construction Vehicles

5.3.1. Unmitigated

5.4. Vehicles

5.4.1. Construction Vehicle Control Strategies

5.5. Architectural Coatings

5.6. Dust Mitigation

5.6.1. Construction Earthmoving Activities

5.6.2. Construction Earthmoving Control Strategies

5.7. Construction Paving

5.8. Construction Electricity Consumption and Emissions Factors

5.9. Operational Mobile Sources

5.9.1. Unmitigated

5.10. Operational Area Sources

5.10.1. Hearths

5.10.1.1. Unmitigated

5.10.2. Architectural Coatings

5.10.3. Landscape Equipment

5.11. Operational Energy Consumption

5.11.1. Unmitigated

5.12. Operational Water and Wastewater Consumption

5.12.1. Unmitigated

5.13. Operational Waste Generation

5.13.1. Unmitigated

5.14. Operational Refrigeration and Air Conditioning Equipment

5.14.1. Unmitigated

5.15. Operational Off-Road Equipment

5.15.1. Unmitigated

5.16. Stationary Sources

5.16.1. Emergency Generators and Fire Pumps

5.16.2. Process Boilers

5.17. User Defined

5.18. Vegetation

5.18.1. Land Use Change

5.18.1.1. Unmitigated

5.18.1. Biomass Cover Type

5.18.1.1. Unmitigated

5.18.2. Sequestration

5.18.2.1. Unmitigated

6. Climate Risk Detailed Report

6.1. Climate Risk Summary

6.2. Initial Climate Risk Scores

6.3. Adjusted Climate Risk Scores

6.4. Climate Risk Reduction Measures

7. Health and Equity Details

7.1. CalEnviroScreen 4.0 Scores

7.2. Healthy Places Index Scores

7.3. Overall Health & Equity Scores

7.4. Health & Equity Measures

7.5. Evaluation Scorecard

7.6. Health & Equity Custom Measures

8. User Changes to Default Data

1. Basic Project Information

1.1. Basic Project Information

Data Field	Value
Project Name	2700 International
Construction Start Date	1/2/2025
Operational Year	2026
Lead Agency	—
Land Use Scale	Project/site
Analysis Level for Defaults	County
Windspeed (m/s)	3.90
Precipitation (days)	1.20
Location	2700 International Blvd, Oakland, CA 94601, USA
County	Alameda
City	Oakland
Air District	Bay Area AQMD
Air Basin	San Francisco Bay Area
TAZ	1449
EDFZ	1
Electric Utility	Pacific Gas & Electric Company
Gas Utility	Pacific Gas & Electric
App Version	2022.1.1.22

1.2. Land Use Types

Land Use Subtype	Size	Unit	Lot Acreage	Building Area (sq ft)	Landscape Area (sq ft)	Special Landscape Area (sq ft)	Population	Description

Apartments Mid Rise	75.0	Dwelling Unit	0.61	99,529	4,503	0.00	211	—
General Office Building	4.00	1000sqft	0.09	4,000	0.00	0.00	—	—

1.3. User-Selected Emission Reduction Measures by Emissions Sector

No measures selected

2. Emissions Summary

2.1. Construction Emissions Compared Against Thresholds

Criteria Pollutants (lb/day for daily, ton/yr for annual) and GHGs (lb/day for daily, MT/yr for annual)

Un/Mit.	TOG	ROG	NOx	CO	SO2	PM10E	PM10D	PM10T	PM2.5E	PM2.5D	PM2.5T	BCO2	NBCO2	CO2T	CH4	N2O	R	CO2e
Daily, Summer (Max)	—	—	—	—	—	—	—	—	—	—	—	—	—	—	—	—	—	—
Unmit.	0.83	289	5.54	9.19	0.01	0.22	0.52	0.74	0.20	0.12	0.33	—	2,014	2,014	0.07	0.06	2.52	2,037
Daily, Winter (Max)	—	—	—	—	—	—	—	—	—	—	—	—	—	—	—	—	—	—
Unmit.	1.32	1.11	10.1	10.3	0.02	0.46	5.37	5.84	0.43	2.58	3.01	—	2,757	2,757	0.13	0.30	0.11	2,851
Average Daily (Max)	—	—	—	—	—	—	—	—	—	—	—	—	—	—	—	—	—	—
Unmit.	0.27	4.18	1.85	2.80	< 0.005	0.07	0.26	0.33	0.07	0.06	0.13	—	647	647	0.02	0.03	0.36	656
Annual (Max)	—	—	—	—	—	—	—	—	—	—	—	—	—	—	—	—	—	—
Unmit.	0.05	0.76	0.34	0.51	< 0.005	0.01	0.05	0.06	0.01	0.01	0.02	—	107	107	< 0.005	< 0.005	0.06	109

2.2. Construction Emissions by Year, Unmitigated

Criteria Pollutants (lb/day for daily, ton/yr for annual) and GHGs (lb/day for daily, MT/yr for annual)

Year	TOG	ROG	NOx	CO	SO2	PM10E	PM10D	PM10T	PM2.5E	PM2.5D	PM2.5T	BCO2	NBCO2	CO2T	CH4	N2O	R	CO2e
Daily - Summer (Max)	—	—	—	—	—	—	—	—	—	—	—	—	—	—	—	—	—	—
2025	0.83	289	5.54	9.19	0.01	0.22	0.52	0.74	0.20	0.12	0.33	—	2,014	2,014	0.07	0.06	2.52	2,037
Daily - Winter (Max)	—	—	—	—	—	—	—	—	—	—	—	—	—	—	—	—	—	—
2025	1.32	1.11	10.1	10.3	0.02	0.46	5.37	5.84	0.43	2.58	3.01	—	2,757	2,757	0.13	0.30	0.11	2,851
Average Daily	—	—	—	—	—	—	—	—	—	—	—	—	—	—	—	—	—	—
2025	0.27	4.18	1.85	2.80	< 0.005	0.07	0.26	0.33	0.07	0.06	0.13	—	647	647	0.02	0.03	0.36	656
Annual	—	—	—	—	—	—	—	—	—	—	—	—	—	—	—	—	—	—
2025	0.05	0.76	0.34	0.51	< 0.005	0.01	0.05	0.06	0.01	0.01	0.02	—	107	107	< 0.005	< 0.005	0.06	109

2.4. Operations Emissions Compared Against Thresholds

Criteria Pollutants (lb/day for daily, ton/yr for annual) and GHGs (lb/day for daily, MT/yr for annual)

Un/Mit.	TOG	ROG	NOx	CO	SO2	PM10E	PM10D	PM10T	PM2.5E	PM2.5D	PM2.5T	BCO2	NBCO2	CO2T	CH4	N2O	R	CO2e
Daily, Summer (Max)	—	—	—	—	—	—	—	—	—	—	—	—	—	—	—	—	—	—
Unmit.	2.03	4.47	1.92	14.0	0.03	0.09	1.95	2.04	0.09	0.49	0.59	38.3	3,613	3,652	4.02	0.13	8.45	3,798
Daily, Winter (Max)	—	—	—	—	—	—	—	—	—	—	—	—	—	—	—	—	—	—
Unmit.	1.55	4.00	2.04	9.55	0.03	0.09	1.95	2.04	0.09	0.49	0.58	38.3	3,478	3,517	4.04	0.13	0.92	3,659
Average Daily (Max)	—	—	—	—	—	—	—	—	—	—	—	—	—	—	—	—	—	—
Unmit.	1.56	4.05	1.21	10.3	0.02	0.03	1.81	1.84	0.03	0.46	0.49	38.3	2,428	2,467	4.01	0.12	3.82	2,607

Annual (Max)	—	—	—	—	—	—	—	—	—	—	—	—	—	—	—	—	—	—
Unmit.	0.28	0.74	0.22	1.89	< 0.005	0.01	0.33	0.34	0.01	0.08	0.09	6.34	402	408	0.66	0.02	0.63	432

2.5. Operations Emissions by Sector, Unmitigated

Criteria Pollutants (lb/day for daily, ton/yr for annual) and GHGs (lb/day for daily, MT/yr for annual)

Sector	TOG	ROG	NOx	CO	SO2	PM10E	PM10D	PM10T	PM2.5E	PM2.5D	PM2.5T	BCO2	NBCO2	CO2T	CH4	N2O	R	CO2e
Daily, Summer (Max)	—	—	—	—	—	—	—	—	—	—	—	—	—	—	—	—	—	—
Mobile	1.49	1.40	0.95	9.15	0.02	0.01	1.95	1.96	0.01	0.49	0.51	—	2,217	2,217	0.11	0.10	7.73	2,258
Area	0.52	3.06	0.78	4.74	< 0.005	0.06	—	0.06	0.06	—	0.06	0.00	952	952	0.02	< 0.005	—	953
Energy	0.02	0.01	0.19	0.09	< 0.005	0.02	—	0.02	0.02	—	0.02	—	432	432	0.05	< 0.005	—	435
Water	—	—	—	—	—	—	—	—	—	—	—	6.47	12.4	18.8	0.67	0.02	—	40.2
Waste	—	—	—	—	—	—	—	—	—	—	—	31.8	0.00	31.8	3.18	0.00	—	111
Refrig.	—	—	—	—	—	—	—	—	—	—	—	—	—	—	—	—	0.72	0.72
Total	2.03	4.47	1.92	14.0	0.03	0.09	1.95	2.04	0.09	0.49	0.59	38.3	3,613	3,652	4.02	0.13	8.45	3,798
Daily, Winter (Max)	—	—	—	—	—	—	—	—	—	—	—	—	—	—	—	—	—	—
Mobile	1.44	1.34	1.11	9.14	0.02	0.01	1.95	1.96	0.01	0.49	0.51	—	2,094	2,094	0.12	0.11	0.20	2,131
Area	0.09	2.65	0.74	0.31	< 0.005	0.06	—	0.06	0.06	—	0.06	0.00	940	940	0.02	< 0.005	—	941
Energy	0.02	0.01	0.19	0.09	< 0.005	0.02	—	0.02	0.02	—	0.02	—	432	432	0.05	< 0.005	—	435
Water	—	—	—	—	—	—	—	—	—	—	—	6.47	12.4	18.8	0.67	0.02	—	40.2
Waste	—	—	—	—	—	—	—	—	—	—	—	31.8	0.00	31.8	3.18	0.00	—	111
Refrig.	—	—	—	—	—	—	—	—	—	—	—	—	—	—	—	—	0.72	0.72
Total	1.55	4.00	2.04	9.55	0.03	0.09	1.95	2.04	0.09	0.49	0.58	38.3	3,478	3,517	4.04	0.13	0.92	3,659
Average Daily	—	—	—	—	—	—	—	—	—	—	—	—	—	—	—	—	—	—

Mobile	1.32	1.23	0.97	8.06	0.02	0.01	1.81	1.82	0.01	0.46	0.47	—	1,954	1,954	0.11	0.10	3.10	1,990
Area	0.21	2.81	0.04	2.19	< 0.005	< 0.005	—	< 0.005	< 0.005	—	< 0.005	0.00	29.1	29.1	< 0.005	< 0.005	—	29.2
Energy	0.02	0.01	0.19	0.09	< 0.005	0.02	—	0.02	0.02	—	0.02	—	432	432	0.05	< 0.005	—	435
Water	—	—	—	—	—	—	—	—	—	—	—	6.47	12.4	18.8	0.67	0.02	—	40.2
Waste	—	—	—	—	—	—	—	—	—	—	—	31.8	0.00	31.8	3.18	0.00	—	111
Refrig.	—	—	—	—	—	—	—	—	—	—	—	—	—	—	—	—	0.72	0.72
Total	1.56	4.05	1.21	10.3	0.02	0.03	1.81	1.84	0.03	0.46	0.49	38.3	2,428	2,467	4.01	0.12	3.82	2,607
Annual	—	—	—	—	—	—	—	—	—	—	—	—	—	—	—	—	—	—
Mobile	0.24	0.22	0.18	1.47	< 0.005	< 0.005	0.33	0.33	< 0.005	0.08	0.09	—	324	324	0.02	0.02	0.51	330
Area	0.04	0.51	0.01	0.40	< 0.005	< 0.005	—	< 0.005	< 0.005	—	< 0.005	0.00	4.82	4.82	< 0.005	< 0.005	—	4.83
Energy	< 0.005	< 0.005	0.04	0.02	< 0.005	< 0.005	—	< 0.005	< 0.005	—	< 0.005	—	71.6	71.6	0.01	< 0.005	—	72.0
Water	—	—	—	—	—	—	—	—	—	—	—	1.07	2.05	3.12	0.11	< 0.005	—	6.66
Waste	—	—	—	—	—	—	—	—	—	—	—	5.27	0.00	5.27	0.53	0.00	—	18.4
Refrig.	—	—	—	—	—	—	—	—	—	—	—	—	—	—	—	—	0.12	0.12
Total	0.28	0.74	0.22	1.89	< 0.005	0.01	0.33	0.34	0.01	0.08	0.09	6.34	402	408	0.66	0.02	0.63	432

3. Construction Emissions Details

3.1. Demolition (2025) - Unmitigated

Criteria Pollutants (lb/day for daily, ton/yr for annual) and GHGs (lb/day for daily, MT/yr for annual)

Location	TOG	ROG	NOx	CO	SO2	PM10E	PM10D	PM10T	PM2.5E	PM2.5D	PM2.5T	BCO2	NBCO2	CO2T	CH4	N2O	R	CO2e
Onsite	—	—	—	—	—	—	—	—	—	—	—	—	—	—	—	—	—	—
Daily, Summer (Max)	—	—	—	—	—	—	—	—	—	—	—	—	—	—	—	—	—	—
Daily, Winter (Max)	—	—	—	—	—	—	—	—	—	—	—	—	—	—	—	—	—	—

Off-Road Equipment	0.56	0.47	4.33	5.65	0.01	0.16	—	0.16	0.14	—	0.14	—	852	852	0.03	0.01	—	855
Demolition	—	—	—	—	—	—	2.35	2.35	—	0.36	0.36	—	—	—	—	—	—	—
Onsite truck	0.00	0.00	0.00	0.00	0.00	0.00	0.00	0.00	0.00	0.00	0.00	—	0.00	0.00	0.00	0.00	0.00	0.00
Average Daily	—	—	—	—	—	—	—	—	—	—	—	—	—	—	—	—	—	—
Off-Road Equipment	0.02	0.01	0.12	0.15	< 0.005	< 0.005	—	< 0.005	< 0.005	—	< 0.005	—	23.3	23.3	< 0.005	< 0.005	—	23.4
Demolition	—	—	—	—	—	—	0.06	0.06	—	0.01	0.01	—	—	—	—	—	—	—
Onsite truck	0.00	0.00	0.00	0.00	0.00	0.00	0.00	0.00	0.00	0.00	0.00	—	0.00	0.00	0.00	0.00	0.00	0.00
Annual	—	—	—	—	—	—	—	—	—	—	—	—	—	—	—	—	—	—
Off-Road Equipment	< 0.005	< 0.005	0.02	0.03	< 0.005	< 0.005	—	< 0.005	< 0.005	—	< 0.005	—	3.87	3.87	< 0.005	< 0.005	—	3.88
Demolition	—	—	—	—	—	—	0.01	0.01	—	< 0.005	< 0.005	—	—	—	—	—	—	—
Onsite truck	0.00	0.00	0.00	0.00	0.00	0.00	0.00	0.00	0.00	0.00	0.00	—	0.00	0.00	0.00	0.00	0.00	0.00
Offsite	—	—	—	—	—	—	—	—	—	—	—	—	—	—	—	—	—	—
Daily, Summer (Max)	—	—	—	—	—	—	—	—	—	—	—	—	—	—	—	—	—	—
Daily, Winter (Max)	—	—	—	—	—	—	—	—	—	—	—	—	—	—	—	—	—	—
Worker	0.03	0.03	0.03	0.34	0.00	0.00	0.08	0.08	0.00	0.02	0.02	—	80.3	80.3	< 0.005	< 0.005	0.01	81.4
Vendor	0.00	0.00	0.00	0.00	0.00	0.00	0.00	0.00	0.00	0.00	0.00	—	0.00	0.00	0.00	0.00	0.00	0.00
Hauling	0.14	0.04	2.33	0.89	0.01	0.03	0.48	0.52	0.03	0.13	0.17	—	1,825	1,825	0.10	0.29	0.11	1,915
Average Daily	—	—	—	—	—	—	—	—	—	—	—	—	—	—	—	—	—	—

Worker	< 0.005	< 0.005	< 0.005	0.01	0.00	0.00	< 0.005	< 0.005	0.00	< 0.005	< 0.005	—	2.22	2.22	< 0.005	< 0.005	< 0.005	2.25
Vendor	0.00	0.00	0.00	0.00	0.00	0.00	0.00	0.00	0.00	0.00	0.00	—	0.00	0.00	0.00	0.00	0.00	0.00
Hauling	< 0.005	< 0.005	0.06	0.02	< 0.005	< 0.005	0.01	0.01	< 0.005	< 0.005	< 0.005	—	50.0	50.0	< 0.005	0.01	0.05	52.5
Annual	—	—	—	—	—	—	—	—	—	—	—	—	—	—	—	—	—	—
Worker	< 0.005	< 0.005	< 0.005	< 0.005	0.00	0.00	< 0.005	< 0.005	0.00	< 0.005	< 0.005	—	0.37	0.37	< 0.005	< 0.005	< 0.005	0.37
Vendor	0.00	0.00	0.00	0.00	0.00	0.00	0.00	0.00	0.00	0.00	0.00	—	0.00	0.00	0.00	0.00	0.00	0.00
Hauling	< 0.005	< 0.005	0.01	< 0.005	< 0.005	< 0.005	< 0.005	< 0.005	< 0.005	< 0.005	< 0.005	—	8.27	8.27	< 0.005	< 0.005	0.01	8.69

3.3. Site Preparation (2025) - Unmitigated

Criteria Pollutants (lb/day for daily, ton/yr for annual) and GHGs (lb/day for daily, MT/yr for annual)

Location	TOG	ROG	NOx	CO	SO2	PM10E	PM10D	PM10T	PM2.5E	PM2.5D	PM2.5T	BCO2	NBCO2	CO2T	CH4	N2O	R	CO2e
Onsite	—	—	—	—	—	—	—	—	—	—	—	—	—	—	—	—	—	—
Daily, Summer (Max)	—	—	—	—	—	—	—	—	—	—	—	—	—	—	—	—	—	—
Daily, Winter (Max)	—	—	—	—	—	—	—	—	—	—	—	—	—	—	—	—	—	—
Off-Road Equipment	0.56	0.47	4.16	5.57	0.01	0.21	—	0.21	0.20	—	0.20	—	859	859	0.03	0.01	—	862
Dust From Material Movement	—	—	—	—	—	—	0.53	0.53	—	0.06	0.06	—	—	—	—	—	—	—
Onsite truck	0.00	0.00	0.00	0.00	0.00	0.00	0.00	0.00	0.00	0.00	0.00	—	0.00	0.00	0.00	0.00	0.00	0.00
Average Daily	—	—	—	—	—	—	—	—	—	—	—	—	—	—	—	—	—	—
Off-Road Equipment	< 0.005	< 0.005	0.01	0.02	< 0.005	< 0.005	—	< 0.005	< 0.005	—	< 0.005	—	2.35	2.35	< 0.005	< 0.005	—	2.36

Dust From Material Movement	—	—	—	—	—	—	< 0.005	< 0.005	—	< 0.005	< 0.005	—	—	—	—	—	—	—
Onsite truck	0.00	0.00	0.00	0.00	0.00	0.00	0.00	0.00	0.00	0.00	0.00	—	0.00	0.00	0.00	0.00	0.00	0.00
Annual	—	—	—	—	—	—	—	—	—	—	—	—	—	—	—	—	—	—
Off-Road Equipment	< 0.005	< 0.005	< 0.005	< 0.005	< 0.005	< 0.005	—	< 0.005	< 0.005	—	< 0.005	—	0.39	0.39	< 0.005	< 0.005	—	0.39
Dust From Material Movement	—	—	—	—	—	—	< 0.005	< 0.005	—	< 0.005	< 0.005	—	—	—	—	—	—	—
Onsite truck	0.00	0.00	0.00	0.00	0.00	0.00	0.00	0.00	0.00	0.00	0.00	—	0.00	0.00	0.00	0.00	0.00	0.00
Offsite	—	—	—	—	—	—	—	—	—	—	—	—	—	—	—	—	—	—
Daily, Summer (Max)	—	—	—	—	—	—	—	—	—	—	—	—	—	—	—	—	—	—
Daily, Winter (Max)	—	—	—	—	—	—	—	—	—	—	—	—	—	—	—	—	—	—
Worker	0.02	0.02	0.02	0.17	0.00	0.00	0.04	0.04	0.00	0.01	0.01	—	40.2	40.2	< 0.005	< 0.005	< 0.005	40.7
Vendor	0.00	0.00	0.00	0.00	0.00	0.00	0.00	0.00	0.00	0.00	0.00	—	0.00	0.00	0.00	0.00	0.00	0.00
Hauling	0.00	0.00	0.00	0.00	0.00	0.00	0.00	0.00	0.00	0.00	0.00	—	0.00	0.00	0.00	0.00	0.00	0.00
Average Daily	—	—	—	—	—	—	—	—	—	—	—	—	—	—	—	—	—	—
Worker	< 0.005	< 0.005	< 0.005	< 0.005	0.00	0.00	< 0.005	< 0.005	0.00	< 0.005	< 0.005	—	0.11	0.11	< 0.005	< 0.005	< 0.005	0.11
Vendor	0.00	0.00	0.00	0.00	0.00	0.00	0.00	0.00	0.00	0.00	0.00	—	0.00	0.00	0.00	0.00	0.00	0.00
Hauling	0.00	0.00	0.00	0.00	0.00	0.00	0.00	0.00	0.00	0.00	0.00	—	0.00	0.00	0.00	0.00	0.00	0.00
Annual	—	—	—	—	—	—	—	—	—	—	—	—	—	—	—	—	—	—
Worker	< 0.005	< 0.005	< 0.005	< 0.005	0.00	0.00	< 0.005	< 0.005	0.00	< 0.005	< 0.005	—	0.02	0.02	< 0.005	< 0.005	< 0.005	0.02
Vendor	0.00	0.00	0.00	0.00	0.00	0.00	0.00	0.00	0.00	0.00	0.00	—	0.00	0.00	0.00	0.00	0.00	0.00

Hauling	0.00	0.00	0.00	0.00	0.00	0.00	0.00	0.00	0.00	0.00	0.00	—	0.00	0.00	0.00	0.00	0.00	0.00

3.5. Grading (2025) - Unmitigated

Criteria Pollutants (lb/day for daily, ton/yr for annual) and GHGs (lb/day for daily, MT/yr for annual)

Location	TOG	ROG	NOx	CO	SO2	PM10E	PM10D	PM10T	PM2.5E	PM2.5D	PM2.5T	BCO2	NBCO2	CO2T	CH4	N2O	R	CO2e
Onsite	—	—	—	—	—	—	—	—	—	—	—	—	—	—	—	—	—	—
Daily, Summer (Max)	—	—	—	—	—	—	—	—	—	—	—	—	—	—	—	—	—	—
Daily, Winter (Max)	—	—	—	—	—	—	—	—	—	—	—	—	—	—	—	—	—	—
Off-Road Equipment	1.29	1.09	10.1	10.0	0.02	0.46	—	0.46	0.43	—	0.43	—	1,714	1,714	0.07	0.01	—	1,720
Dust From Material Movement	—	—	—	—	—	—	5.31	5.31	—	2.57	2.57	—	—	—	—	—	—	—
Onsite truck	0.00	0.00	0.00	0.00	0.00	0.00	0.00	0.00	0.00	0.00	0.00	—	0.00	0.00	0.00	0.00	0.00	0.00
Average Daily	—	—	—	—	—	—	—	—	—	—	—	—	—	—	—	—	—	—
Off-Road Equipment	0.01	0.01	0.06	0.06	< 0.005	< 0.005	—	< 0.005	< 0.005	—	< 0.005	—	9.39	9.39	< 0.005	< 0.005	—	9.42
Dust From Material Movement	—	—	—	—	—	—	0.03	0.03	—	0.01	0.01	—	—	—	—	—	—	—
Onsite truck	0.00	0.00	0.00	0.00	0.00	0.00	0.00	0.00	0.00	0.00	0.00	—	0.00	0.00	0.00	0.00	0.00	0.00
Annual	—	—	—	—	—	—	—	—	—	—	—	—	—	—	—	—	—	—
Off-Road Equipment	< 0.005	< 0.005	0.01	0.01	< 0.005	< 0.005	—	< 0.005	< 0.005	—	< 0.005	—	1.55	1.55	< 0.005	< 0.005	—	1.56

Dust From Material Movement	—	—	—	—	—	—	0.01	0.01	—	< 0.005	< 0.005	—	—	—	—	—	—	—
Onsite truck	0.00	0.00	0.00	0.00	0.00	0.00	0.00	0.00	0.00	0.00	0.00	—	0.00	0.00	0.00	0.00	0.00	0.00
Offsite	—	—	—	—	—	—	—	—	—	—	—	—	—	—	—	—	—	—
Daily, Summer (Max)	—	—	—	—	—	—	—	—	—	—	—	—	—	—	—	—	—	—
Daily, Winter (Max)	—	—	—	—	—	—	—	—	—	—	—	—	—	—	—	—	—	—
Worker	0.03	0.02	0.02	0.26	0.00	0.00	0.06	0.06	0.00	0.01	0.01	—	60.2	60.2	< 0.005	< 0.005	0.01	61.1
Vendor	0.00	0.00	0.00	0.00	0.00	0.00	0.00	0.00	0.00	0.00	0.00	—	0.00	0.00	0.00	0.00	0.00	0.00
Hauling	0.00	0.00	0.00	0.00	0.00	0.00	0.00	0.00	0.00	0.00	0.00	—	0.00	0.00	0.00	0.00	0.00	0.00
Average Daily	—	—	—	—	—	—	—	—	—	—	—	—	—	—	—	—	—	—
Worker	< 0.005	< 0.005	< 0.005	< 0.005	0.00	0.00	< 0.005	< 0.005	0.00	< 0.005	< 0.005	—	0.33	0.33	< 0.005	< 0.005	< 0.005	0.34
Vendor	0.00	0.00	0.00	0.00	0.00	0.00	0.00	0.00	0.00	0.00	0.00	—	0.00	0.00	0.00	0.00	0.00	0.00
Hauling	0.00	0.00	0.00	0.00	0.00	0.00	0.00	0.00	0.00	0.00	0.00	—	0.00	0.00	0.00	0.00	0.00	0.00
Annual	—	—	—	—	—	—	—	—	—	—	—	—	—	—	—	—	—	—
Worker	< 0.005	< 0.005	< 0.005	< 0.005	0.00	0.00	< 0.005	< 0.005	0.00	< 0.005	< 0.005	—	0.06	0.06	< 0.005	< 0.005	< 0.005	0.06
Vendor	0.00	0.00	0.00	0.00	0.00	0.00	0.00	0.00	0.00	0.00	0.00	—	0.00	0.00	0.00	0.00	0.00	0.00
Hauling	0.00	0.00	0.00	0.00	0.00	0.00	0.00	0.00	0.00	0.00	0.00	—	0.00	0.00	0.00	0.00	0.00	0.00

3.7. Building Construction (2025) - Unmitigated

Criteria Pollutants (lb/day for daily, ton/yr for annual) and GHGs (lb/day for daily, MT/yr for annual)

Location	TOG	ROG	NOx	CO	SO2	PM10E	PM10D	PM10T	PM2.5E	PM2.5D	PM2.5T	BCO2	NBCO2	CO2T	CH4	N2O	R	CO2e
Onsite	—	—	—	—	—	—	—	—	—	—	—	—	—	—	—	—	—	—

Daily, Summer (Max)	—	—	—	—	—	—	—	—	—	—	—	—	—	—	—	—	—	—
Off-Road Equipment	0.62	0.52	5.14	6.94	0.01	0.22	—	0.22	0.20	—	0.20	—	1,305	1,305	0.05	0.01	—	1,309
Onsite truck	0.00	0.00	0.00	0.00	0.00	0.00	0.00	0.00	0.00	0.00	0.00	—	0.00	0.00	0.00	0.00	0.00	0.00
Daily, Winter (Max)	—	—	—	—	—	—	—	—	—	—	—	—	—	—	—	—	—	—
Off-Road Equipment	0.62	0.52	5.14	6.94	0.01	0.22	—	0.22	0.20	—	0.20	—	1,305	1,305	0.05	0.01	—	1,309
Onsite truck	0.00	0.00	0.00	0.00	0.00	0.00	0.00	0.00	0.00	0.00	0.00	—	0.00	0.00	0.00	0.00	0.00	0.00
Average Daily	—	—	—	—	—	—	—	—	—	—	—	—	—	—	—	—	—	—
Off-Road Equipment	0.17	0.14	1.41	1.90	< 0.005	0.06	—	0.06	0.05	—	0.05	—	357	357	0.01	< 0.005	—	359
Onsite truck	0.00	0.00	0.00	0.00	0.00	0.00	0.00	0.00	0.00	0.00	0.00	—	0.00	0.00	0.00	0.00	0.00	0.00
Annual	—	—	—	—	—	—	—	—	—	—	—	—	—	—	—	—	—	—
Off-Road Equipment	0.03	0.03	0.26	0.35	< 0.005	0.01	—	0.01	0.01	—	0.01	—	59.2	59.2	< 0.005	< 0.005	—	59.4
Onsite truck	0.00	0.00	0.00	0.00	0.00	0.00	0.00	0.00	0.00	0.00	0.00	—	0.00	0.00	0.00	0.00	0.00	0.00
Offsite	—	—	—	—	—	—	—	—	—	—	—	—	—	—	—	—	—	—
Daily, Summer (Max)	—	—	—	—	—	—	—	—	—	—	—	—	—	—	—	—	—	—
Worker	0.19	0.19	0.12	2.12	0.00	0.00	0.46	0.46	0.00	0.11	0.11	—	479	479	0.01	0.02	1.90	486
Vendor	0.02	0.01	0.28	0.12	< 0.005	< 0.005	0.06	0.06	< 0.005	0.02	0.02	—	231	231	0.01	0.03	0.62	242
Hauling	0.00	0.00	0.00	0.00	0.00	0.00	0.00	0.00	0.00	0.00	0.00	—	0.00	0.00	0.00	0.00	0.00	0.00

Daily, Winter (Max)	—	—	—	—	—	—	—	—	—	—	—	—	—	—	—	—	—	—
Worker	0.19	0.18	0.17	1.88	0.00	0.00	0.46	0.46	0.00	0.11	0.11	—	444	444	0.01	0.02	0.05	450
Vendor	0.02	0.01	0.30	0.13	< 0.005	< 0.005	0.06	0.06	< 0.005	0.02	0.02	—	231	231	0.01	0.03	0.02	241
Hauling	0.00	0.00	0.00	0.00	0.00	0.00	0.00	0.00	0.00	0.00	0.00	—	0.00	0.00	0.00	0.00	0.00	0.00
Average Daily	—	—	—	—	—	—	—	—	—	—	—	—	—	—	—	—	—	—
Worker	0.05	0.05	0.04	0.50	0.00	0.00	0.13	0.13	0.00	0.03	0.03	—	122	122	< 0.005	0.01	0.23	124
Vendor	< 0.005	< 0.005	0.08	0.03	< 0.005	< 0.005	0.02	0.02	< 0.005	< 0.005	0.01	—	63.3	63.3	< 0.005	0.01	0.07	66.2
Hauling	0.00	0.00	0.00	0.00	0.00	0.00	0.00	0.00	0.00	0.00	0.00	—	0.00	0.00	0.00	0.00	0.00	0.00
Annual	—	—	—	—	—	—	—	—	—	—	—	—	—	—	—	—	—	—
Worker	0.01	0.01	0.01	0.09	0.00	0.00	0.02	0.02	0.00	0.01	0.01	—	20.3	20.3	< 0.005	< 0.005	0.04	20.6
Vendor	< 0.005	< 0.005	0.01	0.01	< 0.005	< 0.005	< 0.005	< 0.005	< 0.005	< 0.005	< 0.005	—	10.5	10.5	< 0.005	< 0.005	0.01	11.0
Hauling	0.00	0.00	0.00	0.00	0.00	0.00	0.00	0.00	0.00	0.00	0.00	—	0.00	0.00	0.00	0.00	0.00	0.00

3.9. Paving (2025) - Unmitigated

Criteria Pollutants (lb/day for daily, ton/yr for annual) and GHGs (lb/day for daily, MT/yr for annual)

Location	TOG	ROG	NOx	CO	SO2	PM10E	PM10D	PM10T	PM2.5E	PM2.5D	PM2.5T	BCO2	NBCO2	CO2T	CH4	N2O	R	CO2e
Onsite	—	—	—	—	—	—	—	—	—	—	—	—	—	—	—	—	—	—
Daily, Summer (Max)	—	—	—	—	—	—	—	—	—	—	—	—	—	—	—	—	—	—
Off-Road Equipment	0.61	0.51	4.37	5.31	0.01	0.19	—	0.19	0.18	—	0.18	—	823	823	0.03	0.01	—	826
Paving	—	0.00	—	—	—	—	—	—	—	—	—	—	—	—	—	—	—	—
Onsite truck	0.00	0.00	0.00	0.00	0.00	0.00	0.00	0.00	0.00	0.00	0.00	—	0.00	0.00	0.00	0.00	0.00	0.00

Daily, Winter (Max)	—	—	—	—	—	—	—	—	—	—	—	—	—	—	—	—	—	—
Average Daily	—	—	—	—	—	—	—	—	—	—	—	—	—	—	—	—	—	—
Off-Road Equipment	0.01	0.01	0.06	0.07	< 0.005	< 0.005	—	< 0.005	< 0.005	—	< 0.005	—	11.3	11.3	< 0.005	< 0.005	—	11.3
Paving	—	0.00	—	—	—	—	—	—	—	—	—	—	—	—	—	—	—	—
Onsite truck	0.00	0.00	0.00	0.00	0.00	0.00	0.00	0.00	0.00	0.00	0.00	—	0.00	0.00	0.00	0.00	0.00	0.00
Annual	—	—	—	—	—	—	—	—	—	—	—	—	—	—	—	—	—	—
Off-Road Equipment	< 0.005	< 0.005	0.01	0.01	< 0.005	< 0.005	—	< 0.005	< 0.005	—	< 0.005	—	1.87	1.87	< 0.005	< 0.005	—	1.87
Paving	—	0.00	—	—	—	—	—	—	—	—	—	—	—	—	—	—	—	—
Onsite truck	0.00	0.00	0.00	0.00	0.00	0.00	0.00	0.00	0.00	0.00	0.00	—	0.00	0.00	0.00	0.00	0.00	0.00
Offsite	—	—	—	—	—	—	—	—	—	—	—	—	—	—	—	—	—	—
Daily, Summer (Max)	—	—	—	—	—	—	—	—	—	—	—	—	—	—	—	—	—	—
Worker	0.06	0.06	0.04	0.67	0.00	0.00	0.14	0.14	0.00	0.03	0.03	—	152	152	< 0.005	0.01	0.60	154
Vendor	0.00	0.00	0.00	0.00	0.00	0.00	0.00	0.00	0.00	0.00	0.00	—	0.00	0.00	0.00	0.00	0.00	0.00
Hauling	0.00	0.00	0.00	0.00	0.00	0.00	0.00	0.00	0.00	0.00	0.00	—	0.00	0.00	0.00	0.00	0.00	0.00
Daily, Winter (Max)	—	—	—	—	—	—	—	—	—	—	—	—	—	—	—	—	—	—
Average Daily	—	—	—	—	—	—	—	—	—	—	—	—	—	—	—	—	—	—
Worker	< 0.005	< 0.005	< 0.005	0.01	0.00	0.00	< 0.005	< 0.005	0.00	< 0.005	< 0.005	—	1.94	1.94	< 0.005	< 0.005	< 0.005	1.97
Vendor	0.00	0.00	0.00	0.00	0.00	0.00	0.00	0.00	0.00	0.00	0.00	—	0.00	0.00	0.00	0.00	0.00	0.00
Hauling	0.00	0.00	0.00	0.00	0.00	0.00	0.00	0.00	0.00	0.00	0.00	—	0.00	0.00	0.00	0.00	0.00	0.00
Annual	—	—	—	—	—	—	—	—	—	—	—	—	—	—	—	—	—	—

Worker	< 0.005	< 0.005	< 0.005	< 0.005	0.00	0.00	< 0.005	< 0.005	0.00	< 0.005	< 0.005	—	0.32	0.32	< 0.005	< 0.005	< 0.005	0.33
Vendor	0.00	0.00	0.00	0.00	0.00	0.00	0.00	0.00	0.00	0.00	0.00	—	0.00	0.00	0.00	0.00	0.00	0.00
Hauling	0.00	0.00	0.00	0.00	0.00	0.00	0.00	0.00	0.00	0.00	0.00	—	0.00	0.00	0.00	0.00	0.00	0.00

3.11. Architectural Coating (2025) - Unmitigated

Criteria Pollutants (lb/day for daily, ton/yr for annual) and GHGs (lb/day for daily, MT/yr for annual)

Location	TOG	ROG	NOx	CO	SO2	PM10E	PM10D	PM10T	PM2.5E	PM2.5D	PM2.5T	BCO2	NBCO2	CO2T	CH4	N2O	R	CO2e
Onsite	—	—	—	—	—	—	—	—	—	—	—	—	—	—	—	—	—	—
Daily, Summer (Max)	—	—	—	—	—	—	—	—	—	—	—	—	—	—	—	—	—	—
Off-Road Equipment	0.15	0.13	0.88	1.14	< 0.005	0.03	—	0.03	0.03	—	0.03	—	134	134	0.01	< 0.005	—	134
Architectural Coatings	—	289	—	—	—	—	—	—	—	—	—	—	—	—	—	—	—	—
Onsite truck	0.00	0.00	0.00	0.00	0.00	0.00	0.00	0.00	0.00	0.00	0.00	—	0.00	0.00	0.00	0.00	0.00	0.00
Daily, Winter (Max)	—	—	—	—	—	—	—	—	—	—	—	—	—	—	—	—	—	—
Average Daily	—	—	—	—	—	—	—	—	—	—	—	—	—	—	—	—	—	—
Off-Road Equipment	< 0.005	< 0.005	0.01	0.02	< 0.005	< 0.005	—	< 0.005	< 0.005	—	< 0.005	—	1.83	1.83	< 0.005	< 0.005	—	1.84
Architectural Coatings	—	3.95	—	—	—	—	—	—	—	—	—	—	—	—	—	—	—	—
Onsite truck	0.00	0.00	0.00	0.00	0.00	0.00	0.00	0.00	0.00	0.00	0.00	—	0.00	0.00	0.00	0.00	0.00	0.00
Annual	—	—	—	—	—	—	—	—	—	—	—	—	—	—	—	—	—	—

Off-Road Equipment	< 0.005	< 0.005	< 0.005	< 0.005	< 0.005	< 0.005	—	< 0.005	< 0.005	—	< 0.005	—	0.30	0.30	< 0.005	< 0.005	—	0.30
Architectural Coatings	—	0.72	—	—	—	—	—	—	—	—	—	—	—	—	—	—	—	—
Onsite truck	0.00	0.00	0.00	0.00	0.00	0.00	0.00	0.00	0.00	0.00	0.00	—	0.00	0.00	0.00	0.00	0.00	0.00
Offsite	—	—	—	—	—	—	—	—	—	—	—	—	—	—	—	—	—	—
Daily, Summer (Max)	—	—	—	—	—	—	—	—	—	—	—	—	—	—	—	—	—	—
Worker	0.04	0.04	0.02	0.42	0.00	0.00	0.09	0.09	0.00	0.02	0.02	—	95.7	95.7	< 0.005	< 0.005	0.38	97.2
Vendor	0.00	0.00	0.00	0.00	0.00	0.00	0.00	0.00	0.00	0.00	0.00	—	0.00	0.00	0.00	0.00	0.00	0.00
Hauling	0.00	0.00	0.00	0.00	0.00	0.00	0.00	0.00	0.00	0.00	0.00	—	0.00	0.00	0.00	0.00	0.00	0.00
Daily, Winter (Max)	—	—	—	—	—	—	—	—	—	—	—	—	—	—	—	—	—	—
Average Daily	—	—	—	—	—	—	—	—	—	—	—	—	—	—	—	—	—	—
Worker	< 0.005	< 0.005	< 0.005	< 0.005	0.00	0.00	< 0.005	< 0.005	0.00	< 0.005	< 0.005	—	1.22	1.22	< 0.005	< 0.005	< 0.005	1.24
Vendor	0.00	0.00	0.00	0.00	0.00	0.00	0.00	0.00	0.00	0.00	0.00	—	0.00	0.00	0.00	0.00	0.00	0.00
Hauling	0.00	0.00	0.00	0.00	0.00	0.00	0.00	0.00	0.00	0.00	0.00	—	0.00	0.00	0.00	0.00	0.00	0.00
Annual	—	—	—	—	—	—	—	—	—	—	—	—	—	—	—	—	—	—
Worker	< 0.005	< 0.005	< 0.005	< 0.005	0.00	0.00	< 0.005	< 0.005	0.00	< 0.005	< 0.005	—	0.20	0.20	< 0.005	< 0.005	< 0.005	0.21
Vendor	0.00	0.00	0.00	0.00	0.00	0.00	0.00	0.00	0.00	0.00	0.00	—	0.00	0.00	0.00	0.00	0.00	0.00
Hauling	0.00	0.00	0.00	0.00	0.00	0.00	0.00	0.00	0.00	0.00	0.00	—	0.00	0.00	0.00	0.00	0.00	0.00

4. Operations Emissions Details

4.1. Mobile Emissions by Land Use

4.1.1. Unmitigated

Criteria Pollutants (lb/day for daily, ton/yr for annual) and GHGs (lb/day for daily, MT/yr for annual)

Land Use	TOG	ROG	NOx	CO	SO2	PM10E	PM10D	PM10T	PM2.5E	PM2.5D	PM2.5T	BCO2	NBCO2	CO2T	CH4	N2O	R	CO2e
Daily, Summer (Max)	—	—	—	—	—	—	—	—	—	—	—	—	—	—	—	—	—	—
Apartments Mid Rise	1.35	1.27	0.85	8.18	0.02	0.01	1.73	1.74	0.01	0.44	0.45	—	1,968	1,968	0.10	0.09	6.85	2,004
General Office Building	0.14	0.13	0.10	0.97	< 0.005	< 0.005	0.22	0.22	< 0.005	0.06	0.06	—	249	249	0.01	0.01	0.88	254
Total	1.49	1.40	0.95	9.15	0.02	0.01	1.95	1.96	0.01	0.49	0.51	—	2,217	2,217	0.11	0.10	7.73	2,258
Daily, Winter (Max)	—	—	—	—	—	—	—	—	—	—	—	—	—	—	—	—	—	—
Apartments Mid Rise	1.31	1.21	0.99	8.20	0.02	0.01	1.73	1.74	0.01	0.44	0.45	—	1,859	1,859	0.11	0.10	0.18	1,892
General Office Building	0.13	0.12	0.12	0.94	< 0.005	< 0.005	0.22	0.22	< 0.005	0.06	0.06	—	235	235	0.01	0.01	0.02	239
Total	1.44	1.34	1.11	9.14	0.02	0.01	1.95	1.96	0.01	0.49	0.51	—	2,094	2,094	0.12	0.11	0.20	2,131
Annual	—	—	—	—	—	—	—	—	—	—	—	—	—	—	—	—	—	—
Apartments Mid Rise	0.22	0.21	0.16	1.35	< 0.005	< 0.005	0.30	0.30	< 0.005	0.08	0.08	—	294	294	0.02	0.02	0.47	299
General Office Building	0.02	0.02	0.02	0.12	< 0.005	< 0.005	0.03	0.03	< 0.005	0.01	0.01	—	29.6	29.6	< 0.005	< 0.005	0.05	30.2
Total	0.24	0.22	0.18	1.47	< 0.005	< 0.005	0.33	0.33	< 0.005	0.08	0.09	—	324	324	0.02	0.02	0.51	330

4.2. Energy

4.2.1. Electricity Emissions By Land Use - Unmitigated

Criteria Pollutants (lb/day for daily, ton/yr for annual) and GHGs (lb/day for daily, MT/yr for annual)

Land Use	TOG	ROG	NOx	CO	SO2	PM10E	PM10D	PM10T	PM2.5E	PM2.5D	PM2.5T	BCO2	NBCO2	CO2T	CH4	N2O	R	CO2e
Daily, Summer (Max)	—	—	—	—	—	—	—	—	—	—	—	—	—	—	—	—	—	—
Apartments Mid Rise	—	—	—	—	—	—	—	—	—	—	—	—	143	143	0.02	< 0.005	—	144
General Office Building	—	—	—	—	—	—	—	—	—	—	—	—	47.3	47.3	0.01	< 0.005	—	47.8
Total	—	—	—	—	—	—	—	—	—	—	—	—	190	190	0.03	< 0.005	—	192
Daily, Winter (Max)	—	—	—	—	—	—	—	—	—	—	—	—	—	—	—	—	—	—
Apartments Mid Rise	—	—	—	—	—	—	—	—	—	—	—	—	143	143	0.02	< 0.005	—	144
General Office Building	—	—	—	—	—	—	—	—	—	—	—	—	47.3	47.3	0.01	< 0.005	—	47.8
Total	—	—	—	—	—	—	—	—	—	—	—	—	190	190	0.03	< 0.005	—	192
Annual	—	—	—	—	—	—	—	—	—	—	—	—	—	—	—	—	—	—
Apartments Mid Rise	—	—	—	—	—	—	—	—	—	—	—	—	23.7	23.7	< 0.005	< 0.005	—	23.9
General Office Building	—	—	—	—	—	—	—	—	—	—	—	—	7.83	7.83	< 0.005	< 0.005	—	7.91
Total	—	—	—	—	—	—	—	—	—	—	—	—	31.5	31.5	0.01	< 0.005	—	31.8

4.2.3. Natural Gas Emissions By Land Use - Unmitigated

Criteria Pollutants (lb/day for daily, ton/yr for annual) and GHGs (lb/day for daily, MT/yr for annual)

Land Use	TOG	ROG	NOx	CO	SO2	PM10E	PM10D	PM10T	PM2.5E	PM2.5D	PM2.5T	BCO2	NBCO2	CO2T	CH4	N2O	R	CO2e
Daily, Summer (Max)	—	—	—	—	—	—	—	—	—	—	—	—	—	—	—	—	—	—
Apartments Mid Rise	0.02	0.01	0.17	0.07	< 0.005	0.01	—	0.01	0.01	—	0.01	—	212	212	0.02	< 0.005	—	212
General Office Building	< 0.005	< 0.005	0.03	0.02	< 0.005	< 0.005	—	< 0.005	< 0.005	—	< 0.005	—	30.4	30.4	< 0.005	< 0.005	—	30.5
Total	0.02	0.01	0.19	0.09	< 0.005	0.02	—	0.02	0.02	—	0.02	—	242	242	0.02	< 0.005	—	243
Daily, Winter (Max)	—	—	—	—	—	—	—	—	—	—	—	—	—	—	—	—	—	—
Apartments Mid Rise	0.02	0.01	0.17	0.07	< 0.005	0.01	—	0.01	0.01	—	0.01	—	212	212	0.02	< 0.005	—	212
General Office Building	< 0.005	< 0.005	0.03	0.02	< 0.005	< 0.005	—	< 0.005	< 0.005	—	< 0.005	—	30.4	30.4	< 0.005	< 0.005	—	30.5
Total	0.02	0.01	0.19	0.09	< 0.005	0.02	—	0.02	0.02	—	0.02	—	242	242	0.02	< 0.005	—	243
Annual	—	—	—	—	—	—	—	—	—	—	—	—	—	—	—	—	—	—
Apartments Mid Rise	< 0.005	< 0.005	0.03	0.01	< 0.005	< 0.005	—	< 0.005	< 0.005	—	< 0.005	—	35.0	35.0	< 0.005	< 0.005	—	35.1
General Office Building	< 0.005	< 0.005	< 0.005	< 0.005	< 0.005	< 0.005	—	< 0.005	< 0.005	—	< 0.005	—	5.04	5.04	< 0.005	< 0.005	—	5.05
Total	< 0.005	< 0.005	0.04	0.02	< 0.005	< 0.005	—	< 0.005	< 0.005	—	< 0.005	—	40.1	40.1	< 0.005	< 0.005	—	40.2

4.3. Area Emissions by Source

4.3.1. Unmitigated

Criteria Pollutants (lb/day for daily, ton/yr for annual) and GHGs (lb/day for daily, MT/yr for annual)

Source	TOG	ROG	NOx	CO	SO2	PM10E	PM10D	PM10T	PM2.5E	PM2.5D	PM2.5T	BCO2	NBCO2	CO2T	CH4	N2O	R	CO2e
Daily, Summer (Max)	—	—	—	—	—	—	—	—	—	—	—	—	—	—	—	—	—	—
Hearths	0.09	0.04	0.74	0.31	< 0.005	0.06	—	0.06	0.06	—	0.06	0.00	940	940	0.02	< 0.005	—	941
Consumer Products	—	2.22	—	—	—	—	—	—	—	—	—	—	—	—	—	—	—	—
Architectural Coatings	—	0.40	—	—	—	—	—	—	—	—	—	—	—	—	—	—	—	—
Landscape Equipment	0.43	0.41	0.04	4.43	< 0.005	< 0.005	—	< 0.005	< 0.005	—	< 0.005	—	12.1	12.1	< 0.005	< 0.005	—	12.1
Total	0.52	3.06	0.78	4.74	< 0.005	0.06	—	0.06	0.06	—	0.06	0.00	952	952	0.02	< 0.005	—	953
Daily, Winter (Max)	—	—	—	—	—	—	—	—	—	—	—	—	—	—	—	—	—	—
Hearths	0.09	0.04	0.74	0.31	< 0.005	0.06	—	0.06	0.06	—	0.06	0.00	940	940	0.02	< 0.005	—	941
Consumer Products	—	2.22	—	—	—	—	—	—	—	—	—	—	—	—	—	—	—	—
Architectural Coatings	—	0.40	—	—	—	—	—	—	—	—	—	—	—	—	—	—	—	—
Total	0.09	2.65	0.74	0.31	< 0.005	0.06	—	0.06	0.06	—	0.06	0.00	940	940	0.02	< 0.005	—	941
Annual	—	—	—	—	—	—	—	—	—	—	—	—	—	—	—	—	—	—
Hearths	< 0.005	< 0.005	< 0.005	< 0.005	< 0.005	< 0.005	—	< 0.005	< 0.005	—	< 0.005	0.00	3.84	3.84	< 0.005	< 0.005	—	3.84

Consum Products	—	0.40	—	—	—	—	—	—	—	—	—	—	—	—	—	—	—	—
Architectural Coatings	—	0.07	—	—	—	—	—	—	—	—	—	—	—	—	—	—	—	—
Landscape Equipment	0.04	0.04	< 0.005	0.40	< 0.005	< 0.005	—	< 0.005	< 0.005	—	< 0.005	—	0.99	0.99	< 0.005	< 0.005	—	0.99
Total	0.04	0.51	0.01	0.40	< 0.005	< 0.005	—	< 0.005	< 0.005	—	< 0.005	0.00	4.82	4.82	< 0.005	< 0.005	—	4.83

4.4. Water Emissions by Land Use

4.4.1. Unmitigated

Criteria Pollutants (lb/day for daily, ton/yr for annual) and GHGs (lb/day for daily, MT/yr for annual)

Land Use	TOG	ROG	NOx	CO	SO2	PM10E	PM10D	PM10T	PM2.5E	PM2.5D	PM2.5T	BCO2	NBCO2	CO2T	CH4	N2O	R	CO2e
Daily, Summer (Max)	—	—	—	—	—	—	—	—	—	—	—	—	—	—	—	—	—	—
Apartments Mid Rise	—	—	—	—	—	—	—	—	—	—	—	5.10	9.81	14.9	0.52	0.01	—	31.8
General Office Building	—	—	—	—	—	—	—	—	—	—	—	1.36	2.57	3.94	0.14	< 0.005	—	8.44
Total	—	—	—	—	—	—	—	—	—	—	—	6.47	12.4	18.8	0.67	0.02	—	40.2
Daily, Winter (Max)	—	—	—	—	—	—	—	—	—	—	—	—	—	—	—	—	—	—
Apartments Mid Rise	—	—	—	—	—	—	—	—	—	—	—	5.10	9.81	14.9	0.52	0.01	—	31.8

General Office Building	—	—	—	—	—	—	—	—	—	—	—	1.36	2.57	3.94	0.14	< 0.005	—	8.44
Total	—	—	—	—	—	—	—	—	—	—	—	6.47	12.4	18.8	0.67	0.02	—	40.2
Annual	—	—	—	—	—	—	—	—	—	—	—	—	—	—	—	—	—	—
Apartments Mid Rise	—	—	—	—	—	—	—	—	—	—	—	0.84	1.62	2.47	0.09	< 0.005	—	5.26
General Office Building	—	—	—	—	—	—	—	—	—	—	—	0.23	0.43	0.65	0.02	< 0.005	—	1.40
Total	—	—	—	—	—	—	—	—	—	—	—	1.07	2.05	3.12	0.11	< 0.005	—	6.66

4.5. Waste Emissions by Land Use

4.5.1. Unmitigated

Criteria Pollutants (lb/day for daily, ton/yr for annual) and GHGs (lb/day for daily, MT/yr for annual)

Land Use	TOG	ROG	NOx	CO	SO2	PM10E	PM10D	PM10T	PM2.5E	PM2.5D	PM2.5T	BCO2	NBCO2	CO2T	CH4	N2O	R	CO2e
Daily, Summer (Max)	—	—	—	—	—	—	—	—	—	—	—	—	—	—	—	—	—	—
Apartments Mid Rise	—	—	—	—	—	—	—	—	—	—	—	29.8	0.00	29.8	2.98	0.00	—	104
General Office Building	—	—	—	—	—	—	—	—	—	—	—	2.00	0.00	2.00	0.20	0.00	—	7.01
Total	—	—	—	—	—	—	—	—	—	—	—	31.8	0.00	31.8	3.18	0.00	—	111
Daily, Winter (Max)	—	—	—	—	—	—	—	—	—	—	—	—	—	—	—	—	—	—

Apartments	—	—	—	—	—	—	—	—	—	—	—	29.8	0.00	29.8	2.98	0.00	—	104
General Office Building	—	—	—	—	—	—	—	—	—	—	—	2.00	0.00	2.00	0.20	0.00	—	7.01
Total	—	—	—	—	—	—	—	—	—	—	—	31.8	0.00	31.8	3.18	0.00	—	111
Annual	—	—	—	—	—	—	—	—	—	—	—	—	—	—	—	—	—	—
Apartments Mid Rise	—	—	—	—	—	—	—	—	—	—	—	4.94	0.00	4.94	0.49	0.00	—	17.3
General Office Building	—	—	—	—	—	—	—	—	—	—	—	0.33	0.00	0.33	0.03	0.00	—	1.16
Total	—	—	—	—	—	—	—	—	—	—	—	5.27	0.00	5.27	0.53	0.00	—	18.4

4.6. Refrigerant Emissions by Land Use

4.6.1. Unmitigated

Criteria Pollutants (lb/day for daily, ton/yr for annual) and GHGs (lb/day for daily, MT/yr for annual)

Land Use	TOG	ROG	NOx	CO	SO2	PM10E	PM10D	PM10T	PM2.5E	PM2.5D	PM2.5T	BCO2	NBCO2	CO2T	CH4	N2O	R	CO2e
Daily, Summer (Max)	—	—	—	—	—	—	—	—	—	—	—	—	—	—	—	—	—	—
Apartments Mid Rise	—	—	—	—	—	—	—	—	—	—	—	—	—	—	—	—	0.71	0.71
General Office Building	—	—	—	—	—	—	—	—	—	—	—	—	—	—	—	—	0.01	0.01
Total	—	—	—	—	—	—	—	—	—	—	—	—	—	—	—	—	0.72	0.72

Daily, Winter (Max)	—	—	—	—	—	—	—	—	—	—	—	—	—	—	—	—	—	—
Apartments Mid Rise	—	—	—	—	—	—	—	—	—	—	—	—	—	—	—	—	0.71	0.71
General Office Building	—	—	—	—	—	—	—	—	—	—	—	—	—	—	—	—	0.01	0.01
Total	—	—	—	—	—	—	—	—	—	—	—	—	—	—	—	—	0.72	0.72
Annual	—	—	—	—	—	—	—	—	—	—	—	—	—	—	—	—	—	—
Apartments Mid Rise	—	—	—	—	—	—	—	—	—	—	—	—	—	—	—	—	0.12	0.12
General Office Building	—	—	—	—	—	—	—	—	—	—	—	—	—	—	—	—	< 0.005	< 0.005
Total	—	—	—	—	—	—	—	—	—	—	—	—	—	—	—	—	0.12	0.12

4.7. Offroad Emissions By Equipment Type

4.7.1. Unmitigated

Criteria Pollutants (lb/day for daily, ton/yr for annual) and GHGs (lb/day for daily, MT/yr for annual)

Equipment Type	TOG	ROG	NOx	CO	SO2	PM10E	PM10D	PM10T	PM2.5E	PM2.5D	PM2.5T	BCO2	NBCO2	CO2T	CH4	N2O	R	CO2e
Daily, Summer (Max)	—	—	—	—	—	—	—	—	—	—	—	—	—	—	—	—	—	—
Total	—	—	—	—	—	—	—	—	—	—	—	—	—	—	—	—	—	—
Daily, Winter (Max)	—	—	—	—	—	—	—	—	—	—	—	—	—	—	—	—	—	—

Total	—	—	—	—	—	—	—	—	—	—	—	—	—	—	—	—	—	—
Annual	—	—	—	—	—	—	—	—	—	—	—	—	—	—	—	—	—	—
Total	—	—	—	—	—	—	—	—	—	—	—	—	—	—	—	—	—	—

4.8. Stationary Emissions By Equipment Type

4.8.1. Unmitigated

Criteria Pollutants (lb/day for daily, ton/yr for annual) and GHGs (lb/day for daily, MT/yr for annual)

Equipment Type	TOG	ROG	NOx	CO	SO2	PM10E	PM10D	PM10T	PM2.5E	PM2.5D	PM2.5T	BCO2	NBCO2	CO2T	CH4	N2O	R	CO2e
Daily, Summer (Max)	—	—	—	—	—	—	—	—	—	—	—	—	—	—	—	—	—	—
Total	—	—	—	—	—	—	—	—	—	—	—	—	—	—	—	—	—	—
Daily, Winter (Max)	—	—	—	—	—	—	—	—	—	—	—	—	—	—	—	—	—	—
Total	—	—	—	—	—	—	—	—	—	—	—	—	—	—	—	—	—	—
Annual	—	—	—	—	—	—	—	—	—	—	—	—	—	—	—	—	—	—
Total	—	—	—	—	—	—	—	—	—	—	—	—	—	—	—	—	—	—

4.9. User Defined Emissions By Equipment Type

4.9.1. Unmitigated

Criteria Pollutants (lb/day for daily, ton/yr for annual) and GHGs (lb/day for daily, MT/yr for annual)

Equipment Type	TOG	ROG	NOx	CO	SO2	PM10E	PM10D	PM10T	PM2.5E	PM2.5D	PM2.5T	BCO2	NBCO2	CO2T	CH4	N2O	R	CO2e

Daily, Summer (Max)	—	—	—	—	—	—	—	—	—	—	—	—	—	—	—	—	—	—
Total	—	—	—	—	—	—	—	—	—	—	—	—	—	—	—	—	—	—
Daily, Winter (Max)	—	—	—	—	—	—	—	—	—	—	—	—	—	—	—	—	—	—
Total	—	—	—	—	—	—	—	—	—	—	—	—	—	—	—	—	—	—
Annual	—	—	—	—	—	—	—	—	—	—	—	—	—	—	—	—	—	—
Total	—	—	—	—	—	—	—	—	—	—	—	—	—	—	—	—	—	—

4.10. Soil Carbon Accumulation By Vegetation Type

4.10.1. Soil Carbon Accumulation By Vegetation Type - Unmitigated

Criteria Pollutants (lb/day for daily, ton/yr for annual) and GHGs (lb/day for daily, MT/yr for annual)

Vegetation	TOG	ROG	NOx	CO	SO2	PM10E	PM10D	PM10T	PM2.5E	PM2.5D	PM2.5T	BCO2	NBCO2	CO2T	CH4	N2O	R	CO2e
Daily, Summer (Max)	—	—	—	—	—	—	—	—	—	—	—	—	—	—	—	—	—	—
Total	—	—	—	—	—	—	—	—	—	—	—	—	—	—	—	—	—	—
Daily, Winter (Max)	—	—	—	—	—	—	—	—	—	—	—	—	—	—	—	—	—	—
Total	—	—	—	—	—	—	—	—	—	—	—	—	—	—	—	—	—	—
Annual	—	—	—	—	—	—	—	—	—	—	—	—	—	—	—	—	—	—
Total	—	—	—	—	—	—	—	—	—	—	—	—	—	—	—	—	—	—

4.10.2. Above and Belowground Carbon Accumulation by Land Use Type - Unmitigated

Criteria Pollutants (lb/day for daily, ton/yr for annual) and GHGs (lb/day for daily, MT/yr for annual)

Land Use	TOG	ROG	NOx	CO	SO2	PM10E	PM10D	PM10T	PM2.5E	PM2.5D	PM2.5T	BCO2	NBCO2	CO2T	CH4	N2O	R	CO2e
Daily, Summer (Max)	—	—	—	—	—	—	—	—	—	—	—	—	—	—	—	—	—	—
Total	—	—	—	—	—	—	—	—	—	—	—	—	—	—	—	—	—	—
Daily, Winter (Max)	—	—	—	—	—	—	—	—	—	—	—	—	—	—	—	—	—	—
Total	—	—	—	—	—	—	—	—	—	—	—	—	—	—	—	—	—	—
Annual	—	—	—	—	—	—	—	—	—	—	—	—	—	—	—	—	—	—
Total	—	—	—	—	—	—	—	—	—	—	—	—	—	—	—	—	—	—

4.10.3. Avoided and Sequestered Emissions by Species - Unmitigated

Criteria Pollutants (lb/day for daily, ton/yr for annual) and GHGs (lb/day for daily, MT/yr for annual)

Species	TOG	ROG	NOx	CO	SO2	PM10E	PM10D	PM10T	PM2.5E	PM2.5D	PM2.5T	BCO2	NBCO2	CO2T	CH4	N2O	R	CO2e
Daily, Summer (Max)	—	—	—	—	—	—	—	—	—	—	—	—	—	—	—	—	—	—
Avoided	—	—	—	—	—	—	—	—	—	—	—	—	—	—	—	—	—	—
Subtotal	—	—	—	—	—	—	—	—	—	—	—	—	—	—	—	—	—	—
Sequestered	—	—	—	—	—	—	—	—	—	—	—	—	—	—	—	—	—	—
Subtotal	—	—	—	—	—	—	—	—	—	—	—	—	—	—	—	—	—	—
Removed	—	—	—	—	—	—	—	—	—	—	—	—	—	—	—	—	—	—
Subtotal	—	—	—	—	—	—	—	—	—	—	—	—	—	—	—	—	—	—
—	—	—	—	—	—	—	—	—	—	—	—	—	—	—	—	—	—	—
Daily, Winter (Max)	—	—	—	—	—	—	—	—	—	—	—	—	—	—	—	—	—	—

Avoided	—	—	—	—	—	—	—	—	—	—	—	—	—	—	—	—	—	—
Subtotal	—	—	—	—	—	—	—	—	—	—	—	—	—	—	—	—	—	—
Sequestered	—	—	—	—	—	—	—	—	—	—	—	—	—	—	—	—	—	—
Subtotal	—	—	—	—	—	—	—	—	—	—	—	—	—	—	—	—	—	—
Removed	—	—	—	—	—	—	—	—	—	—	—	—	—	—	—	—	—	—
Subtotal	—	—	—	—	—	—	—	—	—	—	—	—	—	—	—	—	—	—
—	—	—	—	—	—	—	—	—	—	—	—	—	—	—	—	—	—	—
Annual	—	—	—	—	—	—	—	—	—	—	—	—	—	—	—	—	—	—
Avoided	—	—	—	—	—	—	—	—	—	—	—	—	—	—	—	—	—	—
Subtotal	—	—	—	—	—	—	—	—	—	—	—	—	—	—	—	—	—	—
Sequestered	—	—	—	—	—	—	—	—	—	—	—	—	—	—	—	—	—	—
Subtotal	—	—	—	—	—	—	—	—	—	—	—	—	—	—	—	—	—	—
Removed	—	—	—	—	—	—	—	—	—	—	—	—	—	—	—	—	—	—
Subtotal	—	—	—	—	—	—	—	—	—	—	—	—	—	—	—	—	—	—
—	—	—	—	—	—	—	—	—	—	—	—	—	—	—	—	—	—	—

5. Activity Data

5.1. Construction Schedule

Phase Name	Phase Type	Start Date	End Date	Days Per Week	Work Days per Phase	Phase Description
Demolition	Demolition	1/2/2025	1/16/2025	5.00	10.0	—
Site Preparation	Site Preparation	1/17/2025	1/18/2025	5.00	1.00	—
Grading	Grading	1/19/2025	1/21/2025	5.00	2.00	—
Building Construction	Building Construction	1/22/2025	6/11/2025	5.00	100	—

Paving	Paving	6/12/2025	6/19/2025	5.00	5.00	—
Architectural Coating	Architectural Coating	6/20/2025	6/27/2025	5.00	5.00	—

5.2. Off-Road Equipment

5.2.1. Unmitigated

Phase Name	Equipment Type	Fuel Type	Engine Tier	Number per Day	Hours Per Day	Horsepower	Load Factor
Demolition	Tractors/Loaders/Backhoes	Diesel	Average	2.00	6.00	84.0	0.37
Demolition	Rubber Tired Dozers	Diesel	Average	1.00	1.00	367	0.40
Demolition	Concrete/Industrial Saws	Diesel	Average	1.00	8.00	33.0	0.73
Site Preparation	Graders	Diesel	Average	1.00	8.00	148	0.41
Site Preparation	Tractors/Loaders/Backhoes	Diesel	Average	1.00	8.00	84.0	0.37
Grading	Graders	Diesel	Average	1.00	6.00	148	0.41
Grading	Rubber Tired Dozers	Diesel	Average	1.00	6.00	367	0.40
Grading	Tractors/Loaders/Backhoes	Diesel	Average	1.00	7.00	84.0	0.37
Building Construction	Cranes	Diesel	Average	1.00	4.00	367	0.29
Building Construction	Forklifts	Diesel	Average	2.00	6.00	82.0	0.20
Building Construction	Tractors/Loaders/Backhoes	Diesel	Average	2.00	8.00	84.0	0.37
Paving	Tractors/Loaders/Backhoes	Diesel	Average	1.00	7.00	84.0	0.37
Paving	Cement and Mortar Mixers	Diesel	Average	4.00	6.00	10.0	0.56
Paving	Pavers	Diesel	Average	1.00	7.00	81.0	0.42
Paving	Rollers	Diesel	Average	1.00	7.00	36.0	0.38
Architectural Coating	Air Compressors	Diesel	Average	1.00	6.00	37.0	0.48

5.3. Construction Vehicles

5.3.1. Unmitigated

Phase Name	Trip Type	One-Way Trips per Day	Miles per Trip	Vehicle Mix
Demolition	—	—	—	—
Demolition	Worker	10.0	11.7	LDA,LDT1,LDT2
Demolition	Vendor	—	8.40	HHDT,MHDT
Demolition	Hauling	26.0	20.0	HHDT
Demolition	Onsite truck	—	—	HHDT
Site Preparation	—	—	—	—
Site Preparation	Worker	5.00	11.7	LDA,LDT1,LDT2
Site Preparation	Vendor	—	8.40	HHDT,MHDT
Site Preparation	Hauling	0.00	20.0	HHDT
Site Preparation	Onsite truck	—	—	HHDT
Grading	—	—	—	—
Grading	Worker	7.50	11.7	LDA,LDT1,LDT2
Grading	Vendor	—	8.40	HHDT,MHDT
Grading	Hauling	0.00	20.0	HHDT
Grading	Onsite truck	—	—	HHDT
Building Construction	—	—	—	—
Building Construction	Worker	55.3	11.7	LDA,LDT1,LDT2
Building Construction	Vendor	8.67	8.40	HHDT,MHDT
Building Construction	Hauling	0.00	20.0	HHDT
Building Construction	Onsite truck	—	—	HHDT
Paving	—	—	—	—
Paving	Worker	17.5	11.7	LDA,LDT1,LDT2
Paving	Vendor	—	8.40	HHDT,MHDT

Paving	Hauling	0.00	20.0	HHDT
Paving	Onsite truck	—	—	HHDT
Architectural Coating	—	—	—	—
Architectural Coating	Worker	11.1	11.7	LDA,LDT1,LDT2
Architectural Coating	Vendor	—	8.40	HHDT,MHDT
Architectural Coating	Hauling	0.00	20.0	HHDT
Architectural Coating	Onsite truck	—	—	HHDT

5.4. Vehicles

5.4.1. Construction Vehicle Control Strategies

Non-applicable. No control strategies activated by user.

5.5. Architectural Coatings

Phase Name	Residential Interior Area Coated (sq ft)	Residential Exterior Area Coated (sq ft)	Non-Residential Interior Area Coated (sq ft)	Non-Residential Exterior Area Coated (sq ft)	Parking Area Coated (sq ft)
Architectural Coating	201,546	67,182	6,000	2,000	—

5.6. Dust Mitigation

5.6.1. Construction Earthmoving Activities

Phase Name	Material Imported (cy)	Material Exported (cy)	Acres Graded (acres)	Material Demolished (Building Square Footage)	Acres Paved (acres)
Demolition	0.00	0.00	0.00	22,592	—
Site Preparation	—	—	0.50	0.00	—
Grading	—	—	1.50	0.00	—
Paving	0.00	0.00	0.00	0.00	0.00

5.6.2. Construction Earthmoving Control Strategies

Non-applicable. No control strategies activated by user.

5.7. Construction Paving

Land Use	Area Paved (acres)	% Asphalt
Apartments Mid Rise	—	0%
General Office Building	0.00	0%

5.8. Construction Electricity Consumption and Emissions Factors

kWh per Year and Emission Factor (lb/MWh)

Year	kWh per Year	CO2	CH4	N2O
2025	0.00	204	0.03	< 0.005

5.9. Operational Mobile Sources

5.9.1. Unmitigated

Land Use Type	Trips/Weekday	Trips/Saturday	Trips/Sunday	Trips/Year	VMT/Weekday	VMT/Saturday	VMT/Sunday	VMT/Year
Apartments Mid Rise	408	368	307	141,568	2,449	2,211	1,842	849,908
General Office Building	39.0	8.84	2.80	10,764	313	71.1	22.5	86,577

5.10. Operational Area Sources

5.10.1. Hearths

5.10.1.1. Unmitigated

Hearth Type	Unmitigated (number)
Apartments Mid Rise	—

Wood Fireplaces	0
Gas Fireplaces	38
Propane Fireplaces	0
Electric Fireplaces	0
No Fireplaces	37
Conventional Wood Stoves	0
Catalytic Wood Stoves	0
Non-Catalytic Wood Stoves	0
Pellet Wood Stoves	0

5.10.2. Architectural Coatings

Residential Interior Area Coated (sq ft)	Residential Exterior Area Coated (sq ft)	Non-Residential Interior Area Coated (sq ft)	Non-Residential Exterior Area Coated (sq ft)	Parking Area Coated (sq ft)
201546.22499999998	67,182	6,000	2,000	—

5.10.3. Landscape Equipment

Season	Unit	Value
Snow Days	day/yr	0.00
Summer Days	day/yr	180

5.11. Operational Energy Consumption

5.11.1. Unmitigated

Electricity (kWh/yr) and CO2 and CH4 and N2O and Natural Gas (kBTU/yr)

Land Use	Electricity (kWh/yr)	CO2	CH4	N2O	Natural Gas (kBTU/yr)
Apartments Mid Rise	255,859	204	0.0330	0.0040	660,305
General Office Building	84,675	204	0.0330	0.0040	95,001

5.12. Operational Water and Wastewater Consumption

5.12.1. Unmitigated

Land Use	Indoor Water (gal/year)	Outdoor Water (gal/year)
Apartments Mid Rise	2,663,314	62,529
General Office Building	710,935	0.00

5.13. Operational Waste Generation

5.13.1. Unmitigated

Land Use	Waste (ton/year)	Cogeneration (kWh/year)
Apartments Mid Rise	55.3	—
General Office Building	3.72	—

5.14. Operational Refrigeration and Air Conditioning Equipment

5.14.1. Unmitigated

Land Use Type	Equipment Type	Refrigerant	GWP	Quantity (kg)	Operations Leak Rate	Service Leak Rate	Times Serviced
Apartments Mid Rise	Average room A/C & Other residential A/C and heat pumps	R-410A	2,088	< 0.005	2.50	2.50	10.0
Apartments Mid Rise	Household refrigerators and/or freezers	R-134a	1,430	0.12	0.60	0.00	1.00
General Office Building	Household refrigerators and/or freezers	R-134a	1,430	0.02	0.60	0.00	1.00
General Office Building	Other commercial A/C and heat pumps	R-410A	2,088	< 0.005	4.00	4.00	18.0

5.15. Operational Off-Road Equipment

5.15.1. Unmitigated

Equipment Type	Fuel Type	Engine Tier	Number per Day	Hours Per Day	Horsepower	Load Factor

5.16. Stationary Sources

5.16.1. Emergency Generators and Fire Pumps

Equipment Type	Fuel Type	Number per Day	Hours per Day	Hours per Year	Horsepower	Load Factor

5.16.2. Process Boilers

Equipment Type	Fuel Type	Number	Boiler Rating (MMBtu/hr)	Daily Heat Input (MMBtu/day)	Annual Heat Input (MMBtu/yr)

5.17. User Defined

Equipment Type	Fuel Type

5.18. Vegetation

5.18.1. Land Use Change

5.18.1.1. Unmitigated

Vegetation Land Use Type	Vegetation Soil Type	Initial Acres	Final Acres

5.18.1. Biomass Cover Type

5.18.1.1. Unmitigated

Biomass Cover Type	Initial Acres	Final Acres

5.18.2. Sequestration

5.18.2.1. Unmitigated

Tree Type	Number	Electricity Saved (kWh/year)	Natural Gas Saved (btu/year)

6. Climate Risk Detailed Report

6.1. Climate Risk Summary

Cal-Adapt midcentury 2040–2059 average projections for four hazards are reported below for your project location. These are under Representation Concentration Pathway (RCP) 8.5 which assumes GHG emissions will continue to rise strongly through 2050 and then plateau around 2100.

Climate Hazard	Result for Project Location	Unit
Temperature and Extreme Heat	7.75	annual days of extreme heat
Extreme Precipitation	7.20	annual days with precipitation above 20 mm
Sea Level Rise	—	meters of inundation depth
Wildfire	8.96	annual hectares burned

Temperature and Extreme Heat data are for grid cell in which your project are located. The projection is based on the 98th historical percentile of daily maximum/minimum temperatures from observed historical data (32 climate model ensemble from Cal-Adapt, 2040–2059 average under RCP 8.5). Each grid cell is 6 kilometers (km) by 6 km, or 3.7 miles (mi) by 3.7 mi.
Extreme Precipitation data are for the grid cell in which your project are located. The threshold of 20 mm is equivalent to about ¾ an inch of rain, which would be light to moderate rainfall if received over a full day or heavy rain if received over a period of 2 to 4 hours. Each grid cell is 6 kilometers (km) by 6 km, or 3.7 miles (mi) by 3.7 mi.
Sea Level Rise data are for the grid cell in which your project are located. The projections are from Radke et al. (2017), as reported in Cal-Adapt (Radke et al., 2017, CEC-500-2017-008), and consider inundation location and depth for the San Francisco Bay, the Sacramento-San Joaquin River Delta and California coast resulting different increments of sea level rise coupled with extreme storm events. Users may select from four scenarios to view the range in potential inundation depth for the grid cell. The four scenarios are: No rise, 0.5 meter, 1.0 meter, 1.41 meters
Wildfire data are for the grid cell in which your project are located. The projections are from UC Davis, as reported in Cal-Adapt (2040–2059 average under RCP 8.5), and consider historical data of climate, vegetation, population density, and large (> 400 ha) fire history. Users may select from four model simulations to view the range in potential wildfire probabilities for the grid cell. The four simulations make different assumptions about expected rainfall and temperature are: Warmer/drier (HadGEM2-ES), Cooler/wetter (CNRM-CM5), Average conditions (CanESM2), Range of different rainfall and temperature possibilities (MIROC5). Each grid cell is 6 kilometers (km) by 6 km, or 3.7 miles (mi) by 3.7 mi.

6.2. Initial Climate Risk Scores

Climate Hazard	Exposure Score	Sensitivity Score	Adaptive Capacity Score	Vulnerability Score

Temperature and Extreme Heat	N/A	N/A	N/A	N/A
Extreme Precipitation	2	0	0	N/A
Sea Level Rise	1	0	0	N/A
Wildfire	1	0	0	N/A
Flooding	N/A	N/A	N/A	N/A
Drought	N/A	N/A	N/A	N/A
Snowpack Reduction	N/A	N/A	N/A	N/A
Air Quality Degradation	0	0	0	N/A

The sensitivity score reflects the extent to which a project would be adversely affected by exposure to a climate hazard. Exposure is rated on a scale of 1 to 5, with a score of 5 representing the greatest exposure.
The adaptive capacity of a project refers to its ability to manage and reduce vulnerabilities from projected climate hazards. Adaptive capacity is rated on a scale of 1 to 5, with a score of 5 representing the greatest ability to adapt.
The overall vulnerability scores are calculated based on the potential impacts and adaptive capacity assessments for each hazard. Scores do not include implementation of climate risk reduction measures.

6.3. Adjusted Climate Risk Scores

Climate Hazard	Exposure Score	Sensitivity Score	Adaptive Capacity Score	Vulnerability Score
Temperature and Extreme Heat	N/A	N/A	N/A	N/A
Extreme Precipitation	2	1	1	3
Sea Level Rise	1	1	1	2
Wildfire	1	1	1	2
Flooding	N/A	N/A	N/A	N/A
Drought	N/A	N/A	N/A	N/A
Snowpack Reduction	N/A	N/A	N/A	N/A
Air Quality Degradation	1	1	1	2

The sensitivity score reflects the extent to which a project would be adversely affected by exposure to a climate hazard. Exposure is rated on a scale of 1 to 5, with a score of 5 representing the greatest exposure.
The adaptive capacity of a project refers to its ability to manage and reduce vulnerabilities from projected climate hazards. Adaptive capacity is rated on a scale of 1 to 5, with a score of 5 representing the greatest ability to adapt.
The overall vulnerability scores are calculated based on the potential impacts and adaptive capacity assessments for each hazard. Scores include implementation of climate risk reduction measures.

6.4. Climate Risk Reduction Measures

7. Health and Equity Details

7.1. CalEnviroScreen 4.0 Scores

The maximum CalEnviroScreen score is 100. A high score (i.e., greater than 50) reflects a higher pollution burden compared to other census tracts in the state.

Indicator	Result for Project Census Tract
Exposure Indicators	—
AQ-Ozone	3.12
AQ-PM	41.3
AQ-DPM	81.2
Drinking Water	4.21
Lead Risk Housing	95.9
Pesticides	0.00
Toxic Releases	48.4
Traffic	30.0
Effect Indicators	—
CleanUp Sites	70.6
Groundwater	95.4
Haz Waste Facilities/Generators	23.7
Impaired Water Bodies	87.0
Solid Waste	2.52
Sensitive Population	—
Asthma	97.2
Cardio-vascular	61.9
Low Birth Weights	47.1
Socioeconomic Factor Indicators	—

Education	84.0
Housing	90.0
Linguistic	96.9
Poverty	87.5
Unemployment	52.5

7.2. Healthy Places Index Scores

The maximum Health Places Index score is 100. A high score (i.e., greater than 50) reflects healthier community conditions compared to other census tracts in the state.

Indicator	Result for Project Census Tract
Economic	—
Above Poverty	6.262030027
Employed	35.14692673
Median HI	8.661619402
Education	—
Bachelor's or higher	33.13229822
High school enrollment	3.605800077
Preschool enrollment	23.98306172
Transportation	—
Auto Access	2.489413576
Active commuting	96.98447325
Social	—
2-parent households	13.6147825
Voting	34.377005
Neighborhood	—
Alcohol availability	16.73296548
Park access	81.35506224
Retail density	58.73219556

Supermarket access	94.25125112
Tree canopy	42.7691518
Housing	—
Homeownership	4.889002951
Housing habitability	22.52021045
Low-inc homeowner severe housing cost burden	99.12742205
Low-inc renter severe housing cost burden	20.73655845
Uncrowded housing	7.635057103
Health Outcomes	—
Insured adults	3.695624278
Arthritis	36.0
Asthma ER Admissions	5.3
High Blood Pressure	36.7
Cancer (excluding skin)	85.3
Asthma	10.9
Coronary Heart Disease	21.3
Chronic Obstructive Pulmonary Disease	11.3
Diagnosed Diabetes	8.5
Life Expectancy at Birth	11.8
Cognitively Disabled	64.4
Physically Disabled	45.1
Heart Attack ER Admissions	37.4
Mental Health Not Good	8.5
Chronic Kidney Disease	10.6
Obesity	12.7
Pedestrian Injuries	75.4
Physical Health Not Good	7.3

Stroke	10.1
Health Risk Behaviors	—
Binge Drinking	87.8
Current Smoker	8.2
No Leisure Time for Physical Activity	5.4
Climate Change Exposures	—
Wildfire Risk	0.0
SLR Inundation Area	0.0
Children	27.6
Elderly	79.3
English Speaking	1.3
Foreign-born	90.7
Outdoor Workers	4.8
Climate Change Adaptive Capacity	—
Impervious Surface Cover	10.5
Traffic Density	21.7
Traffic Access	87.4
Other Indices	—
Hardship	91.8
Other Decision Support	—
2016 Voting	14.8

7.3. Overall Health & Equity Scores

Metric	Result for Project Census Tract
CalEnviroScreen 4.0 Score for Project Location (a)	78.0
Healthy Places Index Score for Project Location (b)	11.0
Project Located in a Designated Disadvantaged Community (Senate Bill 535)	No

Project Located in a Low-Income Community (Assembly Bill 1550)	Yes
Project Located in a Community Air Protection Program Community (Assembly Bill 617)	No

a: The maximum CalEnviroScreen score is 100. A high score (i.e., greater than 50) reflects a higher pollution burden compared to other census tracts in the state.
b: The maximum Health Places Index score is 100. A high score (i.e., greater than 50) reflects healthier community conditions compared to other census tracts in the state.

7.4. Health & Equity Measures

No Health & Equity Measures selected.

7.5. Evaluation Scorecard

Health & Equity Evaluation Scorecard not completed.

7.6. Health & Equity Custom Measures

No Health & Equity Custom Measures created.

8. User Changes to Default Data

Screen	Justification
Land Use	Actual areas used.

2700 International

Area of Interest (AOI) Information

Area : 4,040,791.23 ft²

Mar 13 2024 12:06:56 Pacific Daylight Time

Summary

Name	Count	Area(ft²)	Length(ft)
Permitted Stationary Sources	1	N/A	N/A

Permitted Stationary Sources

#	Facility_I	Facility_N	Address	City	State
1	201685	Lucasey Lofts LP	2744 E 11TH ST	Oakland	CA

#	Zip	County	Latitude	Longitude	Details
1	94601	Alameda	37.778644	-122.233443	Generator

#	NAICS	NAICS_Sect	NAICS_Subs	NAICS_Indu	Cancer_Ris
1	531110	Real Estate and Rental and Leasing	Real Estate	Lessors of Residential Buildings and Dwellings	0.399000

#	Chronic_Ha	PM25	Count
1	0.000000	0.001000	1

NOTE: A larger buffer than 1000 feet may be warranted depending on proximity to significant sources.

Flood Maps | FEMA.gov | FEMA Flood Map Service Center | FEMA Flood Map Service Center | Planning Healthy Places

baaqmd.maps.arcgis.com/apps/webappviewer/index.html?id=51c2d0bc59244013ad9d52b8c35cbf66

RealQuest Professio... | FedEx | Tracking, Sh... | Planning and Zonin... | Hosting | SiriusXM Streaming... | ACHP E-Learning P... | National Register of... | Historic Preservatio... | 36CFRPart800_as_a... | Flood Map Change...

Layer List

Layers

- Conduct Further Study
- Implement Best Practices