Case File Number: CMD11-002 **March 2nd, 2011**

Location:	**5921 Shepherd Canyon Road. (See map on reverse)**
Assessors Parcel Numbers:	**(048E-7350-005-1 &2)**
Proposal:	Installation of a wireless telecommunication facility on top of an existing light pole involving: replacement of an existing 12" wide pole with mounted radome with a new 18" wide radome screen containing three panel antennas that will increase the existing pole height from 53' to 56'; and addition of a new equipment cabinet to the existing screened equipment area, and three sets of panel antennas inside radome screen.
Applicant:	Cortel Inc. for T-Mobile Wireless
Contact Person/ Phone Number:	Shannon McDougall (415)244-8018
Owner:	City Of Oakland
Case File Number:	**CMD11-002**
Planning Permits Required:	Major Conditional Use Permit and Design Review to install a wireless Telecommunication Macro Facility on the top of an existing light pole within the residential zone.
General Plan:	Hillside Residential
Zoning:	R-20 Low Density Residential Zone. S-10 Scenic Route Combing Zone.
Environmental Determination:	Exempt, Section 15301 of the State CEQA Guidelines; minor additions and alterations to an existing facility Exempt, Section 15183 of the State CEQA Guidelines; projects consistent with a community plan, general Plan or zoning.
Historic Status:	Not a Potential Designated Historic Property; Survey rating: n/a
Service Delivery District:	2
City Council District:	1
Date Filed:	1/11/2011
Finality of Decision:	Appealable to City Council within 10 Days
For Further Information:	Contact case planner Jason Madani at **(510) 238-4790** or jsmadani@oaklandnet.com

SUMMARY

The following staff report addresses the proposal to install a wireless Telecommunications Macro Facility on top of an existing light pole located at an Oakland Fire station site. The proposal is to replace an existing 12" wide radome with a new 18" wide radome containing three sets of panel antennas inside radome screen located on the same pole which will increase the existing pole height from 53' to 56'; add one equipment cabinet to the existing ground floor screened equipment area;. The site is located within a residential zone and residential properties. The site is in the R-20 Low Density Residential Zone and S-10 Scenic Route Combining Zone. The General Plan designation for the site is Hillside Residential.

CITY OF OAKLAND PLANNING COMMISSION

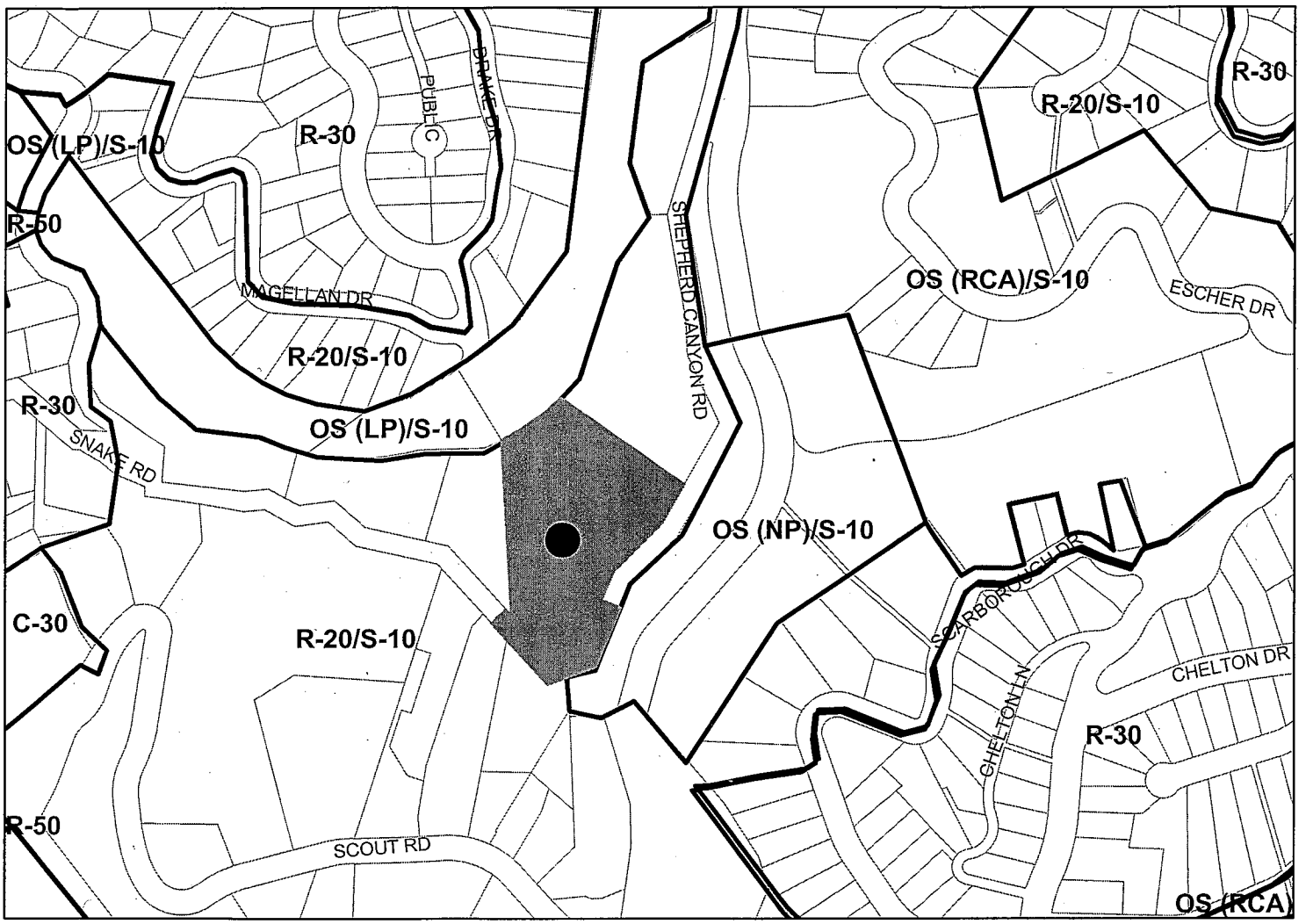

0 215 430 860 1,290 1,720 Feet

Case File: CMD11-002
Applicant: Cortel Inc. for T-Mobile Wireless
Address: 5921 Shepherd Canyon Road
Zone: R-20/S-10

PROJECT DESCRIPTION

The applicant (T-Mobile) is proposing to replace an existing 12" radome with a new 18" radome. The three set of panel antennas will be inside radome screen on the same pole and increase the existing pole height from 53' to 56'; add one equipment cabinet to the existing ground floor equipment cabinet enclosure area located in the Oakland Fire Station site. The proposed antennas and associated equipment will not be accessible to the public. **(See Attachment A).**

PROPERTY DESCRIPTION

The subject property is approximately 2.82 acres, and contains one principal building that serves as an Oakland Fire Station. The property is bounded by Shepherd Canyon Road and Snake Road. A City of Oakland utility yard is located across street. Currently T-Mobile has their antennas inside a 12" wide radome on top of an existing light pole and one equipment shelter located in a concrete cabinet enclosure near the Fire Station. T-Mobile Wireless is proposing to replace an existing 12" radome with a new 18" radome. The three sets of panel antennas will be inside radome screen on the same pole and increase the existing pole height from 53' to 56'; add one equipment cabinet to the existing ground floor equipment cabinet enclosure area located in the Oakland Fire Station site. The site is located in residential zone.

GENERAL PLAN ANALYSIS

The subject property is located within the Hillside Residential General Plan designation. The Hillside Residential land use classification is intended to identify, create, maintain and enhance neighborhood residential areas that are characterized by detached, single unit structures on hillside lots. The General Plan Conformity Guidelines is silent on Telecommunications Facilities in the Hillside Residential areas. The proposed telecommunication facilities will be within an 18" tall radome screen mounted on the existing light pole. Visual impacts will be minimal since the antennas will be screened and the equipment cabinets will be screened from public view. Therefore, the proposed unmanned wireless telecommunication facility will not adversely affect or detract from the residential characteristics of the neighborhood.

ZONING ANALYSIS

The project site is located in R-20 Low Density Residential and S-10 Scenic Route Combing. The intent of the R-20 Zone is: "to create, preserve, and enhance areas for single-family estate living at very low densities in spacious environments and is typically appropriate to portions of the Oakland hill area. The S-10 zone is intended to create, preserve, and enhance areas where hillside terrain, wooded canyons, and fine vistas or panoramas of Oakland, can be seen from the road. Although the project is located within a Residential Zone, the site is not near any residential building. The project requires a Major Conditional Use permit and Regular Design review, with special findings, to allow the expansion of an existing Macro Telecommunication Facility located within a Residential Zone. The special finding are ensure that the facility is compatible with surroundings and does not constitute an over-concentration of facilities in the area. Special findings required to approve the Design Review are to ensure that the facility is co-located and /or components are concealed to the extent possible. These findings are met by this proposal; the proposal is well-suited for function and is not located near any residential building and the antennas will be inside a radome screen and the purpose project complies with these

Special findings and therefore, the proposed application meets applicable R-20 and S-10 Zoning and City of Oakland Telecommunication Regulations.

ENVIRONMENTAL DETERMINATION

The California Environmental Quality Act (CEQA) Guidelines lists the projects that qualify as categorical exemptions from environmental review. The proposed project is categorically exempt from the environmental review requirements pursuant to Section 15301, additions and alterations to existing facilities, and Section 15183, projects consistent with a community plan, general plan or zoning.

KEY ISSUES AND IMPACTS

1. Conditional Use Permit

Section 17.14.070 and Section 17.134.20of the City of Oakland Planning Code requires a Major Conditional Use permit to install or to expand a Macro telecommunication facility in the R-20 Low Density Residential Zone. The required findings for a Major Conditional use Permit are listed and included in staff's evaluation as part of this report.

2. Regular Design Review

Section 17.136.040 and 17.128.070 of the City of Oakland Planning Code requires a Major Design Review to install or to expand a Macro Telecommunication facility fully attached to the existing light pole in the R-20 zone or within one hundred (100) feet of the boundary of any residential zone. The required findings for Regular Design Review findings are listed and included in staff's evaluation as part of this report.

2. Project Site

Section 17.128.110 of the City of Oakland Telecommunication Regulations indicate that new wireless facilities shall generally be located on designated properties or facilities in the following order of preference:

A. Co-located on an existing structure or facility with existing wireless antennas.
B. City owned properties or other public or quasi-public facilities.
C. Existing commercial or industrial structures in non-residential zones.
D. Existing commercial or industrial structures in residential zones.
E. Other non-residential uses in residential zones.
F. Residential uses in non-residential zones.
G. Residential uses in residential zones.

*Facilities locating on an A, B or C ranked preference do not require a site alternatives analysis.

Since the proposed project involves co-locating the installation of new antennas and associated equipment cabinets on an existing light pole, the proposed project meets: (B) co-locating on an existing City of Oakland light pole located in the Fire Station site in the Oakland hill area.

3. Project Design

Section 17.128.120 of the City of Oakland Telecommunications Regulations indicates that new wireless facilities shall generally be designed in the following order of preference:

A. Building or structure mounted antennas completely concealed from view.
B. Building or structure mounted antennas set back from roof edge, not visible from public right-of way.
C. Building or structure mounted antennas below roof line (facade mount, pole mount) visible from public right-of-way, painted to match existing structure.
D. Building or structure mounted antennas above roof line visible from public right of-way.
E. Monopoles.
F. Towers.

* Facilities designed to meet an A & B ranked preference does not require a site design alternatives analysis. Facilities designed to meet a C through F ranked preference, inclusive, must submit a site design alternatives analysis as part of the required application materials. (c) site design alternatives analysis shall, at a minimum, consist of:

a. Written evidence indicating why each higher preference design alternative can not be used. Such evidence shall be in sufficient detail that independent verification could be obtained if required by the City of Oakland Zoning Manager. Evidence should indicate if the reason an alternative was rejected was technical (e.g. incorrect height, interference from existing RF sources, inability to cover required area) or for other concerns (e.g. inability to provide utilities, construction or structural impediments).

City of Oakland Planning staff have reviewed (see attachment A alternative site analysis letter) and determined that the site selected is conforming to all other telecommunication regulation requirements. The project has met design criteria (C) since the proposal is a modification to an existing telecommunication and will be mounted on existing light pole within a radome screen and painted to match the color of the existing metal light pole. The proposed equipment cabinet will be within existing solid cabinet enclosure to minimize visual impacts.

4. Project Radio Frequency Emissions Standards

Section 17.128.130 of the City of Oakland Telecommunication Regulations require that the applicant submit the following verifications including requests for modifications to existing facilities:

a. The telecommunications regulations require that the applicant submit written documentation demonstrating that the emission from the proposed project are within the limits set by the Federal Communications Commission. In the document (attachment B) prepared by Hammett & Edison, Inc., Consulting engineers, the proposed project was evaluated for compliance with appropriate guidelines limiting human exposure to radio frequency electromagnetic fields. According to the report on the proposal, the project will comply with the prevailing standards for limiting public exposure to radio frequency energy and, therefore, the proposed site will operate within the current acceptable thresholds as established by the Federal government or any such agency that may be subsequently authorized to establish such standards.

b. Prior to final building permit sign off, an RF emissions report indicating that the site is actually operating within the acceptable thresholds as established by the Federal government or any such agency who may be subsequently authorized to establish such standards.

The information submitted with the initial application was an RF emissions report, **prepared by Hammett & Edison, Inc., Consulting Engineers (attachment B)**. The report states that the proposed project will comply with the prevailing standards for limiting public exposure to radio frequency energy and, therefore, will not cause a significant impact on the environment. Additionally, staff recommends that prior to the final building permit sign off; the applicant submits certified RF emissions report stating that the facility is operating within acceptable thresholds established by the regulatory federal agency.

CONCLUSION

City of Oakland planning staff believes that the proposed project and subject property can be developed to meet the established zoning and telecommunication regulations that were created and adopted to set certain criteria minimums and maximums for similar types of developments. Staff believes that the findings for approval can be made to support the Major Conditional Use Permit and Design Review.

RECOMMENDATIONS:

1. Affirm staff's environmental determination

2. Approve Design Review and Conditional Use Permit application CMD11-02 subject to the attached findings and conditions of approval

Prepared by:

Jason Madani
Planner II

Approved by:

Scott Miller
Zoning Manager

Approved for forwarding to the
City Planning Commission

Eric Angstadt, Deputy Director
Community & Economic Development Agency

ATTACHMENTS:

A. Project Plans & Photo simulations & Alternative Site Analysis
B. Hammett & Edison, Inc., Consulting Engineering RF Emissions Report

FINDINGS FOR APPROVAL

This proposal meets all the required findings under General Use Permit Criteria (OMC Section 17.134.050), Conditional Use Permit Criteria for Macro Facility (OMC Sec. 17.128.070), Regular Design Review Criteria for Non-Residential Facilities (OMC Sec. 17.136.050.(B), and Design Review Criteria for Macro Facility Sec.17.128.070(B), as set forth below and which are required to approve your application. Required findings are shown in **bold** type; reasons your proposal satisfies them are shown in normal type.

SECTION 17.134.050 – USE PERMIT FINDINGS:

A. That the location, size, design, and operating characteristics of the proposed development will be compatible with, and will not adversely affect, the livability or appropriate development of abutting properties and the surrounding neighborhood, with consideration to be given to harmony in scale, bulk, coverage, and density; to the availability of civic facilities and utilities; to harmful effect, if any upon desirable neighborhood character; to the generation of traffic and the capacity of surrounding streets; and to any other relevant impact of the development.

The applicant (T-Mobile) is proposing to replace an existing 12" wide radome with a new 18" wide radome. The three sets of panel antennas will be inside radome screen on the same pole and increase the existing pole height from 53' to 56'; add one equipment cabinet to the existing ground floor equipment cabinet enclosure area located in the Oakland Fire Station site. The three set of panel antennas inside a radome screen will not adversely affect the operating characteristic or livability of the existing area. The proposed antennas are screened with a radome material, and equipment cabinets are screened from public view. The proposed Telecommunication use is compatible with the existing fire station site. The proposed utility light pole height is similar to the adjacent emergency siren pole. Therefore, the proposed expansion will not be creating much of a change in the aesthetics of the existing Macro Telecommunication pole. The facility will be unmanned and will not create any additional vehicular traffic in the area.

B. That the location, design, and site planning of the proposed development will provide a convenient and functional living, working, shopping, or civic environment, and will be as attractive as the nature of the use and its location and setting warrant.

The location, design and site planning of the proposed development will provide a convenient and functional working, and will maintain the nature of the use of the use and its location and setting warrant. Although the project is located within a Residential Zone, but the subject site is a Fire Station that serves Oakland Hills residences. The proposal site is not near any residential building. and will therefore be a convenient location that will not affect the general quality and character of the neighborhood.

C. That the proposed development will enhance the successful operation of the surrounding area in its basic community functions, or will provide an essential service to the community or region.

The proposed development will enhance the successful operation of the surrounding area in its basic community function and will provide an essential service to the community or region. This will be achieved by improving the functional use of the site by providing a regional telecommunication facility for the community and will be available to police, fire, public safety organizations and the general public.

D. That the proposal conforms to all applicable design review criteria set forth in the DESIGN REVIEW PROCEDURE of Chapter 17.136 of the Oakland Planning Code.

The proposal conforms with all significant aspects of the design review criteria set forth in Chapter 17.136 of the Oakland Planning Code, as outlined below.

E. That the proposal conforms in all significant respects with the Oakland General Plan and with any other applicable plan or development control map which has been adopted by the City Council.

The subject property is located within the Hillside Residential General Plan designation. The Hillside Residential land use classification is intended to identify, create, maintain and enhance neighborhood residential areas that are characterized by detached, single unit structures on hillside lots. The General Plan Conformity Guidelines are silent on Telecommunications Facilities in the Hillside Residential areas. The proposal is to replace an existing 12"wide radome with a new 18" wide radome containing three sets of panel antennas inside radome screen located on the same pole which will increase the existing pole height from 53' to 56'; add one equipment cabinet to the existing ground floor screened equipment area. Visual impacts will be minimal since the antennas will be inside a radome screen and the equipment cabinets will be screened from public view. Therefore, the proposed unmanned wireless telecommunication facility will not adversely affect and detract from the residential characteristics of the neighborhood.

Section 17.128.070(C) CONDITIONAL USE PERMIT (CUP) FINDINGS FOR MACRO FACILITIES

1. The project must meet the special design review criteria listed in subsection B of this section (17.128.070B):

The proposed project meets the special design review criteria listed in section 17.128.070B.

2. The proposed project must not disrupt the overall community character:

Due to the proposed project co-locating with other existing telecommunication antennas and equipment, it will not disrupt the overall community character of the site.

17.136.050(B) – NONRESIDENTIAL DESIGN REVIEW CRITERIA:

1. That the proposal will help achieve or maintain a group of facilities which are well related to one another and which, when taken together, will result in a well-composed

design, with consideration given to site, landscape, bulk, height, arrangement, texture, materials, colors, and appurtenances; the relation of these factors to other facilities in the vicinity; and the relation of the proposal to the total setting as seen from key points in the surrounding area. Only elements of design which have some significant relationship to outside appearance shall be considered, except as otherwise provided in Section 17.136.060;

The proposal is to replace an existing 12"wide radome with a new 18" wide radome containing three sets of panel antennas inside radome screen located on the same pole which will increase the existing pole height from 53' to 56'; add one equipment cabinet to the existing ground floor screened equipment area. The three sets of panel antennas inside radome screen will not adversely affect the operating characteristic or livability of the existing area. The proposed antennas are screened with a radome material, and equipment cabinets are screened from public view. Therefore, the proposal will have minimized visual impacts from public view.

2. That the proposed design will be of a quality and character which harmonizes with, and serves to protect the value of, private and public investments in the area;

The antennas will be inside a radome screen and the equipment cabinets will be screened from public view. Therefore, the proposed unmanned wireless telecommunication facility will not adversely affect and detract from the residential characteristics of the neighborhood.

3. That the proposed design conforms in all significant respects with the Oakland General Plan and with any applicable design review guidelines or criteria, district plan, or development control map which have been adopted by the Planning Commission or City Council.

The subject property is located within the Hillside Residential General Plan designation. The Hillside Residential land use classification is intended to identify, create, maintain and enhance neighborhood residential areas that are characterized by detached, single unit structures on hillside lots. The General Plan Conformity Guidelines is silent on Telecommunications Facilities in the Hillside Residential areas. The proposal is to replace an existing 12"wide radome with a new 18" wide radome containing three sets of panel antennas inside radome screen located on the same pole which will increase the existing pole height from 53' to 56'; add one equipment cabinet to the existing ground floor screened equipment area. The three sets of panel antennas inside radome screen will not adversely affect and detract from the residential characteristic of the neighborhood.

<u>17.128.070(B) DESIGN REVIEW CRITERIA FOR MACRO FACILITIES</u>

1. Antennas should be painted and/or textured to match the existing structure:

The antennas are screened with in material that matches the existing pole to minimize the potential visual impact.

2. Antennas mounted on architecturally significant structures or significant architectural details of the building should be covered by appropriate casings which are manufactured to match existing architectural features found on the building: N/A

3. Where feasible, antennas can be placed directly above, below or incorporated with vertical design elements of a building to help in camouflaging:

The proposal is located on the fire station site and proposed extension of light pole is similar with the height of the adjacent existing emergency siren pole.

4. Equipment shelters or cabinets shall be screened from the public view by using landscaping, or materials and colors consistent with surrounding backdrop:

The existing equipment cabinets are within a concrete shelter and are not visible.

5. Equipment shelters or cabinets shall be consistent with the general character of the area.

The equipment cabinet shelter is not visible and consistent with character of subject site.

6. For antennas attached to the roof, maintain a 1:1 ratio for equipment setback; screen the antennas to match existing air conditioning units, stairs, or elevator towers; avoid placing roof mounted antennas in direct line with significant view corridors.

N/A

7. That all reasonable means of reducing public access to the antennas and equipment has been made, including, but not limited to, placement in or on buildings or structures, fencing, anti-climbing measures and anti-tampering devices.

The antennas will be mounted at a height of 56'on an existing light pole and will not be accessible to the public due to its location. The existing equipment cabinets are within a concrete shelter and are not visible.

CONDITIONS OF APPROVAL
CMD11-002

STANDARD CONDITIONS:

1. Approved Use
Ongoing
a) The project shall be constructed and operated in accordance with the authorized use as described in the application materials for case number **CMD11-002**, and the plans dated **December 16, 2010** and submitted on **January 11, 2011** and as amended by the following conditions. Any additional uses or facilities other than those approved with this permit, as described in the project description and the approved plans, will require a separate application and approval. Any deviation from the approved drawings, Conditions of Approval or use shall required prior written approval from the Director of City Planning or designee.

b) This action by the City Planning Commission ("this Approval") includes the approvals set forth below. This Approval includes: **Installation of a wireless telecommunication facility on top of an existing light pole involving: replacement of an existing 12" wide pole with mounted radome with a new 18" wide radome screen containing three panel antennas that will increase the existing pole height from 53' to 56'; and addition of a new equipment cabinet to the existing screened equipment area, located within City of Oakland Fire Station site.**

2. Effective Date, Expiration, Extensions and Extinguishment
Ongoing
Unless a different termination date is prescribed, this Approval shall expire **two calendar years** from the approval date, unless within such period all necessary permits for construction or alteration have been issued, or the authorized activities have commenced in the case of a permit not involving construction or alteration. Upon written request and payment of appropriate fees submitted no later than the expiration date of this permit, the Director of City Planning or designee may grant a one-year extension of this date, with additional extensions subject to approval by the approving body. Expiration of any necessary building permit for this project may invalidate this Approval if the said extension period has also expired.

3. Scope of This Approval; Major and Minor Changes
Ongoing
The project is approved pursuant to the **Oakland Planning Code** only. Minor changes to approved plans may be approved administratively by the Director of City Planning or designee. Major changes to the approved plans shall be reviewed by the Director of City Planning or designee to determine whether such changes require submittal and approval of a revision to the approved project by the approving body or a new, completely independent permit.

4. Conformance with other Requirements
Prior to issuance of a demolition, grading, P-job, or other construction related permit

a) The project applicant shall comply with all other applicable federal, state, regional and/or local codes, requirements, regulations, and guidelines, including but not limited to those

imposed by the City's Building Services Division, the City's Fire Marshal, and the City's Public Works Agency.

b) The applicant shall submit approved building plans for project-specific needs related to fire protection to the Fire Services Division for review and approval, including, but not limited to automatic extinguishing systems, water supply improvements and hydrants, fire department access, and vegetation management for preventing fires and soil erosion.

5. <u>Conformance to Approved Plans; Modification of Conditions or Revocation</u>

Ongoing

a) Site shall be kept in a blight/nuisance-free condition. Any existing blight or nuisance shall be abated within 60-90 days of approval, unless an earlier date is specified elsewhere.

b) The City of Oakland reserves the right at any time during construction to require certification by a licensed professional that the as-built project conforms to all applicable zoning requirements, including but not limited to approved maximum heights and minimum setbacks. Failure to construct the project in accordance with approved plans may result in remedial reconstruction, permit revocation, permit modification, stop work, permit suspension or other corrective action.

c) Violation of any term, conditions or project description relating to the Approvals is unlawful, prohibited, and a violation of the Oakland Municipal Code. The City of Oakland reserves the right to initiate civil and/or criminal enforcement and/or abatement proceedings, or after notice and public hearing, to revoke the Approvals or alter these conditions if it is found that there is violation of any of the conditions or the provisions of the Planning Code or Municipal Code, or the project operates as or causes a public nuisance. This provision is not intended to, nor does it; limit in any manner whatsoever the ability of the City to take appropriate enforcement actions.

6. <u>Signed Copy of the Conditions</u>

With submittal of a demolition, grading, and building permit

A copy of the approval letter and conditions shall be signed by the property owner, notarized, and submitted with each set of permit plans to the appropriate City agency for this project.

7. <u>Indemnification</u>

a) ***Ongoing*** The project applicant shall defend (with counsel reasonably acceptable to the City), indemnify, and hold harmless the City of Oakland, the Oakland City Council, the City of Oakland Redevelopment Agency, the Oakland City Planning Commission and their respective agents, officers, and employees (hereafter collectively called the City) from any claim, action, or proceeding (including legal costs and attorney's fees) against the City to attack, set aside, void or annul this Approval, or any related approval by the City. The City shall promptly notify the project applicant of any claim, action or proceeding and the City shall cooperate fully in such defense. The City may elect, in its sole discretion, to participate in the defense of said claim, action, or proceeding. The project applicant shall reimburse the City for its reasonable legal costs and attorney's fees.

b) Within ten (10) calendar days of the filing of a claim, action or proceeding to attack, set aside, void, or annul this Approval, or any related approval by the City, the project applicant shall execute a Letter Agreement with the City, acceptable to the Office of the City Attorney, which memorializes the above obligations and this condition of approval. This condition/obligation shall survive termination, extinguishment, or invalidation of this, or any related approval. Failure to timely execute the Letter Agreement does not relieve the project applicant of any of the obligations contained in 7(a) above, or other conditions of approval.

8. Compliance with Conditions of Approval
Ongoing
The project applicant shall be responsible for compliance with the recommendations in any submitted and approved technical report and all the Conditions of Approval set forth below at its sole cost and expense, and subject to review and approval of the City of Oakland.

9. Severability
Ongoing
Approval of the project would not have been granted but for the applicability and validity of each and every one of the specified conditions, and if any one or more of such conditions is found to be invalid by a court of competent jurisdiction this Approval would not have been granted without requiring other valid conditions consistent with achieving the same purpose and intent of such Approval.

10. Job Site Plans
Ongoing throughout demolition, grading, and/or construction
At least one (1) copy of the stamped approved plans, along with the Approval Letter and Conditions of Approval, shall be available for review at the job site at all times.

11. Special Inspector/Inspections, Independent Technical Review, Project Coordination and Management
Prior to issuance of a demolition, grading, and/or construction permit
The project applicant may be required to pay for on-call special inspector(s)/inspections as needed during the times of extensive or specialized plan check review, or construction. The project applicant may also be required to cover the full costs of independent technical and other types of peer review, monitoring and inspection, including without limitation, third party plan check fees, including inspections of violations of Conditions of Approval. The project applicant shall establish a deposit with the Building Services Division, as directed by the Building Official, Director of City Planning or designee.

12. Days/Hours of Construction Operation
Ongoing throughout demolition, grading, and/or construction
The project applicant shall require construction contractors to limit standard construction activities as follows:

a) Construction activities are limited to between 7:00 AM and 7:00 PM Monday through Friday, except that pile driving and/or other extreme noise generating activities greater than 90 dBA shall be limited to between 8:00 a.m. and 4:00 p.m. Monday through Friday.

b) Any construction activity proposed to occur outside of the standard hours of 7:00 am to 7:00 pm Monday through Friday for special activities (such as concrete pouring which may require more continuous amounts of time) shall be evaluated on a case by case basis, with criteria including the proximity of residential uses and a consideration of resident's preferences for whether the activity is acceptable if the overall duration of construction is shortened and such construction activities shall only be allowed with the prior written authorization of the Building Services Division.

c) Construction activity shall not occur on Saturdays, with the following possible exceptions:

i. Prior to the building being enclosed, requests for Saturday construction for special activities (such as concrete pouring which may require more continuous amounts of time), shall be evaluated on a case by case basis, with criteria including the proximity of residential uses and a consideration of resident's preferences for whether the activity is acceptable if the overall duration of construction is shortened. Such construction activities shall only be allowed on Saturdays with the prior written authorization of the Building Services Division.

ii. After the building is enclosed, requests for Saturday construction activities shall only be allowed on Saturdays with the prior written authorization of the Building Services Division, and only then within the interior of the building with the doors and windows closed.

d) No extreme noise generating activities (greater than 90 dBA) shall be allowed on Saturdays, with no exceptions.

e) No construction activity shall take place on Sundays or Federal holidays.

f) Construction activities include but are not limited to: truck idling, moving equipment (including trucks, elevators, etc) or materials, deliveries, and construction meetings held on-site in a non-enclosed area.

PROJECT SPECIFIC CONDTIONS:

12. Radio Frequency Emissions
Prior to the final building permit sign off.
The applicant shall submit a certified RF emissions report stating the facility is operating within the acceptable standards established by the regulatory Federal Communications Commission.

13. Sinking Fund for Facility Removal or Abandonment.
Prior to issuance of a building permit
The applicant shall provide proof of the establishment of a sinking fund to cover the cost of removing the facility if it is abandoned within a prescribed period. The word "abandoned" shall mean a facility that has not been operational for a six (6) month period, except where non-operation is the result of maintenance of renovation activity pursuant to valid City permits. The sinking fund shall be established to cover a two year period, at a financial institution approved by the City's Office of Budget and Finance. The sinking fund payment shall be adequate to

determined by the office of Budget and Finance and shall be adequate to defray expenses associated with the removal of the telecommunication facility.

14. Operational
Ongoing.
Noise levels from the activity, property, or any mechanical equipment on site shall comply with the performance standards of Section 17.120 of the Oakland Planning Code and Section 8.18 of the Oakland Municipal Code. If noise levels exceed these standards, the activity causing the noise shall be abated until appropriate noise reduction measures have been installed and compliance verified by the Planning and Zoning Division and Building Services.

T-MOBILE WEST CORPORATION

T-Mobile

1855 GATEWAY BLVD, 9TH FLOOR,
CONCORD, CA. 94520

ATTACHMENT A

BA02066A
SHEPHERD CANYON

PROJECT DESCRIPTION

THIS PROJECT IS A MODIFICATION/UPGRADE TO THE EXISTING LOCAL PERSONAL COMMUNICATION SYSTEM (PCS), WHICH TRANSMITS AND RECEIVES RADIO SIGNALS AS PART OF A REGIONAL PCS NETWORK FOR T-MOBILE. THIS PCS SITE IS LOCATED OUTSIDE IN THE OPEN, ON AN EXISTING MONOPOLE LOCATED IN THE CITY OF OAKLAND, CALIFORNIA.

THE MAIN COMPONENTS OF THIS UPGRADE ARE: THE REMOVAL OF AN EXISTING RADOME CONTAINING THREE (3) DUAL PORT PANEL ANTENNAS, AND REPLACING IT WITH A NEW RADOME, CONTAINING THREE (3) NEW QUAD PORT ANTENNAS AND (6) RMA'S AT THE SAME LOCATION AS THE ORIGINAL RADOME, AND PAINTED TO MATCH THE EXISTING STRUCTURE. ALSO, THE PLACEMENT OF SIX (6) ADDITIONAL COAXIAL CABLES TO ACCOMMODATE THE NEW QUAD PORT ANTENNAS IN THE SAME LOCATION AS THE EXISTING CABLES, AND THE ADDITION OF A 3106 BTS CABINET WITHIN THE EXISTING ENCLOSURE HOUSING.

THIS PCS SITE IS PART OF THE EMERGENCY E911 BROADCAST SYSTEM AND CAN BE TURNED OFF REMOTELY WITHIN 4 MINUTES AFTER RECEIVING AN AUTHORIZED CALL ON THE 1-888 NUMBER POSTED ON THE RADIO EQUIPMENT BY ANY EMERGENCY PERSONNEL WHO HAS A NEED TO HAVE THIS SITE'S RADIO SIGNAL TURNED OFF, OR DOWN DUE TO AN EMERGENCY.

APPROVALS (AS REQUIRED)

APPROVED BY:	INITIALS:	DATE:
LANDLORD:		
LEASING:		
RF ENGINEER:	S.D.	4-14-09
ZONING MANAGER:	S.M.	4-13-09
CONSTRUCTION:	K.F.	4-20-09
CONSTRUCTION MANAGER:	E.R.	12-14-10
POWER/TELCO:		
PG&E:		
SITE ACQUISITION:	M.M.	
PROJECT MANAGER:		

VICINITY MAP

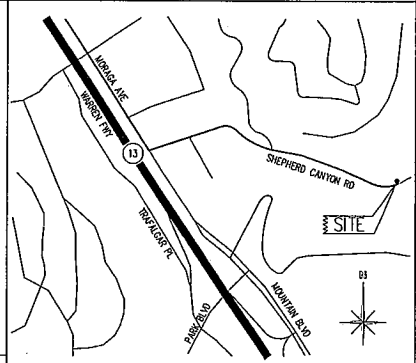

DIRECTIONS FROM T-MOBILE, CONCORD

ESTIMATED TIME: 22 MINUTES ESTIMATED DISTANCE: 18.51 MILES

- MERGE ONTO I-680 S VIA THE EXIT ON THE LEFT TOWARD OAKLAND/SAN JOSE. 3.5 MI
- MERGE ONTO CA-24 W TOWARD OAKLAND/LAFAYETTE. 11.0 MI
- MERGE ONTO CA-13 S VIA EXIT 5A TOWARD HAYWARD. 1.4 MI
- TAKE THE MORAGA AVE EAST EXIT TOWARD THORNHILL DR/MONTCLAIR DIST. 0.3 MI
- MERGE ONTO MORAGA AVE. 0.7 MI
- MORAGA AVE BECOMES MOUNTAIN BLVD. 0.1 MI
- TURN LEFT ONTO SHAKE RD. 0.2 MI
- STAY STRAIGHT TO GO ONTO SHEPHERD CANYON RD. 0.1 MI
- END AT 5900 SHEPHERD CANYON RD OAKLAND, CA 94611-2753

SITE ENVIRONMENTAL INFORMATION

NUMBER OF BTS UNITS HAVING BATTERIES: 1
NUMBER OF BATTERIES IN EACH BTS UNIT: 4
MAKE AND MODEL NUMBER OF BATTERIES: NSB100FT
TOTAL AMOUNT OF ELECTROLYTE IN EACH BATTERY: ..... 1.2 GALLONS
TOTAL AMOUNT OF ACID IN EACH BATTERY: ..... .5 GALLONS
TOTAL AMOUNT OF ELECTROLYTE ON THE SITE: ..... 4.8 GALLONS
TOTAL AMOUNT OF ACID ON THE SITE: ..... 2.0 GALLONS

PROJECT INFORMATION

APPLICANT/LESSEE
T-MOBILE WEST CORPORATION
1855 GATEWAY BLVD, 9TH FLOOR,
CONCORD, CALIFORNIA 94520
CONTACT: DAVE JENSEN
TELEPHONE: (925) 521-5500

PROPERTY OWNER:
NAME: CITY OF OAKLAND
ADDRESS: 250 FRANK OGAWA PLAZA
OAKLAND, CA 94612
CONTACT: JASON MADANI
PHONE: (510) 238-3940

PROPERTY INFORMATION
SITE NAME: SHEPHERD CANYON
SITE NUMBER: BA02066A
SITE ADDRESS: 5921 SHEPHERD CANYON RD.
OAKLAND, CA

GEODETIC COORDINATES (NAD83 DATUM)
LATITUDE: 37° 49' 24.89"
LONGITUDE: 122° 12' 11.35"

LEGAL DESCRIPTION

HANDICAP REQUIREMENTS
FACILITY IS UNMANNED AND NOT FOR HUMAN HABITATION. HANDICAPPED ACCESS AND REQUIREMENTS NOT REQUIRED, IN ACCORDANCE WITH CALIFORNIA STATE ADMINISTRATIVE CODE, PART 2, TITLE 24, SECTION 11058.3.42, EXCEPTION 1.

PLANNING PROJECT TEAM
SDG ARCHITECTS INC.
3361 WALNUT BLVD, SUITE 120,
BRENTWOOD, CA 94513
PROJECT MANAGER: RALPH STRAUSS
TELEPHONE: (925) 634-7000

PROJECT MANAGER: BRIAN LEEGWATER
TELEPHONE: (510) 388-0342

CONSTRUCTION MANAGER: ERICK RIVERA SAENZ
TELEPHONE: (415) 254-4725

PLANNING MANAGER: SHANNON McDOUGALL
TELEPHONE: (415) 244-8018

RF ENGINEER: SUKAMAR DASH
TELEPHONE: (707) 342-8410

A.P.N.: UNKNOWN
CURRENT ZONING: R-30/RESIDENTIAL
ADJACENT ZONING: R-30/RESIDENTIAL

JURISDICTION: CITY OF OAKLAND
CONTACT: JASON MADANI
PHONE: (510) 238-3940
ADDRESS: 250 FRANK OGAWA PLAZA #2214
OAKLAND, CA 94612

CODE COMPLIANCE

ALL WORK AND MATERIALS SHALL BE PERFORMED AND INSTALLED IN ACCORDANCE WITH THE CURRENT EDITIONS OF THE FOLLOWING CODES AS ADOPTED BY THE LOCAL GOVERNING AUTHORITIES. NOTHING IN THESE PLANS IS TO BE CONSTRUCTED TO PERMIT WORK NOT CONFORMING TO THESE CODES.

1. CALIFORNIA BUILDING CODE CBC-2007
2. CALIFORNIA ADMINISTRATIVE CODE (INCL. TITLES 24 & 25) 2001
3. ANSI/EIA-222-F LIFE SAFETY CODE
4. NFPA-101-1997
5. CALIFORNIA ELECTRICAL CODE CEC-2004
6. CALIFORNIA MECHANICAL CODE CMC-2001
7. CALIFORNIA PLUMBING CODE CPC-2001
8. LOCAL BUILDING CODE(S)
9. CITY AND/OR COUNTY ORDINANCES
10. MUST COMPLY TO LATEST CALIFORNIA FIRE CODE, (AND LATEST MUNICIPAL FIRE CODE).

SHEET INDEX

T-1	TITLE SHEET, PROJECT INFORMATION
T-2	GENERAL NOTES, LEGENDS, SPECIAL INSPECTIONS & ABBREVIATIONS
A-1	OVERALL SITE PLAN
A-2	EXISTING AND PROPOSED SITE ELEVATIONS
A-3	EXISTING AND PROPOSED EQUIPMENT PLANS
A-4	EXISTING AND PROPOSED EQUIPMENT ELEVATIONS
A-5	EXISTING AND PROPOSED ANTENNA PLANS AND ELEVATIONS
D-1	DETAIL SHEET
E-1	GENERAL ELECTRICAL NOTES, ABBREVIATIONS, AND LABELS
E-2	SINGLE LINE DIAGRAM AND PANEL SCHEDULE
G-1	GROUNDING SHEET

RFDS VERSION 27 DATED: 01/16/09

ISSUE STATUS

△	DATE	DESCRIPTION	REV
	04/01/09	80% CD	0
	04/22/09	100% CD	1
	04/30/09	100% CD	2
	12/08/10	100% CD	3
	12/16/10	CD'S REVISED	4

SDG JOB NO. 250.115

SDG Architects, Inc.
Architecture / Planning
3361 Walnut Blvd. Ste. 120
Brentwood, CA 94513
(925) 634-7000
FAX: (925) 634-8020

STAMP

T-MOBILE WEST CORPORATION
T-Mobile
1855 GATEWAY BLVD, 9TH FLOOR
CONCORD, CA. 94520

SHEPHERD CANYON
BA 02066A
5921 SHEPHERD CANYON RD.
OAKLAND, CA

SHEET TITLE:
TITLE SHEET & PROJECT INFORMATION

T-1

W:\PROJECTS\BA02066A - Shepherd Canyon\CD\BA02066A Shepherds Canyon 100CD_REV4.dwg, 12/29/2010 11:20:38 AM, swalker

	SPOT ELEVATION (DATUM)	AL	ALUMINUM	FS	FARSIDE	R	RADIUS
		ALY	ALLOY	FSTNR	FASTENER	RAD	RADIATION
X	FLAG NOTE	ANT	ANTENNA	GALV	GALVANIZED	RC	RAD CENTER
X	ITEM BALLOON (DETAIL SHEETS)	AGL	ABOVE GROUND LEVEL	GA	GAUGE	RCVR	RECEIVER
				GEN	GENERATOR	RCPT	RECEPTACLE
		AMSL	ABOVE MEAN SEA LEVEL	GND	GROUND/GROUNDING	RELOC	RELOCATED
X/X	DETAIL REFERENCE			ID	INSIDE DIAMETER	REQD	REQUIRED
		APVD	APPROVED	MATL	MATERIAL	SH	SHEET
		APPROX	APPROXIMATE	MAX	MAXIMUM	SPLY	SUPPLY
		AR, A/R	AS REQUIRED	MFR	MANUFACTURER	SS	STAINLESS STL
X/X	SECTION REFERENCE	BAT	BATTERY	MTD	MOUNTED	STD	STANDARD
		BC	BOLT CIRCLE	MTG	MOUNTING	STL	STEEL
		BLDG	BUILDING	MTR	METER	STRL	STRUCTURAL
AZ = XX° SECTOR X	ANTENNA AZIMUTH SYM	BRKT	BRACKET	MAX	MAXIMUM	SQ	SQUARE
		CAB	CABINET	MIN	MINIMUM	SW	SWITCH
	CENTERLINE	CL	CENTERLINE	(N)	NEW	THD	THREAD
		CONC	CONCRETE	NS	NEARSIDE	THK	THK
	PROPERTY/LEASE LINE	CND	CONDUIT	NTS	NOT TO SCALE	TNSD	TINSED
		DN	DOWN	OC	ON CENTER	TYP	TYPICAL
— C — C —	TELEPHONE CONDUIT	(E)	EXISTING	OD	OUTSIDE DIAMETER	UBC	UNIFORM BUILDING CODE
		EA	EACH	(P)	PROPOSED		
— P — P —	POWER CONDUIT	EL	ELEVATION	PLYWD	PLYWOOD	W/	WITH
		EMBED	EMBEDMENT	PL	PLACES	W/O	WITHOUT
— T — T —	TELEPHONE CONDUIT	EMER	EMERGENCY	PNL	PANEL	XFMR	TRANSFORMER
		ENCL	ENCLOSURE	P/O	PART OF	XMTR	TRANSMITTER
— E — E —	ELECTRICAL CONDUIT	EQPT	EQUIPMENT	POSN	POSITION		
		EQ SP	EQUAL SPACE	PRELIM	PRELIMINARY		
— A — A —	COAXIAL CABLE	HGT	HEIGHT	PWR	POWER		
		(F)	FUTURE	QTY	QUANTITY		
— O/H — O/H —	OVERHEAD CONDUCTORS	FLR	FLOOR				
		FT	FOOT				
— X — X —	CHAIN LINK FENCING						

LEGENDS & ABBREVIATIONS 1

SUBCONTRACTOR'S WORK SHALL COMPLY WITH ALL APPLICABLE NATIONAL, STATE, AND LOCAL CODES AS ADOPTED BY THE LOCAL AUTHORITY HAVING JURISDICTION (AHJ) FOR THE LOCATION.

THE EDITION OF THE AHJ ADOPTED CODES AND STANDARDS IN EFFECT ON THE DATE OF CONTRACT AWARD SHALL GOVERN THE DESIGN.

BUILDING CODE:
[UNIFORM BUILDING CODE (UBC), 2001 AS ADOPTED BY 2007 CALIFORNIA BUILDING CODE]

FIRE CODE:
[UNIFORM BUILDING CODE (UBC), 1997 AS ADOPTED BY 2007 CALIFORNIA FIRE CODE]

ELECTRICAL CODE:
[NATIONAL ELECTRICAL CODE (NEC), 2002 AS ADOPTED BY 2004 CALIFORNIA ELECTRICAL CODE]

PLUMBING CODE:
[UNIFORM PLUMBING CODE (UPC), 2001 AS ADOPTED BY 2001 CALIFORNIA PLUMBING CODE]

MECHANICAL CODE:
[UNIFORM MECHANICAL CODE (UMC), 2001 AS ADOPTED BY 2001 CALIFORNIA MECHANICAL CODE]

SUBCONTRACTOR'S WORK SHALL COMPLY WITH THE LATEST EDITION OF THE FOLLOWING STANDARDS:

-AMERICAN CONCRETE INSTITUTE (ACI) 318, BUILDING CODE REQUIREMENTS FOR STRUCTURAL CONCRETE
-AMERICAN INSTITUTE OF STEEL CONSTRUCTION(AISC), MANUAL OF STEEL CONSTRUCTION, ASD, NINTH EDITION
-TELECOMMUNICATIONS INDUSTRY ASSOCIATION (TIA) 222-F, STRUCTURAL STANDARD FOR STRUCTURAL ANTENNA TOWER AND ANTENNA SUPPORTING STRUCTURES
-INSTITUTE FOR ELECTRICAL AND ELECTRONICS ENGINEERS (IEEE) 81, GUIDE FOR MEASURING EARTH RESISTIVITY, GROUND IMPEDANCE, AND EARTH SURFACE POTENTIALS OF A GROUND SYSTEM IEEE 1100 (1999) RECOMMENDED PRACTICE FOR POWERING AND GROUNDING OF ELECTRONIC EQUIPMENT
-IEEE C62.41, RECOMMENDED PRACTICES ON SURGE VOLTAGES IN LOW VOLTAGE AC POWER CIRCUITS (FOR LOCATION CATEGORY "C3" AND "HIGH SYSTEM EXPOSURE")

TIA 607 COMMERCIAL BUILDING GROUNDING AND BONDING REQUIREMENTS FOR TELECOMMUNICATIONS TELCORDIA GR-63 NETWORK EQUIPMENT-BUILDING SYSTEM (NEBS): PHYSICAL PROTECTION
TELCORDIA GR-347 CENTRAL OFFICE POWER WIRING
TELCORDIA GR-1275 GENERAL INSTALLATION REQUIREMENTS
TELCORDIA GR-1503 COAXIAL CABLE CONNECTIONS

ANY AND ALL OTHER LOCAL & STATE LAWS & REGULATIONS

FOR ANY CONFLICTS BETWEEN SECTIONS OF LISTED CODES AND STANDARDS REGARDING MATERIAL, METHODS OF CONSTRUCTION, OR OTHER REQUIREMENTS, THE MOST RESTRICTIVE REQUIREMENT SHALL GOVERN. WHERE THERE IS CONFLICT BETWEEN A GENERAL REQUIREMENT AND A SPECIFIC REQUIREMENT, THE SPECIFIC REQUIREMENT SHALL GOVERN.

APPLICABLE CODES, REGULATIONS AND STANDARDS 2

1. THE CONTRACTOR SHALL NOTIFY T-MOBILE (WHERE REQUIRED) OF ANY ERRORS, OMISSIONS, OR INCONSISTENCIES AS THEY MAY BE DISCOVERED IN PLANS, DOCUMENTS, NOTES, OR SPECIFICATIONS PRIOR TO STARTING CONSTRUCTION INCLUDING, BUT NOT LIMITED BY, DEMOLITION. THE CONTRACTOR SHALL BE RESPONSIBLE FOR CORRECTING ANY ERROR, OMISSION, OR INCONSISTENCY AFTER THE START OF CONSTRUCTION WHICH HAS NOT BEEN BROUGHT TO THE ATTENTION OF T-MOBILE (WHERE REQUIRED) AND SHALL INCUR ANY EXPENSES TO RECTIFY THE SITUATION. THE MEANS OF CORRECTING ANY ERROR SHALL FIRST BE APPROVED BY T-MOBILE (WHERE REQUIRED).

2. THE CONTRACTOR SHALL FIELD VERIFY ALL EXISTING CONDITIONS PRIOR TO THE START OF ANY WORK. DISCREPANCIES WILL BE REPORTED IMMEDIATELY TO T-MOBILE (WHERE REQUIRED). THE CONTRACTOR SHALL BE RESPONSIBLE FOR ALL WORK AND MATERIALS INCLUDING THOSE FURNISHED BY THE SUBCONTRACTOR(S).

3. A COPY OF GOVERNING AGENCY APPROVED PLANS SHALL BE KEPT IN A PLACE SPECIFIED BY THE GOVERNING AGENCY, AND BY LAW, SHALL BE AVAILABLE FOR INSPECTION AT ALL TIMES. THE PLANS ARE NOT TO BE USED BY THE WORKMEN. ALL CONSTRUCTION SETS SHALL REFLECT THE SAME INFORMATION AS GOVERNING AGENCY APPROVED PLANS. THE CONTRACTOR SHALL ALSO MAINTAIN ONE SET OF PLANS, IN GOOD CONDITION, COMPLETE WITH ALL REVISIONS, ADDENDA, AND CHANGE ORDERS ON THE PREMISES AT ALL TIMES UNDER THE DIRECT CARE OF THE SUPERINTENDENT. THE CONTRACTOR SHALL SUPPLY T-MOBILE (WHERE REQUIRED) WITH A COPY OF ALL REVISIONS, ADDENDA, AND/OR CHANGE ORDERS AT THE CONCLUSION OF THE WORK AS A PART OF THE AS-BUILT DRAWING RECORDS.

GENERAL NOTES 3

4. THE CONTRACTOR SHALL STUDY THE STRUCTURAL, ELECTRICAL, MECHANICAL, AND PLUMBING PLANS AND CROSS CHECK THEIR DETAILS, NOTES, DIMENSIONS, AND ALL REQUIREMENTS PRIOR TO THE START OF ANY WORK.

5. THE CONTRACTOR SHALL BE RESPONSIBLE FOR THE COMPLETE SECURITY OF THE PROJECT AND SITE WHILE THE WORK IS IN PROGRESS UNTIL THE JOB IS COMPLETE.

6. THE CONTRACTOR HAS THE RESPONSIBILITY OF LOCATING ALL EXISTING UTILITIES WHETHER OR NOT SHOWN ON THE PLANS, AND TO PROTECT THEM FROM DAMAGE. THE CONTRACTOR, OR SUBCONTRACTOR AS SPECIFIED IN THE AGREEMENT BETWEEN SUBCONTRACTOR AND CONTRACTOR, SHALL BEAR THE EXPENSES OF REPAIR AND/OR REPLACEMENT OF UTILITIES OR OTHER PROPERTY DAMAGE BY OPERATIONS IN CONJUNCTION WITH THE EXECUTION OF THE WORK.

7. THE REFERENCES ON THE DRAWINGS ARE FOR CONVENIENCE ONLY AND SHALL NOT LIMIT THE APPLICATION OF ANY DRAWING OR DETAIL.

8. ALL CONSTRUCTION THROUGHOUT THE PROJECT SHALL CONFORM TO TITLE 24 OF THE CALIFORNIA CODE OF REGULATIONS. EXCEPT WHERE EXEMPTED.

9. NOT USED

10. ALL EXISTING CONSTRUCTION, EQUIPMENT, AND FINISHES NOTED TO BE REMOVED SHALL BECOME THE PROPERTY OF THE CONTRACTOR AND WILL BE REMOVED FROM THE SITE WITH THE FOLLOWING EXCEPTIONS: A) PROPERTY NOTED TO BE RETURNED TO THE OWNER. B) PROPERTY NOTED TO BE REMOVED BY THE OWNER.

11. THE GOVERNING AGENCIES, CODE AUTHORITIES, AND BUILDING INSPECTORS SHALL PROVIDE THE MINIMUM STANDARDS FOR CONSTRUCTION TECHNIQUES, MATERIALS, AND FINISHES USED THROUGHOUT THE PROJECT. TRADE STANDARDS AND/OR PUBLISHED MANUFACTURERS SPECIFICATIONS MEETING OR EXCEEDING DESIGN REQUIREMENTS SHALL BE USED FOR INSTALLATION.

12. WHEN REQUIRED STORAGE OF MATERIALS OCCURS, THEY SHALL BE EVENLY DISTRIBUTED OVER ROUGH FRAMED FLOORS OR ROOFS SO AS NOT TO EXCEED THE DESIGNED LIVE LOADS FOR THE STRUCTURE. TEMPORARY SHORING AND/OR BRACING IS TO BE PROVIDED WHERE THE STRUCTURE HAS NOT ATTAINED THE DESIGN STRENGTH FOR THE CONDITIONS PRESENT.

13. DRAWINGS ARE NOT TO BE SCALED UNDER ANY CIRCUMSTANCE. T-MOBILE (WHERE REQUIRED) IS NOT RESPONSIBLE FOR ANY ERRORS RESULTING FROM THIS PRACTICE WRITTEN DIMENSIONS TAKE PRECEDENCE OVER SCALE SHOWN ON PLANS.

14. NOT USED
15. NOT USED

16. OWNER, CONTRACTOR, AND T-MOBILE (WHERE REQUIRED) SHALL MEET JOINTLY TO VERIFY ALL DRAWINGS AND SPECIFICATIONS PRIOR TO THE START OF CONSTRUCTION.

17. THE PROJECT, WHEN COMPLETED, SHALL COMPLY WITH LOCAL SECURITY CODES AND TITLE-24 ENERGY CONSERVATION REQUIREMENTS. (TITLE-24 WHEN APPLICABLE)

18. NEW CONSTRUCTION ADDED TO EXISTING CONSTRUCTION SHALL MATCH IN FORM, TEXTURE, FINISH, AND IN MATERIALS EXCEPT AS NOTED IN THE PLANS AND SPECIFICATIONS.

19. NOT USED
20. NOT USED
21. NOT USED

22. THE CONTRACTOR IS TO PROVIDE PROTECTION FOR ADJOINING PROPERTIES FROM PHYSICAL HARM, NOISE, DUST, DIRT, AND FIRE AS REQUIRED BY THE GOVERNING AGENCIES.

23. NOT USED

24. THE CONTRACTOR IS RESPONSIBLE FOR THE STORAGE OF ALL MATERIALS AND SHALL NOT DO SO ON PUBLIC PROPERTY WITHOUT A PERMIT TO DO SO FROM THE GOVERNING AGENCIES FOR THIS PURPOSE.

25. GENERAL NOTES AND STANDARD DETAILS ARE THE MINIMUM REQUIREMENTS TO BE USED IN CONDITIONS WHICH ARE NOT SPECIFICALLY SHOWN OTHERWISE.

26. TRADES INVOLVED IN THE PROJECT SHALL BE RESPONSIBLE FOR THEIR OWN CUTTING, FITTING, PATCHING, ETC., SO AS TO BE RECEIVED PROPERLY BY THE WORK OF OTHER TRADES.

27. ALL DEBRIS AND REFUSE IS TO BE REMOVED FROM THE PROJECT PREMISES AND SHALL BE LEFT IN A CLEAN (BROOM FINISH) CONDITION AT ALL TIMES BY EACH TRADE AS THEY PERFORM THEIR OWN PORTION OF THE WORK.

28. T-MOBILE (WHERE REQUIRED) DOES NOT GUARANTEE ANY PRODUCTS, FIXTURES, AND/OR ANY EQUIPMENT NAMED BY A TRADE OR MANUFACTURER. GUARANTEE OR WARRANTY THAT MAY BE IN EFFECT IS DONE SO THROUGH THE COMPANY OR MANUFACTURER PROVIDING THE PRODUCT, FIXTURE, AND/OR EQUIPMENT ONLY: UNLESS SPECIFIC RESPONSIBILITY IS ALSO PROVIDED BY THE CONTRACTOR/SUBCONTRACTOR IN WRITTEN FORM.

29. THE GENERAL CONTRACTOR SHALL BE RESPONSIBLE FOR AND SHALL REMEDY ALL FAULTY, INFERIOR, AND/OR IMPROPER MATERIALS, DAMAGED GOODS, AND/OR FAULTY WORKMANSHIP FOR ONE (1) YEAR AFTER THE PROJECT IS COMPETE AND ACCEPTED UNDER THIS CONTRACT; UNLESS NOTED OTHERWISE IN THE CONTRACT BETWEEN THE OWNER AND THE CONTRACTOR. (EXCEPTION) THE ROOFING SUBCONTRACTOR SHALL FURNISH A MAINTENANCE AGREEMENT FOR ALL WORK DONE, COSIGNED BY THE GENERAL CONTRACTOR, TO MAINTAIN THE ROOFING IN A WATERTIGHT CONDITION FOR A PERIOD OF TWO (2) YEARS STARTING AFTER THE DATE OF SUBSTANTIAL COMPLETION OF THE PROJECT, UNLESS OTHERWISE WRITTEN IN THE CONTRACT BETWEEN THE OWNER AND THE CONTRACTOR.

30. THE CONTRACTOR SHALL PROVIDE ADEQUATE PROTECTION FOR THE SAFETY OF THE OWNER'S EMPLOYEES, WORKMEN, AND ALL TIMES DURING THE CONSTRUCTION OF THE PROJECT.

31. THE CONTRACTOR SHALL BE REQUIRED TO PAY FOR ALL NECESSARY PERMITS AND/OR FEES WITH RESPECT TO THE WORK TO COMPLETE THE PROJECT. BUILDING PERMIT APPLICATIONS SHALL BE FILED BY THE OWNER OR HIS REPRESENTATIVE. CONTRACTOR SHALL OBTAIN PERMIT AND MAKE FINAL PAYMENT FOR SAID DOCUMENT.

32. THE ARCHITECT/ENGINEER IN CHARGE SHALL SIGN AND SEAL ALL DRAWINGS AND/OR SPECIFICATIONS.

33. FIRE EXTINGUISHER REQUIREMENTS SHALL BE VERIFIED WITH THE LOCAL FIRE MARSHALL.

35. CONTRACTOR TO LOCATE ALL UTILITIES PRIOR TO PLACEMENT OF MONOPOLE FOOTING AND OTHER STRUCTURES TO BE PLACED IN GROUND. SEE GENERAL NOTE #6 ON THIS SHEET.

34. NOT USED

36. SEE CIVIL DRAWINGS FOR ADDITIONAL SITE INFORMATION.

37. ALL ANTENNAS MOUNTED ON ROOF SUPPORT FRAMES TO BE PROVIDED BY CARRIER COMMUNICATIONS.

GENERAL NOTES (CONTINUED) 3

1. PLANS ARE INTENDED TO BE A DIAGRAMMATIC OUTLINE ONLY, UNLESS NOTED OTHERWISE. THE WORK SHALL INCLUDE FURNISHING MATERIALS, EQUIPMENT, APPURTENANCES AND LABOR NECESSARY TO COMPLETE ALL INSTALLATIONS AS INDICATED ON THE DRAWINGS.

2. THE CONTRACTOR SHALL OBTAIN, IN WRITING, AUTHORIZATION TO PROCEED BEFORE STARTING WORK ON ANY ITEM NOT CLEARLY DEFINED OR IDENTIFIED BY THE CONTRACT DOCUMENTS.

3. NOT USED

4. THE CONTRACTOR SHALL INSTALL ALL EQUIPMENT AND MATERIALS IN ACCORDANCE WITH MANUFACTURER'S RECOMMENDATIONS UNLESS SPECIFICALLY INDICATED OTHERWISE, OR WHERE LOCAL CODES OR REGULATIONS TAKE PRECEDENCE.

5. ALL CONSTRUCTION SHALL BE IN ACCORDANCE WITH THE UBC'S REQUIREMENTS REGARDING EARTHQUAKE RESISTANCE, FOR, BUT NOT LIMITED TO, PIPING, LIGHT FIXTURES, CEILING GRID, INTERIOR PARTITIONS, AND MECHANICAL EQUIPMENT. ALL WORK MUST COMPLY WITH LOCAL EARTHQUAKE CODES AND REGULATIONS.

6. REPRESENTATIONS OF TRUE NORTH, OTHER THAN THOSE FOUND ON THE PLOT OF SURVEY DRAWING, SHALL NOT BE USED TO IDENTIFY OR ESTABLISH THE BEARING OF TRUE NORTH AT THE SITE. THE CONTRACTOR SHALL RELY SOLELY ON THE PLOT OF SURVEY DRAWING AND ANY SURVEYOR'S MARKINGS AT THE SITE FOR THE ESTABLISHMENT OF TRUE NORTH, AND SHALL NOTIFY THE ARCHITECT/ENGINEER PRIOR TO PROCEEDING WITH THE WORK IF ANY DISCREPANCY IS FOUND BETWEEN THE VARIOUS ELEMENTS OF THE WORKING DRAWINGS AND THE TRUE NORTH ORIENTATION AS DEPICTED ON THE CIVIL SURVEY. THE CONTRACTOR SHALL ASSUME SOLE LIABILITY FOR ANY FAILURE TO NOTIFY THE ARCHITECT/ENGINEER.

7. THE BUILDING DEPARTMENT ISSUING THE PERMITS SHALL BE NOTIFIED AT LEAST TWO WORKING DAYS PRIOR TO THE COMMENCEMENT OF WORK, OR AS OTHERWISE STIPULATED BY THE CODE ENFORCEMENT OFFICIAL HAVING JURISDICTION.

8. NOT USED.

9. ALL EXISTING UTILITIES, FACILITIES, CONDITIONS, AND THEIR DIMENSIONS SHOWN ON PLANS HAVE BEEN PLOTTED FROM AVAILABLE RECORDS. THE ARCHITECT/ENGINEER AND THE OWNER ASSUME NO RESPONSIBILITY WHATSOEVER AS TO THE SUFFICIENCY OR ACCURACY OF THE INFORMATION SHOWN ON THE PLANS, OR THE MANNER OF THEIR REMOVAL OR ADJUSTMENT. CONTRACTORS SHALL BE RESPONSIBLE FOR DETERMINING EXACT LOCATION OF ALL EXISTING UTILITIES AND FACILITIES PRIOR TO START OF CONSTRUCTION. CONTRACTORS SHALL ALSO OBTAIN FROM EACH UTILITY COMPANY DETAILED INFORMATION RELATIVE TO WORKING SCHEDULES AND METHODS OF REMOVING OR ADJUSTING EXISTING UTILITIES.

10. CONTRACTOR SHALL VERIFY ALL EXISTING UTILITIES, BOTH HORIZONTALLY AND VERTICALLY, PRIOR TO START OF CONSTRUCTION. ANY DISCREPANCIES OR DOUBTS AS TO THE INTERPRETATION OF PLANS SHOULD BE IMMEDIATELY REPORTED TO THE ARCHITECT/ENGINEER FOR RESOLUTION AND INSTRUCTION, AND NO FURTHER WORK SHALL BE PERFORMED UNTIL THE DISCREPANCY IS CHECKED AND CORRECTED BY THE ARCHITECT/ENGINEER. FAILURE TO SECURE SUCH INSTRUCTION MEANS CONTRACTOR WILL HAVE WORKED AT HIS/HER OWN RISK AND EXPENSE.

11. NOT USED.

12. ANY DRAIN AND/OR FIELD TILE ENCOUNTERED/DISTURBED DURING CONSTRUCTION SHALL BE RETURNED TO ITS ORIGINAL CONDITION PRIOR TO COMPLETION OF WORK. SIZE, LOCATION AND TYPE OF ANY UNDERGROUND UTILITIES OR IMPROVEMENTS SHALL BE ACCURATELY NOTED AND PLACED ON "AS-BUILT" DRAWINGS BY GENERAL CONTRACTOR, AND ISSUED TO ARCHITECT/ENGINEER AT COMPLETION OF PROJECT.

13. ALL TEMPORARY EXCAVATIONS FOR THE INSTALLATION OF FOUNDATIONS, UTILITIES, ETC., SHALL BE PROPERLY LAID BACK OR BRACED IN ACCORDANCE WITH CORRECT OCCUPATIONAL SAFETY AND HEALTH ADMINISTRATION (OSHA) REQUIREMENTS.

14. INCLUDE MISC. ITEMS PER T-MOBILE SPECIFICATIONS.

GENERAL CONSTRUCTION NOTES 4

NOT USED 5

ISSUE STATUS

△	DATE	DESCRIPTION	REV
	04/01/09	80% CD	0
	04/22/09	100% CD	1
	04/30/09	100% CD	2
	12/08/10	100% CD	3
	12/16/10	CD'S REVISED	4

SDG JOB NO. 250.115

SDG Architects, Inc.
Architecture / Planning
3361 Walnut Blvd. Ste. 120
Brentwood, CA 94513
(925) 634-7000
FAX: (925) 634-8020

STAMP

T-MOBILE WEST CORPORATION
1855 GATEWAY BLVD. 9TH FLOOR
CONCORD, CA. 94520

SHEPHERD CANYON
BA 02066A
5921 SHEPHERD CANYON RD.
OAKLAND, CA

SHEET TITLE:
GENERAL NOTES, LEGENDS, SPECIAL INSPECTIONS & ABBREVIATIONS

T-2

W:\PROJECTS\BA02066A - Shepherd Canyon\CD\BA02066A Shepherds Canyon 100CD_REV4.dwg, 12/29/2010 11:21:00 AM, swalker

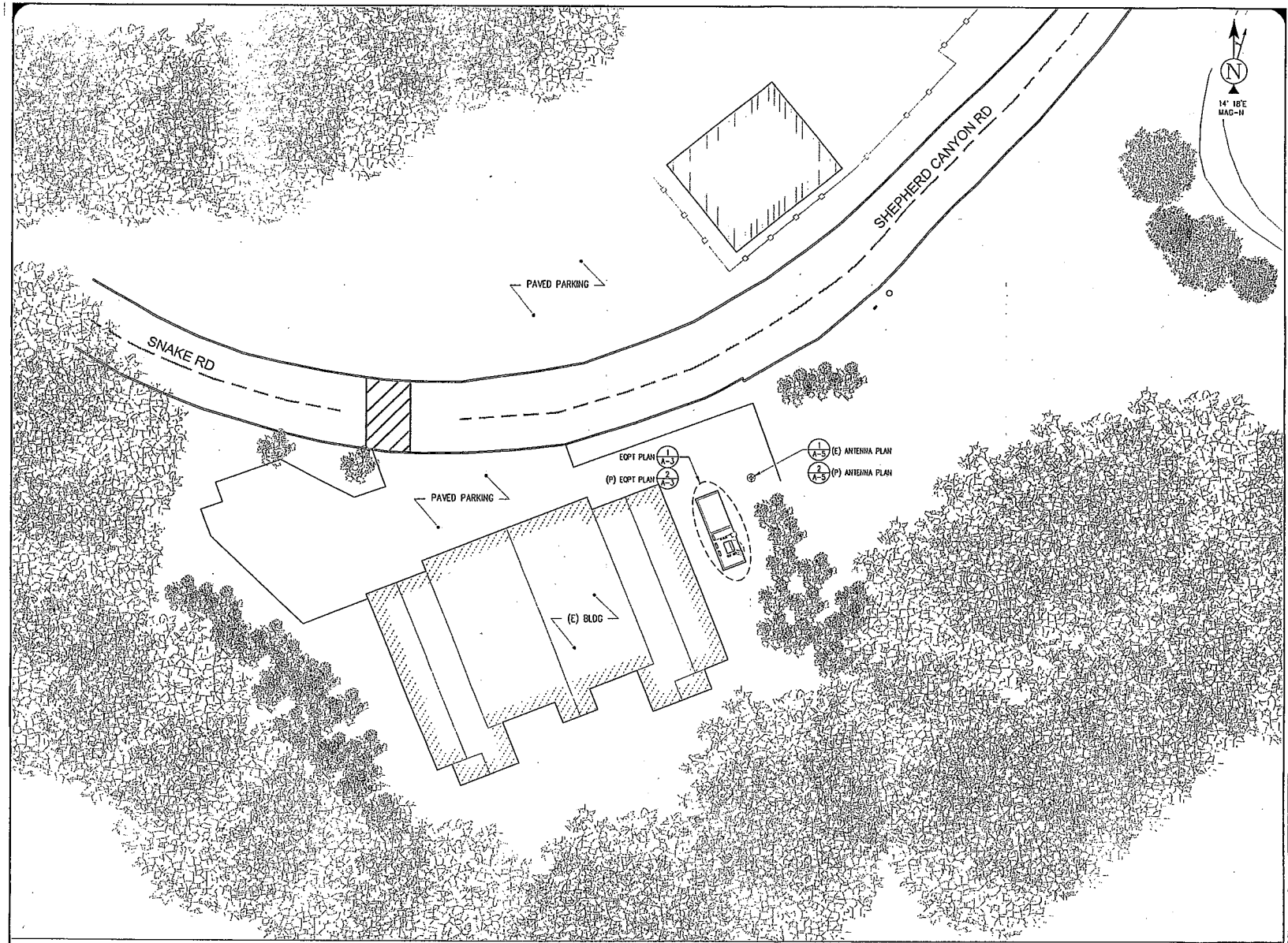

SITE PLAN

ISSUE STATUS

△	DATE	DESCRIPTION	REV
	04/01/09	80% CD	0
	04/22/09	100% CD	1
	04/30/09	100% CD	2
	12/08/10	100% CD	3
	12/16/10	CD'S REVISED	4

SDG JOB NO. 250.115

SDG Architects, Inc.
Architecture / Planning
3361 Walnut Blvd. Ste. 120
Brentwood, CA 94513
(925) 634-7000
FAX: (925) 634-8020

STAMP

T-MOBILE WEST CORPORATION
T-Mobile
1855 GATEWAY BLVD, 9TH FLOOR
CONCORD, CA. 94520

SHEPHERD CANYON
BA 02066A
5921 SHEPHERD CANYON RD.
OAKLAND, CA

SHEET TITLE:
SITE PLAN

A-1

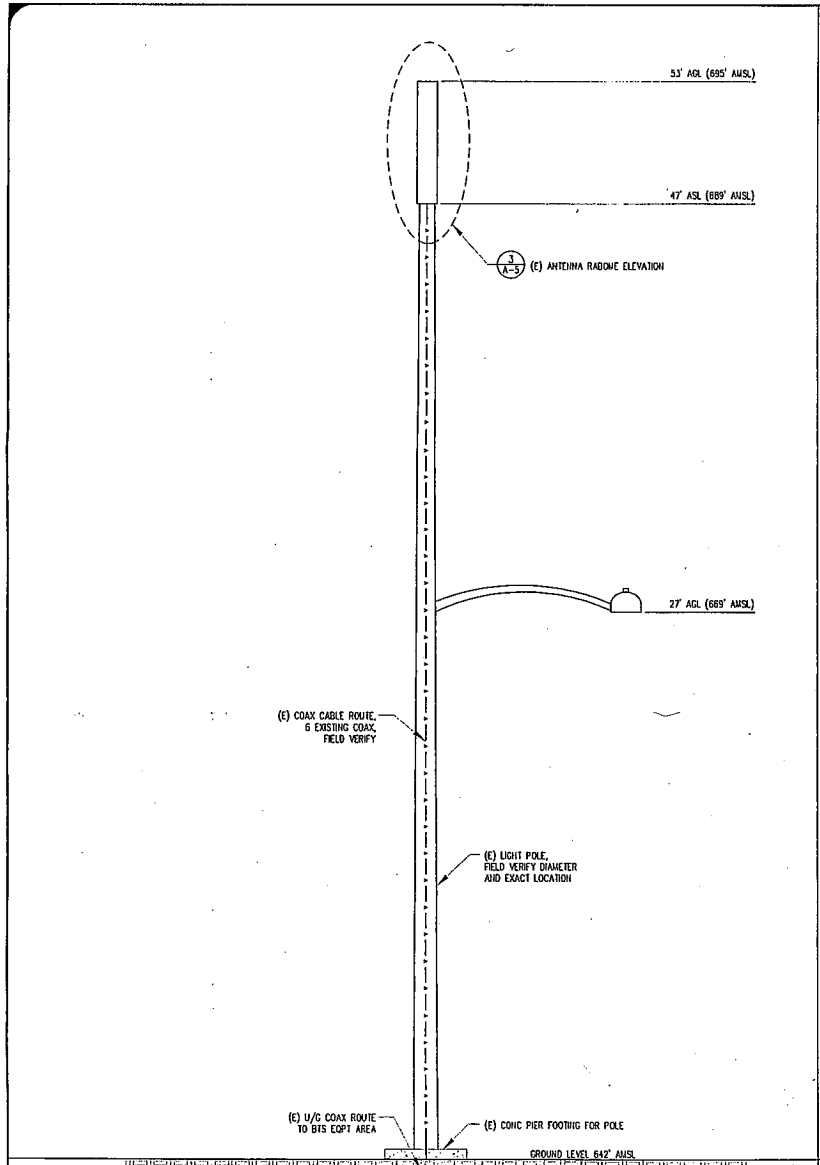

EXISTING SOUTHEAST SITE ELEVATION

SCALE 3/8"=1'-0" 1

NOTES: (UNLESS OTHERWISE SPECIFIED)

1. USE EXISTING COAX ROUTE FOR ANY ADDITIONAL CABLES REQUIRED BY RF ENGINEERING.
2. SOME LANDSCAPE AND EQUIPMENT NOT SHOWN FOR CLARITY.

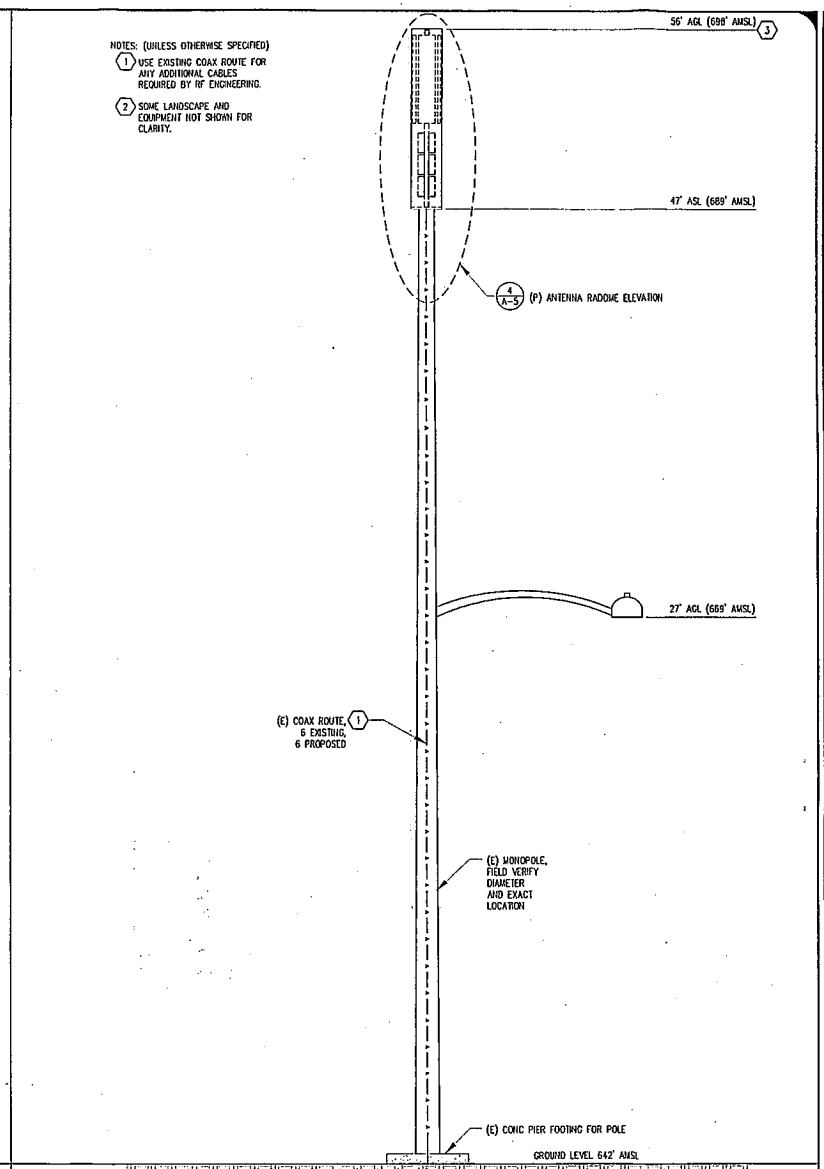

PROPOSED SOUTHEAST SITE ELEVATION

SCALE 3/8"=1'-0" 2

ISSUE STATUS

△	DATE	DESCRIPTION	REV
	04/01/09	80% CD	0
	04/22/09	100% CD	1
	04/30/09	100% CD	2
	12/08/10	100% CD	3
	12/15/10	CD'S REVISED	4

SDG JOB NO. 250.115

SDG Architects, Inc.
Architecture / Planning
3361 Walnut Blvd. Ste. 120
Brentwood, CA 94513
(925) 634-7000
FAX:-(925) 634-8020

STAMP

T-MOBILE WEST CORPORATION
T-Mobile
1855 GATEWAY BLVD, 9TH FLOOR
CONCORD, CA. 94520

SHEPHERD CANYON
BA 02066A
5921 SHEPHERD CANYON RD.
OAKLAND, CA

SHEET TITLE:
EXISTING AND PROPOSED SITE ELEVATIONS

A-2

W:\PROJECTS\BA\02066A - Shepherd Canyon\CD\BA02066A Shepherds Canyon 100CD_REV4.dwg, 12/29/2010 11:21:18 AM, swalker

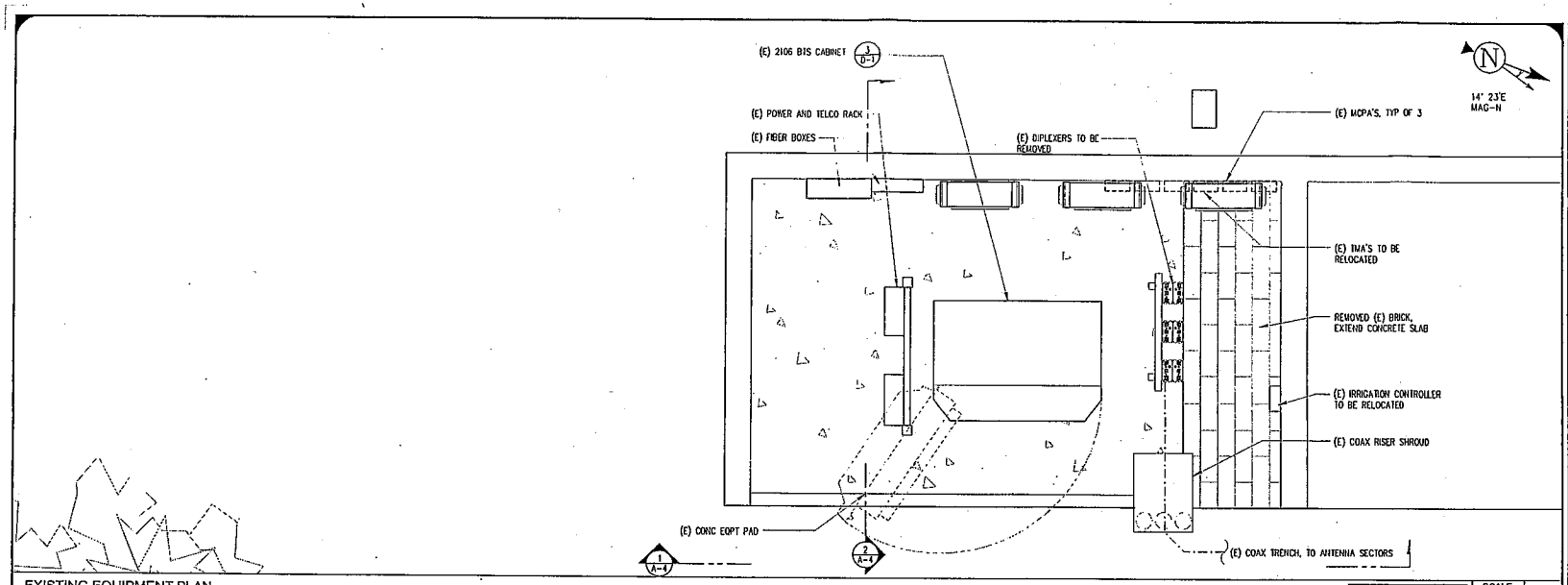

EXISTING EQUIPMENT PLAN

SCALE 3/4"=1'-0" 1

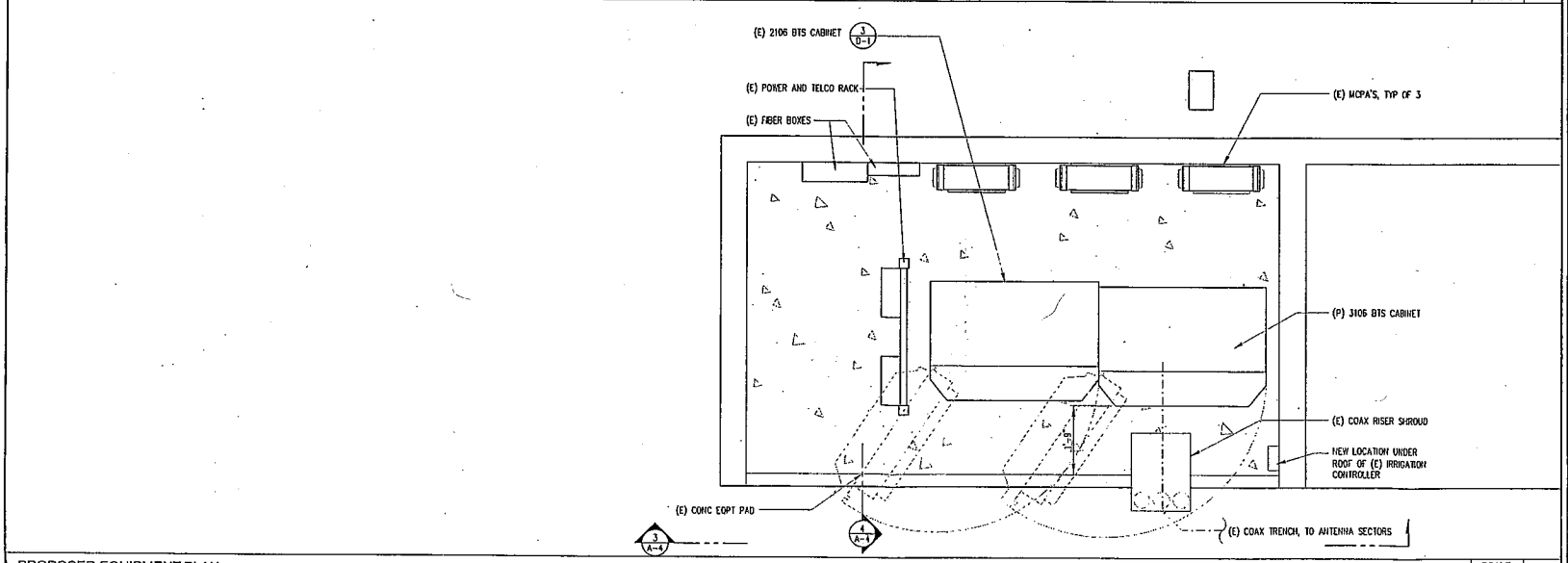

PROPOSED EQUIPMENT PLAN

SCALE 3/4"=1'-0" 2

ISSUE STATUS

△	DATE	DESCRIPTION	REV
	04/01/09	80% CD	0
	04/22/09	100% CD	1
	04/30/09	100% CD	2
	12/08/10	100% CD	3
	12/16/10	CD'S REVISED	4

SDG JOB NO. 250.115

SDG Architects, Inc.
Architecture / Planning
3361 Walnut Blvd. Ste. 120
Brentwood, CA 94513
(925) 634-7000
FAX: (925) 634-8020

STAMP

T-MOBILE WEST CORPORATION
T-Mobile
1855 GATEWAY BLVD, 9TH FLOOR
CONCORD, CA. 94520

SHEPHERD CANYON
BA 02066A
5921 SHEPHERD CANYON RD.
OAKLAND, CA

SHEET TITLE:
EXISTING AND PROPOSED EQUIPMENT PLANS

A-3

W:\PROJECTS\BA02066A - Shepherd Canyon\CD\BA02066A Shepherds Canyon 100CD_REV4.dwg, 12/29/2010 11:21:30 AM, swalker

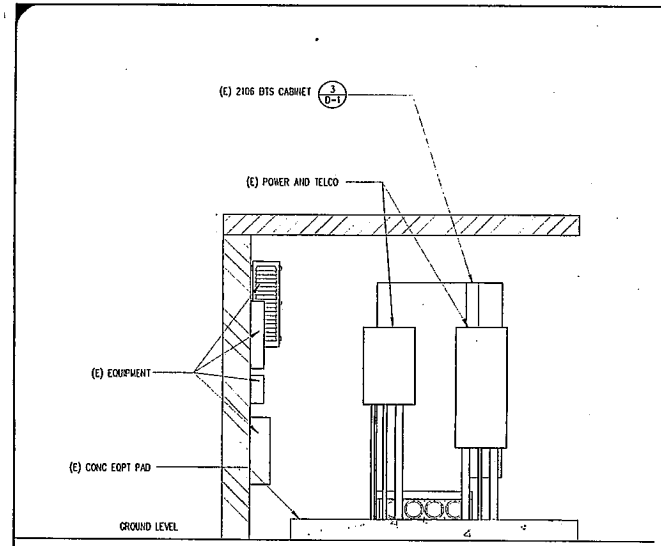

EXISTING EQUIPMENT ELEVATION — SCALE 3/4"=1'-0" — 2

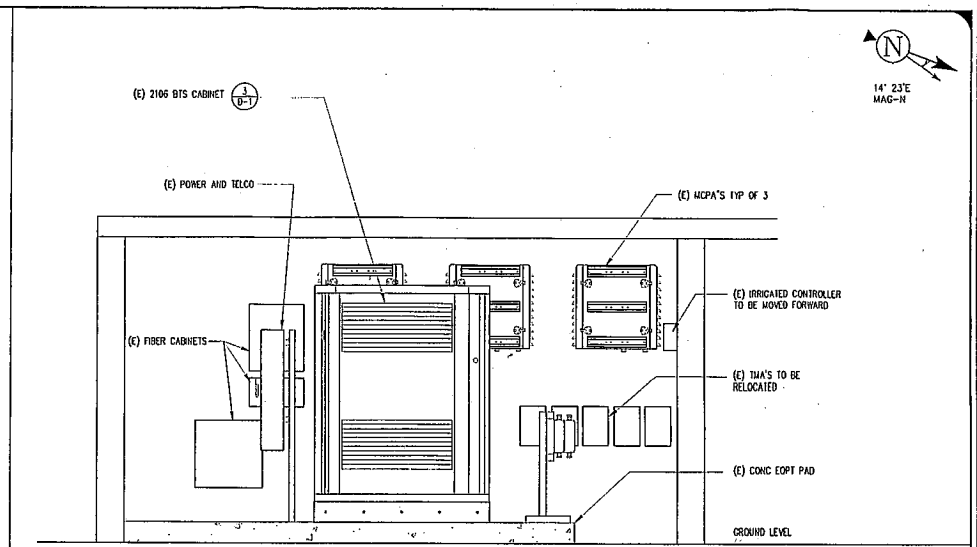

EXISTING EQUIPMENT ELEVATION — SCALE 3/4"=1'-0" — 1

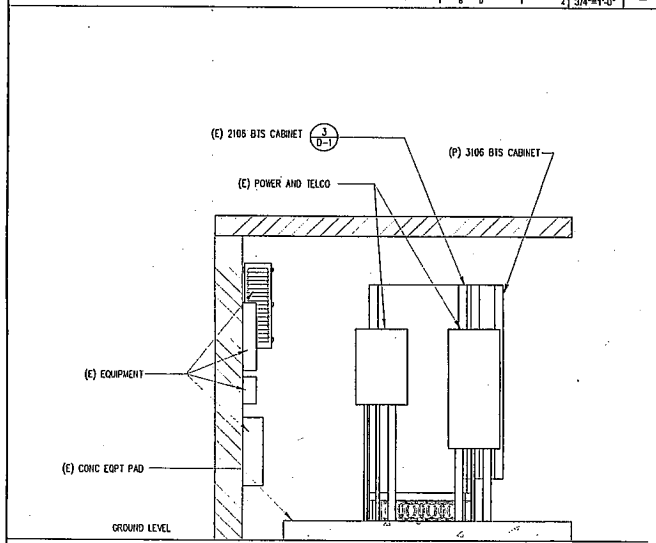

PROPOSED EQUIPMENT ELEVATION — SCALE 3/4"=1'-0" — 4

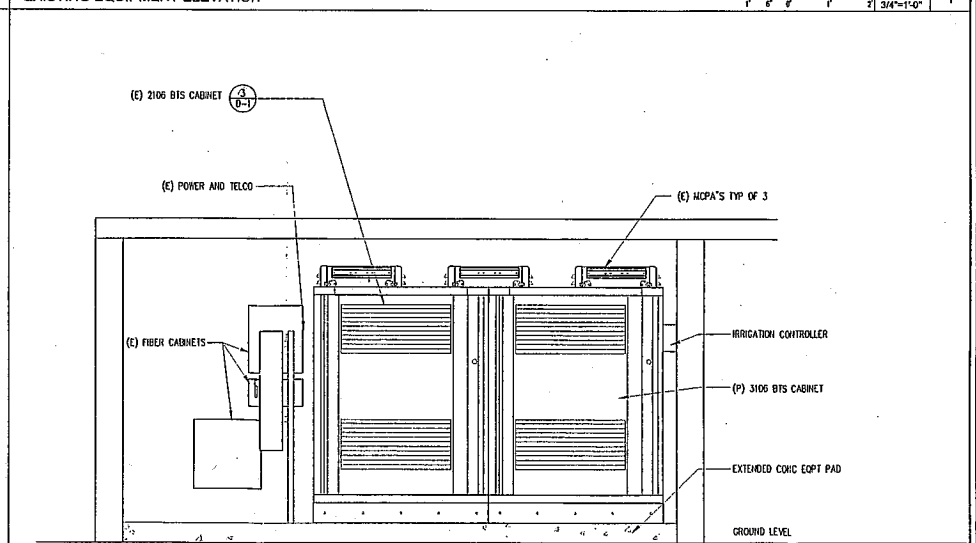

PROPOSED EQUIPMENT ELEVATION — SCALE 3/4"=1'-0" — 3

ISSUE STATUS

△	DATE	DESCRIPTION	REV
	04/01/09	80% CD	0
	04/22/09	100% CD	1
	04/30/09	100% CD	2
	12/08/10	100% CD	3
	12/16/10	CD'S REVISED	4

SDG JOB NO. 250.115

SDG Architects, Inc.
Architecture / Planning
3361 Walnut Blvd. Ste. 120
Brentwood, CA 94513
(925) 634-7000
FAX: (925) 634-8020

STAMP

T-MOBILE WEST CORPORATION
1855 GATEWAY BLVD, 9TH FLOOR
CONCORD, CA. 94520

SHEPHERD CANYON
BA 02066A
5921 SHEPHERD CANYON RD.
OAKLAND, CA

SHEET TITLE:
EXISTING AND PROPOSED EQUIPMENT ELEVATIONS

A-4

W:\PROJECTS\BA\02066A - Shepherd Canyon\CD\BA02066A Shepherds Canyon 100CD_REV4.dwg, 12/29/2010 11:21:51 AM, swalker

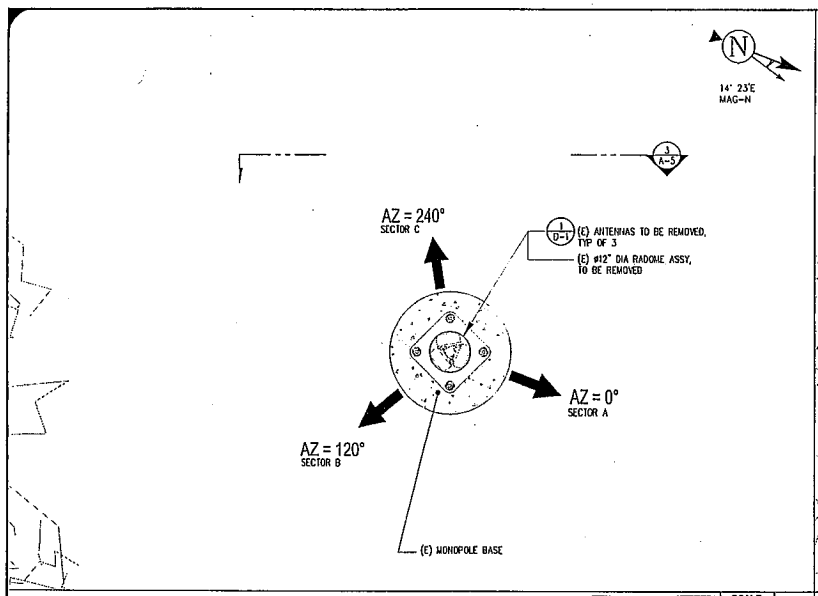

EXISTING ANTENNA PLAN — SCALE 3/4"=1'-0" — 1

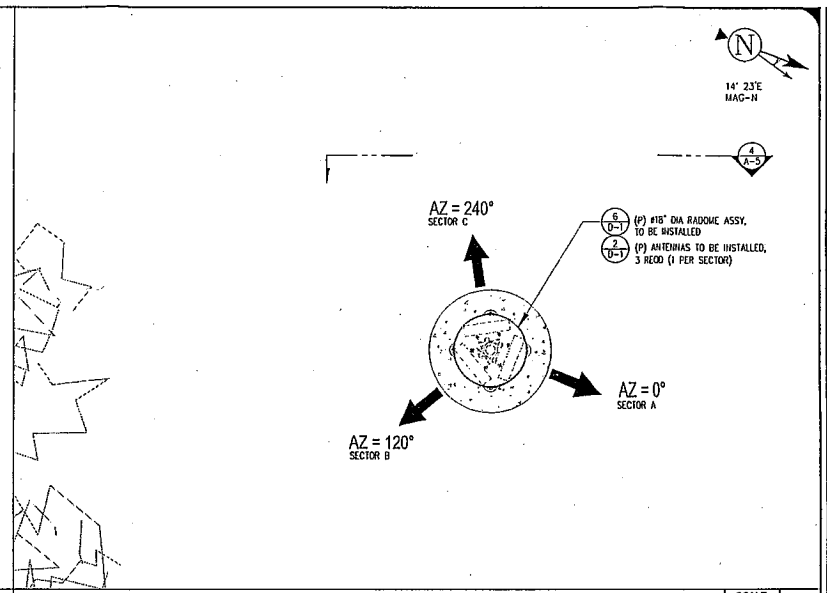

PROPOSED ANTENNA PLAN — SCALE 3/4"=1'-0" — 2

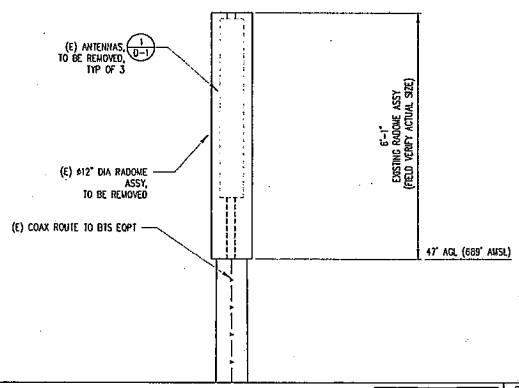

EXISTING ANTENNA ELEVATION — SCALE 3/4"=1'-0" — 3

NOTES: (UNLESS OTHERWISE SPECIFIED)

1. PROPOSED RADOME AND ANTENNAS TO BE PLACED AT 2'-11" HIGHER THAN THE ORIGINALS. THE PROPOSED RADOME SHALL BE PAINTED TO MATCH THE EXISTING RADOME.
2. FOR PROPOSED INTERCONNECTION DETAILS, SEE RF ENGINEERING SHEETS.
3. USE EXISTING COAX ROUTE FOR ANY ADDITIONAL CABLES REQUIRED BY RF ENGINEERING.

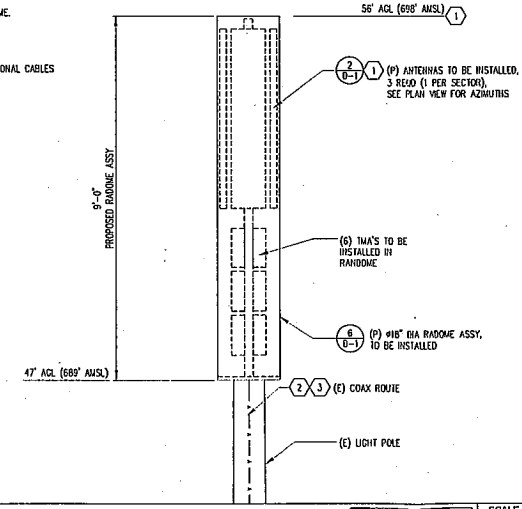

PROPOSED ANTENNA ELEVATIONS — SCALE 3/4"=1'-0" — 4

ISSUE STATUS

△	DATE	DESCRIPTION	REV
	04/01/09	80% CD	0
	04/22/09	100% CD	1
	04/30/09	100% CD	2
	12/08/10	100% CD	3
	12/16/10	CD'S REVISED	4

SDG JOB NO. 250.115

SDG Architects, Inc.
Architecture / Planning
3361 Walnut Blvd. Ste. 120
Brentwood, CA 94513
(925) 634-7000
FAX: (925) 634-8020

STAMP

T-MOBILE WEST CORPORATION
T-Mobile
1855 GATEWAY BLVD. 9TH FLOOR
CONCORD, CA. 94520

SHEPHERD CANYON
BA 02066A
5921 SHEPHERD CANYON RD.
OAKLAND, CA.

SHEET TITLE:
EXISTING AND PROPOSED ANTENNA PLANS & ELEVATIONS

A-5

W:\PROJECTS\BA02066A - Shepherd Canyon\CD\BA02066A Shepherds Canyon 100CD_REV4.dwg, 12/29/2010 11:22:12 AM, swalker

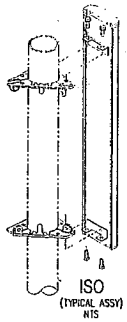

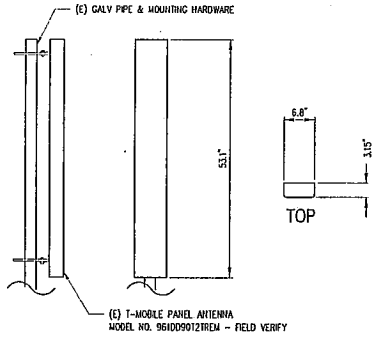

EXISTING ANTENNAS (TO BE REMOVED) | SCALE 1"=1'-0" | 1

NOTES: (UNLESS OTHERWISE SPECIFIED)

1. PAINT RF SCREEN TO MATCH EXISTING MONOPOLE AS REQUIRED.
2. RADOME AND ANTENNAS ARE A COMPLETE MFR ASSEMBLY. THE DIMENSIONS ARE 18" DIA X 9FT. (MODEL/ CSHXX-6516-R2-TAD).
3. CONSULT CONSTRUCTION MANAGER FOR ACTUAL SCREEN AND MOUNTING HARDWARE TO BE USED.
4. ALL PROPOSED ANTENNAS SHALL BE GROUNDED PER MFR SPECIFICATIONS.

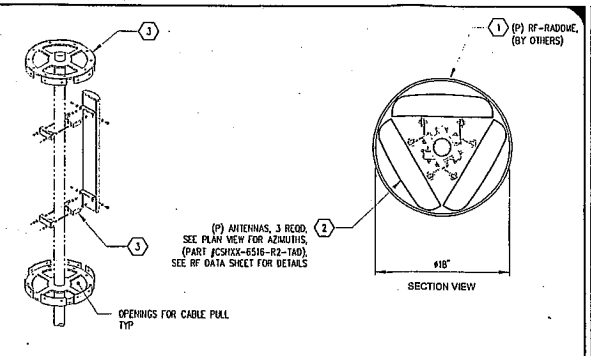

PROPOSED ANTENNA ASSEMBLY (CSHXX-6516-R2-TAD, 9' X Ø18") | SCALE NTS | 2

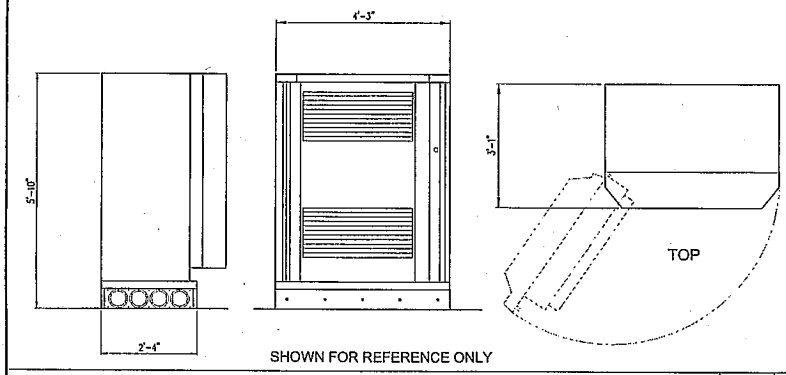

EXISTING BTS CABINET | SCALE 3/4"=1'-0" | 3

NOTES: (UNLESS OTHERWISE SPECIFIED)

1. REMOVE EXISTING 6'-1" RF SCREEN AND RADOME ASSEMBLY, AND REPLACE WITH NEW 9'-0" RF SCREEN AND ASSEMBLY AS SHOWN. (RF SCREEN BY OTHERS)
2. FASTEN PROPOSED RF SCREEN IN SIMILAR FASHION AS THE EXISTING RF SCREEN USING SIMILAR HARDWARE AND DESIGN. CONSTRUCTION MANAGER TO FIELD VERIFY FASTENING METHOD USED.
3. PAINT PROPOSED SCREEN TO MATCH EXISTING POLE.
4. CONSULT CONSTRUCTION MANAGER FOR ACTUAL SCREEN AND ANTENNA MOUNTING HARDWARE TO BE USED.

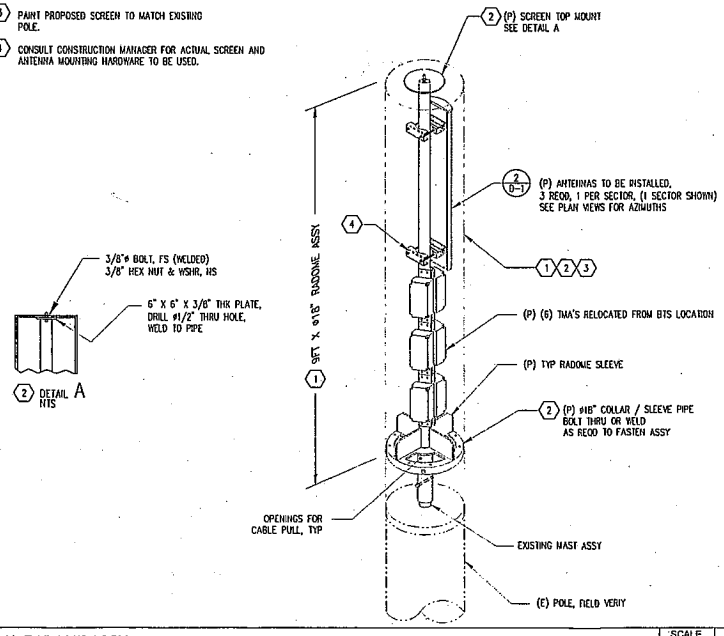

TYPICAL RADOME ASSY | SCALE NTS | 6

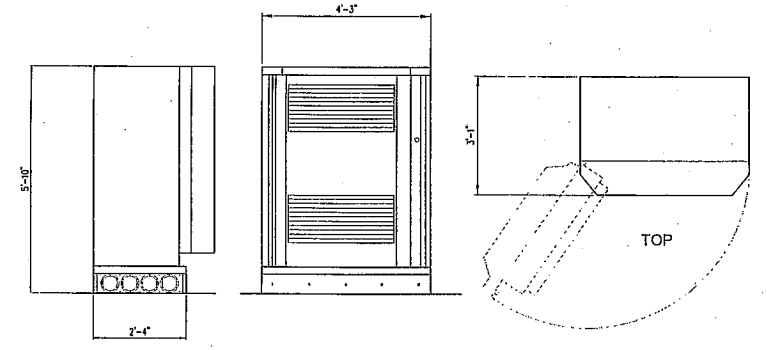

PROPOSED 3106 BTS CABINET | SCALE NTS | 5

ISSUE STATUS

△	DATE	DESCRIPTION	REV
	04/01/09	80% CD	0
	04/22/09	100% CD	1
	04/30/09	100% CD	2
	12/08/10	100% CD	3
	12/16/10	CD'S REVISED	4

SDG JOB NO. 250.115

SDG Architects, Inc.
Architecture / Planning
3361 Walnut Blvd. Ste. 120
Brentwood, CA 94513
(925) 634-7000
FAX: (925) 634-8020

STAMP

T-MOBILE WEST CORPORATION
T-Mobile
1855 GATEWAY BLVD, 9TH FLOOR
CONCORD, CA. 94520

SHEPHERD CANYON
BA 02066A
5921 SHEPHERD CANYON RD.
OAKLAND, CA

SHEET TITLE:
DETAIL SHEET

D-1

W:\PROJECTS\BA02066A - Shepherd Canyon\CD\BA02066A Shepherds Canyon 100CD_REV4.dwg, 12/29/2010 11:22:37 AM, swalker

ASCE	AMERICAN SOCIETY OF CIVIL ENGINEERS
ASTM	AMERICAN STANDARD TESTING MATERIALS
BOCA	BUILDING OFFICIALS AND CODE ASSOCIATION
BPG	BUILDING PRINCIPAL GROUND CONDUIT CONDUIT
ICBO	INTERNATIONAL CONFERENCE OF BUILDING OFFICIALS
GND	GROUND
EGB	EXTERNAL GROUND BUS
MGB	MASTER GROUND BUS
NEBS	NETWORK EQUIPMENT-BUILDING SYSTEM
NEC	NATIONAL ELECTRIC CODE
NEMA	NATIONAL ELECTRICAL MANUFACTURERS ASSOCIATION
UBC	UNIFORM BUILDING CODE
WP	WEATHER PROOF.

A	FLUORESCENT FIXTURE AND OUTLET. TYPE AS INDICATED IN DUPLEX RECEPTACLE OUTLET. FLUSH IN CEILING.
A	FIXTURES WITH SHADING SHALL BE CONNECTED TO EMERGENCY POWER SOURCE. LIGHTALARMS #AN12, 1100 LUMEN OUTPUT BATTERY PACK OR APPROVED EQUAL.
	OUTLET BOX WITH FLEXIBLE CONDUIT CONNECTION TO FIXTURE.
	EMERGENCY LIGHTING FIXTURE. TYPE AS INDICATED IN FIXTURE SCHEDULE.
	SAFETY SWITCH WITH NUMBER OF POLES AND RATING AS REQUIRED. NEMA-3R ENCLOSURE IF LOCATED OUTDOORS.
	FUSIBLE SAFETY SWITCH WITH NUMBER OF POLES AND RATING AS REQUIRED. NEMA-3R ENCLOSURE IF LOCATED OUTDOORS. PROVIDE FUSES SIZED AT 125% OF FLA UON
J	JUNCTION BOX
J	JUNCTION BOX
E	ELECTRIC BOX
T	TELEPHONE BOX
P	PULL BOX
	#5/8" X 10'-0" COPPER , OR COPPER CLAD STEEL, GROUND ROD, PLACED EVERY 10'-0" OC (MAX)
	GROUND ROD INSPECTION WELL
S/N	SOLID NEUTRAL TERMINAL BUS
#A	PHASE A TERMINAL LUG
GND	GROUND TERMINAL BUS
KS	KEY OPERATED DISCONNECT SWITCH, 120V
WP	TWIST LOCK MALE RECEPTACLE, 30A, 120-240V NEMA L-14 IN WEATHER PROOF BOX AND COVER
GFI WP	DUPLEX RECEPTACLE W/ GROUND FAULT, 120V, 2P, 3W
WP	LIGHT FIXTURE, WEATHER PROOF
	MANUAL TRANSFER SWITCH
	CONNECTION TO GROUNDING ELECTRODE SYSTEM
	FUSES
	CIRCUIT BREAKER.
	TRANSFORMER (AIR CORE)
	TRANSFORMER (IRON CORE)
	RELAY OR CONTACTOR COIL.
	NORMALLY OPEN CONTACTS.
	NORMALLY CLOSED CONTACTS.
	CONCEALED RACEWAY IN WALLS OR CEILING WITH NEUTRAL, HOT, SWITCHED AND GROUND CONDUCTORS RESPECTIVELY.
A-1,3	HOMERUN TO PANELBOARD WITH CIRCUIT NUMBERS AS INDICATED.
	CONDUIT STUBBED AND CAPPED OR BUSHED.
	CONDUIT STUB UP / DOWN
C	CONDUIT
E	ELECTRICAL CONDUIT
E/G	GROUND CABLE
T	TELEPHONE CONDUIT, MINIMUM 3/4" W/PULL STRING.

ELECTRICAL SYMBOLS & ABBREVIATIONS — SCALE NTS — 1

GENERAL NOTES:

1. CODES AND REGULATIONS: THE NATIONAL ELECTRICAL CODE AND APPLICABLE FEDERAL, STATE, COUNTY, AND MUNICIPAL BUILDING CODES, ORDINANCES, RULES AND REGULATIONS OF AUTHORITIES HAVING JURISDICTION OVER THE CONSTRUCTION OF THIS PROJECT, SHALL APPLY THROUGHOUT.
2. PERMITS, FEES AND INSPECTIONS: ARRANGE AND PAY FOR REQUIRED ELECTRICAL BUILDING PERMITS, FEES AND INSPECTIONS.
3. GUARANTEES: INSTALLATION SHALL BE GUARANTEED FOR A PERIOD OF ONE YEAR FROM THE DATE OF FINAL ACCEPTANCE. DEFECTIVE MATERIAL, EQUIPMENT OR INFERIOR WORKMANSHIP SHALL BE CORRECTED IMMEDIATELY TO THE SATISFACTION OF T-MOBILE. IF, AFTER THIRTY (30) DAYS THE CORRECTIONS ARE NOT COMPLETE THE OWNER RESERVES THE OPTION OF ARRANGING FOR THE NECESSARY REPAIRS AND BACKCHARGING THE ORIGINAL CONTRACTOR FOR THE WORK.
4. CHANGES: NO ADDITIONAL COSTS FOR LABOR OR MATERIALS WILL BE ALLOWED FOR CHANGES OR MODIFICATIONS MADE UNLESS PRIOR WRITTEN APPROVAL IS OBTAINED FROM THE ARCHITECT, ENGINEER OR OWNER IN THE FORM OF A CHANGE ORDER.
5. PROJECT WORK: TO INCLUDE THE FURNISHING OF LABOR, TOOLS, EQUIPMENT AND MATERIALS AS REQUIRED TO INSTALL COMPLETE AND IN OPERATING CONDITION, THE ELECTRICAL SYSTEM SHOWN OR IMPLIED ON THESE DRAWINGS.
6. DRAWINGS: ELECTRICAL DRAWINGS ARE DIAGRAMMATIC IN NATURE AND ARE NOT TO BE SCALED, CONDUIT ROUTING IS SHOWN AS A GUIDE ONLY. ACTUAL CONDUIT PLACEMENT IS TO BE DONE IN A PROFESSIONAL MANNER.
7. DISCREPANCIES: DISCREPANCIES ON THESE PLANS, SPECIFICATIONS, ETC. MUST BE IMMEDIATELY BROUGHT TO THE ATTENTION OF THE ENGINEER.
8. SURVEY AND CONDITIONS: VISIT THE JOB SITE PRIOR TO SUBMITTING BID, AND MAKE A SURVEY OF EXISTING CONDITIONS WHICH MAY EFFECT THE WORK TO BE PERFORMED , NO OTHER ALLOWANCES WILL BE GIVEN FOR THE SITE CONDITION.
9. CO-OPERATION: CO-OPERATE WITH OTHER CONTRACTORS AND SUBCONTRACTORS ON SITE, ARRANGE AND EXECUTE WORK IN SUCH A MANNER AS REQUIRED FOR THE SATISFACTORY AND EFFICIENT CONSTRUCTION OF THIS PROJECT BY ALL TRADES CONCERNED.
10. TEST AND REPORTS: GROUNDING SHALL BE TESTED AND TEST REPORT SHALL BE PROVIDED TO THE T-MOBILE PROJECT MANAGER FOR APPROVAL BEFORE FINAL ACCEPTANCE.
11. BROCHURES AND MANUALS: BROCHURES AND OPERATING MANUALS SHALL BE TURNED OVER TO THE T-MOBILE PROJECT MANAGER ON SITE.
12. TEMPORARY POWER: ARRANGE AND PAY FOR TEMPORARY POWER DURING CONSTRUCTION.
13. SHOP DRAWINGS: SUBMIT SHOP DRAWINGS AS REQUIRED BY T-MOBILE PROJECT MANAGER.

MATERIALS:

14. MATERIALS AND WORKMANSHIP: PROVIDE MATERIALS NEW AND OF SPECIFICATION GRADE WITH U.L. LABELS. WORKMANSHIP SHALL BE IN ACCORDANCE WITH THE BEST PRACTICES OF THE TRADE INSTALLED BY JOURNEYMAN ELECTRICIANS UNDER THE DIRECT SUPERVISION OF A COMPETENT FOREMAN.
15. CONDUIT SYSTEM: RIGID STEEL, HEAVY-WALL CONDUIT, INCLUDING COUPLING, LOCK-NUTS, BUSHINGS, NIPPLES AND OTHER FITTINGS SHALL BE HOT DIPPED GALVANIZED, SHERARDIZED, OR ZINC COATED. ELECTRICAL METALLIC TUBING (EMT), INCLUDING COUPLINGS, CONNECTORS AND OTHER FITTINGS SHALL BE GALVANIZED OR SHERARDIZED, FITTINGS FOR THE EMT SHALL BE OF THE COMPRESSION TYPE. NO CRIMP OR SET SCREW TYPE SHALL BE ALLOWED. CONDUIT INSTALLED FOR FUTURE USE SHALL BE INSTALLED WITH A PULL WIRE.

CONDUIT SHALL BE AS FOLLOWS:

A. CONDUIT SHALL BE SURFACE MOUNTED UNLESS OTHERWISE NOTED. NO HORIZONTAL CONDUITS SHALL BE PERMITTED BELOW 7'-6" AFF.
B. RIGID GALVANIZED STEEL IN EXPOSED AREAS SUBJECT TO WEATHER OR PHYSICAL DAMAGE.
C. ELECTRICAL METALLIC TUBING (EMT) INDOORS.
D. LIQUID TIGHT FLEX FOR WEATHERPROOF CONNECTORS TO EQUIPMENT.
E. UNDERGROUND CONDUITS SHALL BE SCHEDULE 40 PVC WITH RIGID GALVANIZED STEEL BENDS, AND RISERS. PVC CONDUITS SHALL CONTAIN A GROUND WIRE PER NEC TABLE 250-94
I. UTILITY BENDS MAY BE PER LOCAL UTILITY RECOMMENDATIONS.

16. JUNCTION BOXES: JUNCTION BOXES SHALL BE GALVANIZED OR SHERARDIZED. ONE PIECE PRESSED STEEL, KNOCK OUT TYPE. MINIMUM SIZE SHALL 4" SQUARE BY 1-1/4" DEEP. BOXES SHALL HAVE PLASTER RINGS AND EXTENSIONS AS REQUIRED.
17. WIRE: MINIMUM #12 CONDUIT EXCEPT WHERE OTHER SIZES ARE SPECIFICALLY INDICATED. THE NUMBER OF WIRES IN A CONDUIT ARE INDICATED BY MEANS OF CROSS MARKS (NEUTRAL BEING LONGER) WHERE THREE OR MORE WIRES ARE NECESSARY. REFER TO NEC TABLE 3B FOR CONDUIT FILL REQUIREMENTS WHERE LARGER THAN 1/2" CONDUIT IS REQUIRED FOR THE NUMBER OF WIRES INDICATED.
WIRE SHALL BE AS FOLLOWS;
CONDUCTORS SHALL BE STRANDED COPPER, WITH THHN OR THW AWG. INSULATION.
NO BX, MC OR ROMEX CABLE SHALL BE PERMITTED.
18. SERVICE EQUIPMENT: VERIFY WITH THE SERVING UTILITY THAT THE SERVICE EQUIPMENT PROPOSED MEETS THEIR REQUIREMENTS AND IS RATED FOR THE MAXIMUM SHORT CIRCUIT DUTY AVAILABLE, AND SUBMIT SHOP DRAWINGS IF REQUESTED. EQUIPMENT MAY BE SERIES RATED PER MANUFACTURER'S RECOMMENDATIONS, AND RESPONSIBILITY.

GENERAL ELECTRICAL NOTES — SCALE NTS — 2

EXECUTION:

19. ACCEPTANCE: BEFORE ACCEPTANCE OF THE WORK, INSPECT THE BUILDING IN THE PRESENCE OF THE OWNER AND DEMONSTRATE THAT ELECTRICAL SYSTEMS ARE IN OPERATING CONDITION SATISFACTORY TO THE OWNER.
20. CUTTING AND PATCHING: CUTTING AND PATCHING OF CONSTRUCTION REQUIRED FOR PROPER INSTALLATION OF HIS WORK IS THE RESPONSIBILITY OF THIS CONTRACTOR. NO CUTTING OF STRUCTURAL MEMBERS SHALL BE DONE WITHOUT THE APPROVAL OF THE STRUCTURAL ENGINEER.
21. LOCATION AND ARRANGEMENTS: DRAWINGS INDICATE DIAGRAMMATICALLY, THE DESIRED LOCATION OF EQUIPMENT, FIXTURES, OUTLETS, ETC. AND ARE NOT TO BE SCALED, PROPER JUDGEMENT MUST BE EXERCISED IN THE EXECUTION TO INSURE THE BEST POSSIBLE INSTALLATION.
22. DEVICE ARRANGEMENT: DEVICES MOUNTED ON OPPOSITE SIDES OF A COMMON WALL SHALL NOT BE MOUNTED BACK TO BACK AND SHALL BE SEPARATED BY A ONE STUD MINIMUM.
23. PANEL AND DISTRIBUTION BOARD IDENTIFICATION: SWITCHBOARDS, PANELBOARDS, TRANSFORMERS AND DISTRIBUTION SECTIONS SHALL BE IDENTIFIED WITH ENGRAVED WHITE ON BLACK LAMINATED RIGID PHENOLIC NAMEPLATES WITH 1/4" CHARACTERS, SECURELY AFFIXED TO FACE OF CABINET.
24. EXTERIOR EQUIPMENT: LOCATION OF EQUIPMENT SHALL BE FIELD VERIFIED.
25. EQUIPMENT LOCATIONS: LOCATION OF EQUIPMENT SHALL BE FIELD VERIFIED.
26. GROUNDING: GROUNDING OF THE ELECTRICAL EQUIPMENT AND SYSTEM SHALL BE IN ACCORDANCE WITH ARTICLE 250 OF THE NATIONAL ELECTRICAL CODE AND LOCAL CODES OR ORDINANCES.
27. T-MOBILE STANDARDS: INSTALLATION SHALL COMPLY SPECIFICALLY WITH T-MOBILE ENGINEERING STANDARDS MANUAL. ANY DEVIATIONS SHALL BE BROUGHT TO THE ATTENTION ON THE T-MOBILE PROJECT MANAGER PRIOR TO COMMENCEMENT OF WORK.
28. PROCUREMENT VERIFICATION: PROVIDE AN ITEMIZED CERTIFICATION TO THE T-MOBILE PROJECT MANAGER THAT EQUIPMENT AND RELATED HARDWARE HAVE BEEN ORDERED WITHIN 24 HOURS OF T-MOBILE NOTICE TO PROCEED.

NOTES:

1. PROPOSED BTS EQUIPMENT CABINET ON MFR BASE, FASTENED TO CONCRETE PAD PER MFR SPECS.
2. CONTRACTOR SHALL VERIFY CONDUIT STUB LAYOUT BELOW BTS EQUIPMENT WITH EACH CONSTRUCTION MANAGER PRIOR TO INSTALLATION.
3. #2" SCHEDULE RIGID TELEPHONE SERVICE CONDUIT W/ 3/8" PULL STRING.
4. #1" ELEC BRANCH CIRCUIT TO EQUIPMENT.
5. 4" SCHEDULE RIGID TELEPHONE SERVICE CONDUIT W/ 3/8" PULL STRING.
6. ELEC SERVICE FEEDER FROM POWER POC.

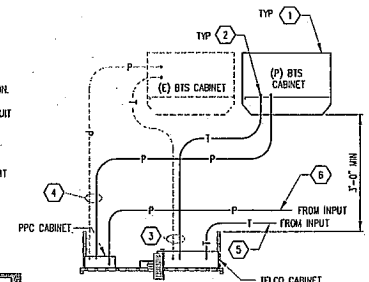

TYPICAL SCHEMATIC DIAGRAM ONLY

— T — T —	(P) TELEPHONE CONDUIT
— P — P —	(P) POWER CONDUIT
-- T ---- T ---- T --	(E) TELEPHONE CONDUIT
-- P ---- P ---- P --	(E) POWER CONDUIT

TYPICAL BTS CONDUIT SCHEMATIC DIAGRAM — SCALE NTS — 3

ISSUE STATUS

Δ	DATE	DESCRIPTION	REV
	04/01/09	80% CD	0
	04/22/09	100% CD	1
	04/30/09	100% CD	2
	12/08/10	100% CD	3
	12/16/10	CD'S REVISED	4

SDG JOB NO. 250.115

SDG Architects, Inc.
Architecture / Planning
3361 Walnut Blvd. Ste. 120
Brentwood, CA 94513
(925) 634-7000
FAX: (925) 634-8020

STAMP

T-MOBILE WEST CORPORATION
T-Mobile
1855 GATEWAY BLVD, 9TH FLOOR
CONCORD, CA. 94520

SHEPHERD CANYON
BA 02066A
5921 SHEPHERD CANYON RD.
OAKLAND, CA

SHEET TITLE:
GENERAL ELECTRICAL NOTES
ABBREVIATIONS AND LABELS

E-1

W:\PROJECTS\BA02066A - Shepherd Canyon\CD\BA02066A Shepherds Canyon 100CD_REV4.dwg, 12/29/2010 11:22:41 AM, swalker

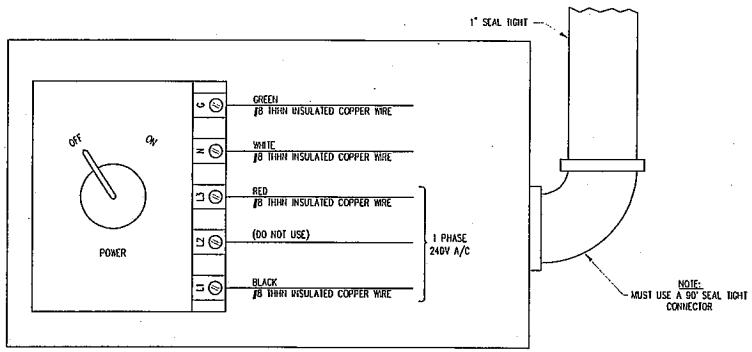

TYPICAL ERICSSON 2106, 2102 & 2101 BTS

1 PHASE 240V A/C 2106 BTS TERMINATION SCHEMATIC

SCALE NTS | 1

PANEL SCHEDULE

DESCRIPTION	CB SIZE	CB#	L1 LOAD	L2 LOAD	CB#	CB SIZE	DESCRIPTION
OUTDOOR BTS NO.1	40 A / 2P	1	5540 (VA)	5540 (VA)	2	40 A / 2P	OUTDOOR BTS NO.2
		3		600 (VA)	4	20 A / 1P	LIGHT FIXTURE
				200 (VA)	6	20 A / 1P	GFI RECEPTACLE
		5					
	L1 TOTAL		5540 (VA)	6340 (VA)		L2 TOTAL	
PANEL "PP" – 120/240 V SINGLE PHASE 3 WIRE				TOTAL CONNECTED LOAD: TBD			

NOTES: (UNLESS OTHERWISE NOTES)

1. UTILITY POINTS OF SERVICE AND WORK / MATERIALS SHOWN ARE BASED UPON PRELIMINARY INFORMATION PROVIDED BY THE UTILITY COMPANIES AND ARE FOR BID PURPOSES ONLY.
2. CONTRACTOR SHALL COORDINATE WITH UTILITY COMPANY FOR FINAL AND EXACT WORK / MATERIALS REQUIREMENTS AND CONSTRUCT TO UTILITY COMPANY ENGINEERING PLANS AND SPECIFICATIONS ONLY. CONTRACTOR SHALL FURNISH AND INSTALL ALL CONDUIT, PULL ROPES, CABLES, PULL BOXES, CONCRETE ENCASEMENT OF CONDUIT (IF REQUIRED), TRANSFORMER PAD, BARRIERS, POLE RISERS, TRENCHING, BACKFILL, PAY ALL UTILITY COMPANY FEES AND INCLUDE ALL REQUIREMENTS IN SCOPE OF WORK.
3. PROVIDE A MIN. OF 36 INCHES WORK CLEARANCE IN FRONT OF PANELS AND SERVICE EQUIPMENT.
4. ALL WIRING SHALL BE COPPER RATED FOR 75° C.
5. CONDUIT REQUIREMENTS (TYP. U.N.O.)
   UNDERGROUND: PVC (SCHED. 40 OR 80)
   INDOOR: EMT (RGS IN TRAFFIC AREA)
   OUTDOOR: (ABOVE GRADE) RGS
   (ADJUST CONDUIT FILL FOR SCHEDULE 80 PVC CONDUITS)
6. DISCONNECT THE FACTORY MAIN BONDING JUMPER BETWEEN THE NEUTRAL AND THE GROUND BUS IN THE PPC. PROVIDE NEUTRAL TO GROUND BONDING AT THE SERVICE METER. PROVIDE GROUNDING ELECTRODE CONNECTION TO 3/4 X 10' GROUND ROD.
7. ALL WIRING IS THHN / THWN COPPER STRANDED WIRE UNLESS OTHERWISE NOTED.
8. ELECTRICAL SERVICE COMBINATION METERING AND MAIN DISCONNECTED. 100 AMP. 120 / 240 VOLTS, 1 PHASE, 3 WIRE COMMERCIAL METER.
9. THE DESIGN PROFESSIONAL HAS PERFORMED ALL THE REQUIRED VOLTAGE DROP CALCULATIONS FOR ALL BRANCH CIRCUITS AND FEEDERS PER 2002 NATIONAL ELECTRICAL CODE ARTICLE 210.19

POWER SUBPANEL SCHEDULE

SCALE NTS | 2

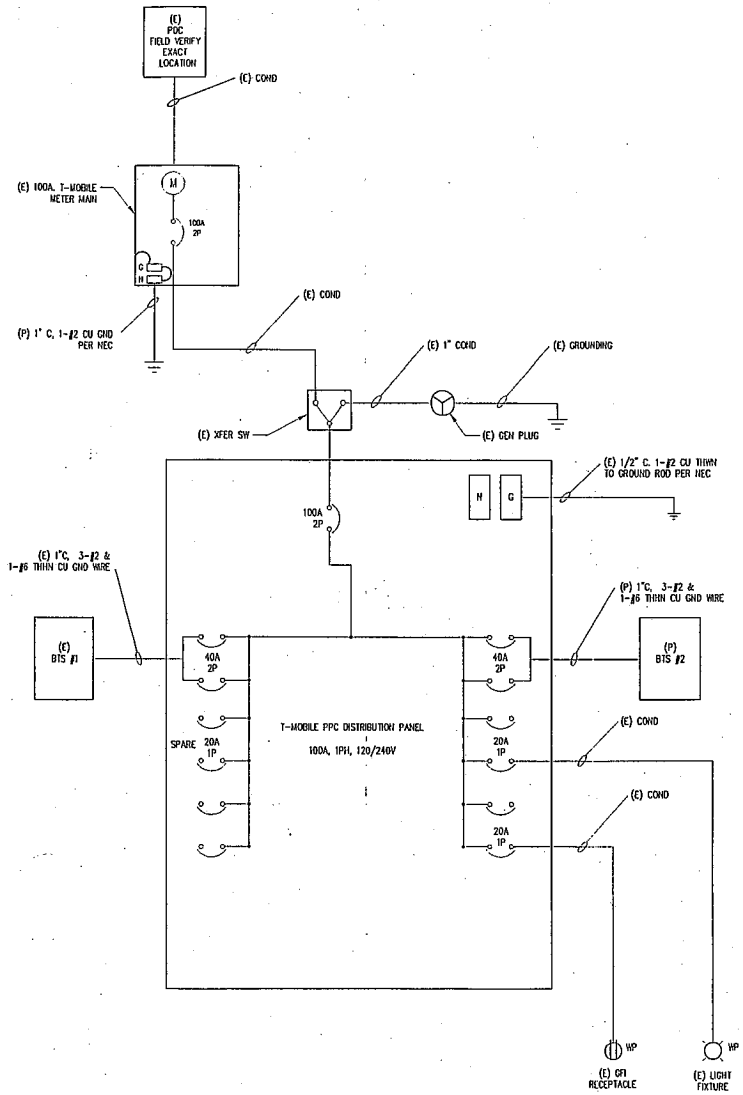

ONE-LINE DIAGRAM

SCALE NTS | 3

ISSUE STATUS

△	DATE	DESCRIPTION	REV
	04/01/09	80% CD	0
	04/22/09	100% CD	1
	04/30/09	100% CD	2
	12/08/10	100% CD	3
	12/16/10	CD'S REVISED	4

SDG JOB NO. 250.115

SDG Architects, Inc.
Architecture / Planning
3361 Walnut Blvd. Ste. 120
Brentwood, CA 94513
(925) 634-7000
FAX: (925) 634-8020

STAMP

T-MOBILE WEST CORPORATION
1855 GATEWAY BLVD, 9TH FLOOR
CONCORD, CA. 94520

SHEPHERD CANYON
BA 02066A
5921 SHEPHERD CANYON RD.
OAKLAND, CA

SHEET TITLE:
SINGLE LINE DIAGRAM AND PANEL SCHEDULE

E-2

W:\PROJECTS\BA02066A - Shepherd Canyon\CD\BA02066A Shepherds Canyon 100CD_REV4.dwg, 12/29/2010 11:22:43 AM, swelker

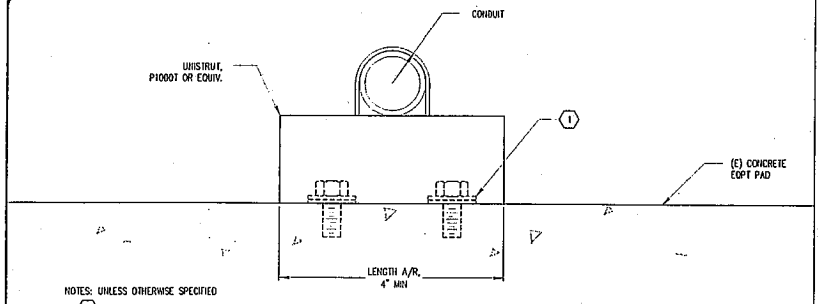

NOTES: UNLESS OTHERWISE SPECIFIED

1. FOR CONCRETE USE: 3/8" THREADED ROD W/HILTI HY-150, EMBEDED 1-3/4" MIN, FOR WOOD USE: 3/8" X 3" LAG BOLTS. FOR METAL STUDS USE: #12 X 3" SHEET METAL SCREWS (MIN 2 PER UNISTRUT)

PROPOSED CONDUIT MOUNT — SCALE FULL — 1

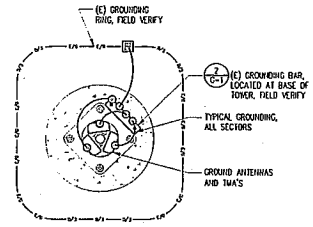

PROPOSED ANTENNA GROUNDING DIAGRAM — SCALE 3/4"=1'-0" — 5

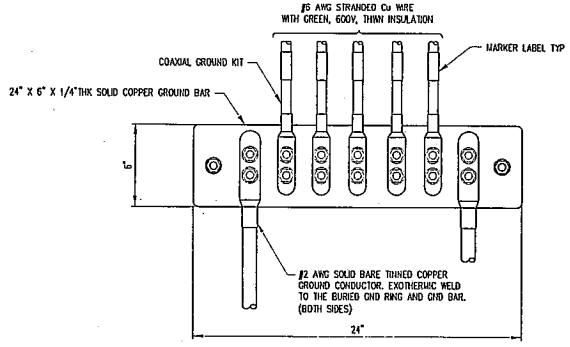

TYPICAL COAX GROUNDING KIT / GROUND BAR DETAIL — SCALE 3"=1'-0" — 2

NOTES: (UNLESS OTHERWISE SPECIFIED)

1. BOND USING EXISTING GROUNDING STRAP IF AVAILABLE

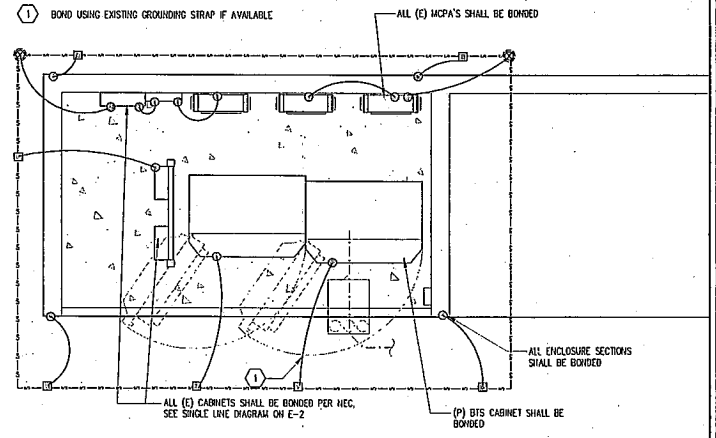

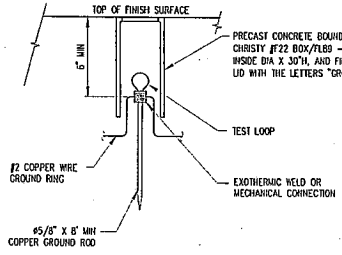

TYPICAL GROUND WELL DETAIL — SCALE NTS — 3

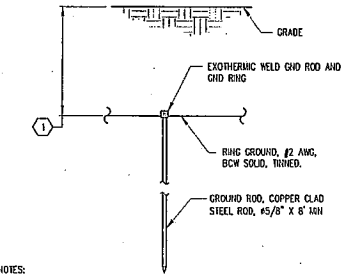

NOTES:

1. DESIGNER/ENGINEER TO DETERMINE DIMENSION WHICH SHALL BE THE BELOW THE FROST LINE OR 30" MIN.
2. GROUND ROD SHALL BE DRIVEN VERTICALLY, NOT TO EXCEED 45 DEGREES FROM THE VERTICAL.

TYPICAL GROUND ROD DETAIL — SCALE NTS — 4

GROUNDING LEGEND

- P/G — PROPOSED GROUNDING RING
- E/G — EXISTING GROUNDING RING
- MECHANICAL CONNECTION
- #2 BCW TINNED EXOTHERMIC CONNECTION
- #5/8" X 10'-0" COPPER , OR COPPER CLAD STEEL, GROUND ROD, PLACED EVERY 10'-0" OC (MAX)...ADITIONAL RODS AS REQD
- GROUND ROD INSPECTION WELL

DIGALERT

DIAL TOLL FREE 1-800-227-2600 AT LEAST TWO WORKING DAYS BEFORE YOU DIG

UNDERGROUND SERVICE ALERT OF CALIFORNIA, (USA NORTH)

PROPOSED EQUIPMENT GROUNDING DIAGRAM — SCALE 1/2"=1'-0" — 6

ISSUE STATUS

DATE	DESCRIPTION	REV
04/01/09	80% CD	0
04/22/09	100% CD	1
04/30/09	100% CD	2
12/08/10	100% CD	3
12/16/10	CD'S REVISED	4

SDG JOB NO. 250.115

SDG Architects, Inc.
Architecture / Planning
3361 Walnut Blvd. Ste. 120
Brentwood, CA 94513
(925) 634-7000
FAX: (925) 634-8020

STAMP

T-MOBILE WEST CORPORATION
T-Mobile
1855 GATEWAY BLVD, 9TH FLOOR
CONCORD, CA. 94520

SHEPHERD CANYON
BA 02066A
5921 SHEPHERD CANYON RD.
OAKLAND, CA

SHEET TITLE: GROUNDING SHEET

G-1

W:\PROJECTS\BA02066A - Shepherd Canyon\CD\BA02066A Shepherds Canyon 100CD_REV4.dwg, 12/29/2010 11:22:57 AM, swalker

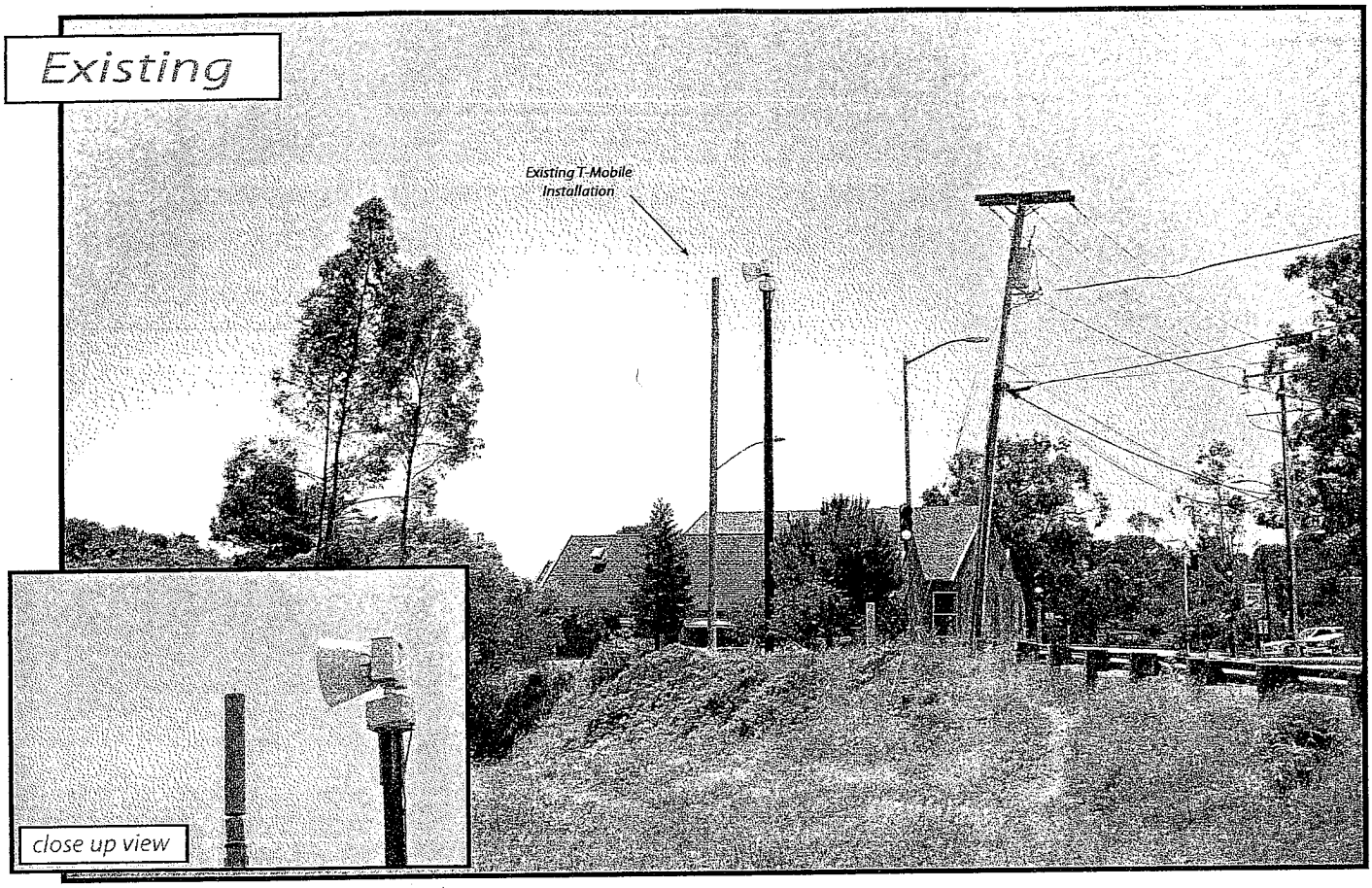

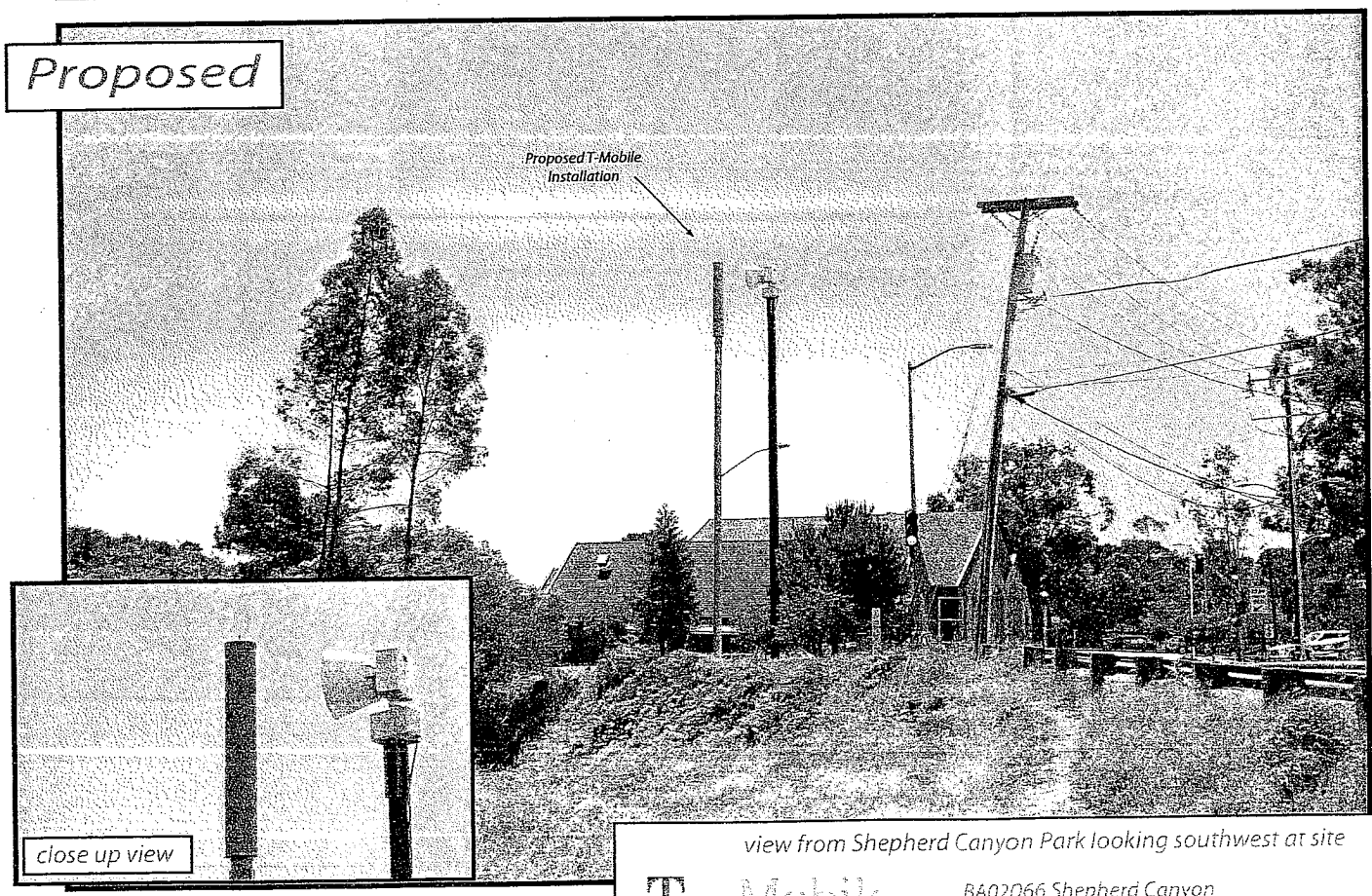

view from Shepherd Canyon Park looking southwest at site

T · · Mobile ·

BA02066 Shepherd Canyon
5900 Shepherd Canyon Road, Oakland, CA

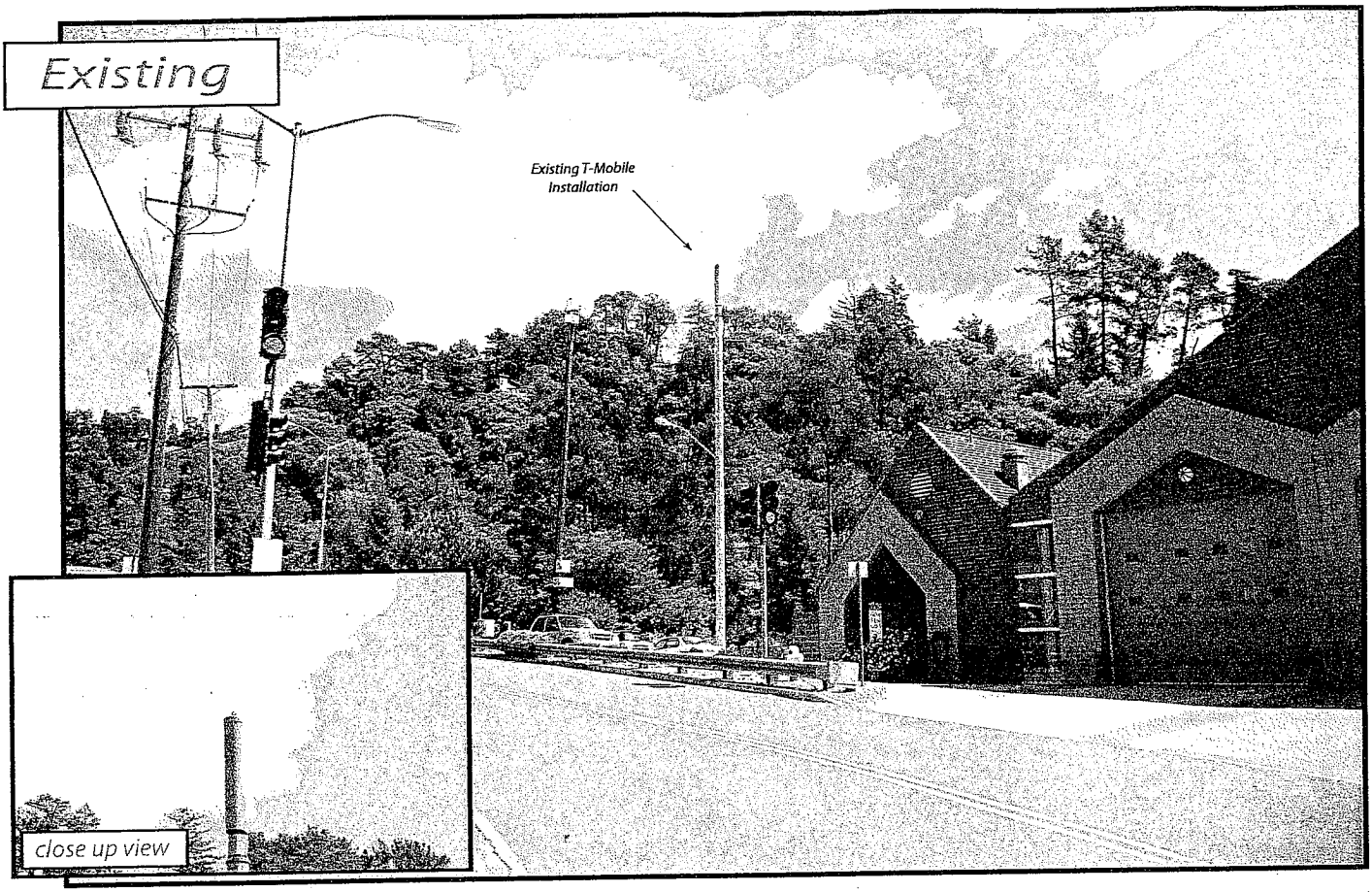

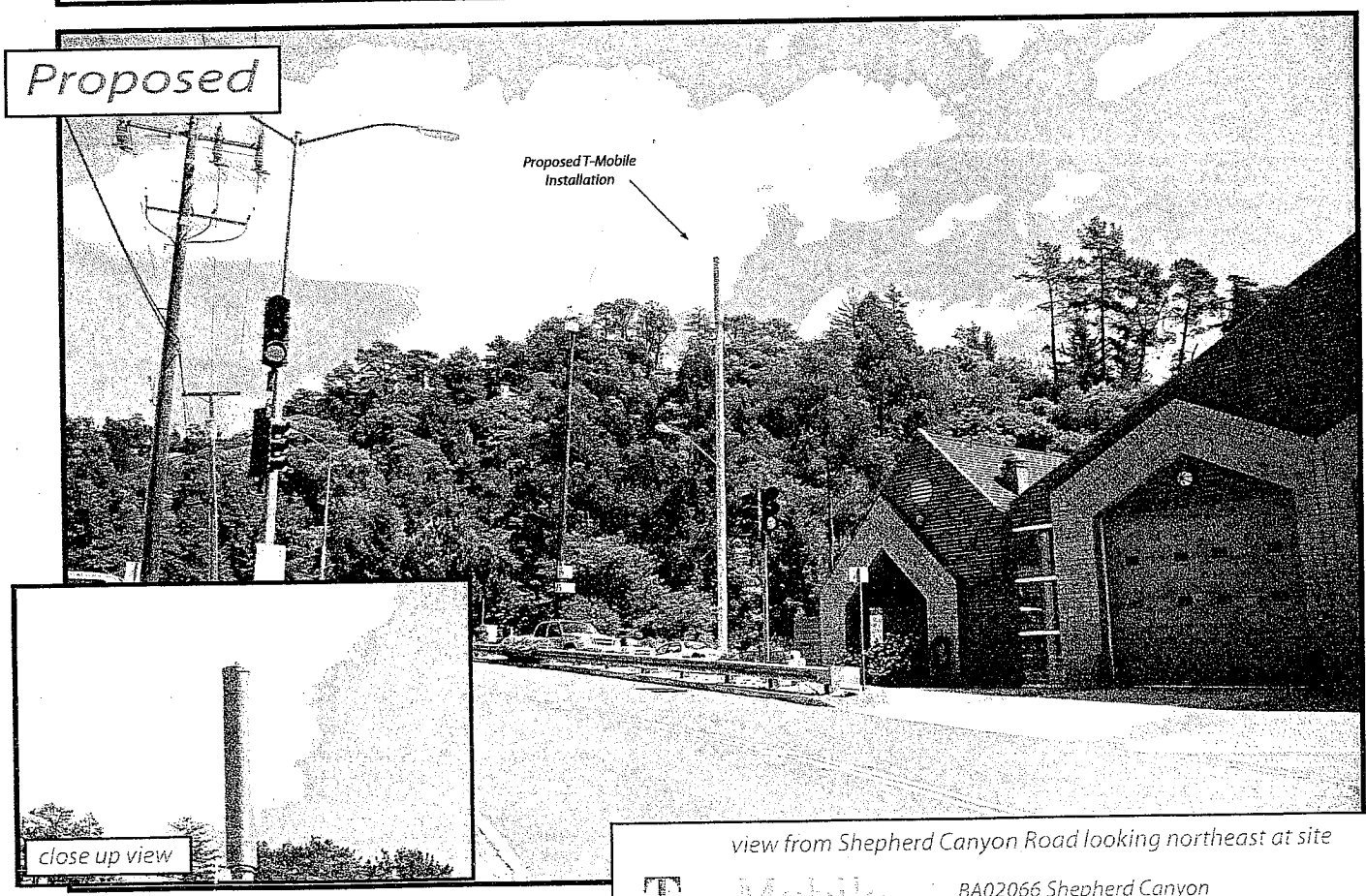

view from Shepherd Canyon Road looking northeast at site

T-Mobile

BA02066 Shepherd Canyon
5900 Shepherd Canyon Road, Oakland, CA

AdvanceSim

Cortel

February 17, 2011

Jason Madani
City of Oakland
Community Development Department
250 Frank H. Ogawa Plaza, Suite 2114
Oakland, CA 94612

RE: T-Mobile Application for Design Review – CMDV11002
5921 Shepherd Canyon Road
APN# 048E-7350-005-01
Alternative Analysis

Dear Mr. Madani:

T-Mobile is proposing to modify an existing site located at 5921 Shepherd Canyon Road to increase the current customer capacity in the Shepherd Canyon area.

T-Mobile did not consider collocating on the existing Sprint pole located at, 6000 Shepherd Canyon Road, for two reasons:

1. The existing Sprint pole would require an additional 10' be added to the existing height in order to avoid interference with the existing carrier. In addition, the diameter of the pole would have to be increased to compensate for additional coax cables and antennas, creating an aesthetic impact to a highly sensitive area.

2. T-Mobile has an existing site across the street and collocating on an alternative site to increase coverage capacity would not be logical.

Please contact me at (415) 244-8018 for any further information you may require. Thank you for your assistance.

Sincerely,

Shannon McDougall
Zoning Specialist

1023 Eagle Avenue • Alameda CA • 94501 • PH (415) 244-8018 •
Shannon.mcdougall@cortel-llc.com

T-Mobile • Base Station No. BA02066A
5900 Shepherd Canyon Road • Oakland, California

Statement of Hammett & Edison, Inc., Consulting Engineers

The firm of Hammett & Edison, Inc., Consulting Engineers, has been retained on behalf of T-Mobile, a personal wireless telecommunications carrier, to evaluate proposed modifications to its existing base station (Site No. BA02066A) located at 5900 Shepherd Canyon Road in Oakland, California, for compliance with appropriate guidelines limiting human exposure to radio frequency ("RF") electromagnetic fields.

Prevailing Exposure Standards

The U.S. Congress requires that the Federal Communications Commission ("FCC") evaluate its actions for possible significant impact on the environment. In Docket 93-62, effective October 15, 1997, the FCC adopted the human exposure limits for field strength and power density recommended in Report No. 86, "Biological Effects and Exposure Criteria for Radiofrequency Electromagnetic Fields," published in 1986 by the Congressionally chartered National Council on Radiation Protection and Measurements ("NCRP"). Separate limits apply for occupational and public exposure conditions, with the latter limits generally five times more restrictive. The more recent standard, developed by the Institute of Electrical and Electronics Engineers and approved as American National Standard ANSI/IEEE C95.1-2006, "Safety Levels with Respect to Human Exposure to Radio Frequency Electromagnetic Fields, 3 kHz to 300 GHz," includes similar exposure limits. A summary of the FCC's exposure limits is shown in Figure 1. These limits apply for continuous exposures and are intended to provide a prudent margin of safety for all persons, regardless of age, gender, size, or health.

The most restrictive FCC limit for exposures of unlimited duration to radio frequency energy for several personal wireless services are as follows:

Personal Wireless Service	Approx. Frequency	Occupational Limit	Public Limit
Broadband Radio ("BRS")	2,600 MHz	5.00 mW/cm^2	1.00 mW/cm^2
Advanced Wireless ("AWS")	2,100	5.00	1.00
Personal Communication ("PCS")	1,950	5.00	1.00
Cellular Telephone	870	2.90	0.58
Specialized Mobile Radio ("SMR")	855	2.85	0.57
Long Term Evolution ("LTE")	700	2.33	0.47
[most restrictive frequency range]	30–300	1.00	0.20

General Facility Requirements

Base stations typically consist of two distinct parts: the electronic transceivers (also called "radios" or "channels") that are connected to the traditional wired telephone lines, and the passive antennas that send the wireless signals created by the radios out to be received by individual subscriber units. The

transceivers are often located at ground level and are connected to the antennas by coaxial cables about 1 inch thick. Because of the short wavelength of the frequencies assigned by the FCC for wireless services, the antennas require line-of-sight paths for their signals to propagate well and so are installed at some height above ground. The antennas are designed to concentrate their energy toward the horizon, with very little energy wasted toward the sky or the ground. Along with the low power of such facilities, this means that it is generally not possible for exposure conditions to approach the maximum permissible exposure limits without being physically very near the antennas.

Computer Modeling Method

The FCC provides direction for determining compliance in its Office of Engineering and Technology Bulletin No. 65, "Evaluating Compliance with FCC-Specified Guidelines for Human Exposure to Radio Frequency Radiation," dated August 1997. Figure 2 attached describes the calculation methodologies, reflecting the facts that a directional antenna's radiation pattern is not fully formed at locations very close by (the "near-field" effect) and that at greater distances the power level from an energy source decreases with the square of the distance from it (the "inverse square law"). The conservative nature of this method for evaluating exposure conditions has been verified by numerous field tests.

Site and Facility Description

Based upon information provided by T-Mobile, including drawings by SDG Architects, Inc., dated April 1, 2009, that carrier presently has three antennas installed within the top of a light pole sited next to the fire station located at 5900 Shepherd Canyon Road in Oakland. It is proposed to replace those antennas with three Andrew Model CSHXX-6516-R2-TAD directional panel antennas at the same locations, mounted with up to 4° downtilt at an effective height of about 57 feet above ground and oriented at about 120° spacing, to provide service in all directions. The maximum effective radiated power in any direction would be 2,560 watts, representing simultaneous operation at 1,710 watts for PCS and 850 watts for AWS.

Located on another light pole about 240 feet away are similar directional panel antennas for use by Sprint Nextel, another wireless telecommunications carrier. For the limited purpose of this study, it is assumed that carrier has installed Andrew Model RR90-17-02 directional panel PCS antennas mounted with 2° downtilt at an effective height of about 35 feet above ground and operates at a maximum effective radiated power 1,500 watts.

Study Results

For a person anywhere at ground, the maximum ambient RF exposure level due to the proposed T-Mobile operation by itself is calculated to be 0.0041 mW/cm^2, which is 0.41% of the applicable public exposure limit. The maximum calculated cumulative level at ground for the simultaneous operation of both carriers is 0.58% of the public exposure limit. The maximum calculated cumulative level on the roof of the adjacent fire station building* is 1.1% of the public exposure limit. The maximum calculated cumulative level at any nearby residence† is 1.5% of the public limit. It should be noted that these results include several "worst-case" assumptions and therefore are expected to overstate actual power density levels.

Recommended Mitigation Measures

Due to their mounting location, the T-Mobile antennas would not be accessible to the general public, and so no mitigation measures are necessary to comply with the FCC public exposure guidelines. To prevent occupational exposures in excess of the FCC guidelines, no access within 3 feet directly in front of the T-Mobile antennas themselves, such as might occur during maintenance work on the pole, should be allowed while the base station is in operation, unless other measures can be demonstrated to ensure that occupational protection requirements are met. Posting explanatory warning signs‡ at the antennas and/or on the pole below the antennas, such that the signs would be readily visible from any angle of approach to persons who might need to work within that distance, would be sufficient to meet FCC-adopted guidelines.

Conclusion

Based on the information and analysis above, it is the undersigned's professional opinion that the T-Mobile base station located at 5900 Shepherd Canyon Road in Oakland, California, will comply with the prevailing standards for limiting public exposure to radio frequency energy and, therefore, will not for this reason cause a significant impact on the environment. The highest calculated level in publicly accessible areas is much less than the prevailing standards allow for exposures of unlimited duration. This finding is consistent with measurements of actual exposure conditions taken at other operating base stations. Posting of explanatory signs is recommended to establish compliance with occupational exposure limitations.

---

* Located at least 30 feet away, based on aerial photographs from Google Maps.

† Located about 380 feet away, based on aerial photographs from Google Maps.

‡ Warning signs should comply with OET-65 color, symbol, and content recommendations. Contact information should be provided (*e.g.*, a telephone number) to arrange for access to restricted areas. The selection of language(s) is not an engineering matter, and guidance from the landlord, local zoning or health authority, or appropriate professionals may be required.

T-Mobile • Base Station No. BA02066A
5900 Shepherd Canyon Road • Oakland, California

Authorship

The undersigned author of this statement is a qualified Professional Engineer, holding California Registration Nos. E-13026 and M-20676, which expire on June 30, 2009. This work has been carried out under his direction, and all statements are true and correct of his own knowledge except, where noted, when data has been supplied by others, which data he believes to be correct.

REGISTERED PROFESSIONAL ENGINEER
WILLIAM F. HAMMETT
E-13026
M-20676
Exp. 6-30-09
ELECTRICAL
MECHANICAL
STATE OF CALIFORNIA

William F. Hammett, P.E.

April 29, 2009

FCC Radio Frequency Protection Guide

The U.S. Congress required (1996 Telecom Act) the Federal Communications Commission ("FCC") to adopt a nationwide human exposure standard to ensure that its licensees do not, cumulatively, have a significant impact on the environment. The FCC adopted the limits from Report No. 86, "Biological Effects and Exposure Criteria for Radiofrequency Electromagnetic Fields," published in 1986 by the Congressionally chartered National Council on Radiation Protection and Measurements ("NCRP"). Separate limits apply for occupational and public exposure conditions, with the latter limits generally five times more restrictive. The more recent standard, developed by the Institute of Electrical and Electronics Engineers and approved as American National Standard ANSI/IEEE C95.1-2006, "Safety Levels with Respect to Human Exposure to Radio Frequency Electromagnetic Fields, 3 kHz to 300 GHz," includes similar limits. These limits apply for continuous exposures from all sources and are intended to provide a prudent margin of safety for all persons, regardless of age, gender, size, or health.

As shown in the table and chart below, separate limits apply for occupational and public exposure conditions, with the latter limits (in *italics* and/or dashed) up to five times more restrictive:

Frequency	Electromagnetic Fields (f is frequency of emission in MHz)					
Applicable Range (MHz)	Electric Field Strength (V/m)		Magnetic Field Strength (A/m)		Equivalent Far-Field Power Density (mW/cm^2)	
0.3 – 1.34	614	*614*	1.63	*1.63*	100	*100*
1.34 – 3.0	614	*823.8/f*	1.63	*2.19/f*	100	*180/f^2*
3.0 – 30	1842/ f	*823.8/f*	4.89/ f	*2.19/f*	900/ f^2	*180/f^2*
30 – 300	61.4	*27.5*	0.163	*0.0729*	1.0	*0.2*
300 – 1,500	$3.54\sqrt{f}$	*$1.59\sqrt{f}$*	$\sqrt{f}/106$	*$\sqrt{f}/238$*	f/300	*f/1500*
1,500 – 100,000	137	*61.4*	0.364	*0.163*	5.0	*1.0*

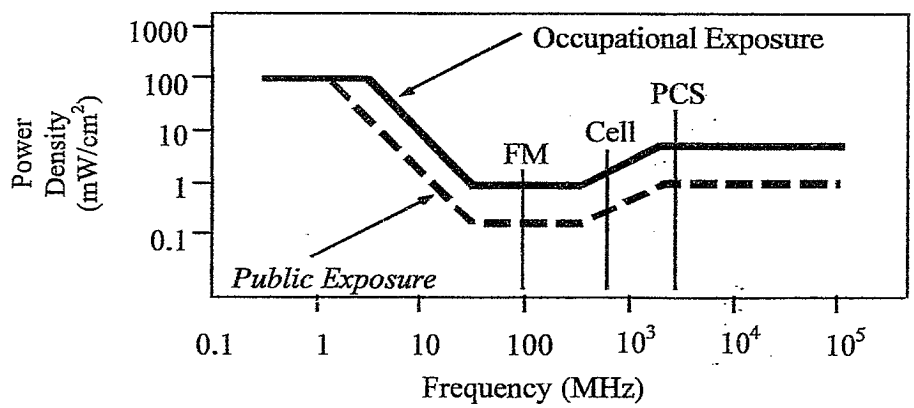

Higher levels are allowed for short periods of time, such that total exposure levels averaged over six or thirty minutes, for occupational or public settings, respectively, do not exceed the limits, and higher levels also are allowed for exposures to small areas, such that the spatially averaged levels do not exceed the limits. However, neither of these allowances is incorporated in the conservative calculation formulas in the FCC Office of Engineering and Technology Bulletin No. 65 (August 1997) for projecting field levels. Hammett & Edison has built those formulas into a proprietary program that calculates, at each location on an arbitrary rectangular grid, the total expected power density from any number of individual radio sources. The program allows for the description of buildings and uneven terrain, if required to obtain more accurate projections.

RFR.CALC™ Calculation Methodology

Assessment by Calculation of Compliance with FCC Exposure Guidelines

The U.S. Congress required (1996 Telecom Act) the Federal Communications Commission ("FCC") to adopt a nationwide human exposure standard to ensure that its licensees do not, cumulatively, have a significant impact on the environment. The maximum permissible exposure limits adopted by the FCC (see Figure 1) apply for continuous exposures from all sources and are intended to provide a prudent margin of safety for all persons, regardless of age, gender, size, or health. Higher levels are allowed for short periods of time, such that total exposure levels averaged over six or thirty minutes, for occupational or public settings, respectively, do not exceed the limits.

Near Field.

Prediction methods have been developed for the near field zone of panel (directional) and whip (omnidirectional) antennas, typical at wireless telecommunications base stations, as well as dish (aperture) antennas, typically used for microwave links. The antenna patterns are not fully formed in the near field at these antennas, and the FCC Office of Engineering and Technology Bulletin No. 65 (August 1997) gives suitable formulas for calculating power density within such zones.

For a panel or whip antenna, power density $S = \frac{180}{\theta_{BW}} \times \frac{0.1 \times P_{net}}{\pi \times D \times h}$, in mW/cm^2,

and for an aperture antenna, maximum power density $S_{max} = \frac{0.1 \times 16 \times \eta \times P_{net}}{\pi \times h^2}$, in mW/cm^2,

where θ_{BW} = half-power beamwidth of the antenna, in degrees, and
P_{net} = net power input to the antenna, in watts,
D = distance from antenna, in meters,
h = aperture height of the antenna, in meters, and
η = aperture efficiency (unitless, typically 0.5-0.8).

The factor of 0.1 in the numerators converts to the desired units of power density.

Far Field.

OET-65 gives this formula for calculating power density in the far field of an individual RF source:

$$\text{power density } S = \frac{2.56 \times 1.64 \times 100 \times RFF^2 \times ERP}{4 \times \pi \times D^2}, \text{ in mW/cm}^2,$$

where ERP = total ERP (all polarizations), in kilowatts,
RFF = relative field factor at the direction to the actual point of calculation, and
D = distance from the center of radiation to the point of calculation, in meters.

The factor of 2.56 accounts for the increase in power density due to ground reflection, assuming a reflection coefficient of 1.6 (1.6 x 1.6 = 2.56). The factor of 1.64 is the gain of a half-wave dipole relative to an isotropic radiator. The factor of 100 in the numerator converts to the desired units of power density. This formula has been built into a proprietary program that calculates, at each location on an arbitrary rectangular grid, the total expected power density from any number of individual radiation sources. The program also allows for the description of uneven terrain in the vicinity, to obtain more accurate projections.