Location:	**8818-8820 International Blvd. (See map on reverse)**
Assessors Parcel Numbers:	**(043-4579-011-04)**
Proposal:	To install three (3) telecommunication antennas, six (6) RRU's, and two enclosed equipment cabinets at a site with existing antennas.
Applicant:	AT&T c/o Jonathan Fong of the Lyle Company
Contact Person/ Phone Number:	Jonathan Fong (916)868-6673
Owner:	Alex and Marcus Preiger
Case File Number:	**CMD10-276**
Planning Permits Required:	Regular Design Review to install three (3) telecommunication antennas, six (6) RRU's, and two enclosed equipment cabinets. Major Conditional Use Permit for the installation of a Macro telecommunication facility within 100 feet of a residential zone.
General Plan:	Neighborhood Center Mixed Use and Detached Unit Residential
Zoning:	C-40 Community Thoroughfare Commercial Zone S-4 Design Review Combining Zone R-30 One-Family Residential Zone
Environmental Determination:	Exempt, Section 15301 of the State CEQA Guidelines; minor alterations to an existing facility Section 15183 of the State CEQA Guidelines; projects consistent with a community plan, general Plan or zoning.
Historic Status:	Potential Designated Historic Property (PDHP); Survey rating: Dc2+
Service Delivery District:	6
City Council District:	7
Date Filed:	10/28/10
Finality of Decision:	Appealable to City Council within 10 days
For Further Information:	Contact case planner **Michael Bradley** at **(510) 238-36935** or mbradley@oaklandnet.com

SUMMARY

The following staff report addresses the proposal for additional unmanned wireless telecommunication facility located on the roof of an existing grocery store (Food King) with associated equipment cabinets located within a fenced area on the ground and next to the building. The project site already consists of 18 telecom antennas and associated equipment cabinets. Given the number of antennas and the type of structure, this would be considered a "Macro" Telecommunications Facility. The site is located within a commercial district along International Boulevard with the rear half of the parcel located in a residential neighborhood. The site is split by the C-40 Community Thoroughfare Commercial Zone and the R-30 One-

Family Residential Zone and the General Plan designations for the site are Neighborhood Center Mixed Use and Detached Unit Residential.

PROJECT DESCRIPTION

The applicant (AT&T) is proposing to install three (3) wireless telecommunication panel antennas mounted to the wall of an existing building at the roof line with paint and texture to match the existing building. The proposal for the equipment cabinets is to locate the cabinets behind an existing enclosed area and adjacent to the other existing telecommunication providers equipment cabinets on the ground next to the building. All proposed antennas and associated equipment will not be accessible to the public. **(See Attachment A)**.

PROPERTY DESCRIPTION

The subject property is approximately 40,195 square feet, located in the 8800 block of International Boulevard between 88th Avenue and 89th Avenue. The subject property has a fully functioning multi-tenant grocery store on the site. The property was first developed in 1928 (based on Alameda County Assessors Data) with a 13,300 square foot movie theater. Currently there is a macro telecommunication facility with three separate telecommunication providers on the property including 18 antennas and two equipment cabinet areas on the ground next to the building.

GENERAL PLAN ANALYSIS

The subject property is located within the Neighborhood Center Mixed Use General Plan designations. The Neighborhood Center Mixed Use land use classification is intended to identify, create, maintain and enhance mixed use neighborhood commercial centers. The Detached Unit Residential classification is intended to create, maintain, and enhance residential areas characterized by detached, single unit structures. The proposed unmanned wireless telecommunication facility will not adversely affect and detract from the commercial or residential characteristics of the neighborhood. The antennas will be mounted on the existing building and visual impacts will be mitigated since the antennas will be enclosed painted and textured to match the existing building. General Plan Policy N9.9 states that the City encourages rehabilitation efforts which respect the architectural integrity of a building's original style. The proposed project will have very minimal effect on the existing building and the architectural additions to the building will match the existing materials and art deco character that is present.

ZONING ANALYSIS

The subject property is located within the C-40 Community Thoroughfare Commercial Zone and the R-30 One-Family Residential Zone. The site is split by the C-40 zone, which is the front half of the parcel on International Boulevard and the R-30 zone, which is the rear half of the parcel. The C-40 zone is intended to create, preserve, and enhance areas with a wide range of both retail and wholesale establishments serving both short and long term needs in convenient locations, and is typically appropriate along major thoroughfares. The R-30 zone is intended to create, preserve, and enhance areas for single-family dwellings in desirable settings for urban living, and is typically appropriate to already developed lower density dwelling areas of the city. The proposal is for additional unmanned wireless telecommunication equipment to be mounted to the

wall of an existing building and requires a major conditional use permit since the project is within one hundred feet of the boundary of a residential zone. Staff finds that the proposed application meets applicable C-40 and R-30 zoning and City of Oakland Telecommunication regulations.

ENVIRONMENTAL DETERMINATION

The California Environmental Quality Act (CEQA) Guidelines lists the projects that qualify as categorical exemptions from environmental review. The proposed project is categorically exempt from the environmental review requirements pursuant to Section 15301, alterations to existing facilities, and 15183, projects consistent with a community plan, general plan or zoning.

KEY ISSUES AND IMPACTS

1. Conditional Use Permit

Section 17.16.070 and 17.54.080 of the City of Oakland Planning Code requires a conditional use permit to install a Macro Telecommunication facility in the C-40 and R-30 zones. Furthermore, Section 17.134.020 defines a major and minor conditional use permits. Subsections (A)(3)(i) lists a major conditional use permit: "Any telecommunication facility in or within one hundred (100) feet of the boundary of any residential zone. The required findings for a major conditional use permit are listed and included in staff's evaluation as part of this report.

2. Project Site

Section 17.128.110 of the City of Oakland Telecommunication Regulations indicate that new wireless facilities shall generally be located on designated properties or facilities in the following order of preference:

A. Co-located on an existing structure or facility with existing wireless antennas.
B. City owned properties or other public or quasi-public facilities.
C. Existing commercial or industrial structures in non-residential zones.
D. Existing commercial or industrial structures in residential zones.
E. Other non-residential uses in residential zones.
F. Residential uses in non-residential zones.
G. Residential uses in residential zones.

*Facilities locating on an A, B or C ranked preference do not require a site alternatives analysis.

Since the proposed project involves co-locating the installation of new antennas and associated equipment cabinets on a facility, the proposed project meets (A) co-locating on an existing structure or facility with existing wireless antennas.

3. Project Design

Section 17.128.120 of the City of Oakland Telecommunications Regulations indicates that new wireless facilities shall generally be designed in the following order of preference:

A. Building or structure mounted antennas completely concealed from view.
B. Building or structure mounted antennas set back from roof edge, not visible from public right-of way.
C. Building or structure mounted antennas below roof line (facade mount, pole mount) visible from public right-of-way, painted to match existing structure.
D. Building or structure mounted antennas above roof line visible from public right of-way.
E. Monopoles.
F. Towers.

* Facilities designed to meet an A or B ranked preference do not require a site design alternatives analysis. Facilities designed to meet a C through F ranked preference, inclusive, must submit a site design alternatives analysis as part of the required application materials. A site design alternatives analysis shall, at a minimum, consist of:

a. Written evidence indicating why each higher preference design alternative can not be used. Such evidence shall be in sufficient detail that independent verification could be obtained if required by the City of Oakland Zoning Manager. Evidence should indicate if the reason an alternative was rejected was technical (e.g. incorrect height, interference from existing RF sources, inability to cover required area) or for other concerns (e.g. inability to provide utilities, construction or structural impediments).

City of Oakland Planning staff has reviewed and determined that the site selected is conforming to all other telecommunication regulation requirements. The project has met design criteria (A) since the antennas will be mounted completely screened with paint and texture to match the existing building. Furthermore, to mitigate visual impacts the antennas will be mounted approximately 54' above the public right of way. The associated equipment cabinets will have no visual impact since the equipment will be placed behind an existing fenced in area with other existing telecommunication equipment.

4. Project Radio Frequency Emissions Standards

Section 17.128.130 of the City of Oakland Telecommunication Regulations require that the applicant submit the following verifications including requests for modifications to existing facilities:

a. With the initial application, a RF emissions report, prepared by a licensed professional engineer or other expert, indicating that the proposed site will operate within the current acceptable thresholds as established by the Federal government or any such agency who may be subsequently authorized to establish such standards.
b. Prior to commencement of construction, a RF emissions report indicating the baseline RF emissions condition at the proposed site.
c. Prior to final building permit sign off, an RF emissions report indicating that the site is actually operating within the acceptable thresholds as established by the Federal government or any such agency who may be subsequently authorized to establish such standards.

The applicant states that the proposed project meets the radio frequency (RF) emissions standards as required by the regulatory agency. Submitted with the initial application was a RF

emissions report, prepared by EBI Consulting, (**attachment B**). The report states that the proposed project will comply with the prevailing standards for limiting public exposure to radio frequency energy and, therefore, will not cause a significant impact on the environment. Additionally, staff recommends that prior to the final building permit sign off, the applicant submits certified RF emissions report stating that the facility is operating within acceptable thresholds established by the regulatory federal agency.

CONCLUSION

City of Oakland planning staff believes that the proposed project and subject property can be developed to meet the established zoning and telecommunication regulations that were created and adopted to set certain criteria minimums and maximums for similar types of developments. Staff believes that the findings for approval can be made to support the Conditional Use Permit and Design Review.

RECOMMENDATIONS:

1. Affirm staff's environmental determination
2. Approve Conditional Use Permit and Design Review application CMD10-276 subject to the attached findings and conditions of approval

Prepared by:

Michael Bradley

Michael Bradley
Planner I

Approved by:

Scott Miller

Scott Miller
Zoning Manager

Approved for forwarding to the
City Planning Commission

Scott Miller for

Eric Angstadt, Deputy Director
Community & Economic Development Agency

ATTACHMENTS:

A. Project Plans & Photo simulation
B. EBI Consulting RF Emissions Report

FINDINGS FOR APPROVAL

FINDINGS FOR APPROVAL:
This proposal meets all the required findings under Section 17.134.050, of the General Use Permit criteria; all the required findings under Section 17.136.050.(B), of the Non-Residential Design Review criteria; all the required findings under Section 17.128.070(B), of the telecommunication facilities (Macro) Design Review criteria; and all the required findings under Section 17.128.070.(C), of the telecommunication facilities (Macro) Conditional Use Permit criteria; and as set forth below and which are required to approve your application. Required findings are shown in **bold** type; reasons your proposal satisfies them are shown in normal type.

SECTION 17.134.050 – MINOR CONDITIONAL USE PERMIT FINDINGS:

A. That the location, size, design, and operating characteristics of the proposed development will be compatible with, and will not adversely affect, the livability or appropriate development of abutting properties and the surrounding neighborhood, with consideration to be given to harmony in scale, bulk, coverage, and density; to the availability of civic facilities and utilities; to harmful effect, if any upon desirable neighborhood character; to the generation of traffic and the capacity of surrounding streets; and to any other relevant impact of the development.

The location, size, design and operational characteristics of the proposal will not adversely affect the livability or appropriate development of abutting properties and the surrounding neighborhood. Consideration was given to the harmony in scale, bulk, and coverage; to the availability of civic facilities and utilities; to harmful effect, if any, upon desirable neighborhood character; to the generation of traffic and the capacity of surrounding streets; and to any other relevant impact of the development. The proposed telecommunications antennas will be co-located with 18 existing antennas on the roof top of an existing building and will not adversely affect the operating characteristic or livability of the existing area. The antennas will be mounted to the wall and painted to match the existing texture and color of the building. The facility will be unmanned and will not create additional vehicular traffic in the area.

B. That the location, design, and site planning of the proposed development will provide a convenient and functional living, working, shopping, or civic environment, and will be as attractive as the nature of the use and its location and setting warrant.

The location, design and site planning of the proposed development will provide a convenient and functional working and shopping environment, and will attempt to preserve the attractive nature of the use and its location and setting warrant. The proposal will preserve a convenient and functional working and living environment; therefore it would not affect the general quality and character of the neighborhood.

C. That the proposed development will enhance the successful operation of the surrounding area in its basic community functions, or will provide an essential service to the community or region.

The proposed development will enhance the successful operation of the surrounding area in its basic community function and will provide an essential service to the community or region. This will be achieved by improving the functional use of the site by providing a regional telecommunication facility for the community and will be available to police, fire, public safety organizations and the general public.

D. That the proposal conforms to all applicable design review criteria set forth in the DESIGN REVIEW PROCEDURE of Chapter 17.136 of the Oakland Planning Code.

The proposal conforms with all significant aspects of the design review criteria set forth in Chapter 17.136 of the Oakland Planning Code, as outlined below.

E. That the proposal conforms in all significant respects with the Oakland General Plan and with any other applicable plan or development control map which has been adopted by the City Council.

The proposal conforms in all significant aspects with the Oakland General Plan and with any other applicable plan or zoning maps adopted by the City of Oakland. The proposed macro-telecommunication facility in the Neighborhood Center Mixed Use and Detached Unit Residential General Plan designation will enhance and improve communication service for a mixture of civic, commercial and institutional uses in the area.

17.136.050(B) – NONRESIDENTIAL DESIGN REVIEW CRITERIA:

1. That the proposal will help achieve or maintain a group of facilities which are well related to one another and which, when taken together, will result in a well-composed design, with consideration given to site, landscape, bulk, height, arrangement, texture, materials, colors, and appurtenances; the relation of these factors to other facilities in the vicinity; and the relation of the proposal to the total setting as seen from key points in the surrounding area. Only elements of design which have some significant relationship to outside appearance shall be considered, except as otherwise provided in Section 17.136.060;

The proposal is the addition to a macro telecommunications facility which includes the addition of three panel antennas mounted to the existing building and two equipments cabinets, located next to the building on the ground. The proposed antennas will be painted and textured to match the existing texture and color of the existing materials and therefore is consistent and well related to the surrounding area in scale, bulk, height, materials, and textures.

2. That the proposed design will be of a quality and character which harmonizes with, and serves to protect the value of, private and public investments in the area;

The design will be appropriate and compatible with current zoning and general plan land use designations. The proposal protects and preserves the surrounding neighborhood context by adding additional wireless telecommunication antennas to a commercial and residential area. The antennas will be away from public view and will not have any visual impact on the neighborhood.

3. That the proposed design conforms in all significant respects with the Oakland General Plan and with any applicable design review guidelines or criteria, district plan, or development control map which have been adopted by the Planning Commission or City Council.

The proposal conforms with the City of Oakland Comprehensive General Plan meeting specific General Plan policies and the Supplemental Report and Recommendations on Revisions to the Citywide Telecommunications Regulations. The proposal will conform to performance standards for noise set forth in Section 17.120.050 for decibels levels in commercial and residential areas for both day and nighttime use. The Project conforms to all macro-facility definitions set forth in Section 17.128.070 and meets all design review criteria to minimize all impacts throughout the neighborhood

FOR POTENTIAL DESIGNATED HISTORIC PROPERTIES THAT ARE NOT LOCAL REGISTER PROPERTIES:

1. That for additions or alterations
a. The design matches or is compatible with, but not necessarily identical to, the property's existing or historical design;

All new materials, texture and color will match the existing exterior building materials.

2. That for demolition or removal;

There is no demolition planned for the proposed project.

<u>17.128.070(B) DESIGN REVIEW CRITERIA FOR MACRO FACILITIES</u>

1. Antennas should be painted and/or textured to match the existing structure:

All new materials, texture and color will match the existing exterior building materials.

2. Antennas mounted on architecturally significant structures or significant architectural details of the building should be covered by appropriate casings which are manufactured to match existing architectural features found on the building:

All new materials, texture and color will match the existing exterior building materials.

3. Where feasible, antennas can be placed directly above, below or incorporated with vertical design elements of a building to help in camouflaging:

The proposed antennas will be incorporated into the vertical design elements of the building to create a vertical addition on the existing walls with color and texture to match existing building materials and design.

4. Equipment shelters or cabinets shall be screened from the public view by using landscaping, or materials and colors consistent with surrounding backdrop:

The associated equipment shelters or cabinets will be co-located with the existing equipment cabinets and located on the ground next to the building and behind a fence.

5. Equipment shelters shall be consistent with the general character of the area:

The equipment cabinets will be co-located in an area where there is no public access. The equipment cabinets will be located behind a locked gate.

6. For antennas attached to the roof, maintain a 1:1 ratio for equipment setback; screen the antennas to match existing air conditioning units, stairs, or elevator towers; avoid placing roof mounted antennas in direct line with significant view corridors.

The proposed equipment shelters will be co-located on the ground next to the existing building.

7. That all reasonable means of reducing public access to the antennas and equipment has been made, including, but not limited to, placement in or on buildings or structures, fencing, anti-climbing measures and anti-tampering devices.
The antennas will be mounted on the walls at the roof and will not be accessible to the public due to its location. The equipment cabinets will be located with the existing equipment cabinets on the ground behind a locked gate.

Section 17.128.070(C) CONDITIONAL USE PERMIT (CUP) FINDINGS FOR MACRO FACILITIES

1. The project must meet the special design review criteria listed in subsection B of this section (17.128.070B):

The proposed project meets the special design review criteria listed in section 17.128.070B.

2. The proposed project must not disrupt the overall community character:

Due to the proposed project co-locating with other existing telecommunication antennas and equipment, it will not disrupt the overall community character of the site.

CONDITIONS OF APPROVAL
CMD07-470

STANDARD CONDITIONS:

1. Approved Use
Ongoing
a) The project shall be constructed and operated in accordance with the authorized use as described in the application materials, **CMD10-276**, and the plans dated **October 25, 2010** and submitted on **October 28, 2010** and as amended by the following conditions. Any additional uses or facilities other than those approved with this permit, as described in the project description and the approved plans, will require a separate application and approval. Any deviation from the approved drawings, Conditions of Approval or use shall required prior written approval from the Director of City Planning or designee.

b) This action by the City Planning Commission ("this Approval") includes the approvals set forth below. This Approval includes: **The addition to a macro telecommunications facility located on an existing building at 8818-8820 International Boulevard (APN: 043-4579-011-04), under Oakland Municipal Code 17.128, 17.136 and 17.134.**

2. Effective Date, Expiration, Extensions and Extinguishment
Ongoing
Unless a different termination date is prescribed, this Approval shall expire two calendar years from the approval date, unless within such period all necessary permits for construction or alteration have been issued, or the authorized activities have commenced in the case of a permit not involving construction or alteration. Upon written request and payment of appropriate fees submitted no later than the expiration date of this permit, the Director of City Planning or designee may grant a one-year extension of this date, with additional extensions subject to approval by the approving body. Expiration of any necessary building permit for this project may invalidate this Approval if the said extension period has also expired.

3. Scope of This Approval; Major and Minor Changes
Ongoing
The project is approved pursuant to the Oakland Planning Code only. Minor changes to approved plans may be approved administratively by the Director of City Planning or designee. Major changes to the approved plans shall be reviewed by the Director of City Planning or designee to determine whether such changes require submittal and approval of a revision to the approved project by the approving body or a new, completely independent permit.

4. Conformance with other Requirements
Prior to issuance of a demolition, grading, P-job, or other construction related permit

a) The project applicant shall comply with all other applicable federal, state, regional and/or local codes, requirements, regulations, and guidelines, including but not limited to those imposed by the City's Building Services Division, the City's Fire Marshal, and the City's Public Works Agency.
b) The applicant shall submit approved building plans for project-specific needs related to fire protection to the Fire Services Division for review and approval, including, but not

limited to automatic extinguishing systems, water supply improvements and hydrants, fire department access, and vegetation management for preventing fires and soil erosion.

5. Conformance to Approved Plans; Modification of Conditions or Revocation
Ongoing

a) Site shall be kept in a blight/nuisance-free condition. Any existing blight or nuisance shall be abated within 60-90 days of approval, unless an earlier date is specified elsewhere.

b) The City of Oakland reserves the right at any time during construction to require certification by a licensed professional that the as-built project conforms to all applicable zoning requirements, including but not limited to approved maximum heights and minimum setbacks. Failure to construct the project in accordance with approved plans may result in remedial reconstruction, permit revocation, permit modification, stop work, permit suspension or other corrective action.

c) Violation of any term, conditions or project description relating to the Approvals is unlawful, prohibited, and a violation of the Oakland Municipal Code. The City of Oakland reserves the right to initiate civil and/or criminal enforcement and/or abatement proceedings, or after notice and public hearing, to revoke the Approvals or alter these conditions if it is found that there is violation of any of the conditions or the provisions of the Planning Code or Municipal Code, or the project operates as or causes a public nuisance. This provision is not intended to, nor does it, limit in any manner whatsoever the ability of the City to take appropriate enforcement actions.

6. Signed Copy of the Conditions
With submittal of a demolition, grading, and building permit
A copy of the approval letter and conditions shall be signed by the property owner, notarized, and submitted with each set of permit plans to the appropriate City agency for this project.

7. Indemnification
Ongoing
a) To the maximum extent permitted by law, the applicant shall defend (with counsel acceptable to the City), indemnify, and hold harmless the City of Oakland, the Oakland City Council, the City of Oakland Redevelopment Agency, the Oakland City Planning Commission and its respective agents, officers, and employees (hereafter collectively called City) from any liability, damages, claim, judgment, loss (direct or indirect)action, causes of action, or proceeding (including legal costs, attorneys' fees, expert witness or consultant fees, City Attorney or staff time, expenses or costs) (collectively called "Action") against the City to attack, set aside, void or annul, (1) an approval by the City relating to a development-related application or subdivision or (2) implementation of an approved development-related project. The City may elect, in its sole discretion, to participate in the defense of said Action and the applicant shall reimburse the City for its reasonable legal costs and attorneys' fees.

b) Within ten (10) calendar days of the filing of any Action as specified in subsection A above, the applicant shall execute a Letter of Agreement with the City, acceptable to the Office of the City Attorney, which memorializes the above obligations. These obligations and the Letter of Agreement shall survive termination, extinguishment or invalidation of the approval. Failure to timely execute the Letter of Agreement does not relieve the applicant of any of the obligations

contained in this condition or other requirements or Conditions of Approval that may be imposed by the City.

8. Compliance with Conditions of Approval
Ongoing
The project applicant shall be responsible for compliance with the recommendations in any submitted and approved technical report and all the Conditions of Approval set forth below at its sole cost and expense, and subject to review and approval of the City of Oakland.

9. Severability
Ongoing
Approval of the project would not have been granted but for the applicability and validity of each and every one of the specified conditions, and if any one or more of such conditions is found to be invalid by a court of competent jurisdiction this Approval would not have been granted without requiring other valid conditions consistent with achieving the same purpose and intent of such Approval.

10. Job Site Plans
Ongoing throughout demolition, grading, and/or construction
At least one (1) copy of the stamped approved plans, along with the Approval Letter and Conditions of Approval, shall be available for review at the job site at all times.

11. Special Inspector/Inspections, Independent Technical Review, Project Coordination and Management
Prior to issuance of a demolition, grading, and/or construction permit
The project applicant may be required to pay for on-call special inspector(s)/inspections as needed during the times of extensive or specialized plancheck review, or construction. The project applicant may also be required to cover the full costs of independent technical and other types of peer review, monitoring and inspection, including without limitation, third party plan check fees, including inspections of violations of Conditions of Approval. The project applicant shall establish a deposit with the Building Services Division, as directed by the Building Official, Director of City Planning or designee.

12. Days/Hours of Construction Operation
Ongoing throughout demolition, grading, and/or construction
The project applicant shall require construction contractors to limit standard construction activities as follows:

a) Construction activities are limited to between 7:00 AM and 7:00 PM Monday through Friday, except that pile driving and/or other extreme noise generating activities greater than 90 dBA shall be limited to between 8:00 a.m. and 4:00 p.m. Monday through Friday.

b) Any construction activity proposed to occur outside of the standard hours of 7:00 am to 7:00 pm Monday through Friday for special activities (such as concrete pouring which may require more continuous amounts of time) shall be evaluated on a case by case basis, with criteria including the proximity of residential uses and a consideration of resident's preferences for whether the activity is acceptable if the overall duration of construction is

shortened and such construction activities shall only be allowed with the prior written authorization of the Building Services Division.

c) Construction activity shall not occur on Saturdays, with the following possible exceptions:

i. Prior to the building being enclosed, requests for Saturday construction for special activities (such as concrete pouring which may require more continuous amounts of time), shall be evaluated on a case by case basis, with criteria including the proximity of residential uses and a consideration of resident's preferences for whether the activity is acceptable if the overall duration of construction is shortened. Such construction activities shall only be allowed on Saturdays with the prior written authorization of the Building Services Division.

ii. After the building is enclosed, requests for Saturday construction activities shall only be allowed on Saturdays with the prior written authorization of the Building Services Division, and only then within the interior of the building with the doors and windows closed.

d) No extreme noise generating activities (greater than 90 dBA) shall be allowed on Saturdays, with no exceptions.

e) No construction activity shall take place on Sundays or Federal holidays.

f) Construction activities include but are not limited to: truck idling, moving equipment (including trucks, elevators, etc) or materials, deliveries, and construction meetings held on-site in a non-enclosed area.

13. Landscape Maintenance
Ongoing
All new landscaping shall be permanently maintained in good growing condition and, whenever necessary, replaced with new plant materials to ensure continued compliance with applicable landscaping requirements.

14. Operational Noise-General
Ongoing
Noise levels from the activity, property, or any mechanical equipment on site shall comply with the performance standards of Section 17.120 of the Oakland Planning Code and Section 8.18 of the Oakland Municipal Code. If noise levels exceed these standards, the activity causing the noise shall be abated until appropriate noise reduction measures have been installed and compliance verified by the Planning and Zoning Division and Building Services.

PROJECT SPECIFIC CONDTIONS:

15. Radio Frequency Emissions
Prior to the final building permit sign off
The applicant shall submit a certified RF emissions report stating the facility is operating within the acceptable standards established by the regulatory Federal Communications Commission.

16. <u>Sinking Fund for Facility Removal or Abandonment.</u>
Prior to issuance of a building permit
The applicant shall provide proof of the establishment of a sinking fund to cover the cost of removing the facility if it is abandoned within a prescribed period. The word "abandoned" shall mean a facility that has not been operational for a six (6) month period, except where non-operation is the result of maintenance of renovation activity pursuant to valid City permits. The sinking fund shall be established to cover a two year period, at a financial institution approved by the City's Office of Budget and Finance. The sinking fund payment shall be adequate to determined by the office of Budget and Finance and shall be adequate to defray expenses associated with the removal of the telecommunication facility.

17. <u>Architectural Detailing and Painting</u>
Prior to the final building permit sign off
The applicant shall paint and texture all proposed antennas, dishes and other related equipment attached to the building to match the existing building materials and texture.

RECEIVED
OCT 1 - 2010
CITY PLANNING COMMISSION
ZONING DIVISION

at&t

INTERNATIONAL BLVD & 92ND

CNU2067

UMTS#: CNU2067
GSM#: SF2067
FA LOCATION#: 10101486
USID#: 47116

PROJECT DESCRIPTION

ODIFICATION TO AN (E) UNMANNED TELECOMMUNICATION FACILITY CONSISTING OF INSTALLING A (N) RBA72 LTE CABINET, (2) (N) PURCELL INETS, (3) (N) ANTENNAS & (6) (N) RRUS'S.

PROJECT INFORMATION

E NAME:	INTERNATIONAL BLVD & 92ND	SITE #:	CNU2067
INTY:	ALAMEDA	JURISDICTION:	CITY OF OAKLAND
:	043-4579-011-03, 043-4579-011-02, 043-4579-010	POWER:	PG&E
E ADDRESS:	8820 INTERNATIONAL BLVD OAKLAND, CA 94621	TELEPHONE:	AT&T
RRENT ZONING:	COMMERCIAL RETAIL		
NSTRUCTION TYPE:	IV		
CUPANCY TYPE:	U		
OPERTY OWNER:	ALEX PREIGER 2682 CEDRO LN WALNUT CREEK, CA 94598		
PLICANT:	AT&T 4430 ROSEWOOD DR BLDG 3, 6TH FLOOR PLEASANTON, CA 94588		
SING CONTACT:	ATTN: RICK RAMIREZ (925) 737-5800		
ING CONTACT:	ATTN: CRAIG WALKENHORST (503) 709-2903		
NSTRUCTION CONTACT:	ATTN: MATT ARNOLD (214) 780-6319		
E ACQUISITION MANAGER:	ATTN: RICK RAMIREZ (925) 737-5800		
TITUDE:	N 37° 45' 2.3" NAD 83		
NGITUDE:	W 122° 10' 29.1" NAD 83		
SL:	±33'		

VICINITY MAP

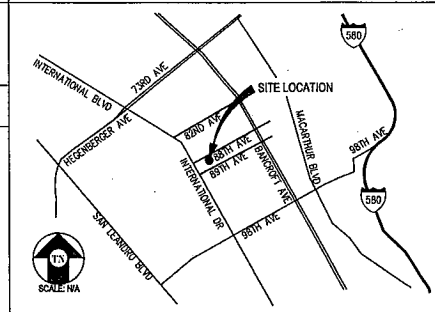

DRIVING DIRECTIONS

FROM: 4430 ROSEWOOD DR BLDG 3, 6TH FLOOR, PLEASANTON, CA 94588
TO: 8820 INTERNATIONAL BLVD OAKLAND, CA 94621

1.	START OUT GOING SOUTHWEST ON ROSEWOOD DR TOWARD OWENS DR	0.6 MI
2.	TURN RIGHT ONTO OWENS DR	0.2 MI
3.	TURN RIGHT ONTO HACIENDA D.	0.3 MI
4.	MERGE ONTO I-580 W TOWARD OAKLAND	11.8 MI
5.	KEEP LEFT TO TAKE I-238 N VIA EXIT 34 TOWARD I-880	2.4 MI
6.	MERGE ONTO I-880 N VIA THE EXIT ON THE LEFT TOWARD OAKLAND	3.9 MI
7.	TAKE THE 98TH AVENUE EXIT, EXIT 35, TOWARD OAKLAND AIRPORT	0.2 MI
8.	TURN RIGHT ONTO 98TH AVE	1.3 MI
9.	TURN LEFT ONTO INTERNATIONAL BLVD/E 14TH ST/CA-185 N	0.5 MI

END AT: 8820 INTERNATIONAL BLVD OAKLAND, CA 94621

ESTIMATED TIME: 27 MINUTES ESTIMATED DISTANCE: 21.14 MILES

CODE COMPLIANCE

ALL WORK & MATERIALS SHALL BE PERFORMED & INSTALLED IN ACCORDANCE WITH THE CURRENT EDITIONS OF THE FOLLOWING CODES AS ADOPTED BY THE LOCAL GOVERNING AUTHORITIES. NOTHING IN THESE PLANS IS TO BE CONSTRUED TO PERMIT WORK NOT CONFORMING TO THESE CODES:

1. 2007 CALIFORNIA ADMINISTRATIVE CODE (INCL. TITLES 24 & 25)
2. 2007 CALIFORNIA BUILDING CODE
3. 2007 CALIFORNIA ELECTRICAL CODE
4. 2007 CALIFORNIA MECHANICAL CODE
5. 2007 CALIFORNIA PLUMBING CODE
6. 2007 CALIFORNIA FIRE CODE
7. LOCAL BUILDING CODES
8. CITY/COUNTY ORDINANCES
9. ANSI/EIA-TIA-222-G

ALONG WITH ANY OTHER APPLICABLE LOCAL & STATE LAWS AND REGULATIONS

LICENSED PROFESSIONAL ENGINEER STEVE MARQUIS C 69672 EXP. 06/30/12 CIVIL STATE OF CALIFORNIA

HANDICAP REQUIREMENTS

THIS FACILITY IS UNMANNED & NOT FOR HUMAN HABITATION. HANDICAPPED ACCESS & REQUIREMENTS ARE NOT REQUIRED IN ACCORDANCE WITH CALIFORNIA STATE ADMINISTRATIVE CODE, TITLE 24 PART 2, SECTION 11058.3.4.2, EXCEPTION 1

SHEET INDEX

SHEET	DESCRIPTION	REV
T-1	TITLE SHEET	–
A-1	SITE PLAN	–
A-2	ENLARGED SITE PLAN	–
A-3	EQUIPMENT PLAN & DETAILS	–
A-4	ANTENNA PLANS & DETAILS	–
A-5	ELEVATIONS	–
A-6	ELEVATION	–
E-1	ELECTRICAL PLAN	–

APPROVAL

RF

LEASING

ZONING

CONSTRUCTION

AT&T

ERICSSON

INTERNATION
BLVD & 92N

CNU2067
8820 INTERNATIONAL BI
OAKLAND, CA 94621

ISSUE STATU

△	DATE	DESCRIPTION
	06/22/10	CD 90%
	06/23/10	CD 100%
	10/25/10	CLIENT REV
	–	–
	–	–
	–	–

DRAWN BY: G. TIBBETT
CHECKED BY: L. HOUGHT
APPROVED BY: S. MARQUI
DATE: 10/25/10

Streamline Engineering and Design, Inc.
3268 Penryn Rd, Suite 200 Loomis, CA 95650
Contact: Kevin Sorensen Phone: 916-660-5313
E-Mail: kevin@streamlineing.com Fax: 916-652-1941

LICENSED PROFESSIONAL ENGINEER STEVE MARQUIS C 69672 EXP. 6/30/12 CIVIL STATE OF CALIFORNIA

at&t
4430 ROSEWOOD DR, BLDG 3, 6TH FLOOR

SHEET TITLE:
TITLE

SHEET NUMBER:
T-1

ROJECT GENERAL NOTES

THIS FACILITY IS AN UNOCCUPIED WIRELESS TELECOMMUNICATION FACILITY.

PLANS ARE NOT TO BE SCALED AND ARE INTENDED TO BE A DIAGRAMMATIC OUTLINE ONLY UNLESS NOTED OTHERWISE.

THE SCOPE OF WORK SHALL INCLUDE FURNISHING MATERIALS, EQUIPMENT, APPURTENANCES AND LABOR NECESSARY TO COMPLETE ALL INSTALLATIONS AS INDICATED ON THE DRAWINGS.

PRIOR TO THE SUBMISSION OF BIDS, THE CONTRACTORS SHALL VISIT THE JOB SITE AND BE RESPONSIBLE FOR ALL CONTRACT DOCUMENTS, FIELD CONDITIONS AND DIMENSIONS, AND CONFIRM THAT THE WORK MAY BE ACCOMPLISHED AS SHOWN PRIOR TO PROCEEDING WITH CONSTRUCTION. ANY DISCREPANCIES ARE TO BE BROUGHT TO THE ATTENTION OF THE CONSTRUCTION MANAGER AND ENGINEER PRIOR TO PROCEEDING WITH THE WORK.

IT IS THE RESPONSIBILITY OF THE CONTRACTOR TO PAY FOR PERMIT FEES AND TO OBTAIN SAID PERMITS AND TO COORDINATE INSPECTIONS.

THE CONTRACTOR SHALL RECEIVE, IN WRITING, AUTHORIZATION TO PROCEED BEFORE STARTING WORK ON ANY ITEM NOT CLEARLY DEFINED OR IDENTIFIED BY THE CONTRACT DOCUMENTS.

CALL BEFORE YOU DIG. CONTRACTOR IS REQUIRED TO CALL 811 (NATIONWIDE "CALL BEFORE YOU DIG" HOTLINE) AT LEAST 72 HOURS BEFORE DIGGING.

ALL WORK PERFORMED AND MATERIALS INSTALLED SHALL BE IN STRICT ACCORDANCE WITH ALL APPLICABLE CODES, REGULATIONS, AND ORDINANCES. CONTRACTOR SHALL GIVE ALL NOTICES AND COMPLY WITH ALL LAWS, ORDINANCES, RULES, REGULATIONS AND LAWFUL ORDERS OF ANY PUBLIC AUTHORITY REGARDING THE PERFORMANCE OF THE WORK.

THE GENERAL CONTRACTOR SHALL SUPERVISE AND DIRECT THE WORK USING THE BEST SKILLS AND ATTENTION. THE CONTRACTOR SHALL BE SOLELY RESPONSIBLE FOR ALL CONSTRUCTION MEANS, METHODS, TECHNIQUES, SEQUENCES AND PROCEDURES. CONTRACTOR SHALL ALSO COORDINATE ALL PORTIONS OF THE WORK UNDER THE CONTRACT; INCLUDING CONTACT AND COORDINATION WITH THE CONSTRUCTION MANAGER AND WITH THE LANDLORD'S AUTHORIZED REPRESENTATIVE.

. THE CONTRACTOR SHALL MAKE NECESSARY PROVISIONS TO PROTECT EXISTING IMPROVEMENTS, PAVING, CURBS, GALVANIZED SURFACES, ETC., AND UPON COMPLETION OF WORK, REPAIR ANY DAMAGE THAT OCCURRED DURING CONSTRUCTION TO THE SATISFACTION OF THE PROJECT MANAGER.

. KEEP GENERAL AREA CLEAN, HAZARD FREE, AND DISPOSE OF ALL DIRT, DEBRIS, RUBBISH AND REMOVE EQUIPMENT NOT SPECIFIED AS REMAINING ON THE PROPERTY, LEAVE PREMISES IN CLEAN CONDITION AND FREE FROM PAINT SPOTS, DUST, OR SMUDGES OF ANY NATURE.

. ALL EXISTING INACTIVE SEWER, WATER, GAS, ELECTRIC, AND OTHER UTILITIES, WHICH INTERFERE WITH THE EXECUTION OF THE WORK, SHALL BE REMOVED AND/OR CAPPED, PLUGGED, OR OTHERWISE DISCONNECTED AT POINTS WHICH WILL NOT INTERFERE WITH THE EXECUTION OF THE WORK, AS DIRECTED BY THE RESPONSIBLE ENGINEER, AND SUBJECT TO THE APPROVAL OF THE OWNER AND/OR LOCAL UTILITIES.

. ALL EXISTING ACTIVE SEWER, WATER, GAS, ELECTRIC AND ALL OTHER UTILITIES WHERE ENCOUNTERED IN THE WORK SHALL BE PROTECTED AT ALL TIMES.

. DETAILS ARE INTENDED TO SHOW END RESULT OF DESIGN. MINOR MODIFICATIONS MAY BE REQUIRED TO SUIT JOB DIMENSIONS OR CONDITIONS, AND SUCH MODIFICATIONS SHALL BE INCLUDED AS PART OF THE WORK.

. CONTRACTOR SHALL PROVIDE A TOILET FACILITY DURING ALL PHASES OF CONSTRUCTION.

. SUFFICIENT MONUMENTATION WAS NOT RECOVERED TO ESTABLISH THE POSITION OF THE BOUNDARY LINES SHOWN HEREON. THE BOUNDARY REPRESENTED ON THIS MAP IS BASED ON COMPILED RECORD DATA AND BEST FIT ONTO EXISTING IMPROVEMENTS. IT IS POSSIBLE FOR THE LOCATION OF THE SUBJECT PROPERTY TO SHIFT FROM THE PLACEMENT SHOWN HEREON WITH ADDITIONAL FIELD WORK AND RESEARCH. THEREFORE ANY SPATIAL REFERENCE MADE OR SHOWN BETWEEN THE RELATIONSHIP OF THE BOUNDARY LINES SHOWN HEREON AND EXISTING GROUND FEATURES, EASEMENTS OR LEASE AREA IS INTENDED TO BE APPROXIMATE AND IS SUBJECT TO VERIFICATION BY RESOLVING THE POSITION OF THE BOUNDARY LINES.

. CONTRACTOR TO VERIFY THE LATEST/CURRENT RF DESIGN.

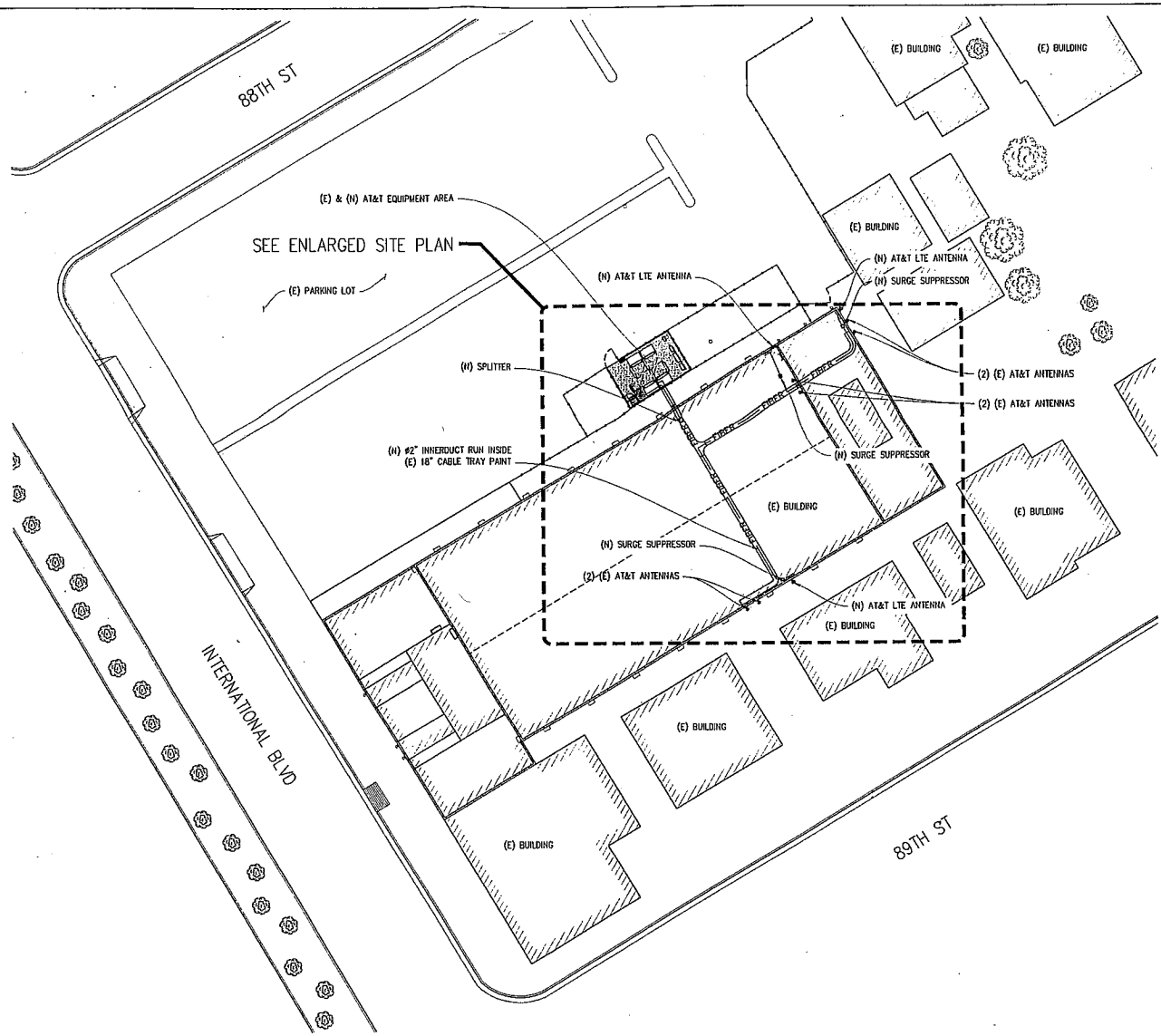

SITE PLAN

1"=15'

0 15' 30' 45' 75'

INTERNATION
BLVD & 92N

CNU2067
8829 INTERNATIONAL
OAKLAND, CA 9462

ISSUE STAT

△	DATE	DESCRIPTIO
	06/22/10	CD 90%
	06/23/10	CD 100%
	10/25/10	CLIENT RE
	-	-
	-	-
	-	-

DRAWN BY: G. TIBBET
CHECKED BY: L. HOUGH
APPROVED BY: S. MARO
DATE: 10/25/1

Streamline Engineering
3268 Penryn Rd, Suite 200 Loomis, CA 95650
Contact: Kevin Sorensen Phone: 916-660-1930

C 69672
EXP.6/30/12
CIVIL
STATE OF CALIFORNIA

at&t

SHEET TITLE:
SITE PLAN
SHEET NUMBER
A-1

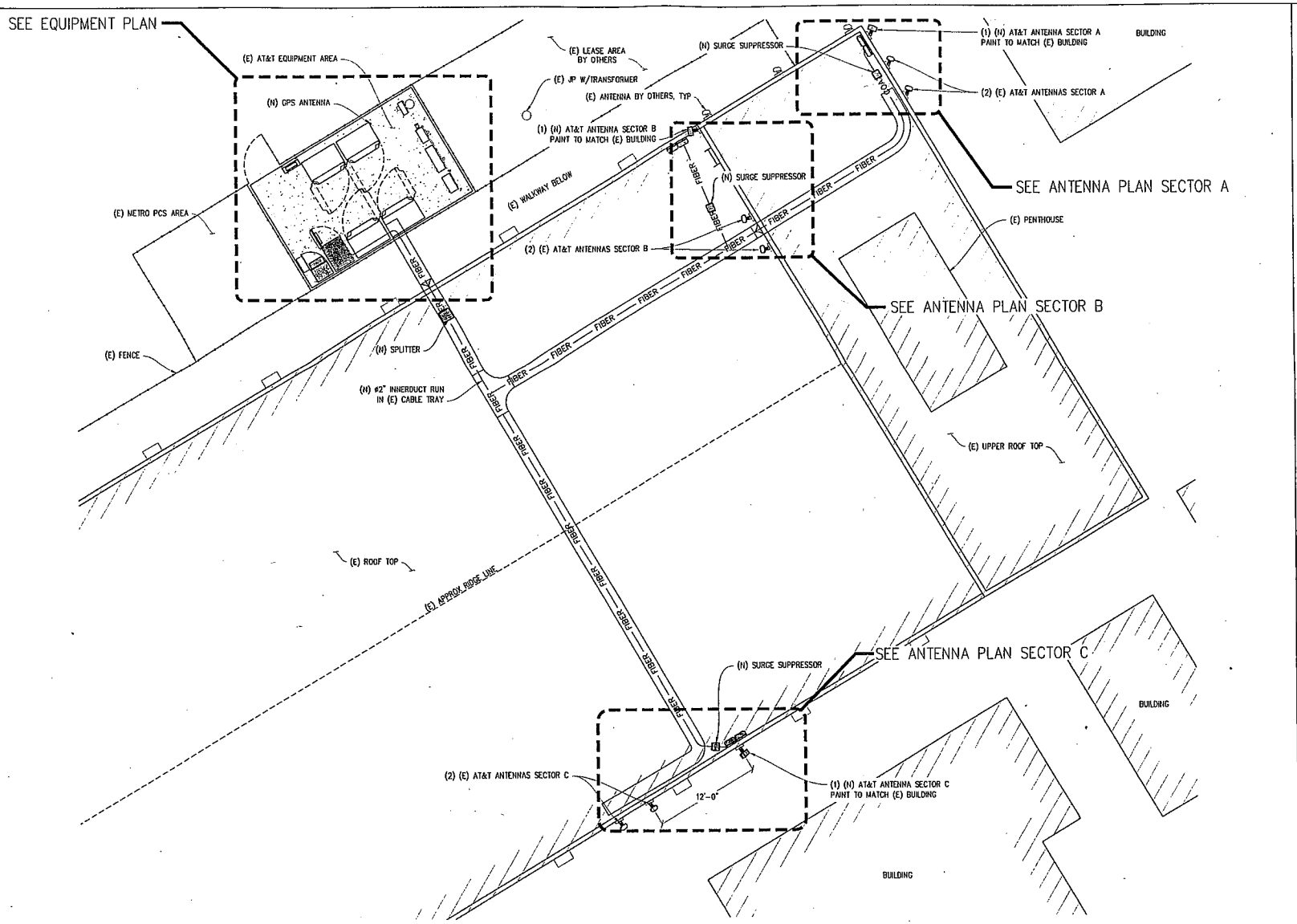

ENLARGED SITE PLAN

1"=5'

0 1' 2' 3' 4' 5' 10' 15' 25'

INTERNATIO
BLVD & 92N

CNU2067
8820 INTERNATIONAL
OAKLAND, CA 9462

ISSUE STAT

△	DATE	DESCRIPTIO
	06/22/10	CD 90%
	06/23/10	CD 100%
	10/25/10	CLIENT RE
	-	-
	-	-
	-	-

DRAWN BY: G. TIBBE
CHECKED BY: L. HOUG
APPROVED BY: S. MARQ
DATE: 10/25/1

Streamline Engineering and Design, Inc.
3289 Penryn Rd. Suite 200 Loomis, CA 95650
Contact: Kevin Sorensen Phone: 916-660-1930

LICENSED PROFESSIONAL ENGINEER
STEVE MARQUEZ
C 69572
EXP. 6/30/12
CIVIL
STATE OF CALIFORNIA

at&t

SHEET TITLE
ENLARGED SITE

SHEET NUMBE
A-2

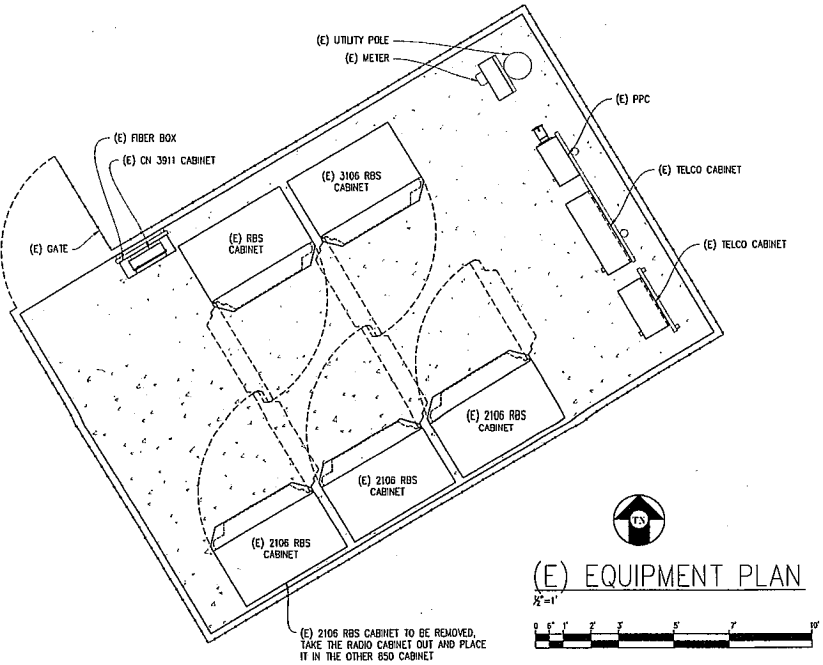

(E) EQUIPMENT PLAN

½"=1'

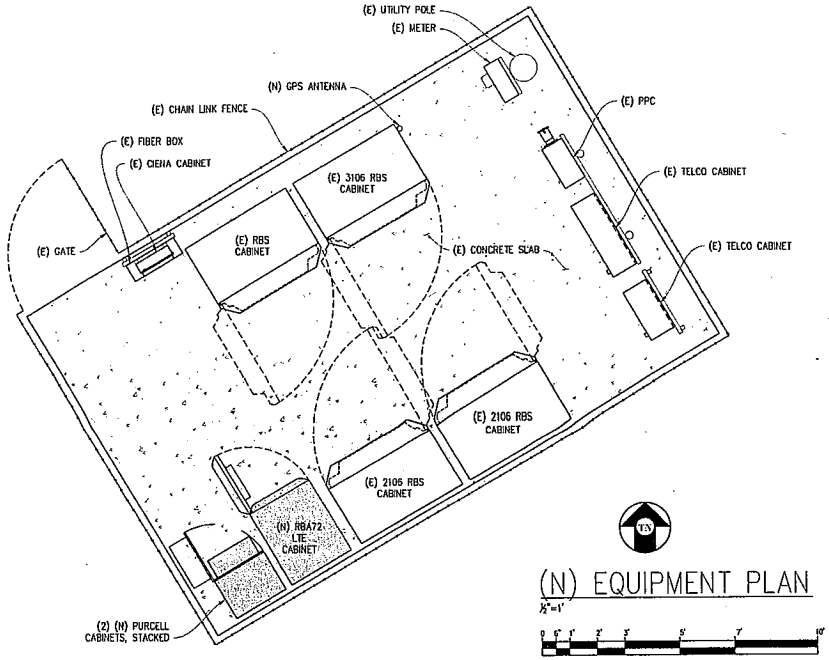

(N) EQUIPMENT PLAN

½"=1'

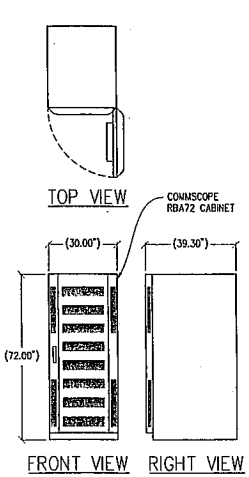

① CABINET DETAIL

½"=1'-0"

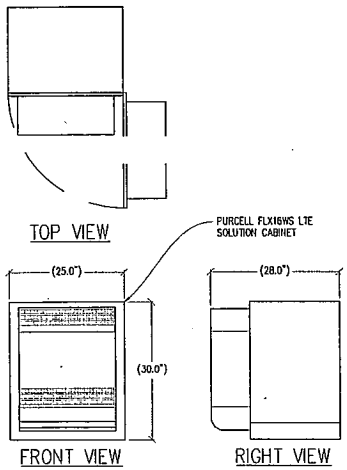

② RBS DETAIL

1"=1'-0"

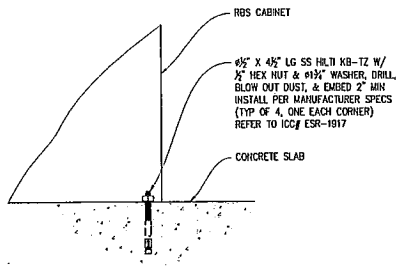

③ CABINET ANCHORING DETAIL

1"=6"

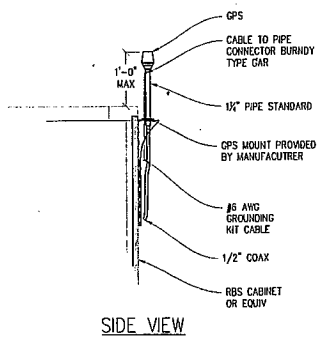

④ GPS ANTENNA MOUNT DETAIL

1"=1'-0"

INTERNATION
BLVD & 92N

CNU2067
8820 INTERNATIONAL
OAKLAND, CA 9462

ISSUE STAT

Δ	DATE	DESCRIPTIO
	06/22/10	CD 90%
	06/23/10	CD 100%
	10/25/10	CLIENT RE
	–	–
	–	–
	–	–

DRAWN BY: G. TIBBE
CHECKED BY: L. HOUG
APPROVED BY: S. MARO
DATE: 10/25/1

Streamline Engineering
3288 Penryn Rd, Suite 200 Loomis, CA 95650
Contact: Kevin Sorensen Phone: 916-660-1930

LICENSED PROFESSIONAL ENGINEER
STEVE MARQUEZ
C 69572
EXP.6/30/12
CIVIL
STATE OF CALIFORNIA

at&t

SHEET TITLE:
EQUIPMENT PI
& DETAILS

SHEET NUMBER
A-3

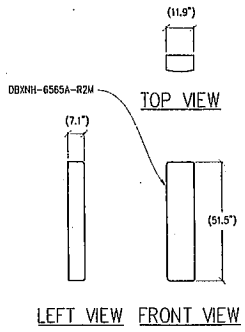

1 ANTENNA DETAIL
½"=1'

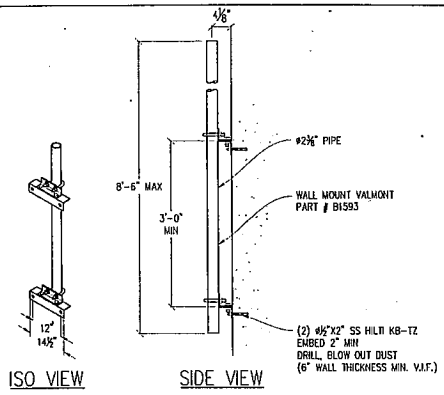

2 WALL MOUNT DETAIL
1"=1'

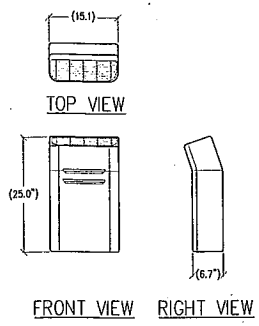

3 RRUW-01 DETAIL
1"=1'-0"
ERICSSON RRUW-01

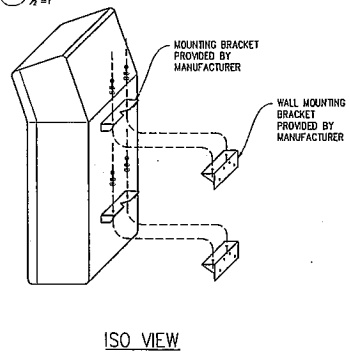

4 RRUW MOUNTING DETAIL
NOT TO SCALE

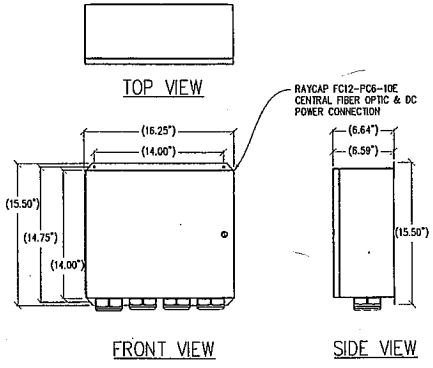

5 SPLICE BOX DETAIL
1"=6"

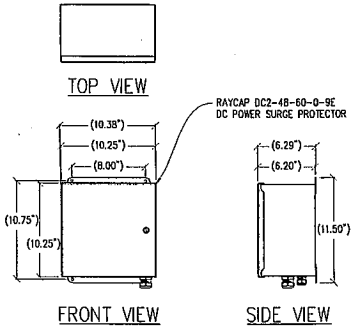

6 DC SURGE SUPPRESSION DETAIL
1"=6"

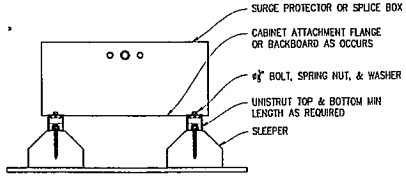

7 CABINET ON SLEEPER MOUNT DETAIL
1"=6"

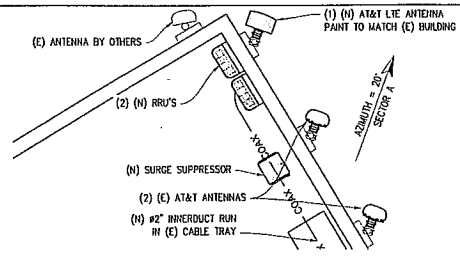

ANTENNA PLAN SECTOR A
½"=1'
NOTE: MOVE POSITION 1 TO POSITION 3 AND INSTALL (N) ANTENNA AT POSITION 1

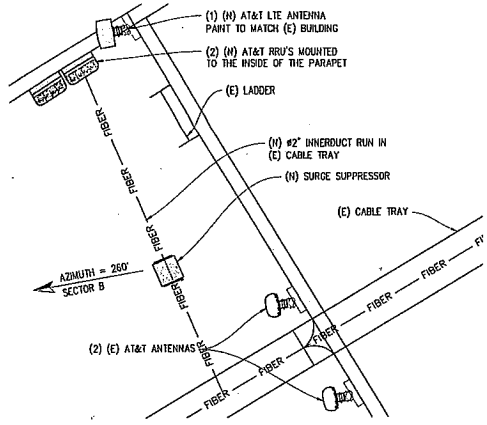

ANTENNA PLAN SECTOR B
½"=1'

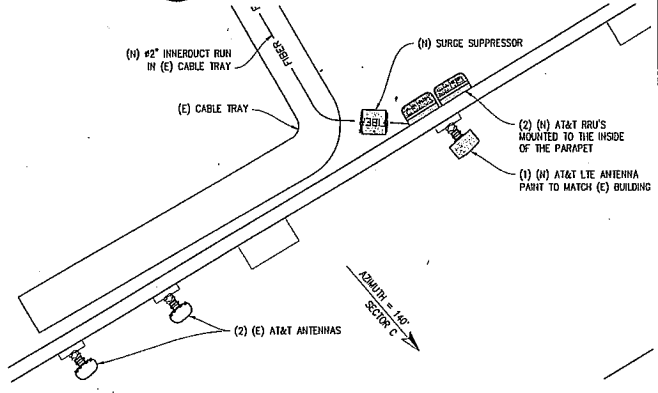

ANTENNA PLAN SECTOR C
½"=1'

INTERNATION
BLVD & 92N

CNU2067
8820 INTERNATIONAL
OAKLAND, CA 9462

ISSUE STAT

Δ	DATE	DESCRIPTIO
	06/22/10	CD 90%
	06/23/10	CD 100%
	10/25/10	CLIENT RE
	-	-
	-	-
	-	-

DRAWN BY: G. TIBBET
CHECKED BY: L. HOUGH
APPROVED BY: S. MARO
DATE: 10/25/1

Streamline Engineering
3258 Penryn Rd, Suite 200 Loomis, CA 95650
Contact: Kevin Sorensen Phone: 916-660-1930

LICENSED PROFESSIONAL ENGINEER STEVE WARDEN C 69672 EXP.6/30/12 CIVIL STATE OF CALIFORNIA

at&t

SHEET TITLE:
ANTENNA PLA
& DETAILS
SHEET NUMBER
A-4

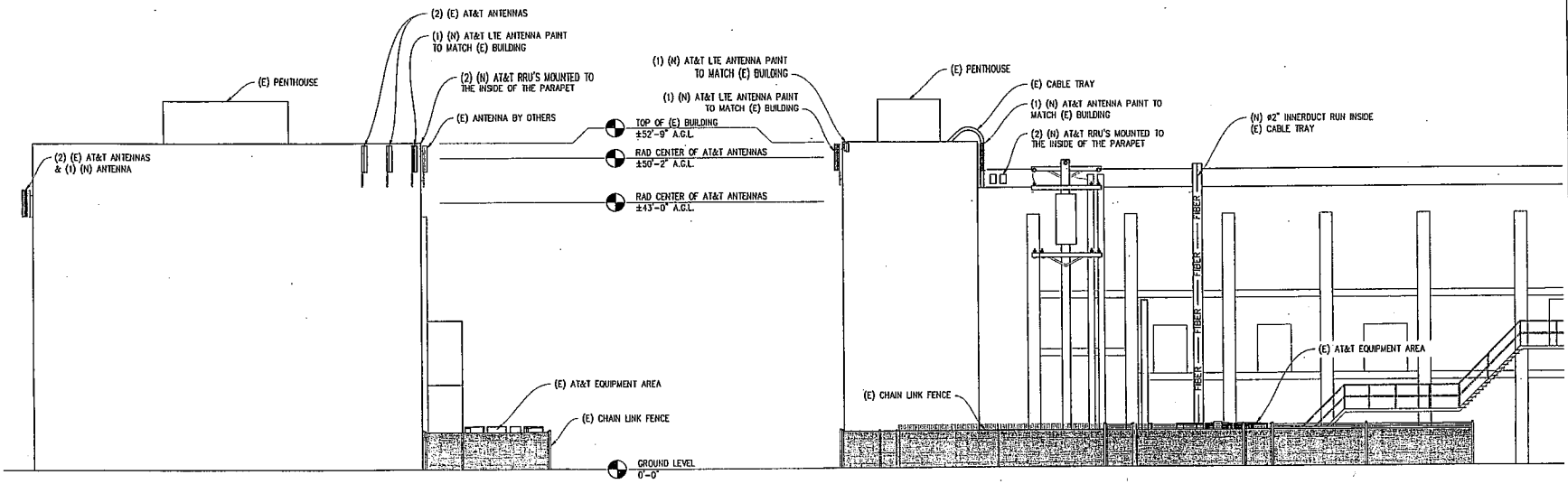

NORTHEAST ELEVATION

1/8"=1'

NOTE: MOVE POSITION 1 ANTENNA TO POSITION 3 AND PLACE (N) ANTENNA IN POSITION 1

NORTHWEST ELEVATION

1/8"=1'

INTERNATION
BLVD & 92N

CNU2067
8820 INTERNATIONAL B
OAKLAND, CA 94621

ISSUE STAT

△	DATE	DESCRIPTIO
	06/22/10	CD 90%
	06/23/10	CD 100%
	10/25/10	CLIENT REV
	--	--
	--	--
	--	--

DRAWN BY: C. TIBBET
CHECKED BY: L. HOUGH
APPROVED BY: S. MAROU
DATE: 10/25/10

Streamline Engineering and Design, Inc.
3268 Penryn Rd, Suite 200 Loomis, CA 95650
Contact: Kevin Sorensen Phone: 916-660-1930
E-Mail: kevin@streamlineinc.com Fax: 916-660-1941

LICENSED PROFESSIONAL ENGINEER
STEVE MAXWELL
C 69672
EXP.6/30/12
CIVIL
STATE OF CALIFORNIA

at&t

SHEET TITLE:
ELEVATIONS

SHEET NUMBER
A-5

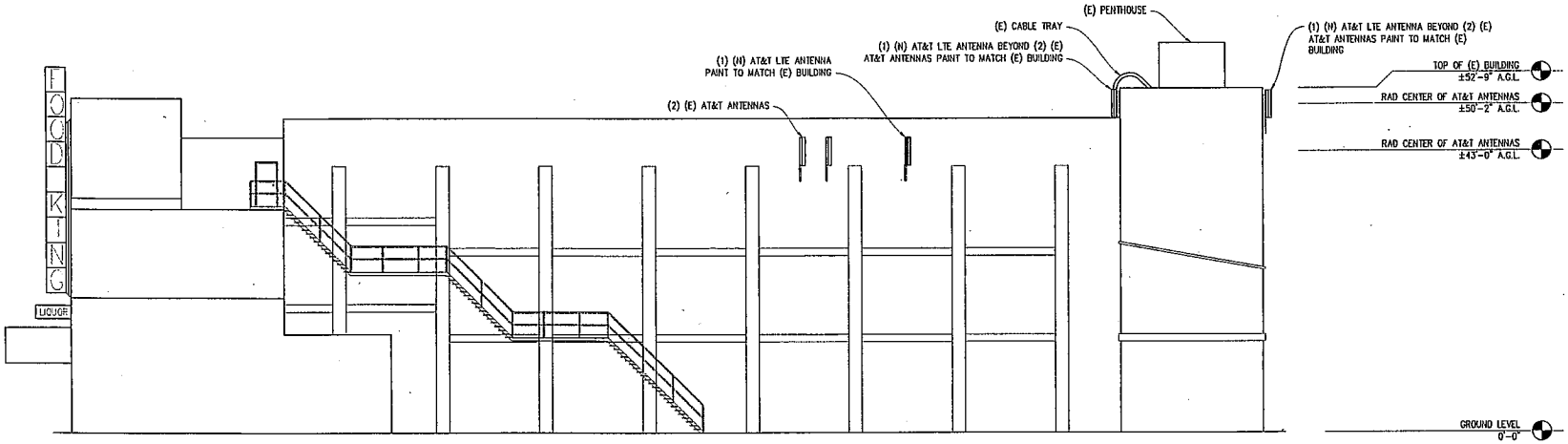

SOUTHEAST ELEVATION

1/8"=1'

INTERNATION
BLVD & 92N

CNU2067
8820 INTERNATIONAL
OAKLAND, CA 9462

ISSUE STAT

△	DATE	DESCRIPTIO
	06/22/10	CD 90%
	06/23/10	CD 100%
	10/25/10	CLIENT RE
	-	-
	-	-
	-	-

DRAWN BY: G. TIBBET
CHECKED BY: L. HOUGI
APPROVED BY: S. MARO
DATE: 10/25/1

Streamline Engineering and Design, Inc.
3268 Penryn Rd, Suite 200 Loomis, CA 95650
Contact: Kevin Sorensen Phone: 916-660-1930
E-Mail: kevin@streamlineengr.com Fax: 916-660-1941

LICENSED PROFESSIONAL ENGINEER
STEVE MARONDE
C 69572
EXP.6/30/12
CIVIL
STATE OF CALIFORNIA

at&t

SHEET TITLE:
ELEVATION

SHEET NUMBER
A-6

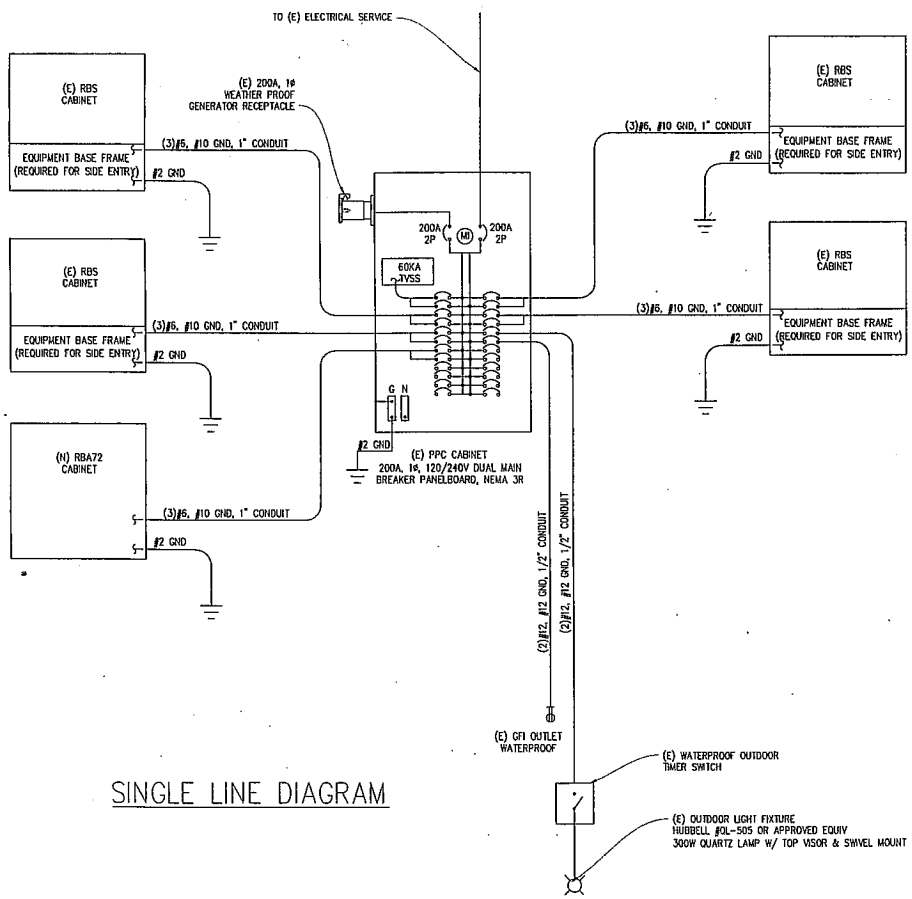

SINGLE LINE DIAGRAM

ELECTRIC LEGEND

- MI — MECHANICAL INTERLINK
- M — METER
- CIRCUIT BREAKER
- SERVICE GROUND
- WIRED CONNECTION
- TIMER SWITCH, WATERPROOF
- OUTDOOR LIGHT
- GFI OUTLET, WATERPROOF

ELECTRICAL NOTES

1. ALL ELECTRICAL WORK SHALL CONFORM TO THE NEC AS WELL AS ALL APPLICABLE STATE AND LOCAL CODES.
2. CONTRACTOR SHALL FURNISH AND INSTALL ALL CONDUIT, CONDUCTORS, PULL BOXES, TRANSFORMER PADS, POLE RISERS, AND PERFORM ALL TRENCHING AND BACKFILLING REQUIRED IN THE PLANS.
3. ALL ELECTRICAL ITEMS SHALL BE U.L. APPROVED OR LISTED AND PROCURED PER PLAN SPECIFICATIONS.
4. ALL CIRCUIT BREAKERS, FUSES, AND ELECTRICAL EQUIPMENT SHALL HAVE AN INTERRUPTION RATING NOT LESS THAN THE MAXIMUM SHORT CIRCUIT CURRENT TO WHICH THEY MAY BE SUBJECTED WITH A MINIMUM OF 10,000 A.I.C. OR AS REQUIRED.
5. THE ENTIRE ELECTRICAL INSTALLATION SHALL BE GROUNDED AS REQUIRED BY ALL APPLICABLE CODES.
6. ELECTRICAL WIRING SHALL BE COPPER #12 MIN WITH TYPE XHHW, THWN, OR THHN INSULATION.
7. ALL OUTDOOR EQUIPMENT SHALL HAVE NEMA 3R ENCLOSURE.
8. ALL BURIED WIRE SHALL RUN THROUGH SCHEDULE 40 PVC CONDUIT UNLESS OTHERWISE NOTED.
9. A GROUND WIRE IS TO BE PULLED IN ALL CONDUITS.
10. WHERE ELECTRICAL WIRING OCCURS OUTSIDE A STRUCTURE AND HAS THE POTENTIAL FOR EXPOSURE TO WEATHER, WIRING SHALL BE IN WATERTIGHT GALVANIZED RIGID STEEL OR FLEXIBLE CONDUIT.

PANEL SCHEDULE

NAMEPLATE: PANEL A				SC LEVEL: 10,000				VOLTS: 120V/240V, 1ø		
LOCATION : OUTSIDE								BUSS AMPS: 200A		
MOUNTING : H-FRAME								MAIN CB: 200A		
øA LOAD VA	øB LOAD VA	LOAD DESCRIPTION	BKR AMP/ POLE	CIRCUIT NO		BKR AMP/ POLE	LOAD DESCRIPTION	øA LOAD VA	øB LOAD VA
800		SURGE ARRESTOR	60/2	01	02	50/2	(E) RBS CABINET	2,957	
	800	" "	–	03	04	–	" "		2,957
2,957		(E) RBS CABINET	50/2	05	06	50/2	(E) RBS CABINET	2,957	
	2,957	" "	–	07	08	–	" "		2,957
2,957		(E) RBS CABINET	50/2	09	10	20/1	TECH LIGHT	300	
	2,957	" "	–	11	12	20/1	GFI RECEPTACLE		800
2,619		(N) RBA72 CABINET	60/2	13	14		SPARE		
	2,619	" "	–	15	16				
		SPARE	100/2	17	18				
			–	19	20				
			20/1	21	22				
				23	24				
9,333	9,333	PHASE TOTALS					PHASE TOTALS	6,214	6,714
TOTAL VA = 31,594		TOTAL AMPS = 132A							

NOTE: EXISTING LOADS HAVE NOT BEEN FIELD VERIFIED. THEY ARE APPROXIMATE BASED ON EXISTING CB SIZES. CONTACT THE ENGINEER IF THE LOADS DIFFER FROM THAT WHICH IS SHOWN ON THE PLANS

INTERNATIO
BLVD & 92N

CNU2067
8820 INTERNATIONAL
OAKLAND, CA 9462

ISSUE STAT

△	DATE	DESCRIPTIO
	06/22/10	CD 90%
	06/23/10	CD 100%
	10/25/10	CLIENT RE
	–	–
	–	–
	–	–

DRAWN BY: G. TIBBE
CHECKED BY: L. HOUG
APPROVED BY: S. MARO
DATE: 10/25/1

Streamline Engineering and Design Inc.
3268 Penryn Rd. Suite 200 Loomis, CA 95650
Contact: Kevin Sorensen, Phone: 916-660-1930

LICENSED PROFESSIONAL ENGINEER
STEVE MARCHESI
C 69672
EXP.6/30/12
CIVIL
STATE OF CALIFORNIA

at&t

SHEET TITLE:
ELECTRICAL PI

SHEET NUMBER
E-1

ATTACHMENT A

Existing

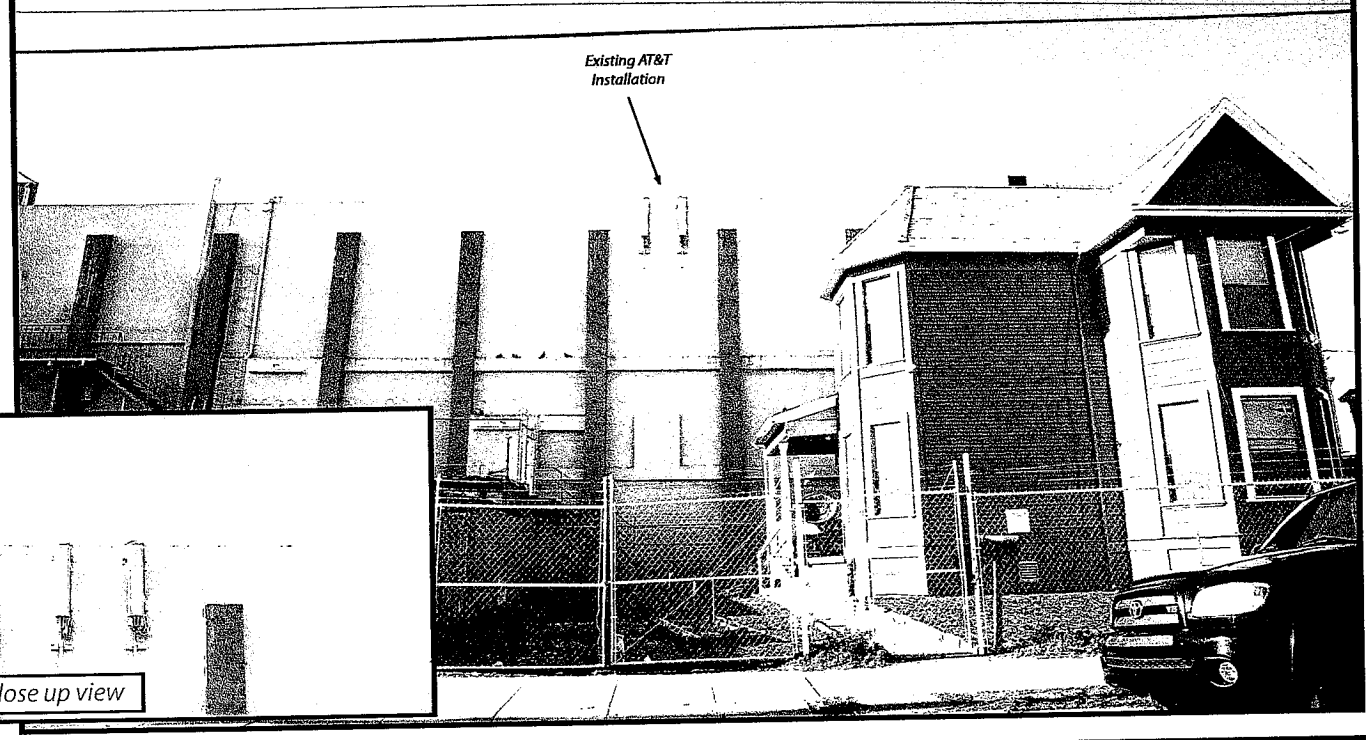

Proposed

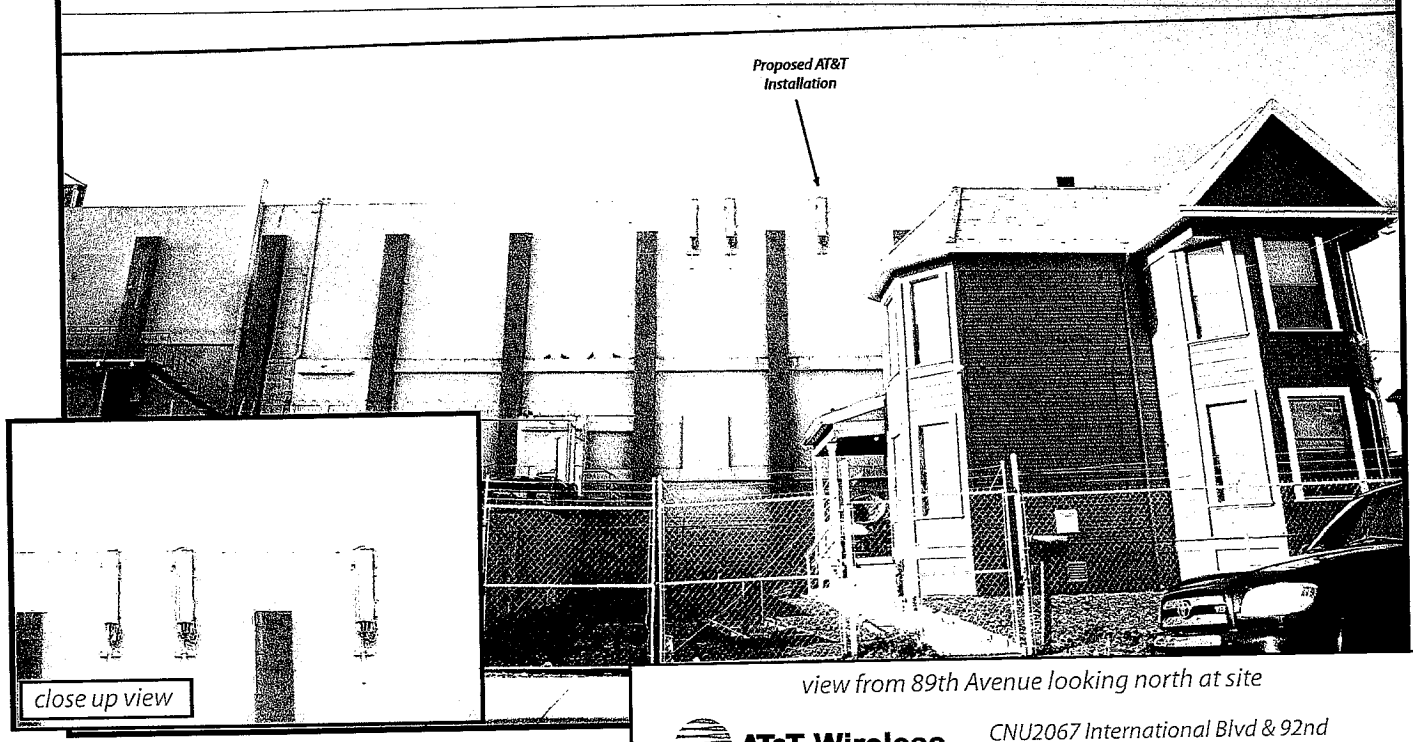

view from 89th Avenue looking north at site

AT&T Wireless

CNU2067 International Blvd & 92nd
8820 International Blvd, Oakland, CA

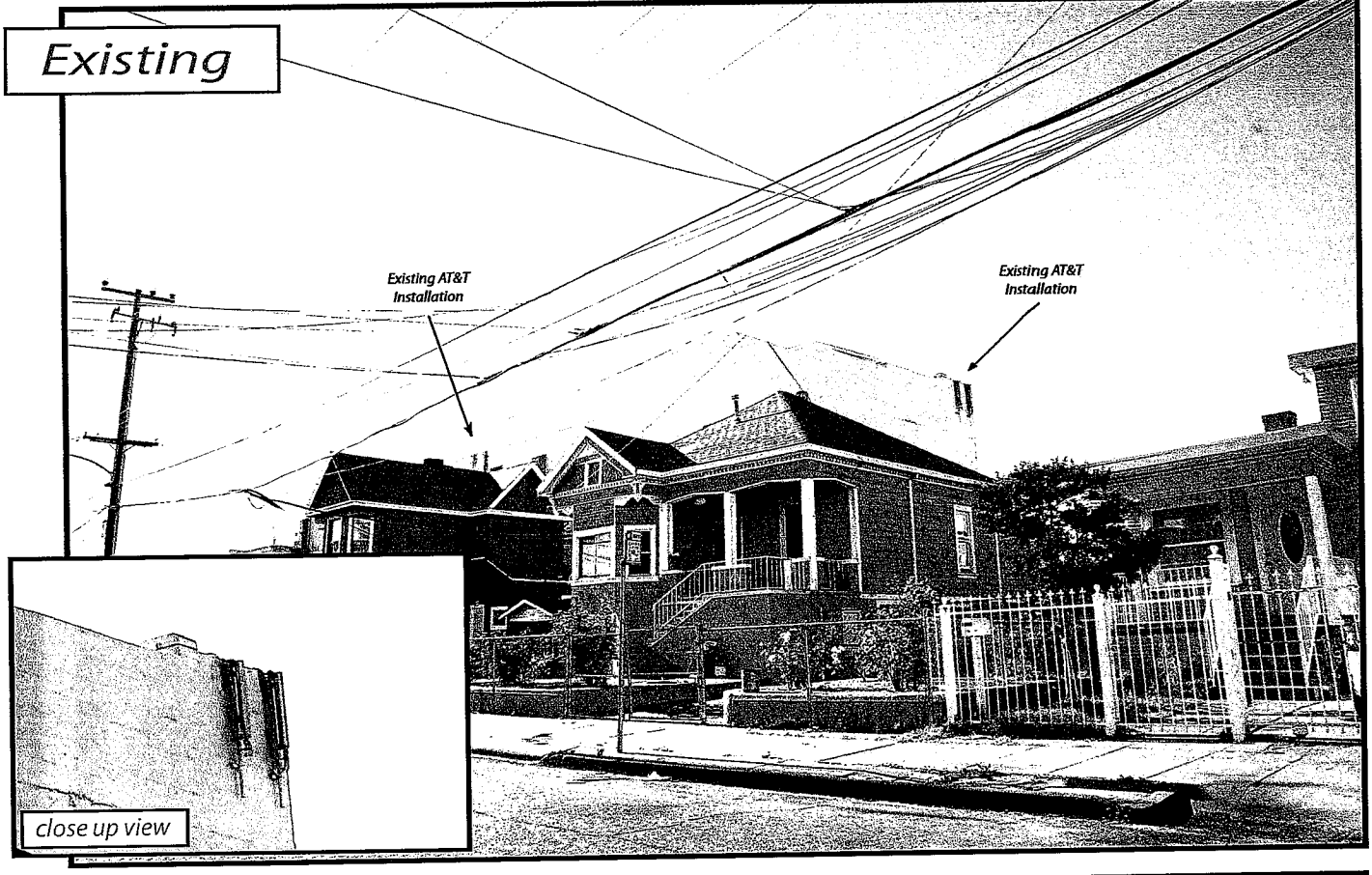

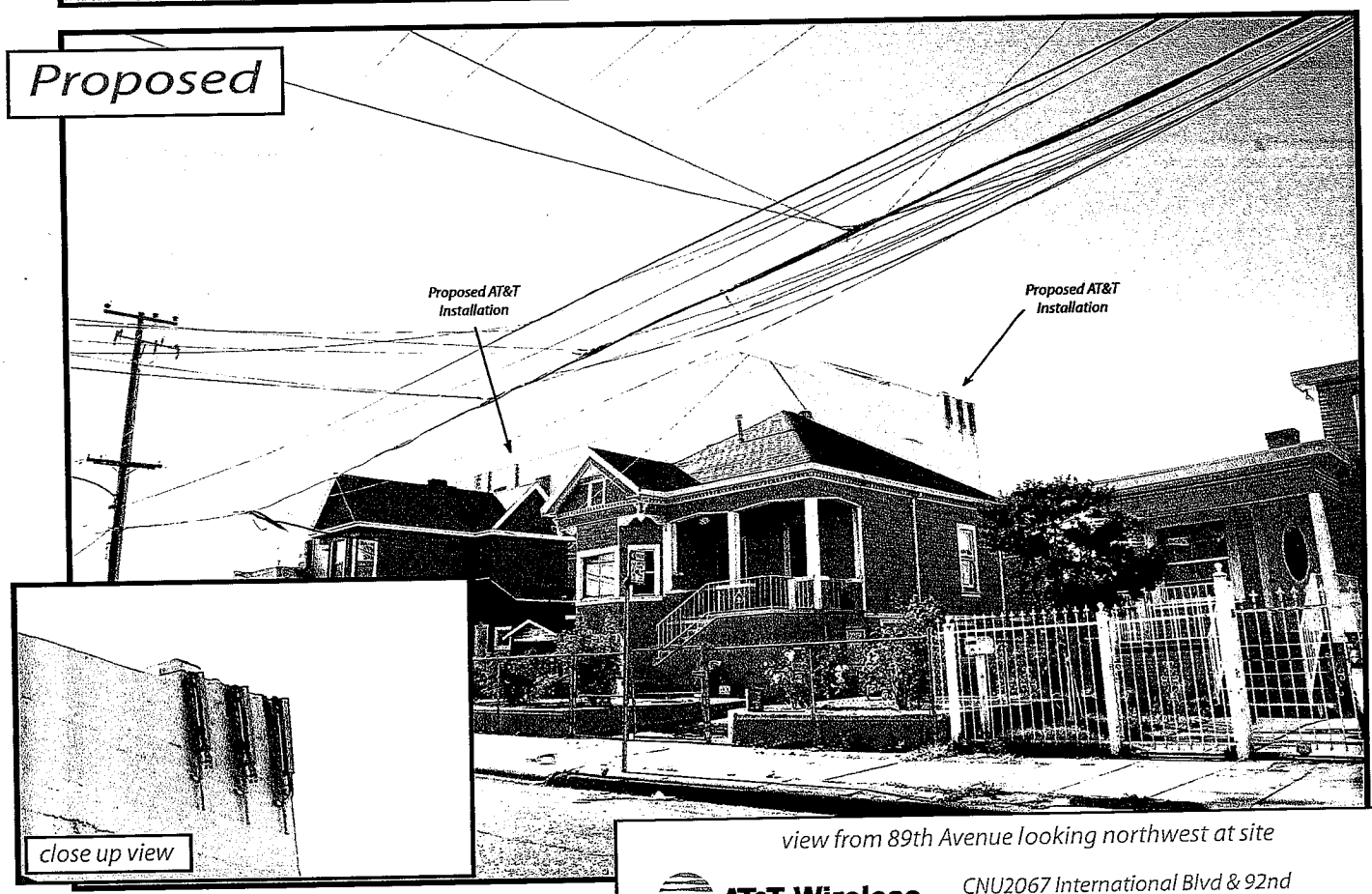

view from 89th Avenue looking northwest at site

AT&T Wireless

CNU2067 International Blvd & 92nd
8820 International Blvd, Oakland, CA

Advance

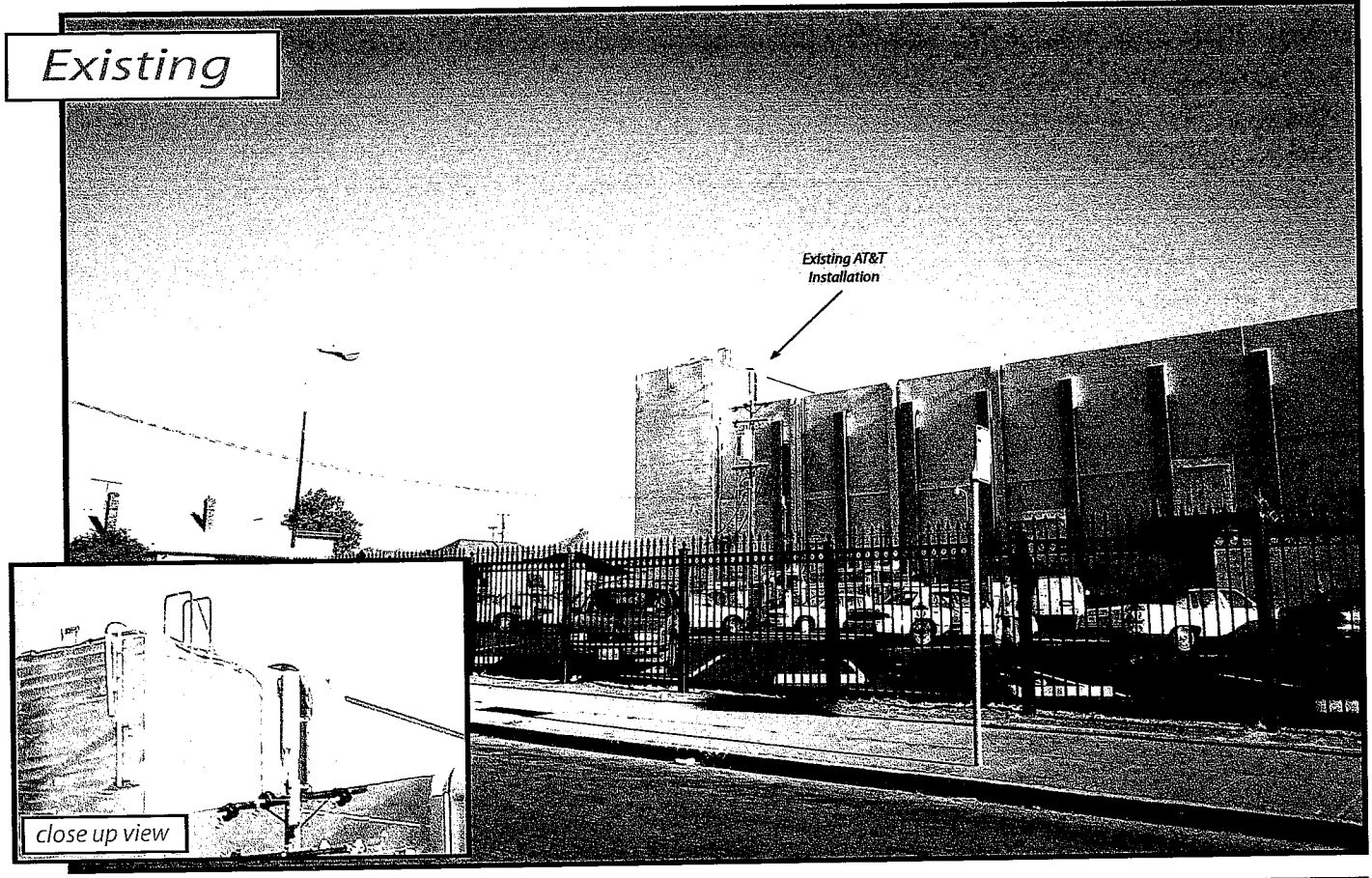

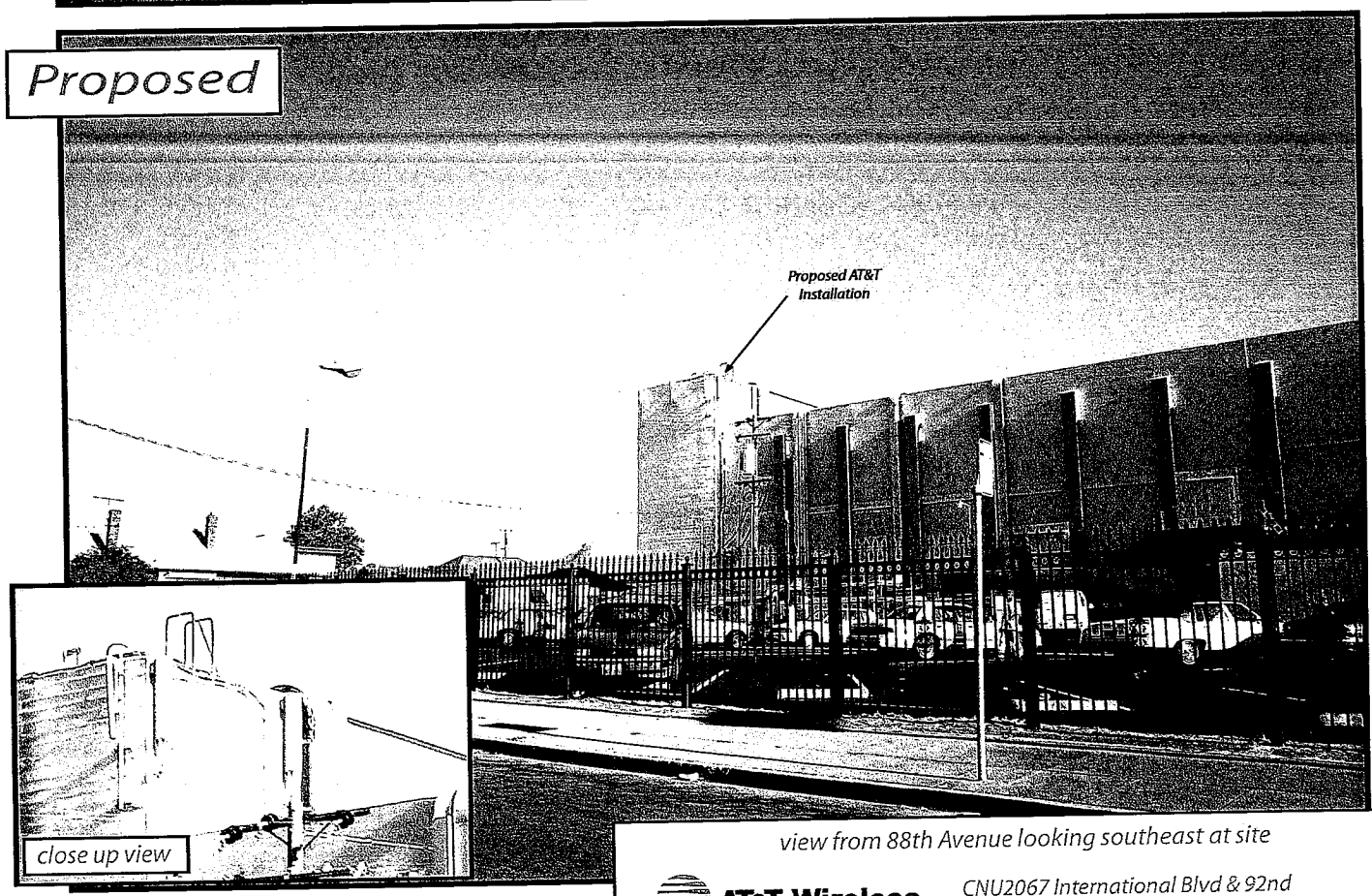

view from 88th Avenue looking southeast at site

AT&T Wireless

CNU2067 International Blvd & 92nd
8820 International Blvd, Oakland, CA

Radio Frequency – Electromagnetic Energy (RF-EME) Compliance Report

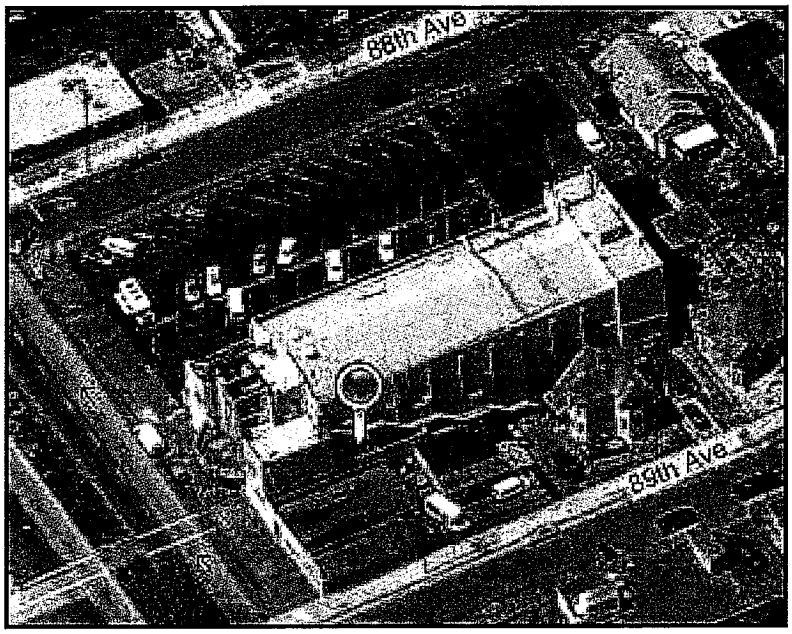

Prepared for:
AT&T Mobility, LLC
c/o The Lyle Company
3140 Gold Camp Drive Suite 30
Rancho Cordova, CA 95670

USID# 47116
Site No. CNU2067
AWE - International Blvd & 92Nd
8820 International Blvd
Oakland, California 94621
Alameda County
37.750650; -122.174760 NAD83

EBI Project No. 62101520
October 22, 2010

EBI CONSULTING
Creating Value for Your Business

TABLE OF CONTENTS

EXECUTIVE SUMMARY 1
1.0 SITE DESCRIPTION 3
2.0 FEDERAL COMMUNICATIONS COMMISSION (FCC) REQUIREMENTS 3
3.0 AT&T RF EXPOSURE POLICY REQUIREMENTS 5
4.0 WORST-CASE PREDICTIVE MODELING 5
5.0 RECOMMENDED SIGNAGE/COMPLIANCE PLAN 7
6.0 SUMMARY AND CONCLUSIONS 8
7.0 LIMITATIONS 8

APPENDICES

Appendix A Personnel Certifications
Appendix B Antenna Inventory
Appendix C RoofView® Export File
Appendix D RoofView® Graphic
Appendix E Compliance/Signage Plan

EXECUTIVE SUMMARY

Purpose of Report

EnviroBusiness Inc. (dba EBI Consulting) has been contracted by AT&T Mobility, LLC to conduct radio frequency electromagnetic (RF-EME) modeling for AT&T Site CNU2067 located at 8820 International Blvd in Oakland, California to determine RF-EME exposure levels from proposed AT&T wireless communications equipment at this site. As described in greater detail in Section 2.0 of this report, the Federal Communications Commission (FCC) has developed Maximum Permissible Exposure (MPE) Limits for general public exposures and occupational exposures. This report summarizes the results of RF-EME modeling in relation to relevant FCC RF-EME compliance standards for limiting human exposure to RF-EME fields.

This report contains a detailed summary of the RF EME analysis for the site, including the following:

- Antenna Inventory
- Site Plan with antenna locations
- Antenna inventory with relevant parameters for theoretical modeling
- Graphical representation of theoretical MPE fields based on modeling
- Graphical representation of recommended signage and/or barriers

This document addresses the compliance of AT&T's transmitting facilities independently and in relation to all collocated facilities at the site.

Statement of Compliance

A site is considered out of compliance with FCC regulations if there are areas that exceed the FCC exposure limits <u>and</u> there are no RF hazard mitigation measures in place. Any carrier which has an installation that contributes more than 5% of the applicable MPE must participate in mitigating these RF hazards.

Per AT&T's corporate policy, the FCC's general population limits are applicable to all rooftop sites, regardless of the level of access control. As presented in the sections below, based on worst-case predictive modeling, the worst-case emitted power density may exceed the FCC's general public limit within approximately 12 feet of AT&T's proposed Sector B antennas at the main roof level. Modeling also indicates that the worst-case emitted power density may exceed the FCC's occupational limit within approximately 3 feet of AT&T's proposed Sector B antennas at the main roof level.

AT&T Recommended Signage/Compliance Plan

AT&T's RF Exposure Policy guidance, dated March 31, 2009, requires that:

1. All sites must be analyzed for RF exposure compliance;
2. All sites must have that analysis documented; and
3. All sites must have any necessary signage and barriers installed.

Site compliance recommendations have been developed based upon protocols presented in AT&T's RF Exposure Policy guidance document, dated March 31, 2009, additional guidance provided by AT&T, EBI's understanding of FCC and OSHA requirements, and common industry practice. Barrier locations have been identified (when required) based on guidance presented in AT&T's RF Exposure Policy guidance document, dated March 31, 2009. The following signage is recommended at this site:

- Green INFO 1 sign posted on or next to the roof access point.
- INFO 2 signs posted horizontally on the parapet above the Sector A and C antennas.
- INFO 4 signs posted on the side of the Sector A and C antennas.
- Yellow CAUTION sign posted near the Sector B antennas.

The signage proposed for installation at this site complies with AT&T's RF Exposure Policy and therefore complies with FCC and OSHA requirements. Barriers are recommended for this site. More detailed information concerning site compliance recommendations is presented in Section 5.0 and Appendix E of this report.

1.0 SITE DESCRIPTION

This project involves the proposed installation of up to nine (9) wireless telecommunication antennas on a rooftop in Oakland, California. There are three Sectors (A, B, and C) proposed at the site, with three (3) antennas that may be installed per sector. In each sector, there is proposed to be one GSM antenna transmitting in the 850 MHz and the 1900 MHz frequency ranges, one LTE antenna transmitting in the 700 MHz and 1710 MHz frequency ranges and one UMTS antenna transmitting in the 850 MHz and 1900 MHz frequency ranges, with two bands transmitting at 1900 MHz. The Sector A antennas will be oriented 20° from true north. The Sector B antennas will be oriented 260° from true north. The Sector C antennas will be oriented 140° from true north. The bottoms of the LTE antennas in Sectors A and C will be 48.06 feet above ground level. The bottoms of the GSM antennas in Sectors A and C will be 48.01 feet above ground level. The bottoms of the UMTS antennas in Sectors A and C will be 48 feet above ground level. The antennas in Sector B will be transmitting over the main roof. The bottoms of the LTE antennas in Sector B will be 3.385 feet above the rooftop. The bottoms of the GSM antennas in Sector B will be 3.34 feet above the rooftop. The bottoms of the UMTS antennas in Sector B will be 3.33 feet above the roof. Appendix B presents an antenna inventory for the site..

Access to this site is unknown. To be conservative, it is assumed that the general public is able to access the roof.

2.0 FEDERAL COMMUNICATIONS COMMISSION (FCC) REQUIREMENTS

The FCC has established Maximum Permissible Exposure (MPE) limits for human exposure to Radiofrequency Electromagnetic (RF-EME) energy fields, based on exposure limits recommended by the National Council on Radiation Protection and Measurements (NCRP) and, over a wide range of frequencies, the exposure limits developed by the Institute of Electrical and Electronics Engineers, Inc. (IEEE) and adopted by the American National Standards Institute (ANSI) to replace the 1982 ANSI guidelines. Limits for localized absorption are based on recommendations of both ANSI/IEEE and NCRP.

The FCC guidelines incorporate two separate tiers of exposure limits that are based upon occupational/controlled exposure limits (for workers) and general public/uncontrolled exposure limits for members of the general public.

Occupational/controlled exposure limits apply to situations in which persons are exposed as a consequence of their employment and in which those persons who are exposed have been made fully aware of the potential for exposure and can exercise control over their exposure. Occupational/ controlled exposure limits also apply where exposure is of a transient nature as a result of incidental passage through a location where exposure levels may be above general public/uncontrolled limits (see below), as long as the exposed person has been made fully aware of the potential for exposure and can exercise control over his or her exposure by leaving the area or by some other appropriate means.

General public/uncontrolled exposure limits apply to situations in which the general public may be exposed or in which persons who are exposed as a consequence of their employment may not be made fully aware of the potential for exposure or cannot exercise control over their exposure. Therefore, members of the general public would always be considered under this category when exposure is not employment-related, for example, in the case of a telecommunications tower that exposes persons in a nearby residential area.

Table 1 and Figure 1 (below), which are included within the FCC's OET Bulletin 65, summarize the MPE limits for RF emissions. These limits are designed to provide a substantial margin of safety. They vary

by frequency to take into account the different types of equipment that may be in operation at a particular facility and are "time-averaged" limits to reflect different durations resulting from controlled and uncontrolled exposures.

The FCC's MPEs are measured in terms of power (mW) over a unit surface area (cm^2). Known as the power density, the FCC has established an occupational MPE of 5 milliwatts per square centimeter (mW/cm^2) and an uncontrolled MPE of 1 mW/cm2 for equipment operating in the 1900 MHz frequency range. For the AT&T equipment operating at 850 MHz, the FCC's occupational MPE is 2.83 mW/cm^2 and an uncontrolled MPE of 0.57 mW/cm^2. These limits are considered protective of these populations.

Table 1: Limits for Maximum Permissible Exposure (MPE)				
(A) Limits for Occupational/Controlled Exposure				
Frequency Range (MHz)	**Electric Field Strength (E) (V/m)**	**Magnetic Field Strength (H) (A/m)**	**Power Density (S) (mW/cm^2)**	**Averaging Time $[E]^2$, $[H]^2$, or S (minutes)**
0.3-3.0	614	1.63	(100)*	6
3.0-30	1842/f	4.89/f	($900/f^2$)*	6
30-300	61.4	0.163	1.0	6
300-1,500	--	--	f/300	6
1,500-100,000	--	--	5	6
(B) Limits for General Public/Uncontrolled Exposure				
Frequency Range (MHz)	**Electric Field Strength (E) (V/m)**	**Magnetic Field Strength (H) (A/m)**	**Power Density (S) (mW/cm^2)**	**Averaging Time $[E]^2$, $[H]^2$, or S (minutes)**
0.3-1.34	614	1.63	(100)*	30
1.34-30	824/f	2.19/f	($180/f^2$)*	30
30-300	27.5	0.073	0.2	30
300-1,500	--	--	f/1,500	30
1,500-100,000	--	--	1.0	30

f = Frequency in (MHz)
* Plane-wave equivalent power density

Figure 1. FCC Limits for Maximum Permissible Exposure (MPE)
Plane-wave Equivalent Power Density

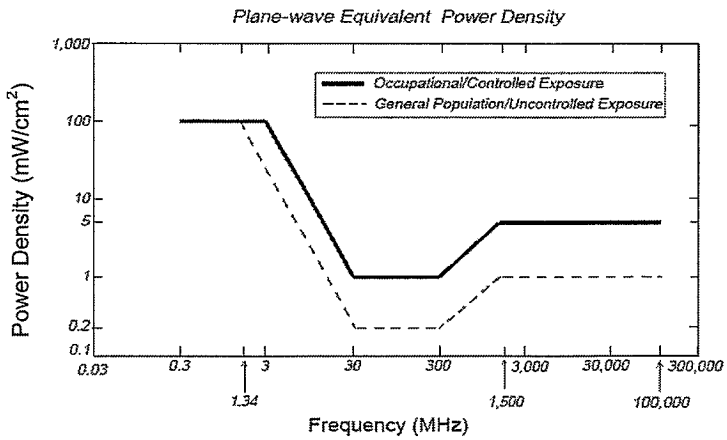

Based on the above, the most restrictive thresholds for exposures of unlimited duration to RF energy for several personal wireless services are summarized below:

Personal Wireless Service	Approximate Frequency	Occupational MPE	Public MPE
Personal Communication (PCS)	1,950 MHz	5.00 mW/cm^2	1.00 mW/cm^2
Cellular Telephone	870 MHz	2.90 mW/cm^2	0.58 mW/cm^2
Specialized Mobile Radio	855 MHz	2.85 mW/cm^2	0.57 mW/cm^2
Most Restrictive Freq, Range	30-300 MHz	1.00 mW/cm^2	0.20 mW/cm^2

MPE limits are designed to provide a substantial margin of safety. These limits apply for continuous exposures and are intended to provide a prudent margin of safety for all persons, regardless of age, gender, size, or health.

Personal Communication (PCS) facilities used by AT&T in this area operate within a frequency range of 850-1900 MHz. Facilities typically consist of: 1) electronic transceivers (the radios or cabinets) connected to wired telephone lines; and 2) antennas that send the wireless signals created by the transceivers to be received by individual subscriber units (PCS telephones). Transceivers are typically connected to antennas by coaxial cables.

Because of the short wavelength of PCS services, the antennas require line-of-site paths for good propagation, and are typically installed above ground level. Antennas are constructed to concentrate energy towards the horizon, with as little energy as possible scattered towards the ground or the sky. This design, combined with the low power of PCS facilities, generally results in no possibility for exposure to approach Maximum Permissible Exposure (MPE) levels, with the exception of areas directly in front of the antennas.

3.0 AT&T RF Exposure Policy Requirements

AT&T's RF Exposure Policy guidance, dated March 31, 2009, requires that:

1. All sites must be analyzed for RF exposure compliance;
2. All sites must have that analysis documented; and
3. All sites must have any necessary signage and barriers installed.

Pursuant to this guidance, worst-case predictive modeling was performed for the site. This modeling is described below in Section 4.0. Lastly, based on the modeling and survey data, EBI has produced a Compliance Plan for this site that outlines the recommended signage and barriers. The recommended Compliance Plan for this site is described in Section 5.0.

4.0 Worst-Case Predictive Modeling

In accordance with AT&T's RF Exposure policy, EBI performed theoretical modeling using RoofView® software to estimate the worst-case power density at the site rooftop and ground-level resulting from operation of the antennas. RoofView® is a widely-used predictive modeling program that has been developed by Richard Tell Associates to predict both near field and far field RF power density values for roof-top and tower telecommunications sites produced by vertical collinear antennas that are typically used in the cellular, PCS, paging and other communications services. The models utilize several operational specifications for different types of antennas to produce a plot of spatially-averaged power densities that can be expressed as a percentage of the applicable exposure limit.

For this report, EBI utilized antenna and power data provided by AT&T, and compared the resultant worst-case MPE levels to the FCC's occupational/controlled exposure limits outlined in OET Bulletin 65. The assumptions used in the modeling are based upon information provided by AT&T, and information gathered from other sources. Metro PCS also has antennas on the rooftop. Information about these antennas was included in the modeling analysis.

Per AT&T's corporate policy, the FCC's general population limits are applicable to all rooftop sites, regardless of the level of access control. Based on worst-case predictive modeling, the worst-case emitted power density may exceed the FCC's general public limit within approximately 12 feet of AT&T's Sector B UMTS antenna, within 10 feet of AT&T's Sector B GSM antenna, and within 9 feet of AT&T's LTE antenna on the main roof level. Modeling also indicates that the worst-case emitted power density may exceed the FCC's occupational limit within approximately 3 feet of AT&T's Sector B GSM antenna and within 2 feet of AT&T's UMTS and LTE antennas on the main rooftop level. At the nearest walking/working surfaces to the AT&T Sector B antennas, the maximum power density generated by the AT&T antennas is approximately 1,158.90 percent of the FCC's general public limit (231.78 percent of the FCC's occupational limit). At the nearest walking/working surfaces to the AT&T Sector A and C antennas, the maximum power density generated by the AT&T antennas is approximately 1,158.90 percent of the FCC's general public limit (231.78 percent of the FCC's occupational limit).

There are no modeled areas on the rooftop and ground that exceed the FCC's limits for general public or occupational exposure in front of the other carrier antennas.

The inputs used in the modeling are summarized in the RoofView® export file presented in Appendix C. A graphical representation of the RoofView® modeling results is presented in Appendix D. It should be noted that RoofView is not suitable for modeling microwave dish antennas; however, these units are designed for point-to-point operations at the elevations of the installed equipment rather than ground level coverage.

5.0 RECOMMENDED SIGNAGE/COMPLIANCE PLAN

Signs are the primary means for control of access to areas where RF exposure levels may potentially exceed the MPE. As presented in the AT&T guidance document, the signs must:

- Be posted at a conspicuous point;
- Be posted at the appropriate locations;
- Be readily visible; and
- Make the reader aware of the potential risks prior to entering the affected area.

The table below presents the signs that may be used for AT&T installations.

Informational Signs		Alerting Signs	
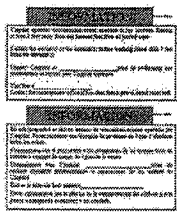	INFO 1		NOTICE
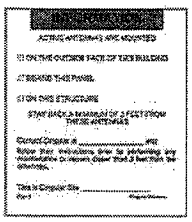	INFO 2		CAUTION
at&t	INFO 3		WARNING
	INFO 4		

Based upon protocols presented in AT&T's RF Exposure Policy guidance document, dated March 31, 2009, and additional guidance provided by AT&T, the following signage is recommended on the site:

Recommended Signage:

- Green INFO 1 sign posted on or next to the roof access point.
- INFO 2 signs posted horizontally on the parapet above the Sector A and C antennas.
- INFO 4 signs posted on the side of the Sector A and C antennas.
- Yellow CAUTION sign posted near the Sector B antennas.

Barriers should be installed 12 feet in front of the AT&T Sector B antennas. Barriers may consist of rope, chain, fencing, or painted/taped stripes. The signage and any barriers are graphically represented in the Signage Plan presented in Appendix E.

6.0 SUMMARY AND CONCLUSIONS

EBI has prepared this Radiofrequency Emissions Compliance Report for the proposed AT&T telecommunications equipment at the site located at 8820 International Blvd in Oakland, California.

EBI has conducted theoretical modeling to estimate the worst-case power density from AT&T antennas to document potential MPE levels at this location and ensure that site control measures are adequate to meet FCC and OSHA requirements, as well as AT&T's corporate RF safety policies. As presented in the preceding sections, based on worst-case predictive modeling, the worst-case emitted power density may exceed the FCC's general public limit within approximately 12 feet of AT&T's proposed Sector B antennas at the main roof level. Modeling also indicates that the worst-case emitted power density may exceed the FCC's occupational limit within approximately 3 feet of AT&T's proposed Sector B antennas at the main roof level.

Signage is recommended at the site as presented in Section 5.0 and Appendix E. Posting of the signage brings the site into compliance with FCC rules and regulations and AT&T's corporate RF safety policies.

7.0 LIMITATIONS

This report was prepared for the use of AT&T Mobility, LLC. It was performed in accordance with generally accepted practices of other consultants undertaking similar studies at the same time and in the same locale under like circumstances. The conclusions provided by EBI are based solely on the information provided by the client. The observations in this report are valid on the date of the investigation. Any additional information that becomes available concerning the site should be provided to EBI so that our conclusions may be revised and modified, if necessary. This report has been prepared in accordance with Standard Conditions for Engagement and authorized proposal, both of which are integral parts of this report. No other warranty, expressed or implied, is made.

Appendix A

Certifications

Reviewed and Approved by:

REGISTERED PROFESSIONAL ENGINEER
HERBERT J. STOCKINGER
23625
Exp. 12/31/11
CIVIL
STATE OF CALIFORNIA

Herbert J. Stockinger, PE
Senior Engineer

10-22-2010

Note that EBI's scope of work is limited to an evaluation of the Radio Frequency – Electromagnetic Energy (RF-EME) field generated by the antennas and broadcast equipment noted in this report. The engineering and design of the building and related structures, as well as the impact of the antennas and broadcast equipment on the structural integrity of the building, are specifically excluded from EBI's scope of work.

Preparer Certification

I, Ryan McManus, state that:

- I am an employee of EnviroBusiness Inc. (d/b/a EBI Consulting), which provides RF-EME safety and compliance services to the wireless communications industry.
- I have successfully completed RF-EME safety training, and I am aware of the potential hazards from RF-EME and would be classified "occupational" under the FCC regulations.
- I am familiar with the FCC rules and regulations as well as OSHA regulations both in general and as they apply to RF-EME exposure.
- I have been trained in on the procedures outlined in AT&T's RF Exposure Policy guidance (dated 3/31/09) and on RF-EME modeling using RoofView® modeling software.
- I have reviewed the data provided by the client and incorporated it into this Site Compliance Report such that the information contained in this report is true and accurate to the best of my knowledge.

Ryan B McManus

Appendix B

Antenna Inventory

Antenna Number	Operator	Antenna Type	TX Freq (MHz)	ERP (Watts)	Gain (dBd)	Model	Azimuth (deg.)	Length (ft)	Horizontal Beamwidth (Deg.)	X	Y	Z
ATT A1	AT&T	Panel	LTE 700	247	11.3	Andrew DBXNH-6565A-R2M	20	4.23	68	153	152	48.06
ATT A1	AT&T	Panel	LTE 1710	516	14.5	Andrew DBXNH-6565A-R2M	20	4.23	65	153	152	48.06
ATT A2	AT&T	Panel	GSM 850	500	11.85	Kathrein 742-264	20	4.32	68	151	156	48.01
ATT A2	AT&T	Panel	GSM 1900	500	14.65	Kathrein 742-264	20	4.32	65	151	156	48.01
ATT A3	AT&T	Panel	UMTS 850	250	12.5	Decibel TBXLHB-6565A-VTM	20	4.34	72	149	159	48
ATT A3	AT&T	Panel	UMTS 1900	250	14.7	Decibel TBXLHB-6565A-VTM	20	4.34	65	149	159	48
ATT A3	AT&T	Panel	UMTS 1900	250	14.7	Decibel TBXLHB-6565A-VTM	20	4.34	65	149	159	48
ATT B1	AT&T	Panel	LTE 700	247	11.3	Andrew DBXNH-6565A-R2M	260	4.23	68	128	147	3.385
ATT B1	AT&T	Panel	LTE 1710	516	14.5	Andrew DBXNH-6565A-R2M	260	4.23	65	128	147	3.385
ATT B2	AT&T	Panel	GSM 850	500	11.85	Kathrein 742-264	260	4.32	68	134	138	3.34
ATT B2	AT&T	Panel	GSM 1900	500	14.65	Kathrein 742-264	260	4.32	65	134	138	3.34
ATT B3	AT&T	Panel	UMTS 850	250	12.5	Decibel TBXLHB-6565A-VTM	260	4.34	72	136	134	3.33
ATT B3	AT&T	Panel	UMTS 1900	250	14.7	Decibel TBXLHB-6565A-VTM	260	4.34	65	136	134	3.33
ATT B3	AT&T	Panel	UMTS 1900	250	14.7	Decibel TBXLHB-6565A-VTM	260	4.34	65	136	134	3.33
ATT C1	AT&T	Panel	UMTS 850	250	12.5	Decibel TBXLHB-6565A-VTM	140	4.34	72	120	69	39.83
ATT C1	AT&T	Panel	UMTS 1900	250	14.7	Decibel TBXLHB-6565A-VTM	140	4.34	65	120	69	39.83
ATT C1	AT&T	Panel	UMTS 1900	250	14.7	Decibel TBXLHB-6565A-VTM	140	4.34	65	120	69	39.83
ATT C2	AT&T	Panel	GSM 850	500	11.85	Kathrein 742-264	140	4.32	68	123	71	39.84
ATT C2	AT&T	Panel	GSM 1900	500	14.65	Kathrein 742-264	140	4.32	65	123	71	39.84
ATT C3	AT&T	Panel	LTE 700	247	11.3	Andrew DBXNH-6565A-R2M	140	4.23	68	133	77	39.89
ATT C3	AT&T	Panel	LTE 1710	516	14.5	Andrew DBXNH-6565A-R2M	140	4.23	65	133	77	39.89
MET A1	MetroPCS	Panel	1900	243	16	Unknown	330	6	85	138	155	47
MET A2	MetroPCS	Panel	1900	243	16	Unknown	330	6	85	130	150	47

Antenna Number	Operator	Antenna Type	TX Freq (MHz)	ERP (Watts)	Gain (dBd)	Model	Azimuth (deg.)	Length (ft)	Horizontal Beamwidth (Deg.)	X	Y	Z
MET B1	MetroPCS	Panel	1900	243	16	Unknown	245	6	85	4	44	23
MET B2	MetroPCS	Panel	1900	243	16	Unknown	245	6	85	13	28	23
MET B3	MetroPCS	Panel	1900	243	16	Unknown	245	6	85	16	24	23

1. Note that EBI uses an assumed set of antenna specifications and powers for unknown and other carrier antennas for modeling purposes.

Appendix C

Roofview® Export File

Map, Settings, Antenna, and Symbol Data Table .. Exported from workbook -> RoofView 4.15.xls
Done on 10/21/2010 at 4:45:43 PM.
Use this format to prepare other data sets for the RoofView workbook file.
You may use as many rows in this TOP header as you wish.
The critical point are the cells in COLUMN ONE that read 'Start...' (eg. StartMapDefinition)
If used, these (4) headers are required to be spelled exactly, as one word (eg. StartMapDefinition)
The very next row will be considered the start of that data block.
The first row of the data block can be a header (as shown below), but this is optional.
When building a text file for import, Add the Map info first, then the Antenna data, followed by the symbol data
All rows above the first marker line 'Start...' will be ignored, no matter how many there are.
This area is for you use for documentation.
End of help comments.

You can place as much text here as you wish as long as you don't place it below
the Start Map Definition row below the blue line.
You may insert more rows using the Insert menu.
Should you need additional lines to document your project, simply insert additional rows
by highlighting the row number adjacent to the blue line below and then clicking on the Insert menu
and selecting rows.

StartMapDefinition

Roof Max X	Roof Max Y	Map Max X	Map Max Y	Y Offset	X Offset	Number of envelope	
180	180	190	190	20	20	1	$AE$21:HAE$21:$HB$200

List Of Areas
$AE$21:$HB$200

StartSettingsData

Standard	Method	Uptime	Scale Factc	Low Thr	Low Color	Mid Thr	Mid Color	Hi Thr	Hi Color	Over Color	Ap Ht Mult	Ap Ht Method
4	2	1	1	100	1	500	4	5000	2	3	1.5	1

StartAntennaData It is advisable to provide an ID (ant 1) for all antennas

ID	Name	(MHz) Freq	Trans Power	Trans Count	Coax Len	Coax Type	Other Loss	Input Power	Calc Power	Mfg	Model	(ft) X	(ft) Y	(ft) Z	Type	(ft) Aper	dBd Gain	BWdth Pt Dir	Uptime Profile	ON flag
ATT A1	LTE	700	30	1					30	Andrew	NH-6565A-	153	152	48.055		4.23	11.3	68;20		ON•
ATT A1	LTE	1710	30	1					30	Andrew	NH-6565A-	153	152	48.055		4.23	14.5	65;20		ON•
ATT A2	GSM	850	13.38918	4					53.55671	Kathrein	742-264	151	156	48.01		4.32	11.85	68;20		ON•
ATT A2	GSM	1900	7.02674	4					28.10696	Kathrein	742-264	151	156	48.01		4.32	14.65	65;20		ON•
ATT A3	UMTS	850	23.05599	1					23.05599	Decibel	.HB-6565A-	149	159	48		4.34	12.5	72;20		ON•
ATT A3	UMTS	1900	13.89261	1					13.89261	Decibel	.HB-6565A-	149	159	48		4.34	14.7	65;20		ON•
ATT A3	UMTS	1900	13.89261	1					13.89261	Decibel	.HB-6565A-	149	159	48		4.34	14.7	65;20		ON•
ATT B1	LTE	700	30	1					30	Andrew	NH-6565A-	128	147	3.385		4.23	11.3	68;260		ON•
ATT B1	LTE	1710	30	1					30	Andrew	NH-6565A-	128	147	3.385		4.23	14.5	65;260		ON•
ATT B2	GSM	850	13.38918	4					53.55671	Kathrein	742-264	134	138	3.34		4.32	11.85	68;260		ON•
ATT B2	GSM	1900	7.02674	4					28.10696	Kathrein	742-264	134	138	3.34		4.32	14.65	65;260		ON•
ATT B3	UMTS	850	23.05599	1					23.05599	Decibel	.HB-6565A-	136	134	3.33		4.34	12.5	72;260		ON•
ATT B3	UMTS	1900	13.89261	1					13.89261	Decibel	.HB-6565A-	136	134	3.33		4.34	14.7	65;260		ON•
ATT B3	UMTS	1900	13.89261	1					13.89261	Decibel	.HB-6565A-	136	134	3.33		4.34	14.7	65;260		ON•
ATT C1	UMTS	850	23.05599	1					23.05599	Decibel	.HB-6565A-	120	69	39.83		4.34	12.5	72;140		ON•
ATT C1	UMTS	1900	13.89261	1					13.89261	Decibel	.HB-6565A-	120	69	39.83		4.34	14.7	65;140		ON•
ATT C1	UMTS	1900	13.89261	1					13.89261	Decibel	.HB-6565A-	120	69	39.83		4.34	14.7	65;140		ON•
ATT C2	GSM	850	13.38918	4					53.55671	Kathrein	742-264	123	71	39.84		4.32	11.85	68;140		ON•
ATT C2	GSM	1900	7.02674	4					28.10696	Kathrein	742-264	123	71	39.84		4.32	14.65	65;140		ON•
ATT C3	LTE	700	30	1					30	Andrew	NH-6565A-	133	77	39.885		4.23	11.3	68;140		ON•
ATT C3	LTE	1710	30	1					30	Andrew	NH-6565A-	133	77	39.885		4.23	14.5	65;140		ON•
MET A1	MetroPCS	1900	20	1			3		10.02374	Unknown	Unknown	138	155	47		6	16	85;330		ON•
MET A2	MetroPCS	1900	20	1			3		10.02374	Unknown	Unknown	130	150	47		6	16	85;330		ON•
MET B1	MetroPCS	1900	20	1			3		10.02374	Unknown	Unknown	4	44	23		6	16	85;245		ON•
MET B2	MetroPCS	1900	20	1			3		10.02374	Unknown	Unknown	13	28	23		6	16	85;245		ON•

MET B3	MetroPCS	1900	20	1	3	10.02374	Unknown	Unknown	16	24	23	6	16	85;245	ON•

StartSymbolData

Sym	Map Mark	Roof X	Roof Y	Map Label	Description (notes for this table only)
Sym		5	35	AC Unit	Sample symbols
Sym		14	5	Roof Access	
Sym		45	5	AC Unit	
Sym		45	20	Ladder	

Appendix D

Roofview ® Graphics

% of FCC Public Exposure Limit

- Exposure Level ≥ 5,000
- 500 < Exposure Level ≤ 5000
- 100 < Exposure Level ≤ 500
- Exposure Level ≤ 100

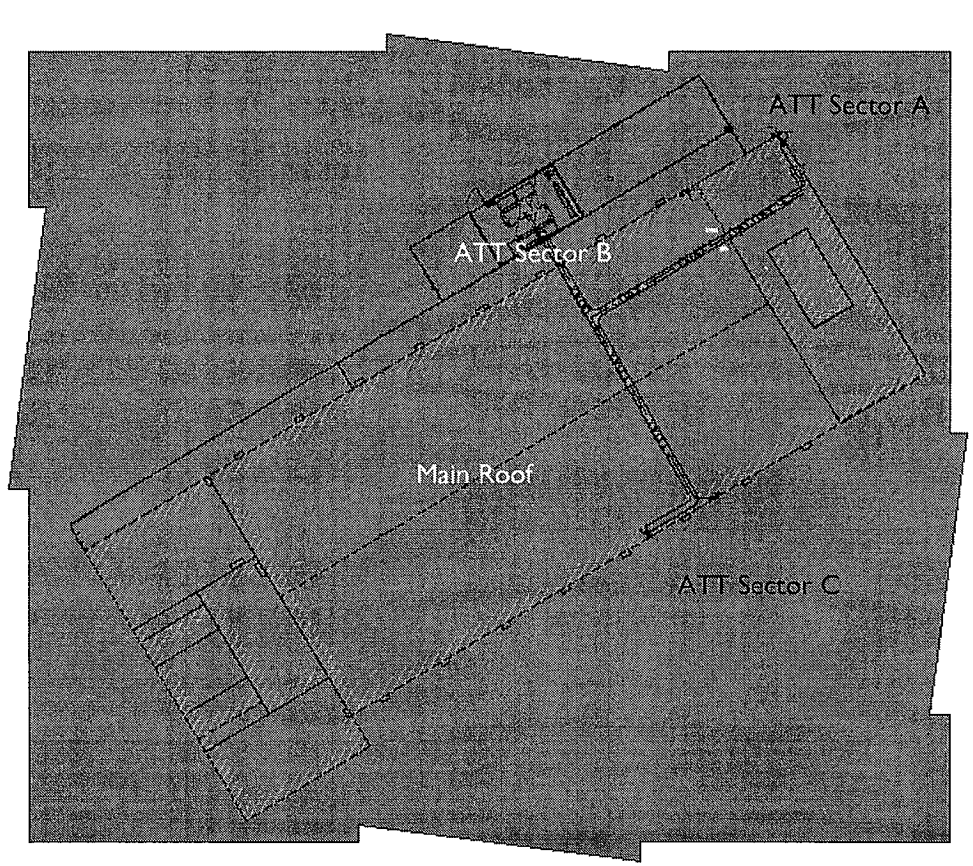

- AT&T Antennas
- Other Carrier Antennas

Roofview: Composite Exposure Levels

Facility Operator: AT&T Mobility
Site Name: AWE - International Blvd & 92Nd
AT&T Site Number: CNU2067
USID Number: 47116
Report Date: 10-22-10

EBI CONSULTING

% of FCC Public Exposure Limit

- Exposure Level >5
- Exposure Level ≤ 5

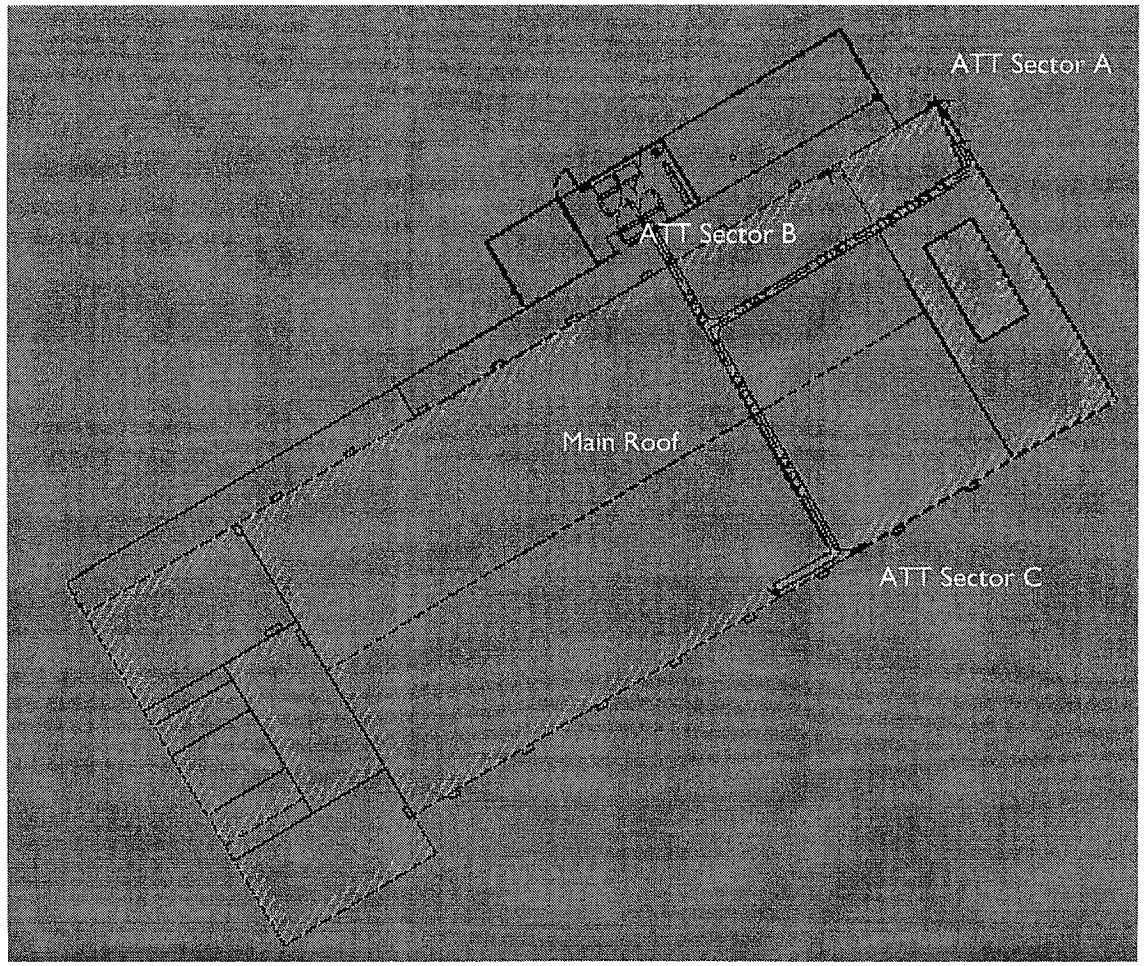

N

0' 20' 40' 60' 80'

- AT&T Antennas
- Other Carrier Antennas

Roofview: AT&T Exposure Levels

Facility Operator: AT&T Mobility
Site Name: AWE - International Blvd & 92Nd
AT&T Site Number: CNU2067
USID Number: 47116
Report Date: 10-22-10

EBI CONSULTING

Appendix E

Compliance/Signage Plan

AT&T Antennas

Other Carrier Antennas

Mounted at Roof Access

Recommended Barrier

Mounted on the side of the Sector A and C antennas

Mounted horizontally on the parapet above Sector A and C antennas

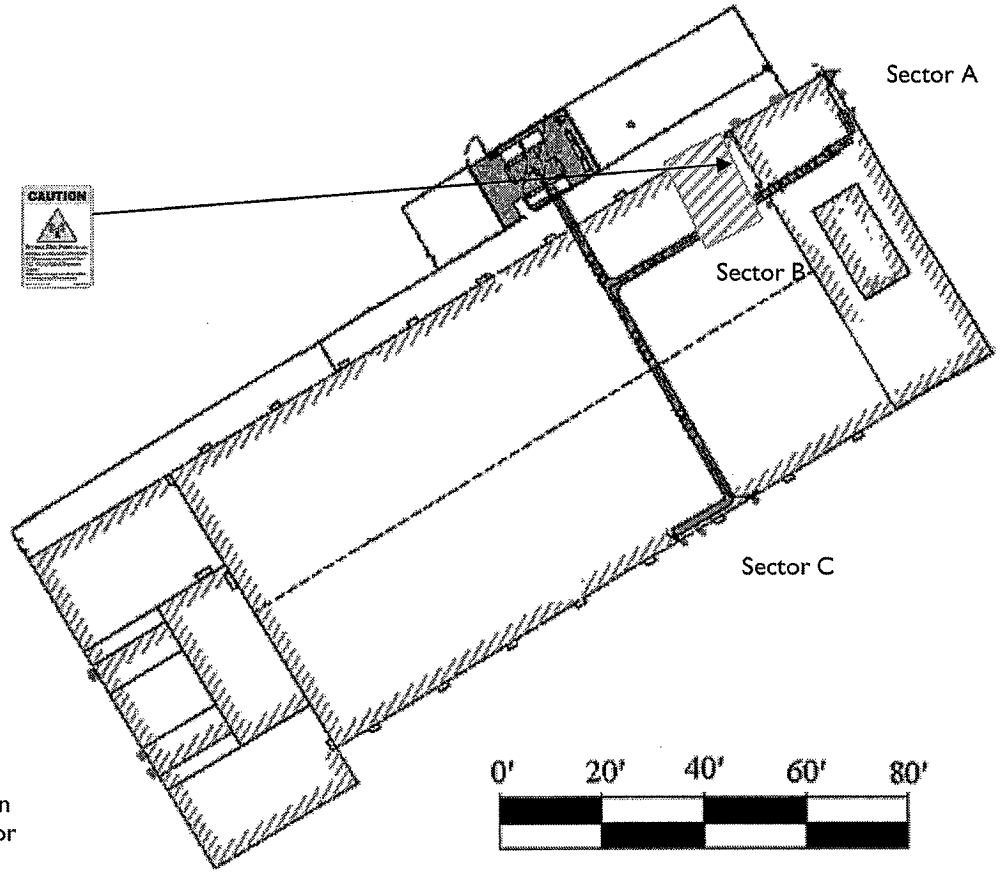

Sign Identification Legend	
	Denotes AT&T Informational Sign 1
	Denotes AT&T Informational Sign 2
	Denotes AT&T Informational Sign 3
	Denotes AT&T Informational Sign 4
	Denotes AT& T NOTICE Sign
	Denotes AT&T CAUTION Sign
	Denotes AT&T WARNING Sign

Compliance/Signage Plan

Facility Operator: AT&T Mobility

Site Name: AWE - International Blvd & 92Nd

AT&T Site Number: CNU2067

USID Number: 47116

Report Date: 10-22-10

EBI CONSULTING