Location: 4601 Shattuck Avenue (APN013-1160-005-00)
Proposal: To collocate 2 new Internet Service Exchange Points "dish" antennas on an existing steel frame support structure located on the roof of a 68 foot high commercial building.
Applicant/Contact Person: Cortel, LLC-Clearwire, Michelle Weller
Phone Number: (925) 997-1312
Owner: Storquest Self Storage
Case File Number: CMD10-281
Planning Permits Required: Major Conditional Use Permit to install a Macro telecommunication facility within 100 feet of the boundary of a residential zone; and Regular Design Review for new wireless antennas
General Plan: Neighborhood Center
Zoning: R-50 Medium Density Residential Zone; and C-28 Commercial Shopping District Zone
Environmental Determination: Exempt, Section 15301(e) of the State CEQA Guidelines: Existing Facilities (additions to existing structures); Section 15183 of the State CEQA Guidelines: Projects consistent with a Community Plan, General Plan or Zoning
Historic Status: Potential Designated Historic Property; Survey Rating: C3, Secondary Importance
Service Delivery District: 2
City Council District: 1
Date Filed: 11/04/10 *(revisions submitted 01/07/11)*
Action to be Taken: Decision based on staff report
Finality of Decision: *Appealable to City Council within 10 calendar days*
For Further Information: Contact Case Planner **Mike Rivera,** at **(510) 238-6417** or by email at mrivera@oaklandnet.com

PROJECT SUMMARY

The applicant requests a Major Conditional Use Permit to collocate 2 Internet Service Exchange Points (dish) antennas on an existing metal frame structure located on the roof of a self-storage facility. The proposal is considered a Macro Telecommunication Facility because it consists of more than 12 antennas. The commercial property is located at the northwest corner of Shattuck Avenue and 46th Street, near Telegraph Avenue.

Per Section 17.134.020(A)(3)(i) of the Oakland Planning Code, a Major Conditional Use Permit is required for a Telecommunications Facility located within one hundred (100) feet of the boundary of any residential zone. The proposal is within 100 feet of an R-50 residential zoned located to the west and southwest. The Planning Commission is the decision-making body for the proposed application. Staff recommends approval subject to the required findings **(Attachment A)** and conditions of approval **(Attachment B)**.

PROPERTY DESCRIPTION

The property contains an approximate 25,000 square foot, five-story commercial facility located on 4,800 square foot corner lot in the Temescal District. The commercial building is used as a self-storage facility and is divided by two different zoning districts. About 3/4 of its building footprint is located in the C-28 Commercial Shopping District Zone, and 1/4 of the remaining building footprint is located in the R-50

CITY OF OAKLAND PLANNING COMMISSION

Case File: CMD10-281
Applicant: Cortel, LLC-Clearwire, Michelle Weller
Address: 4601 Shattuck Avenue
Zone: R-50, C-28

Medium Density Residential Zone. The property is also near Highway-24 (to the west) and Telegraph Avenue (to the east), a major thoroughfare (See Map). The building was constructed around 1925 and is mainly used as a self-storage ("StorQuest") facility.

The commercial facility is also used as a site for four different telecommunication facilities: Nextel, Sprint, T-Mobile and ClearWire. Over the last fifteen years, a total of 29 wireless communication antennas were approved by the Planning Commission. The most recent approval included the collocation of 5 antennas (ClearWire) in May of 2010. Two of the recently approved internet "dish" antennas are located to the south and northwest of existing steel frame support structure located on the roof of the building. Also, the other three approved antenna panels are located to the northwest, east and southwest along the exterior building parapet of the 5-story commercial building.

PROJECT DESCRIPTION

The applicant proposes to install 2 Internet Service Exchange Points "dish" antennas on an existing steel frame support structure located on the southeast corner of the building roof. Currently, there are 2 new existing ClearWire "dish" antennas located to the west and to the south of the frame structure. These 2 "dish" antennas were recently approved by the Planning Commission in 2010. The proposed 2 "dish" Internet antennas will be mounted to the northwest (Sector A) and to the northeast (Sector B) of the steel frame support structure. Each of the "dish" antennas measure about 2 feet in diameter and will be distanced about 10 feet from each other. The applicant proposes to paint the "dish" antennas to match the color of the support metal frame structure and building. The proposal includes photo simulations of the 2 "dish" antennas viewed from the west (along Telegraph Avenue), and from the north (along Shattuck Avenue and 48th Street). **(See Attachment E)**

On Sheet A-2 of the roof plans, the project shows the location of all of the existing and proposed antennas. Most of the existing antenna panels are flush-mounted around the exterior walls of the building parapet. Some of these antenna panels are also covered by a fiberglass panel screens (southwest corner), and the other antenna panels are painted to match the color of the building. The 2 proposed "dish" antennas will be mounted on the existing Nextel steel frame support structure, and will measure about 72 feet high above grade.

GENERAL PLAN ANALYSIS

The property is located in the Neighborhood Center Mixed Use Land Use Classification as described in the Oakland General Plan. The intent of the Neighborhood Center Mixed Use is to identify, create, maintain and enhance mixed use neighborhood commercial centers. The goals set forth in the General Plan include personal and business services and entertainment uses. The proposal to collocate 2 new wireless communication antennas will provide and improve internet services to meet daily and long-term needs for the public. Improvements to telecommunication networks are important to provide services and retail trade to Oakland residents. General Plan Objective I/C3 states that Oakland needs to serve a wide variety of commercial uses and provide personal and professional services. The proposed wireless communication facility will serve the needs of surrounding businesses and residents alike, because of the demand for quality wireless communication service and internet use.

ZONING ANALYSIS

The property is located in the C-28 Commercial Shopping District Zone and in the R-50 Medium Density Residential Zone. The intent of the C-28 Zone is to create, preserve, and enhance major boulevards of medium- scale retail establishments featuring some specified higher density nodes in attractive settings oriented to pedestrian comparison shopping, and to encourage mixed-use residential and nonresidential developments, and is typically appropriate along major thoroughfares near residential communities. As for the R-50 Zone, the intent is to create, preserve, and enhance areas for apartment living at medium

densities in desirable settings, and is typically appropriate to areas of existing medium density residential development. Staff believes that the proposal to collocate 2 new Internet "dish" antennas creates a nonresidential development that promotes basic services to commercial and mixed-use residential establishments that are typically located along major thoroughfares such as the nearby Telegraph Avenue and Shattuck Avenue.

Per Section 17.134.020(A)(3)(i) of the Oakland Planning Code, the proposal for a Telecommunication Facility (Macro) if located within one hundred (100) feet of the boundary of any residential zone requires a Major Conditional Use Permit. The proposed development is within 100 feet from the R-50 Zone. In addition, per Sections 17.24.080(B) and 17.44.060(B) of the Oakland Planning Code, a Minor Conditional Use Permit is required for a Telecommunication Facility (Macro) proposal in the C-28 Zone and R-50 Zone. The purpose of the Major Conditional Use Permit is to analyze the operating characteristics or potential adverse effects on the surrounding areas.

Per Section 17.128.070 (B) of the Planning Code, the proposal for a Telecommunication Facility (Macro) also requires Design Review. The purpose of Design Review is to analyze projects that require special design treatment and consideration of relationship to the physical surroundings. Staff has analyzed the required Conditional Use Permit and Design Review findings and can justify approval of the proposed Telecommunication Facility.

ENVIRONMENTAL DETERMINATION

The California Environmental Quality Act (CEQA) Guidelines lists the projects that qualify as Categorical Exemptions from environmental review. The development proposal is categorically exempt from the environmental review requirements pursuant to Section 15301(e) for additions to existing structures and Section 15183 for projects consistent with a Community Plan, General Plan or Zoning.

KEY ISSUES AND IMPACTS

Conditional Use Permit and Regular Design Review Findings

Per Section 17.128.070(C) and 17.128.070(B) of the Planning Code, the proposal requires additional Conditional Use Permit and Design Review findings for Macro facilities. The purpose of the Conditional Use Permit and Design Review findings is to analyze the operating characteristics or potential adverse effects on the surrounding uses, and community character. Staff will evaluate these findings in this report.
(See Attachment A)

Site Location Preferences

Planning Code Section 17.128.110 of the Telecommunication Regulations, states that new wireless facilities shall generally be located on the following properties or facilities in order of preference:

A. Collocated on an existing structure or facility with existing wireless antennas;
B. City owned properties or other public or quasi-public facilities;
C. Existing commercial or industrial structures in non-residential zones;
D. Existing commercial or industrial structures in residential zones;
E. Other non-residential uses in residential zones;
F. Residential uses in non-residential zones;
G. Residential uses in residential zones.

This regulation states that proposed facilities locating on an A, B or C ranked preference, do not require a site alternative analysis. In this case, the development proposal to collocate 2 internet "dish" antennas with other telecommunication facilities correspond with the first site location preference (A) for placing

the antennas with other existing wireless antennas located on the roof and around the exterior parapet walls of the 5-story commercial building. Staff believes that the collocation of the proposed 2 internet "dish" antennas on the roof of the commercial building is preferable because the antennas are set back away from the edge of the exterior building parapet and will not be significantly visible from public view because the "dish" antennas are small in size and will be painted to match the color of the building. Therefore, a site alternative analysis will not be required.

Site Design Preferences

Per Planning Code, Section 17.128.120 of the Telecommunication Regulations states that new wireless facilities shall generally be designed in the following order of preference:

A. Building or structure mounted antennas concealed from view;
B. Building or structure mounted antennas set back from roof edge, not visible from public right-of-way;
C. Building or structure mounted antennas below roof line (façade mount, pole mount) visible from public right-of-way, painted to match existing structure;
D. Building or structure mounted antennas above roof line visible from public right-of-way;
E. Monopoles;
F. Towers.

This regulation states that proposed telecommunication facilities which are designed to meet A or B ranked preference do not require a site design alternative analysis; however, facilities designed to meet C through F must submit a site design alternative analysis. A site design alternative analysis consists of written evidence showing the reason each higher preference design alternative can not be used. This evidence must be in sufficient detail for independent verification that can be obtained if required by the Zoning Manager. The evidence should indicate if the reason an alternative was rejected is due to technical issues (e.g. inappropriate height or interference with other RF sources), or for other constrains (e.g. inability to provide utilities or construction impediments).

Staff finds the proposed development to collocate 2 internet "dish" antennas on the roof of the 5-story commercial building fits with Site Design Preference (B). The proposed 2 internet "dish" antennas measure about 2 feet in diameter, the antennas are set back 11 feet (east) and 25 feet (north) from the edge of the building parapet, and are painted to match the color of the building, thus concealing its visibility from public view.

Radio Frequency Emissions Standards

Planning Code Section 17.128.130 of the Telecommunications Regulations, requires the applicant to submit the following verifications:

A. With the initial application submittal, a Radio Frequency (RF) emissions report shall be prepared by a licensed professional engineer or other expert, indicating that the proposed site will operate within the current acceptable thresholds as established by the Federal government or any such agency who may be subsequently authorized to established such standards.
B. Prior to commencement of construction, a RF emissions report indicating the baseline RF emissions condition at the proposed site.
C. Prior to final building permit sign off, an RF emissions report indicating that the site is actually operating within the acceptable thresholds as established by the Federal government or any such agency who may be subsequently authorized to establish such standards.

The proposal includes a Radio Frequency (RF) Emissions report prepared by TRK Engineering, dated January 4, 2011. **(See Attachment D)** The project engineer, Sei Yuen Sylvan Wong, analyzed the

project and determined that the proposal to install/collocate 2 internet "dish" antennas on the existing support steel frame will comply with the set standards for limiting public exposure to radio frequency energy and will not cause significant impacts on the environment. In order to confirm that the applicant meets the standards of Section 17.128.130 of the Planning Code, staff recommends a condition of approval that requires the applicant to submit a final Radio Frequency emissions report prior to the issuance of a final building permit stating that the facility is operating within the acceptable thresholds as established by the regulatory Federal Communication Commission. **(See Conditions of Approval # 14)**

CONCLUSION

The development proposal to collocate 2 internet "dish" antennas on the roof of the 5-story commercial building is a compatible use for the area which creates access to telecommunication services and internet use to the general public, without creating impacts to the environment. Staff finds that the collocation of the new 2 antennas will not create a cumulative impact to the site because the antennas are small in size, set back from the edge of the building roof and are painted to blend in with the color of the building. As a result, the proposal will not be visible from public view. The proposal also complies with the regulations set by the Federal Communication Commission. Therefore, staff determines that the application meets the required findings **(See Attachment A)**, and recommends approval of the application by the Planning Commission, subject to the Conditions of Approval. **(See Attachment B)**

RECOMMENDATIONS

1. Affirm staff's environmental determination.
2. Approve Major Conditional Use Permit application CMD10-281, subject to the attached findings and conditions of approval.

Prepared by:

Mike Rivera
Planner II

Approved by:

Scott Miller
Zoning Manager

Approved for forwarding to the
City Planning Commission:

Scott Miller, for
Eric Angstadt, Deputy Director
Community & Economic Development Agency

ATTACHMENTS

A. Findings
B. Conditions of Approval
C. Project Plans, submitted on November 4, 2010
D. Radio Frequency Emissions Report, dated January 4, 2011
E. Photo Simulations

ATTACHMENT A

Findings for Approval

The findings required granting your application for Major Conditional Use Permit and Design Review found in Sections 17.134.050, 17.128.070(C), 17.128.070(B) and 17.136.050(B) of the Oakland Zoning Regulations, and the reasons your proposal satisfy these findings, are as follows:

SECTION 17.134.050 –CONDITIONAL USE PERMIT FINDINGS

A. That the location, size, design, and operating characteristics of the proposed development will be compatible with, and will not adversely affect, the livability or appropriate development of abutting properties and the surrounding neighborhood, with consideration to be given to harmony in scale, bulk, coverage, and density; to the availability of civic facilities and utilities; to harmful effect, if any upon desirable neighborhood character; to the generation of traffic and the capacity of surrounding streets; and to any other relevant impact of the development.

The proposed 2 internet "dish" antennas will be compatible with the site and surrounding neighborhood because the size and design are small and similar to the existing "dish" antennas. The proposed antennas are also set back from the building parapet and painted to match to the building, thus minimizing its visibility from public view. The proposal includes a Radio Frequency (RF) Emissions report and states that the antennas comply with the regulations set by the Federal Communication Commission. To comply with Radio Frequency Standards, staff recommends the applicant submits an RF Emissions report prior to the issuance of a final building inspection stating that the facility is operating within the acceptable thresholds. (See Condition of Approval # 14)

B. That the location, design, and site planning of the proposed development will provide a convenient and functional living, working, shopping, or civic environment, and will be as attractive as the nature of the use and its location and setting warrant.

The proposed 2 internet "dish" antennas will provide a convenient and functional working environment because the telecommunication facility will provide high speed internet services to the general public. The proposed antennas will be located on an existing steel frame support structure on the roof of a 5-story commercial building. The design of the proposed antennas will be compatible with the 2 existing internet "dish" antennas because they are located on the same support frame structure and have a similar design.

C. That the proposed development will enhance the successful operation of the surrounding area in its basic community functions, or will provide an essential service to the community or region.

The proposed 2 internet "dish" antennas will provide and enhance wireless communication services to surrounding commercial and residential users. The antennas will also provide services to motorist traveling along the nearby Highway-24 and to emergency officials.

D. That the proposal conforms with all applicable Regular Design Review criteria set forth in Section 17.136.050 of the Oakland Planning Code.

The proposed development to collocate 2 internet "dish" antennas on the roof of a commercial building conforms to the applicable design review findings in section

17.128.070(B) for Macro Facilities, and section 17.136.050(B) for Non-Residential Facilities. See design review findings listed below.

E. That the proposal conforms in all significant respects with the Oakland General Plan and with any other applicable plan or development control map which has been adopted by the City Council.

The proposed development is located in the Neighborhood Center Mixed Use Land Use Classification of the Oakland General Plan. The intent of the Neighborhood Center Mixed Use Land Use Classification is to identify, create, maintain, and enhance mixed use neighborhood commercial centers that are characterized by smaller scale pedestrian-oriented, continuous street frontage with a mix of retail, housing, office, active open space, eating and drinking places, personal and business services and smaller scale educational, cultural or entertainment uses. The collocation of the 2 internet "dish" antennas will provide services to a wide range of commercial and residential users as the quality and use of high speed internet is in high demand. The proposal is compatible with the building because there are other similar antennas on the roof of the 5-story commercial building.

SECTION 17.128.070 (C)–CONDITIONAL USE PERMIT CRITERIA FOR MACRO FACILITIES

1. The project must meet the special design review criteria listed in subsection B of this section.

   The proposed development conforms to the design review criteria for Macro Facilities as described in section 17.128.070 (B). See design review findings listed below.

2. The proposed project must not disrupt the overall community character.

   The proposed 2 internet "dish" antennas will not disrupt the characteristics of the commercial and residential zones. The antennas will be set back from the edge of the building roof and will be painted to blend in with the color of the steel support frame and building.

SECTION 17.128.070 (B)–DESIGN REVIEW CRITERIA FOR MACRO FACILITIES

1. Antennas should be painted and/or textured to match the existing structure.

   The proposed collocation of the 2 internet "dish" antennas on the roof of the 5-story commercial building will not contrast with the site because the antennas will be painted to match the color of the steel frame support structure and the building.

2. Antennas mounted on architecturally significant structures or significant architectural detail of the building should be covered by appropriate casings which are manufactured to match existing architectural features found in the building.

   The proposed installation of the 2 internet "dish" antennas will not be mounted on the exterior walls of the utilitarian design self-storage building. Instead, the antennas will be located on the roof of the 5-story building and mounted on the existing steel frame support structure. Therefore, the proposal does not require the installation of casings to cover the antennas.

3. Where feasible, antennas can be placed directly above, below or incorporated with vertical design elements of a building to help in camouflaging.

The proposed 2 internet "dish" antennas will be mounted on an existing steel frame support structure located on the roof of the 5-story commercial building. The antennas will not project over the roofline of the building because they are adequately set back from the edge of the building roof. The antennas will be painted to match to the color of steel frame structure and building so that they are less conspicuous from public view.

4. Equipment shelters or cabinets shall be screened from the public view by using landscaping, or materials and colors consistent with surrounding backdrop or placed underground, inside existing facilities or behind screening fences.

   The proposed development does not include the installation of new equipment shelters or cabinets that will require screening from public view. However, the proposal calls for the installation of new antenna cables that will be routed inside the existing cable tray located on the roof of the building. The cable tray will not be visible because it is anchored to the surface of the roof and screened by the existing building parapet.

5. Equipment shelters or cabinets shall be consistent with the general character of the area.

   The proposed development does not include the installation of equipment shelters or cabinets; therefore, this finding does not apply.

6. For antennas attached to the roof, maintain a 1:1 ratio (example: ten feet high antenna requires ten feet setback from façade) for equipment setback; screen the antennas to match existing air conditioning units, stairs, or elevator towers; avoid placing roof mounted antennas in direct line with significant view corridors.

   The proposed 2 internet "dish" antennas meet the 1:1 ratio requirement because they are adequately set back from the edge of the 5-story building. The antennas will be mounted about 9 feet high on the existing 10 feet high steel frame support structure. The closest internet "dish" antenna located to the east will be set back about 11 feet from the edge of the building.

7. That all reasonable means of reducing public access to the antennas and equipment has been made, including, but not limited to, placement in or on buildings or structures, fencing, anti-climbing measures and anti-tampering devices.

   The proposed location of the 2 internet "dish" antennas is located on the roof of the 5-story commercial building. Access to the roof is limited to authorized personnel and requires a key to open the roof door. Therefore, public access to the roof is restricted.

SECTION 17.136.050 (B)–DESIGN CRITERIA FOR NON RESIDENTIAL FACILITIES

1. That the proposal will help achieve or maintain a group of facilities which are well related to one another and which, when taken together, will result in a well-composed design, with consideration given to site, landscape, bulk, height, arrangement, texture, materials, colors, and appurtenances; the relation of these factors to other facilities in the vicinity; and the relation of the proposal to the total setting as seen from key points in the surrounding area. Only elements of design which have some significant relationship to outside appearance shall be considered, except as otherwise provided in Section 17.136.060.

The proposed development will keep in with the design of the existing telecommunication facilities located on the 5-story commercial building. The collocation of the 2 internet "dish" antennas on the existing steel frame support structure located on the roof of the building will be compatible because the antennas will be sited and designed to blend in with the group of existing antennas. The proposed antennas are adequately set back from the edge of the building and painted to match the color of the steel frame support structure and building. When viewed from the surrounding areas, the 2 proposed internet "dish" antennas will relate to the residential and commercial surroundings.

2. That the proposed design will be of a quality and character which harmonizes with, and serves to protect the value of, private and public investments in the area.

   The design of the proposed development will be in character because the size of the 2 internet "dish" antennas are small, are set back from the edge of the building roof, and are painted to blend in with the background of the steel frame support structure. Overall, the proposed design will help to protect the neighborhood context because the antennas will not significantly create a visual impact.

3. That the proposed design conforms in all significant respects with the Oakland General Plan and with any applicable design review guidelines or criteria, district plan.

   The proposal conforms to the Oakland General Plan Objectives and Policies including the Conditional Use Permit Findings 17.134.050 & 17.128.070(c), and Design Review Findings 17.128.070(b) & 17.136.050(b) found within this staff report.

ATTACHMENT B

Conditions of approval

1. **Approved Use**

   Ongoing

   a) The project shall be constructed and operated in accordance with the authorized use as described in the application materials, and the design review plans dated **October 25, 2010** and submitted to the City on **November 4, 2010**, and as amended by the following conditions. Any additional uses or facilities other than those approved with this permit, as described in the project description and the approved plans, will require a separate application and approval. Any deviation from the approved drawings, Conditions of Approval or use shall required prior written approval from the Director of City Planning or designee.

   b) This action by the **Planning Commission** ("this Approval") includes the approvals set forth below. This Approval includes the collocation 2 internet "dish" antennas mounted on the existing steel frame support structure located on the roof of a 5-story commercial building at 4601 Shattuck Avenue.

2. **Effective Date, Expiration, Extensions and Extinguishment**

   Ongoing

   Unless a different termination date is prescribed, this Approval shall expire **two (2) years** from the approval date, unless within such period all necessary permits for construction or alteration have been issued, or the authorized activities have commenced in the case of a permit not involving construction or alteration. Upon written request and payment of appropriate fees submitted no later than the expiration date of this permit, the Director of City Planning or designee may grant a one-year extension of this date, with additional extensions subject to approval by the approving body. Expiration of any necessary building permit for this project may invalidate this Approval if the said extension period has also expired.

3. **Scope of This Approval; Major and Minor Changes**

   Ongoing

   The project is approved pursuant to the **Planning Code** only. Minor changes to approved plans may be approved administratively by the Director of City Planning or designee. Major changes to the approved plans shall be reviewed by the Director of City Planning or designee to determine whether such changes require submittal and approval of a revision to the approved project by the approving body or a new, completely independent permit.

4. **Conformance with other Requirements**

   Prior to issuance of a demolition, grading, P-job, or other construction related permit

   1. The project applicant shall comply with all other applicable federal, state, regional and/or local laws/codes, requirements, regulations, and guidelines, including but not limited to those imposed by the City's Building Services Division, the City's Fire Marshal, and the City's Public Works Agency. Compliance with other applicable requirements may require changes to the approved use and/or plans. These changes shall be processed in accordance with the procedures contained in Condition of Approval #3.
   2. The applicant shall submit approved building plans for project-specific needs related to fire protection to the Fire Services Division for review and approval, including, but not limited to automatic extinguishing systems, water supply improvements and hydrants, fire department access, elevated walking pathways, safety railings, emergency lighting and vegetation management for preventing fires.

5. **Conformance to Approved Plans; Modification of Conditions or Revocation**

Ongoing

a) Site shall be kept in a blight/nuisance-free condition. Any existing blight or nuisance shall be abated within 60-90 days of approval, unless an earlier date is specified elsewhere.

b) The City of Oakland reserves the right at any time during construction to require certification by a licensed professional that the as-built project conforms to all applicable zoning requirements, including but not limited to approved maximum heights and minimum setbacks. Failure to construct the project in accordance with approved plans may result in remedial reconstruction, permit revocation, permit modification, stop work, permit suspension or other corrective action.

c) Violation of any term, **conditions of approval** or **project description** relating to the Approvals is unlawful, prohibited, and a violation of the Oakland Municipal Code. The City of Oakland reserves the right to initiate civil and/or criminal enforcement and/or abatement proceedings, or after notice and public hearing, to revoke the Approvals or alter these **conditions of approval** if it is found that there is violation of any of the **conditions of approval** or the provisions of the Planning Code or Municipal Code, or the project operates as or causes a public nuisance. This provision is not intended to, nor does it, limit in any manner whatsoever the ability of the City to take appropriate enforcement actions. The project applicant shall be responsible for paying fees in accordance with the City's Master Fee Schedule for inspections conducted by the City or a City-designated third-party to investigate alleged violations of the Conditions of Approval.

6. **Signed Copy of the Conditions of Approval**

With submittal of a demolition, grading, and building permit

A copy of the approval letter and **Conditions of Approval** shall be signed by the property owner, notarized, and submitted with each set of permit plans to the appropriate City agency for this project.

7. **Indemnification**

Ongoing

a. To the maximum extent permitted by law, the applicant shall defend (with counsel acceptable to the City), indemnify, and hold harmless the City of Oakland, the Oakland City Council, the City of Oakland Redevelopment Agency, the Oakland City Planning Commission and its respective agents, officers, and employees (hereafter collectively called City) from any liability, damages, claim, judgment, loss (direct or indirect)action, causes of action, or proceeding (including legal costs, attorneys' fees, expert witness or consultant fees, City Attorney or staff time, expenses or costs) (collectively called "Action") against the City to attack, set aside, void or annul, (1) an approval by the City relating to a development-related application or subdivision or (2) implementation of an approved development-related project. The City may elect, in its sole discretion, to participate in the defense of said Action and the applicant shall reimburse the City for its reasonable legal costs and attorneys' fees.

b. Within ten (10) calendar days of the filing of any Action as specified in subsection A above, the applicant shall execute a Letter Agreement with the City, acceptable to the Office of the City Attorney, which memorializes the above obligations. These obligations and the Letter of Agreement shall survive termination, extinguishment or invalidation of the approval. Failure to timely execute the Letter Agreement does not relieve the applicant of any of the obligations contained in this condition or other requirements or conditions of approval that may be imposed by the City.

8. **Compliance with Conditions of Approval**

Ongoing

The project applicant shall be responsible for compliance with the recommendations in any submitted and approved technical report and all the Conditions of Approval set forth below at its sole cost and expense, and subject to review and approval of the City of Oakland.

9. **Severability**

Ongoing

Approval of the project would not have been granted but for the applicability and validity of each and every one of the specified **conditions of approval**, and if one or more of such **conditions of approval** is found to be invalid by a court of competent jurisdiction this Approval would not have been granted without requiring other valid **conditions of approval** consistent with achieving the same purpose and intent of such Approval.

10. **Job Site Plans**

Ongoing throughout demolition, grading, and/or construction

At least one (1) copy of the stamped approved plans, along with the Approval Letter and Conditions of Approval, shall be available for review by City officials and project developer at the job site at all times.

11. **Special Inspector/Inspections, Independent Technical Review, Project Coordination and Management**

Prior to issuance of a demolition, grading, and/or construction permit

The project applicant may be required to pay for on-call third-party special inspector(s)/inspections as needed during the times of extensive or specialized plancheck review or construction. The project applicant may also be required to cover the full costs of independent technical review and other types of peer review, monitoring and inspection, including without limitation, third party plan check fees, including inspections of violations of Conditions of Approval. The project applicant shall establish a deposit with the Building Services Division, as directed by the Building Official, Director of City Planning or designee.

12. **Operational Noise-General**

Ongoing.

Noise levels from the activity, property, or any mechanical equipment on site shall comply with the performance standards of Section 17.120 of the Oakland Planning Code and Section 8.18 of the Oakland Municipal Code. If noise levels exceed these standards, the activity causing the noise shall be abated until appropriate noise reduction measures have been installed and compliance verified by the Planning and Zoning Division and Building Services.

13. **Lighting Plan**

Prior to the issuance of an electrical or building permit

The proposed lighting fixtures shall be adequately shielded to a point below the light bulb and reflector and that prevent unnecessary glare onto adjacent properties. Plans shall be submitted to the Planning and Zoning Division and the Electrical Services Division of the Public Works Agency for review and approval. All lighting shall be architecturally integrated into the site.

SPECIFIC PROJECT CONDITIONS

14. **Emissions Report**
Prior to final inspection
The applicant shall provide an RF emissions report to the City of Oakland Zoning Division indicating that the site is actually operating within the acceptable thresholds as established by the regulatory Federal government or any such agency that may be subsequently authorized to establish such standards.

15. **Sinking Fund for Facility Removal or Abandonment.**
Prior to issuance of a building permit.
The applicant shall provide proof of the establishment of a sinking fund to cover the cost of removing the facility if it is abandoned within a prescribed period. The word "abandoned" shall mean a facility that has not been operational for a six (6) month period, except where nonoperation is the result of maintenance of renovation activity pursuant to valid City permits. The sinking fund shall be established to cover a two-year period, at a financial institution approved by the City's Office of Budget and Finance. The sinking fund payment shall be determined by the Office of Budget and Finance and shall be adequate to defray expenses associated with the removal of the telecommunication facility.

16. **Encroachment Permits**
Prior to issuance of a demolition, grading or building permit
The applicant shall obtain any encroachment permits, waiver of damages or other approvals required by the Building Services Division, for any privately constructed public improvements, or any permanent or temporary elements located in the public right of way. This shall include telecommunication equipment, overhead wires, underground trenching, etc.

APPROVED BY:

City Planning Commission:_____(date)_____(vote)

clearwire

STORQUEST - MOD
CA-SFO0126A
4601 SHATTUCK AVE, OAKLAND, CA

VICINITY MAP - N.T.S.

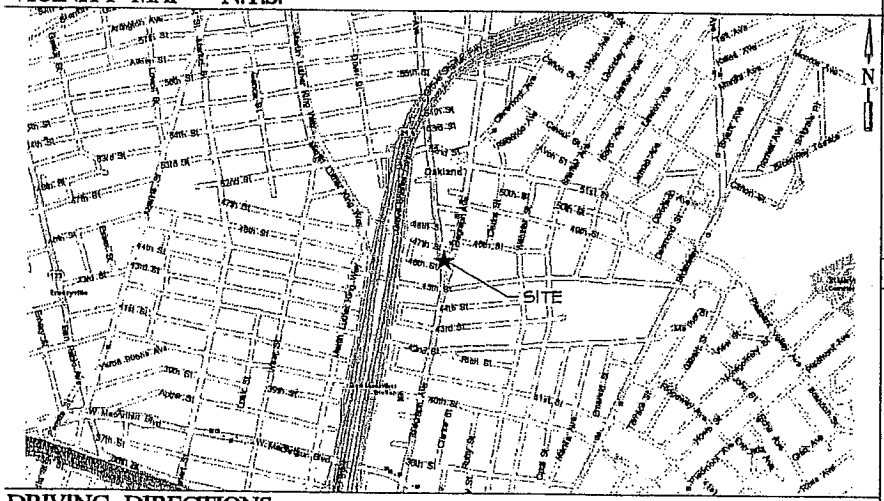

DRIVING DIRECTIONS

FROM: CLEARWIRE REGIONAL OFFICE
1990 N CALIFORNIA BLVD SUITE #20
WALNUT CREEK CA, 94596

TO: STORQUEST - MOD
4601 SHATTUCK AVE
OAKLAND, CA

DISTANCE: 14.4 MILES

HEAD NORTH ON N CALIFORNIA BLVD TOWARD PRINGLE AVE
TURN RIGHT AT N MAIN ST
TAKE THE 2ND RIGHT ONTO IGNACIO VALLEY RD
CONTINUE ONTO HILLSIDE AVE
MERGE ONTO CA-24 W VIA THE RAMP TO OAKLAND FOR 12.5 MI
TAKE THE TELEGRAPH AVE EXIT
TURN LEFT AT TELEGRAPH AVE
TAKE THE 1ST RIGHT ONTO 56TH ST
TURN LEFT AT SHATTUCK AVE
ARRIVE AT 4601 SHATTUCK AVE OAKLAND, CA ON THE RIGHT

CODE COMPLIANCE

ALL WORK AND MATERIALS SHALL BE PERFORMED AND INSTALLED IN ACCORDANCE WITH THE CURRENT EDITIONS OF THE FOLLOWING CODES AS ADOPTED BY THE LOCAL GOVERNING AUTHORITIES. NOTHING IN THESE PLANS IS TO BE CONSTRUED TO PERMIT WORK NOT CONFORMING TO THESE CODES.

- CALIFORNIA ADMINISTRATIVE CODE (INCL TITLE 24 & 25)
- 2007 CALIFORNIA BUILDING CODE
- CITY/COUNTY ORDINANCES
- BUILDING OFFICIALS AND CODE ADMINISTRATORS (BOCA)
- 2007 CALIFORNIA MECHANICAL CODE
- ANSI/EIA-222-F LIFE SAFETY CODE NFPA-101
- 2007 CALIFORNIA PLUMBING CODE
- 2007 CALIFORNIA ELECTRICAL CODE
- LOCAL BUILDING CODE

BUILDING/SITE DATA LEGEND

LATITUDE:	37° 50' 02.00" N (NAD 83)
LONGITUDE:	122° 15' 50.1" W (NAD 83)
A.P.N.:	013-1160-005
ZONING:	RESIDENTIAL
OCCUPANCY:	U, UNMANNED
CONSTRUCTION TYPE:	V-B
ADA REQ.:	FACILITY IS UNMANNED AND NOT FOR HUMAN HABITATION. ADA ACCESS NOT REQUIRED.
TITLE 24 REQ.:	FACILITY IS UNMANNED AND NOT FOR HUMAN HABITATION. TITLE 24 IS EXEMPT.

PROJECT DESCRIPTION

THE INSTALLATION OF (2) INTERNET SERVICES EXCHANGE POINTS AT AN EXISTING WIRELESS COMMUNICATIONS FACILITY

SIGNATURE BLOCK

ZONING MANAGER	DATE
SITE ACQ. MANAGER	DATE
RF MANAGER	DATE
MICROWAVE MANAGER	DATE
CONSTRUCTION MANAGER	DATE
CLEARWIRE CONSTRUCTION MANAGER	DATE

PROJECT SUMMARY

PROPERTY OWNER:
STORQUEST SELF STORAGE

APPLICANT:
CLEARWIRE CORP.
4400 CARILLON PT.
KIRKLAND, WA

LEASING MANAGER:
CORTEL, LLC
CONTACT: JOHN MERRITT
PHONE: (805) 886-0733

ZONING MANAGER:
CORTEL, LLC
CONTACT: MICHELLE WEL
PHONE: (925) 997-1812

CONSULTANT:
TRK ENGINEERING LTD.
#201 - 17688 66TH AVE
SURREY, BC V3S 7X1, CANADA
CONTACT: DENNIS AMANTEA
PHONE: (604) 574-6452

CONSTRUCTION MANAGER:
CORTEL, LLC
CONTACT: KEN UFTON
PHONE: (415) 860-8583

RECEIVED
NOV 04, 2010
CITY PLANNING COMMISSION
ZONING DIVISION

SHEET INDEX

REV	DWG	NAME
0	T-1	TITLE SHEET
0	A-1	SITE PLAN
0	A-2	ROOF PLAN
0	A-3	SOUTH ELEVATION
0	A-4	EAST ELEVATION
0	A-5	ANTENNA DETAILS

clearwire
4400 CARILLON PT, KIRKLAND, WA

Cortel, LL

TRK ENGINEERING
#201 - 17688 66TH AVE
SURREY, BC V3S 7X1, CANADA
TEL: (604) 574-6452
FAX: (604) 574-6451
TOLL FREE: 1-877-345-4045
EMAIL: mail@trkeng.com
WEB: www.trkeng.com

PROJECT NO:	1040-184
DRAWN BY:	JK
CHECKED BY:	F.H.
CAD FILE:	1040-184T1

SUBMITTALS

0	OCT 25/10	70% REV 0
A	OCT 15/10	70% REV A

THE INFORMATION CONTAINED IN THIS SET OF DOCUMENTS IS PROPRIETARY BY NATURE. USE OR DISCLOSURE OTHER THAN THAT WHICH RELATES TO THE CLIENT NAMED IS STRICTLY PROHIBITED.

AVE SEAL

SITE
STORQUEST - MOD
CA-SFO0126A
4601 SHATTUCK AVE
OAKLAND, CA

SHEET TITLE
TITLE SHEET

SHEET NUMBER
T-1

- CMD10-281 -

ATTACHMENT C

NOTES:

1. SITE PLAN INFORMATION WAS OBTAINED FROM A DRAWING PREPARED BY "KOLL TELECOMMUNICATIONS SERVICES" DATED MAY 28, 1997, AND A DRAWING PREPARED BY J.E. SCHWIGHT & ASSOCIATES, DATED JULY 8, 1997. THIS DRAWING DOES NOT REPRESENT A SURVEY. ALL DIMENSIONS ARE APPROXIMATE ONLY.

TRUE NORTH ARROW SHOWN ON THIS DRAWING IS APPROXIMATE ONLY AND MUST BE VERIFIED BY CONTRACTOR

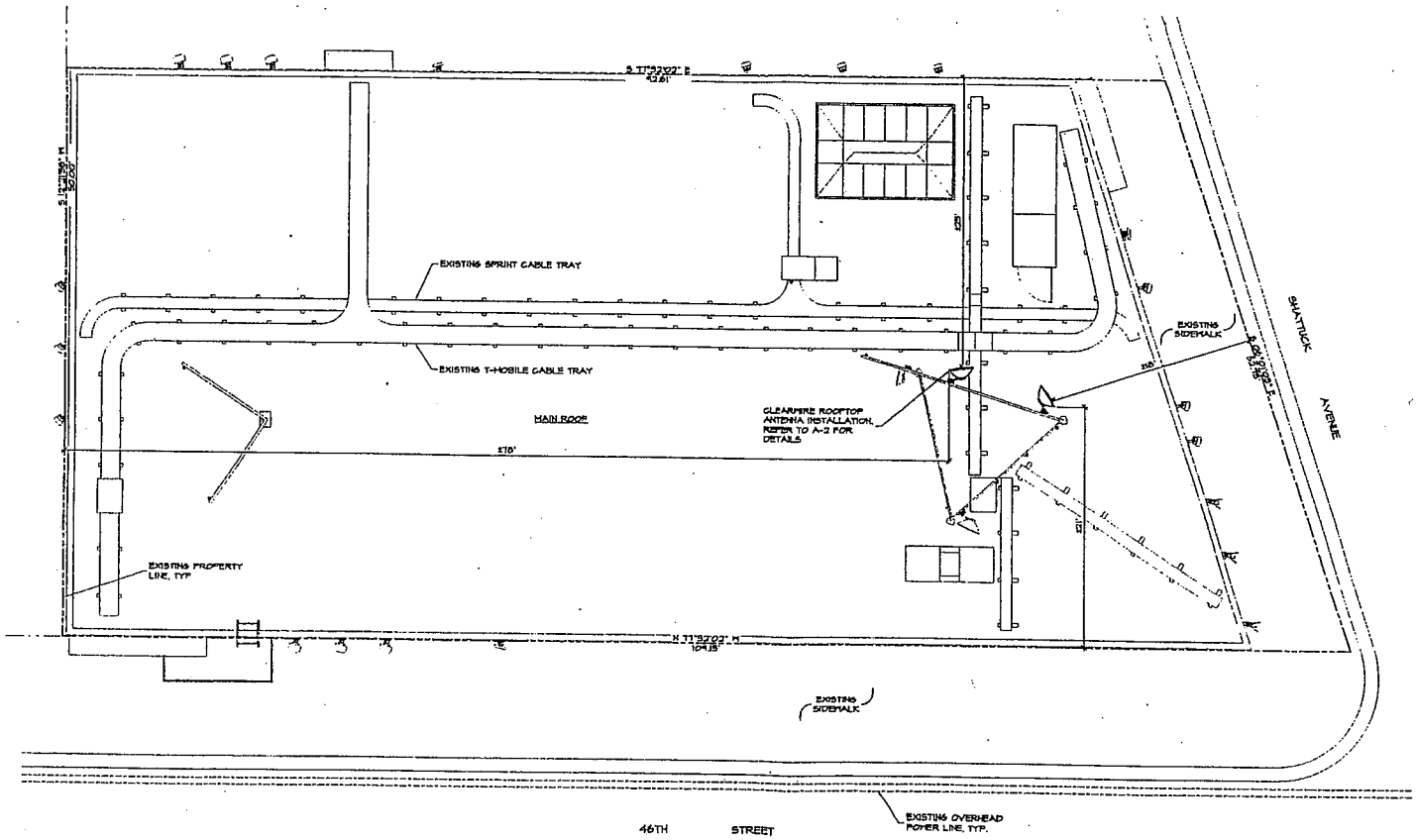

SITE PLAN
3/32"=1'-0"
0 2' 4' 8'

clearwire
4400 CARILLON PT. KIRKLAND, WA

Cortel, LLC

TRK ENGINEERING
#201 - 17855 56TH AVE
SURREY, BC V3S 7X1, CANADA
TEL: (604) 574-6452
FAX: (604) 574-6451
TOLL FREE: 1-877-545-4045
EMAIL: mail@trkeng.com
WEB: www.trkeng.com

PROJECT NO:	1040-184
DRAWN BY:	J.K.
CHECKED BY:	F.H.
CAD FILE:	1040-184A1

SUBMITTALS

0	OCT 25/10	ZD's REV 0
A	OCT 15/10	ZD's REV A

THE INFORMATION CONTAINED IN THIS SET OF DOCUMENTS IS PROPRIETARY BY NATURE. USE OR DISCLOSURE OTHER THAN THAT WHICH RELATES TO THE CLIENT NAMED IS STRICTLY PROHIBITED.

AVE SEAL

SITE

STORQUEST - MOD
CA-SF00126A
4601 SHATTUCK AVE
OAKLAND, CA

SHEET TITLE

SITE PLAN

SHEET NUMBER

A-1

INTERNET SERVICES EXCHANGE POINT INFORMATION

SECTOR	AZIMUTH	DISH SIZE	ANTENNA	QUANTITY	ANTENNA CABLE LENGTH	RAD CENTER
A	9°	2'-0"	ANDREW	1	75'-0"±	72'-4"±
B	74°	2'-0"	ANDREW	1	85'-0"±	72'-4"±

LABEL MARKINGS SHALL BE PLACED:
A. WITHIN 12" OF CABLE AT BOTH ENDS.
B. AT/NEAR TOWER GROUND BAR.
C. EITHER PRIOR TO ENTRY INTO CABINET OR AT CABLE SUPPORT BRIDGE.

NOTES:

1. CONTRACTOR TO PROVIDE ALL REQUIRED HARDWARE NECESSARY TO FACILITATE ANTENNA CABLE ROUTING FROM EQUIPMENT TO ANTENNAS.
2. CONTRACTOR'S WORK SHALL COMPLY WITH ALL APPLICABLE NATIONAL, STATE, AND LOCAL CODES AS ADOPTED BY THE LOCAL AUTHORITY HAVING JURISDICTION (AHJ) FOR THE LOCATION. THE EDITION OF THE AHJ ADOPTED CODES AND STANDARDS IN EFFECT ON THE DATE OF CONTRACT AWARD SHALL GOVERN THE DESIGN.
3. CONTRACTOR SHALL BE RESPONSIBLE FOR PROTECTION OF ROOF MEMBRANE DURING CONSTRUCTION. ALL DAMAGE SHALL BE REPAIRED TO AS NEW CONDITION IN ACCORDANCE WITH STANDARD ROOFING PRACTICES.
4. CONTRACTOR TO SITE VERIFY LOCATION OF CONDUIT AND ANTENNA CABLE ROUTING PRIOR TO CONSTRUCTION.
5. PAINT ANTENNA MOUNTS, ANTENNA CABLES, CONDUITS AND MOUNTING HARDWARE TO MATCH EXISTING BUILDING EXTERIOR.

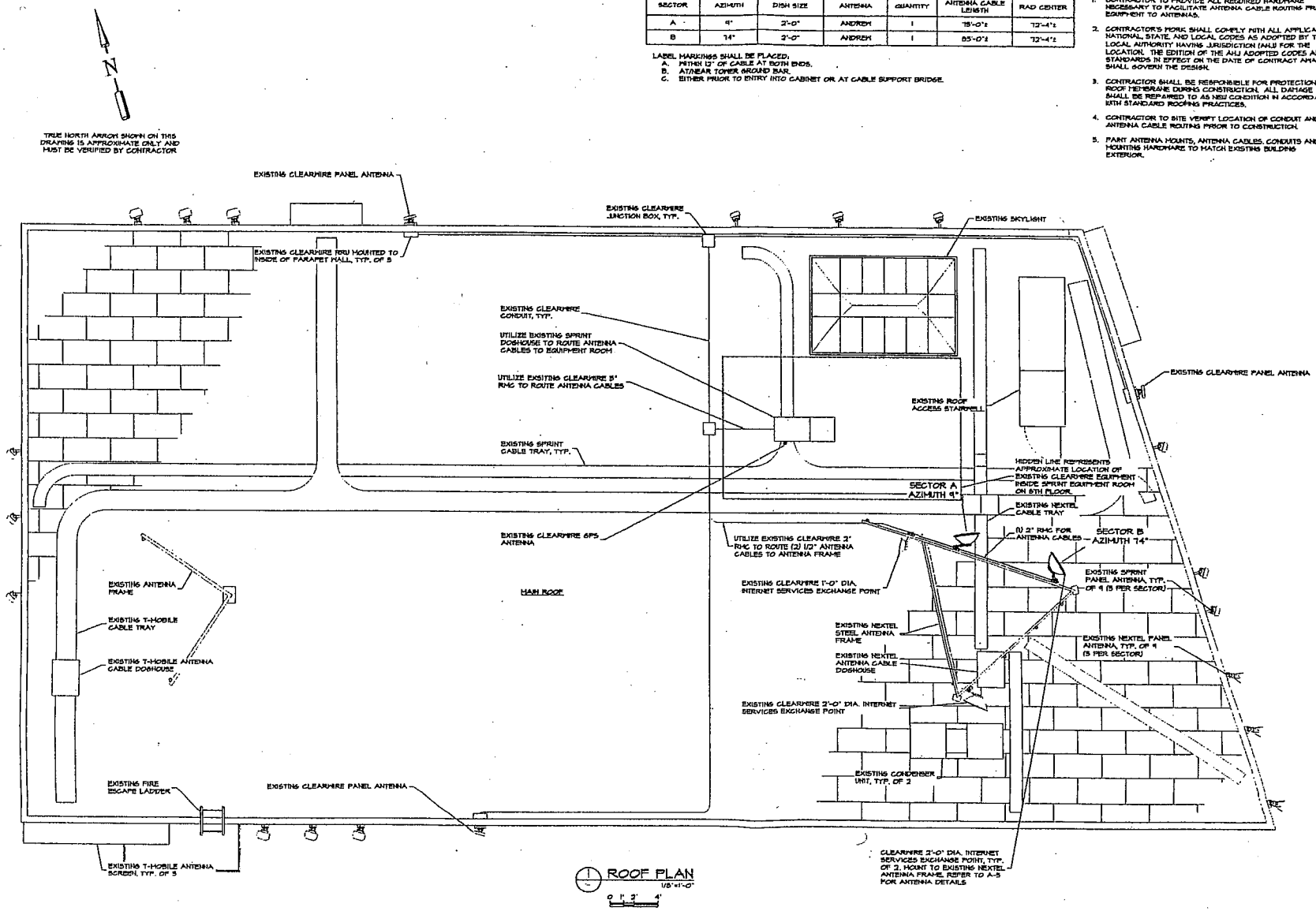

1 ROOF PLAN
1/8"=1'-0"
0 1' 2' 4'

clearwire
4400 CARILLON PT, KIRKLAND, WA

Cortel, LLC

TRK ENGINEERING
#201 - 17685 56TH AVE
SURREY, BC V3S 1X6, CANADA
TEL: (604) 574-6452
FAX: (604) 574-6491
TOLL FREE: 1-877-545-4045
EMAIL: mail@trkeng.com
WEB: www.trkeng.com

PROJECT NO:	1040-184
DRAWN BY:	JK
CHECKED BY:	P.H.
CAD FILE:	1040-184A2

SUBMITTALS

D	OCT 25/10	70% REV D
A	OCT 15/10	70% REV A

THE INFORMATION CONTAINED IN THIS SET OF DOCUMENTS IS PROPRIETARY BY NATURE. A USE OR DISCLOSURE OTHER THAN THAT WHICH RELATES TO THE CLIENT NAMED IS STRICTLY PROHIBITED.

AHJ SEAL

SITE
STORQUEST - MOD
CA-SF00126A
4601 SHATTUCK AVE
OAKLAND, CA

SHEET TITLE
ROOF PLAN

SHEET NUMBER
A-2

NOTES:

1. ELEVATION IS DIAGRAMMATIC ONLY
2. PAINT ANTENNA MOUNTS, EXPOSED ANTENNA CABLES, CONDUITS AND MOUNTING HARDWARE TO MATCH EXISTING BUILDING EXTERIOR.

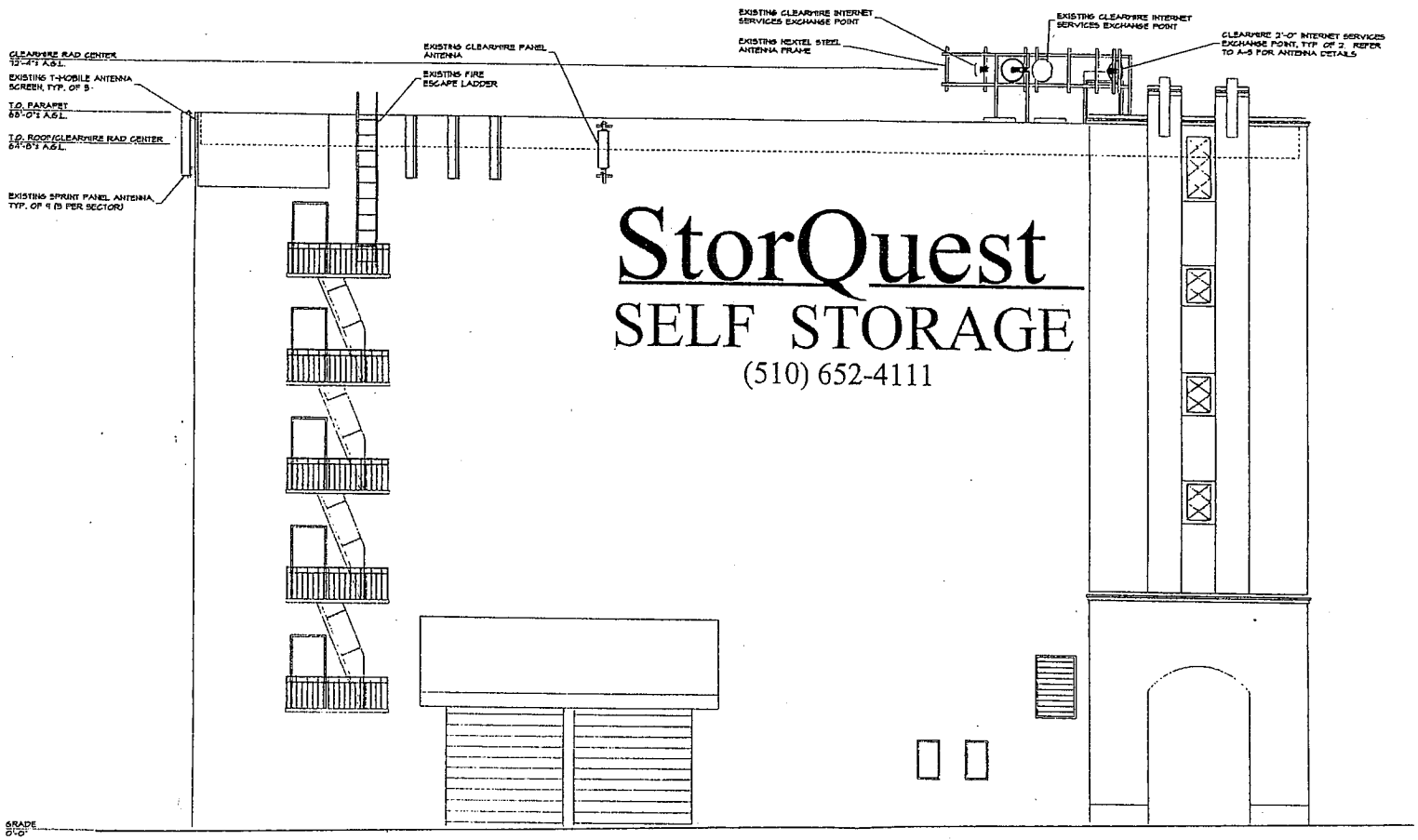

1 SOUTH ELEVATION
3/32"=1'-0"

0 2' 4' 8'

clearwire
4400 CARILLON PT, KIRKLAND, WA

Cortel, LLC

TRK ENGINEERING
#201 - 17688 56TH AVE
SURREY, BC V3S 1X1, CANADA
TEL: (604) 574-6432
FAX: (604) 574-6431
TOLL FREE: 1-877-545-4045
EMAIL: mail@trkeng.com
WEB: www.trkeng.com

PROJECT NO.	1040-184
DRAWN BY:	J.K.
CHECKED BY:	P.H.
CAD FILE:	1040-184A3

SUBMITTALS

0	OCT 23/10	ZD's REV 0
A	OCT 8/10	ZD's REV A

THE INFORMATION CONTAINED IN THIS SET OF DOCUMENTS IS PROPRIETARY BY NATURE. ANY USE OR DISCLOSURE OTHER THAN THAT SPECIFICALLY RELATED TO THE CLIENT NAMED IS STRICTLY PROHIBITED.

AHJ SEAL

SITE

STORQUEST - MOD
CA-SF00126A
4601 SHATTUCK AVE
OAKLAND, CA

SHEET TITLE

SOUTH ELEVATION

SHEET NUMBER

A-3

NOTES:

1. ELEVATION IS DIAGRAMMATIC ONLY.
2. PAINT ANTENNA MOUNTS, EXPOSED ANTENNA CABLES, CONDUITS AND MOUNTING HARDWARE TO MATCH EXISTING BUILDING EXTERIOR.

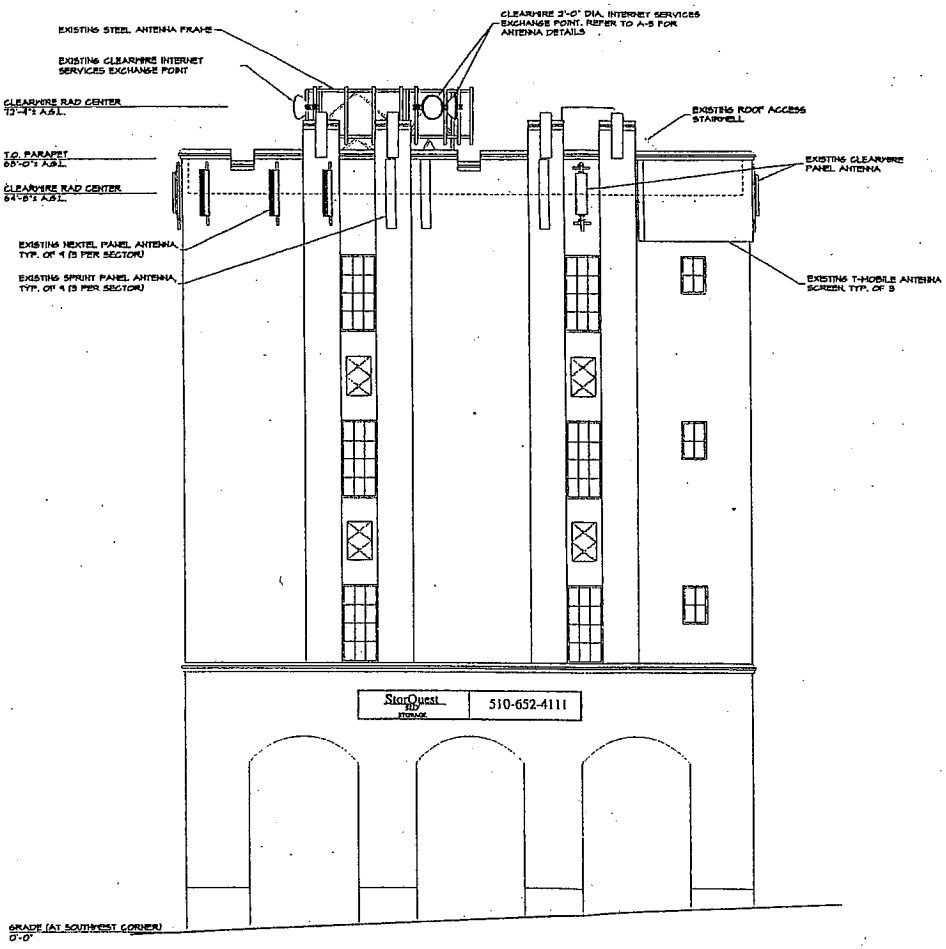

1 EAST ELEVATION
3/32"=1'-0"
0 2' 4' 8'

clearwire
4400 CARILLON PT, KIRKLAND, WA

Cortel, LLC

TRK ENGINEERING
#201 - 17688 66TH AVE
SURREY, BC V3S 7X1, CANADA
TEL: (604) 574-6483
FAX: (604) 574-6481
TOLL FREE: 1-877-545-4045
EMAIL: mail@trkeng.com
WEB: www.trkeng.com

PROJECT NO:	1040-184
DRAWN BY:	J.K.
CHECKED BY:	P.H.
CAD FILE:	1040-184A4

SUBMITTALS

D	OCT 28/10	ZD's REV D
A	OCT 8/10	ZD's REV A

THE INFORMATION CONTAINED IN THIS SET OF DOCUMENTS IS PROPRIETARY BY NATURE. ANY USE OR DISCLOSURE OTHER THAN THAT SPECIFICALLY RELATED TO THE CLIENT NAMED IS STRICTLY PROHIBITED.

AHJ SEAL

SITE

STORQUEST - MOD
CA-SF00126A
4601 SHATTUCK AVE
OAKLAND, CA

SHEET TITLE

EAST ELEVATION

SHEET NUMBER

A-4

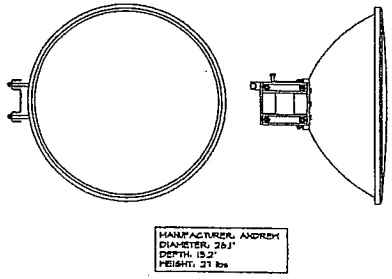

1 2 FT I.S.E.P. SPECIFICATION
N.T.S.

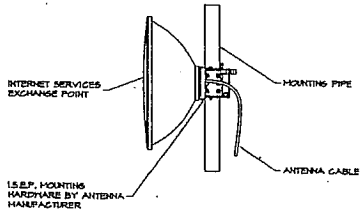

2 GENERIC ANTENNA MOUNTING DETAIL
N.T.S.

clearwire
4400 CARILLON PT. KIRKLAND, WA

Cortel, LLC

TRK ENGINEERING
#201 - 17688 66TH AVE
SURREY, BC V3S 1X1 CANADA
TEL: (604) 574-6432
FAX: (604) 574-6431
TOLL FREE: 1-877-343-4045
EMAIL: mail@trkeng.com
WEB: www.trkeng.com

PROJECT NO:	1040-184
DRAWN BY:	J.K.
CHECKED BY:	F.H.
CAD FILE:	1040-184A5

SUBMITTALS

0	OCT 25/10	22'x REV 0
A	OCT 15/10	22'x REV A

THE INFORMATION CONTAINED IN THIS SET OF DOCUMENTS IS PROPRIETARY BY NATURE. ANY USE OR DISCLOSURE OTHER THAN THAT WHICH RELATES TO THE CLIENT NAMED IS STRICTLY PROHIBITED.

A.I.E. SEAL

SITE

STORQUEST - MOD
CA-SF00126A
4601 SHATTUCK AVE
OAKLAND, CA

SHEET TITLE

ANTENNA DETAILS

SHEET NUMBER

A-5

TRK ENGINEERING

FEDERAL COMMUNICATIONS COMMISSION (FCC) COMPLIANCE STUDY ON RADIO FREQUENCY ELECTROMAGNETIC FIELDS EXPOSURE

Prepared for:

clear
wireless broadband

CA-SFO0126A
STORQUEST - MOD
4601 SHATTUCK AVE
OAKLAND, CA

- CMD10-281 -

ATTACHMENT D

JANUARY 4/11, REV. 0

- 01/07/11 -

1040-189

SITE DESCRIPTION:

Carrier:	Clearwire wireless broadband
Site Address:	4601 Shattuck Ave., Oakland, CA
Type of Service:	MMDS (Multichannel Multipoint Distribution Service)
Sectors:	i) 9° ii) 74°
Antenna Type:	Andrew VHLP2-18
Number of Antennas:	2
Frequencies *(GHz)*:	21.2 - 23.6
Maximum Power:	i) 26 W ERP ii) 513 W ERP
Antenna Height:	72'- 4"± *(radiation center AGL)*

Table 1. Clearwire ISEP RF summary

Clearwire is proposing to install new dish antennas or Internet Service Exchange Points (ISEP) at its existing wireless communication facility on the rooftop of a self storage facility at the above address (Figure 1). Two 2' ISEP antennas will be installed on an existing support frame on the southeast side of the roof. Access to the rooftop is restricted to authorized personnel only.

Figure 1. Facility and surrounding area

Clearwire has existing panel and ISEP antennas on the rooftop. The RF summary for the existing antennas is summarized in Table 2.

Carrier:	Clearwire wireless broadband	
Antenna Type:	i) Kathrein 840 10054 *(panel)*	ii) VHLP1-23, VHLP2-23 *(ISEP)*
Sectors:	i) 0°, 100°, 210°	ii) 221°, 228°
Number of Antennas:	i) 3	ii) 2
Frequencies *(GHz)*:	i) 2.5 – 2.7	ii) 21.2 - 23.6
Maximum Power:	i) 969 W ERP *(per panel)*	ii) 100 W ERP
Antenna Height:	i) 64'- 8"± *(radiation center AGL)*	ii) 72'- 4"± *(radiation center AGL)*

Table 2. Clearwire existing antenna RF summary

There are three other existing wireless facilities with panel antennas installed on the rooftop parapet. The RF summaries for the facilities are shown in the following Tables.

Carrier:	Nextel Communications
Type of Service:	850 MHz ESMR
Antenna Quantity:	9 (3 per sector)
Antenna Type:	Decibel DB844G65ZAXY *(typical)*, EMS FS65-11-XXXA2
Maximum Power:	500 W *(Maximum ERP per sector)*
Antenna Height:	64'-8"± *(Radiation center AGL)*

Table 3. Nextel RF summary

Carrier:	Sprint PCS
Type of Service:	1900 MHz CDMA *(Broadband PCS)*
Antenna Type:	EMS RR65-18-XXDPL2
Number of Antennas:	9 (3 per sector)
Maximum Power:	500 W *(Maximum ERP per sector)*
Antenna Height:	64'-8"± *(Radiation center AGL)*

Table 4. Sprint PCS RF summary

Carrier:	T-Mobile
Type of Service:	1900 MHz GSM/UMTS
Antenna Type:	RFS APX16DWV-16DWV-S-E-A20 *(typical)*
Antenna Quantity:	9 (3 per sector)
Maximum Power:	500 W *(Maximum ERP per technology per sector)*
Antenna Height:	64'-8"± *(Radiation center AGL)*

Table 5. T-Mobile RF summary

PROTOCOL:

This study, and the calculations performed therein, is based on OET Bulletin 65[1] which adopts ANSI C95.1-1992 and NCRP standards. In particular, equation 10 from section 2 of the guideline is used as a model (in conjunction with known antenna radiation patterns) for calculating the power density at different points of interest. This information will be used to judge the RF exposure level incident upon the general population, and any employee present in the area. It should be noted that ground reflection of RF waves has been taken into account.

FCC'S MAXIMUM PERMISSIBLE EXPOSURE (MPE) LIMIT:

In order to evaluate the RF exposure level, the power densities at different locations of interest have been examined. Equation 10 from Bulletin 65 is reproduced here as equation 1:

$$S = \frac{33.4 F^2 ERP}{R^2} \qquad (1)$$

Where:
S = *Power density [$\mu W/cm^2$]*
ERP = *Effective radiated power [W]*
R = *Distance [m]*
F = *Relative field factor (relative numeric gain)*

Scenario 1: *Standing near the facility on street level*

The RF exposure level of a six-foot tall person standing on ground level close to the building is evaluated. For the worst-case scenario, we assume that all the antennas are transmitting the maximum number of channels at the same time, with each channel at its maximum power level. In addition, please refer to scenario 1 in appendix A for the complete geometry and analysis. The highest exposure location is found to be approximately 219' from a sector 2 Clearwire antenna. The calculations of maximum cumulative power density for the new and existing antennas are summarized in Table 6.

Service	Max. ERP	F^2	R (m)	S ($\mu W/cm^2$) (from eq. 1)	MPE %
clearwire (panel)	969 W	-15 dB (0.0501)	69.1	0.3396	0.0340
clearwire ISEP	513 W	-37 dB (0.0002)	69.8	0.0007	0.0001
Nextel	500 W	-1 dB (0.7943)	69.1	2.7781	0.4790
Sprint	500 W	-12 dB (0.0631)	69.1	0.2207	0.0221
T-Mobile	1000W	-14 dB (0.0398)	69.1	0.2784	0.0278
Total					0.5630

Table 6. Worst-case predicted power density values for scenario 1.

[1] Cleveland, Robert F, et al. Evaluating Compliance with FCC Guidelines for Human Exposure to Radiofrequency Electromagnetic Fields. OET Bulletin 65, Edition 97-01, August 1997.

The Maximum Permissible Exposure (MPE) limit for 1900 MHz and 2500 MHz facilities[2] for general population/uncontrolled exposure is 1000 μW/cm² and 580 μW/cm² for 850 MHz facilities[3] The maximum cumulative power density for the proposed and existing antennas is calculated to be 0.56% of the MPE limit.

Scenario 2: *Nearby building rooftops*

There are commercial and residential buildings in the surrounding area. The RF exposure levels on nearby rooftops are evaluated. We assume again, all antennas within a sector are transmitting with maximum power level. Please refer to scenario 2 in appendix A for the analysis. The highest exposure location is on the rooftop of the nearest building north of the subject building. The calculations for the maximum possible power density are shown in Table 7.

Service	Max. ERP	F^2	R (m)	S (μW/cm²) (from eq. 1)	MPE %
clearwire (panel)	969 W	-13 dB (0.0501)	38.2	1.1112	0.1111
clearwire ISEP	26 W	-37 dB (0.0002)	38.8	0.0001	0.0000
Nextel	500 W	-1 dB (0.7943)	38.5	8.9491	1.5429
Sprint	500 W	-12 dB (0.0631)	39.1	0.6893	0.0689
T-Mobile	1000 W	-15 dB (0.0316)	38.2	0.7233	0.0723
Total					1.7952

Table 7. Worst-case predicted power density values for scenario 2.

The maximum cumulative power density for the Clearwire antennas and the existing antennas is calculated to be 1.80% of the MPE limit. There is a relatively low level of RF energy directed either above or below the horizontal plane of the antennas, and there are no locations in the surrounding areas near the facilities that will have RF exposure levels close to the MPE limit.

Scenario 3: *Facility rooftop*

The radiation center of a the Clearwire ISEP antennas is approximately 7'-8" from the roof deck. The RF exposure level of different locations on the rooftop is evaluated. Please refer to scenario 3 in appendix A for the analysis. The highest exposure location on the facility rooftop is approximately 1' in front of a proposed ISEP antenna. The calculations for the maximum possible power density are shown in Table 8.

Service	Max. ERP	F^2	R (m)	S (μW/cm²) (from eq. 1)	MPE %
clearwire ISEP	513 W	-43 dB (0.0001)	0.6	4.7595	0.4760
Total					0.4760

Table 8. Worst-case predicted power density values for scenario 3.

The existing panel antennas mounted on the exterior parapet wall will have insignificant RF contribution to the facility rooftop. There are no locations on the rooftop where person may be exposed within the main beam path of the panel antennas. The maximum power density for an antenna is calculated to be 0.48% of the general population/uncontrolled MPE limit.

[2] Ibid., page 67.
[3] Ibid., page 67.

Conclusion:

Under "worst-case" conditions, the calculations shown above predict that the maximum possible RF exposure is 1.80% of the MPE limit for general population/uncontrolled exposure. There will be less RF exposure on the ground level or nearby buildings as a person moves away from the site. Therefore, the proposed modifications to Clearwire's facility in co-location with existing facilities will comply with the general population/uncontrolled limit.

FCC COMPLIANCE:

The general population/uncontrolled exposure near the antennas, including persons on the street level, in nearby open areas, and inside or on existing nearby buildings will have RF exposure much lower than the "worst-case" scenario, which is only a small percentage of the MPE limit.

As for trained persons or transient workers, they will be made fully aware of the potential for RF exposure and can choose to exercise control over their exposure that is within the occupational/controlled limits.

The proposed site will operate within the current acceptable thresholds as established by FCC.

REGISTERED PROFESSIONAL ENGINEER
SEI YUEN SYLVAN WONG
16850
EXP. 12/31/12
ELECTRICAL
STATE OF CALIFORNIA

January 5, 2011

Sei Yuen Sylvan Wong, PE
California PE Reg. No. E 16850

APPENDIX A

CA-SFO0126A Storquest - Mod

Scenario 1: Surrounding Area of the Facility

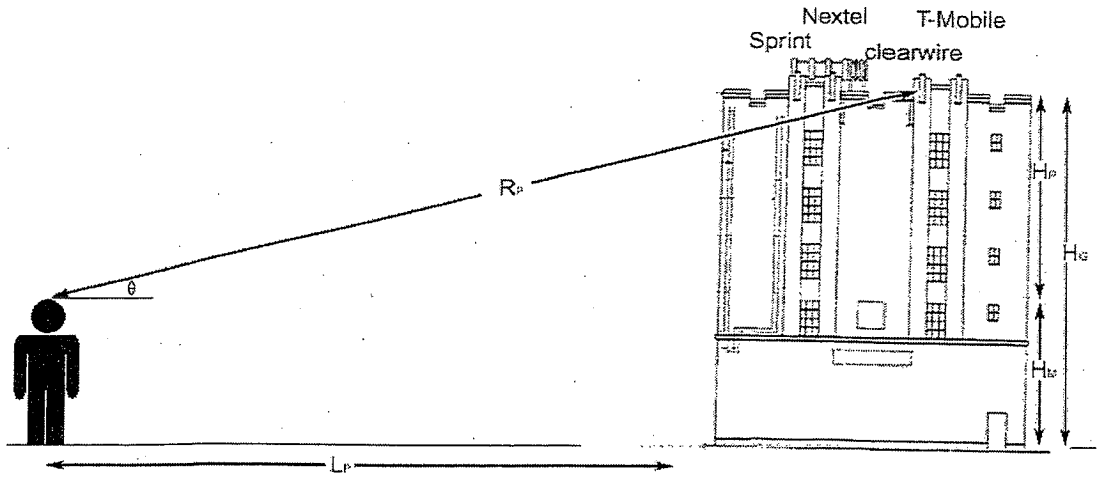

Sector 2:

Location on rooftop, L_P is 5 ft at Θ= 85 °

Service Provider	Height H_G, ft	Height H_P, ft	Max. ERP	Angle Θ	F^2	R_P(m)	S (μW/cm2)	MPE%
clearwire panel	64.67	58.67	969.0	Θ = 85 °	-35 dB (0.0003)	18.0	0.0300	0.0030
clearwire ISEP	72.33	66.33	513.0	Θ = 86 °	-60 dB (0.0000)	20.3	0.0000	0.0000
Nextel	64.67	58.67	500.0	Θ = 85 °	-32 dB (0.0006)	18.0	0.0309	0.0053
Sprint PCS	64.67	58.67	500.0	Θ = 85 °	-28 dB (0.0016)	18.0	0.0825	0.0083
T-Mobile	64.67	58.67	1000.0	Θ = 85 °	-34 dB (0.0004)	18.0	0.0412	0.0041
						Total		0.0207

Location on rooftop, L_P is 16 ft at Θ= 75 °

Service Provider	Height H_G, ft	Height H_P, ft	Max. ERP	Angle Θ	F^2	R_P(m)	S (μW/cm2)	MPE%
clearwire panel	64.67	58.67	969.0	Θ = 75 °	-30 dB (0.0010)	18.5	0.0946	0.0095
clearwire ISEP	72.33	66.33	513.0	Θ = 77 °	-55 dB (0.0000)	20.8	0.0000	0.0000
Nextel	64.67	58.67	500.0	Θ = 75 °	-22 dB (0.0063)	18.5	0.3074	0.0530
Sprint PCS	64.67	58.67	500.0	Θ = 75 °	-21 dB (0.0079)	18.5	0.3855	0.0386
T-Mobile	64.67	58.67	1000.0	Θ = 75 °	-33 dB (0.0005)	18.5	0.0488	0.0049
						Total		0.1060

Location on rooftop, L_P is 34 ft at Θ= 60 °

Service Provider	Height H_G, ft	Height H_P, ft	Max. ERP	Angle Θ	F^2	R_P(m)	S (μW/cm2)	MPE%
clearwire panel	64.67	58.67	969.0	Θ = 60 °	-30 dB (0.0010)	20.7	0.0755	0.0076
clearwire ISEP	72.33	66.33	513.0	Θ = 63 °	-43 dB (0.0001)	22.7	0.0033	0.0003
Nextel	64.67	58.67	500.0	Θ = 60 °	-16 dB (0.0251)	20.7	0.9782	0.1687
Sprint PCS	64.67	58.67	500.0	Θ = 60 °	-24 dB (0.0040)	20.7	0.1559	0.0156
T-Mobile	64.67	58.67	1000.0	Θ = 60 °	-32 dB (0.0006)	20.7	0.0468	0.0047
						Total		0.1969

Location on rooftop, L_P is 59 ft at Θ= 45 °

Service Provider	Height H_G, ft	Height H_P, ft	Max. ERP	Angle Θ	F^2	R_P(m)	S (μW/cm2)	MPE%
clearwire panel	64.67	58.67	969.0	Θ = 45 °	-25 dB (0.0032)	25.3	0.1618	0.0162
clearwire ISEP	72.33	66.33	513.0	Θ = 49 °	-42 dB (0.0001)	27.0	0.0024	0.0002
Nextel	64.67	58.67	500.0	Θ = 45 °	-18 dB (0.0158)	25.3	0.4122	0.0711
Sprint PCS	64.67	58.67	500.0	Θ = 45 °	-21 dB (0.0079)	25.3	0.2061	0.0206
T-Mobile	64.67	58.67	1000.0	Θ = 45 °	-28 dB (0.0016)	25.3	0.0835	0.0084
						Total		0.1165

Location on rooftop, L_P is 102 ft at Θ= 30 °

Service Provider	Height H_G, ft	Height H_P, ft	Max. ERP	Angle Θ	F^2	R_P(m)	S (μW/cm2)	MPE%
clearwire panel	64.67	58.67	969.0	Θ = 30 °	-14 dB (0.0398)	35.8	1.0050	0.1005
clearwire ISEP	72.33	66.33	513.0	Θ = 33 °	-42 dB (0.0001)	37.0	0.0013	0.0001
Nextel	64.67	58.67	500.0	Θ = 30 °	-8 dB (0.1585)	35.8	2.0653	0.3561
Sprint PCS	64.67	58.67	500.0	Θ = 30 °	-14 dB (0.0398)	35.8	0.5186	0.0519
T-Mobile	64.67	58.67	1000.0	Θ = 30 °	-23 dB (0.0050)	35.8	0.1303	0.0130
						Total		0.5216

Location on rooftop, L_P is 219 ft at Θ= 15 °

Service Provider	Height H_G, ft	Height H_P, ft	Max. ERP	Angle Θ	F^2	R_P(m)	S (μW/cm2)	MPE%
clearwire panel	64.67	58.67	969.0	Θ = 15 °	-13 dB (0.0501)	69.1	0.3396	0.0340
clearwire ISEP	72.33	66.33	513.0	Θ = 17 °	-37 dB (0.0002)	69.8	0.0007	0.0001
Nextel	64.67	58.67	500.0	Θ = 15 °	-1 dB (0.7943)	69.1	2.7781	0.4790
Sprint PCS	64.67	58.67	500.0	Θ = 15 °	-12 dB (0.0631)	69.1	0.2207	0.0221
T-Mobile	64.67	58.67	1000.0	Θ = 15 °	-14 dB (0.0398)	69.1	0.2784	0.0278
						Total		0.5630

Location on rooftop, L_P is 417 ft at Θ= 8 °

Service Provider	Height H_G, ft	Height H_P, ft	Max. ERP	Angle Θ	F^2	R_P(m)	S (μW/cm2)	MPE%
clearwire panel	64.67	58.67	969.0	Θ = 8 °	-10 dB (0.1000)	128.5	0.1960	0.0196
clearwire ISEP	72.33	66.33	513.0	Θ = 9 °	-30 dB (0.0010)	128.9	0.0010	0.0001
Nextel	64.67	58.67	500.0	Θ = 8 °	0 dB (1.0000)	128.5	1.0114	0.1744
Sprint PCS	64.67	58.67	500.0	Θ = 8 °	-4 dB (0.3981)	128.5	0.4026	0.0403
T-Mobile	64.67	58.67	1000.0	Θ = 8 °	-3 dB (0.5012)	128.5	1.0138	0.1014
						Total		0.3358

Location on rooftop, L_P is 671 ft at Θ= 5 °

Service Provider	Height H_G, ft	Height H_P, ft	Max. ERP	Angle Θ	F^2	R_P(m)	S (μW/cm2)	MPE%
clearwire panel	64.67	58.67	969.0	Θ = 5 °	-3 dB (0.5012)	205.2	0.3852	0.0385
clearwire ISEP	72.33	66.33	513.0	Θ = 6 °	-26 dB (0.0025)	205.4	0.0010	0.0001
Nextel	64.67	58.67	500.0	Θ = 5 °	0 dB (1.0000)	205.2	0.3966	0.0684
Sprint PCS	64.67	58.67	500.0	Θ = 5 °	0 dB (1.0000)	205.2	0.3966	0.0397
T-Mobile	64.67	58.67	1000.0	Θ = 5 °	0 dB (1.0000)	205.2	0.7932	0.0793
						Total		0.2260

Scenario 2: Nearby Buildings/Rooftop

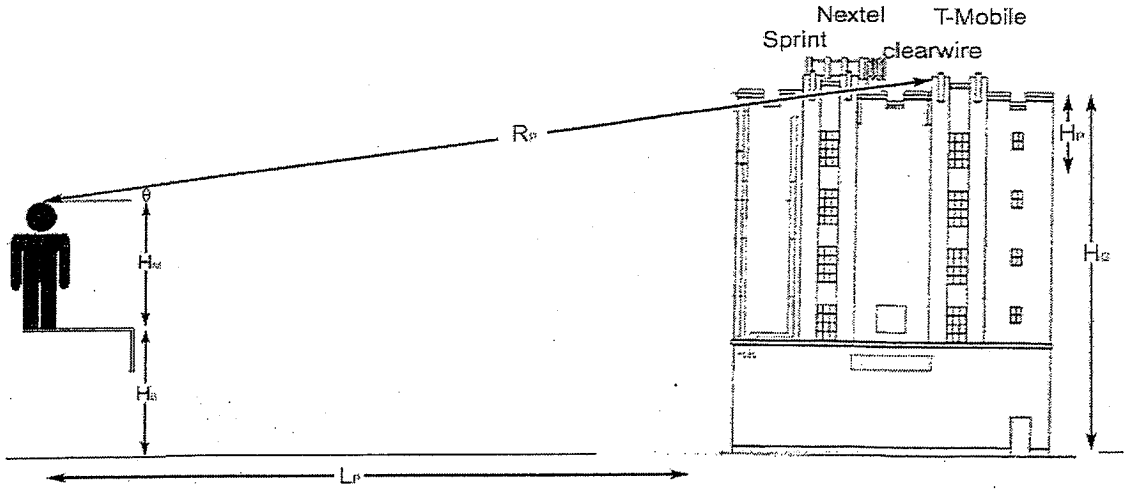

Location 1: Nearest rooftop within Sector 1

H_B= 20.0 ft

Horizontal distance from rooftop, L_P is 22 ft at Θ= 60 °

Service Provider	Height H_G, ft	Height H_P, ft	Max. ERP	Angle Θ	F^2	R_P(m)	S (μW/cm2)	MPE%
clearwire panel	64.67	38.67	969.0	Θ = 60 °	-30 dB (0.0010)	13.6	0.1750	0.0175
clearwire ISEP	72.33	46.33	26.0	Θ = 65 °	-46 dB (0.0000)	15.6	0.0000	0.0000
Nextel: L_P is 22 ft								
Nextel	64.67	38.67	500.0	Θ = 60 °	-26 dB (0.0025)	13.6	0.2257	0.0389
Sprint: L_P is 45 ft								
Sprint	64.67	38.67	500.0	Θ = 41 °	-20 dB (0.0100)	18.1	0.5098	0.0510
T-Mobile: L_P is 20 ft								
T-Mobile	64.67	38.67	1000.0	Θ = 63 °	-32 dB (0.0006)	13.3	0.1133	0.0113
						Total		0.1187

Location 2: Rooftop within Sector 1

H_B= 30.0 ft

Horizontal distance from rooftop, L_P is 122 ft at Θ= 13 °

Service Provider	Height H_G, ft	Height H_P, ft	Max. ERP	Angle Θ	F^2	R_P(m)	S (μW/cm2)	MPE%
clearwire panel	64.67	28.67	969.0	Θ = 13 °	-13 dB (0.0501)	38.2	1.1112	0.1111
clearwire ISEP	72.33	36.33	26.0	Θ = 17 °	-37 dB (0.0002)	38.8	0.0001	0.0000
Nextel: L_P is 123 ft								
Nextel	64.67	28.67	500.0	Θ = 13 °	-1 dB (0.7943)	38.5	8.9491	1.5429
Sprint: L_P is 125 ft								
Sprint	64.67	28.67	500.0	Θ = 13 °	-12 dB (0.0631)	39.1	0.6893	0.0689
T-Mobile: L_P is 122 ft								
T-Mobile	64.67	28.67	1000.0	Θ = 13 °	-15 dB (0.0316)	38.2	0.7233	0.0723
						Total		1.7952

Location 3: Rooftop within Sector 1

H_B= 30.0 ft

Horizontal distance from rooftop, L_P is 209 ft at Θ= 8 °

Service Provider	Height H_G, ft	Height H_P, ft	Max. ERP	Angle Θ	F^2	R_P(m)	S (μW/cm2)	MPE%
clearwire panel	64.67	28.67	969.0	Θ = 8 °	-10 dB (0.1000)	64.3	0.7828	0.0783
clearwire ISEP	72.33	36.33	26.0	Θ = 10 °	-32 dB (0.0006)	64.7	0.0001	0.0000
Nextel: L_P is 211 ft								
Nextel	64.67	28.67	500.0	Θ = 8 °	0 dB (1.0000)	64.9	3.9649	0.6836
Sprint: L_P is 208 ft								
Sprint	64.67	28.67	500.0	Θ = 8 °	-4 dB (0.3981)	64.0	1.6231	0.1623
T-Mobile: L_P is 208 ft								
T-Mobile	64.67	28.67	1000.0	Θ = 8 °	-3 dB (0.5012)	64.0	4.0869	0.4087
						Total		1.3329

Location 4: Rooftop within Sector 2

H_B= 20.0 ft

Horizontal distance from rooftop, L_P is 249 ft at Θ= 9 °

Service Provider	Height H_G, ft	Height H_P, ft	Max. ERP	Angle Θ	F^2	R_P(m)	S (μW/cm2)	MPE%
clearwire panel	64.67	38.67	969.0	Θ = 9 °	-10 dB (0.1000)	76.8	0.5487	0.0549
clearwire ISEP	72.33	46.33	513.0	Θ = 11 °	-32 dB (0.0006)	77.2	0.0017	0.0002
Nextel: L_P is 249 ft								
Nextel	64.67	38.67	500.0	Θ = 9 °	-4 dB (0.3981)	76.8	1.1272	0.1943
Sprint: L_P is 250 ft								
Sprint	64.67	38.67	500.0	Θ = 9 °	-4 dB (0.3981)	77.1	1.1184	0.1118
T-Mobile: L_P is 248 ft								
T-Mobile	64.67	38.67	1000.0	Θ = 9 °	-5 dB (0.3162)	76.5	1.8046	0.1805
						Total		0.5417

Location 5: Nearest rooftop within Sector 3

H_B= 20.0 ft

Horizontal distance from rooftop, L_P is 72 ft at Θ= 28 °

Service Provider	Height H_G, ft	Height H_P, ft	Max. ERP	Angle Θ	F^2	R_P(m)	S (μW/cm2)	MPE%
clearwire panel	64.67	38.67	969.0	Θ = 28 °	-15 dB (0.0316)	24.9	1.6495	0.1650
clearwire ISEP	72.33	46.33	100.0	Θ = 33 °	-42 dB (0.0001)	26.1	0.0005	0.0001
Nextel: L_P is 74 ft								
Nextel	64.67	38.67	500.0	Θ = 28 °	-7 dB (0.1995)	25.5	5.1236	0.8834
T-Mobile: L_P is 80 ft								
T-Mobile	64.67	38.67	1000.0	Θ = 26 °	-23 dB (0.0050)	27.1	0.2274	0.0227
						Total		1.0712

Location 6: Rooftop within Sector 3

H_B= 20.0 ft

Horizontal distance from rooftop, L_P is 198 ft at Θ= 11 °

Service Provider	Height H_G, ft	Height H_P, ft	Max. ERP	Angle Θ	F^2	R_P(m)	S (μW/cm2)	MPE%
clearwire panel	64.67	38.67	969.0	Θ = 11 °	-13 dB (0.0501)	61.5	0.4287	0.0429
clearwire ISEP	72.33	46.33	100.0	Θ = 13 °	-34 dB (0.0004)	62.0	0.0003	0.0000
Nextel: L_P is 196 ft								
Nextel	64.67	38.67	500.0	Θ = 11 °	-11 dB (0.0794)	60.9	0.3575	0.0616
T-Mobile: L_P is 195 ft								
T-Mobile	64.67	38.67	1000.0	Θ = 11 °	-10 dB (0.1000)	60.6	0.9095	0.0910
						Total		0.1955

Scenario 3: Facility Rooftop

person's height (H_M) = 6 ft

Sector 2:

Location on rooftop, L_P is 0 ft at Θ= 85 °

Service Provider	Height H_G, ft	Height H_P, ft	Max. ERP	Angle Θ	F^2	R_P(m)	S (μW/cm2)	MPE%
clearwire ISEP	7.67	1.67	513.0	Θ = 85 °	-60 dB (0.0000)	0.5	0.0000	0.0000
						Total		0.0000

Location on rooftop, L_P is 0 ft at Θ= 75 °

Service Provider	Height H_G, ft	Height H_P, ft	Max. ERP	Angle Θ	F^2	R_P(m)	S (μW/cm2)	MPE%
clearwire ISEP	7.67	1.67	513.0	Θ = 75 °	-55 dB (0.0000)	0.5	0.0000	0.0000
						Total		0.0000

Location on rooftop, L_P is 1 ft at Θ= 60 °

Service Provider	Height H_G, ft	Height H_P, ft	Max. ERP	Angle Θ	F^2	R_P(m)	S (μW/cm2)	MPE%
clearwire ISEP	7.67	1.67	513.0	Θ = 60 °	-43 dB (0.0001)	0.6	4.7595	0.4760
						Total		0.4760

Location on rooftop, L_P is 2 ft at Θ= 45 °

Service Provider	Height H_G, ft	Height H_P, ft	Max. ERP	Angle Θ	F^2	R_P(m)	S (μW/cm2)	MPE%
clearwire ISEP	7.67	1.67	513.0	Θ = 45 °	-42 dB (0.0001)	0.7	3.4968	0.3497
						Total		0.3497

Location on rooftop, L_P is 3 ft at Θ= 30 °

Service Provider	Height H_G, ft	Height H_P, ft	Max. ERP	Angle Θ	F^2	R_P(m)	S (μW/cm2)	MPE%
clearwire ISEP	7.67	1.67	513.0	Θ = 30 °	-42 dB (0.0001)	1.0	1.7134	0.1713
						Total		0.1713

Location on rooftop, L_P is 6 ft at Θ= 15 °

Service Provider	Height H_G, ft	Height H_P, ft	Max. ERP	Angle Θ	F^2	R_P(m)	S (μW/cm2)	MPE%
clearwire ISEP	7.67	1.67	513.0	Θ = 15 °	-36 dB (0.0003)	2.0	1.2851	0.1285
						Total		0.1285

Location on rooftop, L_P is 9 ft at Θ= 10 °

Service Provider	Height H_G, ft	Height H_P, ft	Max. ERP	Angle Θ	F^2	R_P(m)	S (μW/cm2)	MPE%
clearwire ISEP	7.67	1.67	513.0	Θ = 10 °	-31 dB (0.0008)	2.9	1.6299	0.1630
						Total		0.1630

Location on rooftop, L_P is 19 ft at Θ= 5 °

Service Provider	Height H_G, ft	Height H_P, ft	Max. ERP	Angle Θ	F^2	R_P(m)	S (μW/cm2)	MPE%
clearwire ISEP	7.67	1.67	513.0	Θ = 5 °	-26 dB (0.0025)	5.8	1.2734	0.1273
						Total		0.1273

KATHREIN
SCALA DIVISION

840 10054

87° XX-pol Panel Antenna
2496–2690 MHz

Kathrein Scala's XX-polarized adjustable electrical downtilt antennas offer the carrier the ability to tailor sites for optimum performance. Using variable downtilt, only a few models need be procured to accommodate the needs of widely varying conditions. Remotely controlled downtilt is available as a retrofitable option.

- 0–10° electrical downtilt range.
- DC Grounded metallic parts for impulse suppression.
- No moving electrical connections.
- Optional remote downtilt control.

Specifications:

Frequency range	2496–2690 MHz
Gain	2 x 16 dBi
Impedance	50 ohms
VSWR	< 1.5:1
Intermodulation (2x20w)	IM3:< -150 dBc
Polarization	+45° and -45°
Front-to-back ratio	>23 dB typical
Maximum input power	300 watts (at 50°C)
+45° and -45° polarization horizontal beamwidth	87 degrees at midband (half power)
+45° and -45° polarization vertical beamwidth	7 degrees at midband (half power)
Electrical downtilt continously adjustable	0–10 degrees
Connector	4 x 7-16 DIN female
Sidelobe suppression for first sidelobe above horizon	0° 4° 8° 10° 15 15 15 15 dB (typical)
Null fill	> -1 dBi to 12° below horizon (typical) (17 dB below 16 dBi main beam)
Isolation	>30 dB
Weight	30 lb (13.6 kg)
Dimensions	42 x 12.7 x 2.8 inches (1067 x 323 x 71 mm)
Equivalent flat plate area	4.8 ft² (0.45 m²)
Wind survival rating*	120 mph (200 kph)
Shipping dimensions	48 x 13.3 x 5.1 inches (1220 x 337 x 130 mm)
Shipping weight	34 lb (15.4 kg)
Mounting	Fixed and tilt-mount options are available for 2 to 5.7 inch (50 to 145 mm) OD masts.

See reverse for order information.

* Mechanical design is based on environmental conditions as stipulated in EIA-222-F (June 1996) and/or ETS 300 019-1-4 which include the static mechanical load imposed on an antenna by wind at maximum velocity. See the Engineering Section of the catalog for further details.

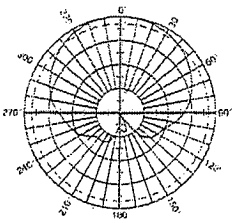

Horizontal pattern
±45°- polarization
0° electrical downtilt

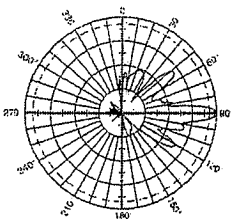

Vertical pattern
±45°- polarization
0° electrical downtilt

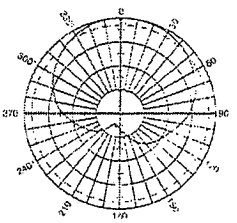

Horizontal pattern
±45°-.polarization
5° electrical downtilt

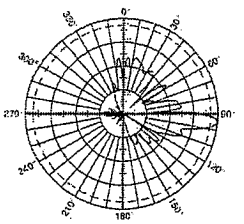

Vertical pattern
±45°- polarization
5° electrical downtilt

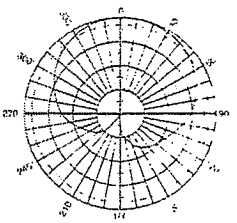

Horizontal pattern
±45°- polarization
10° electrical downtilt

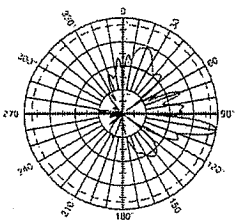

Vertical pattern
±45°- polarization
10° electrical downtilt

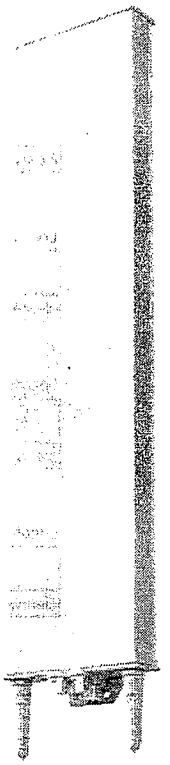

TÜV
RoHS
Lead-Free

11098-A

Kathrein Inc., Scala Division Post Office Box 4580 Medford, OR 97501 (USA) Phone: (541) 779-6500 Fax: (541) 779-3991
Email: communications@kathrein.com Internet: www.kathrein-scala.com

Product Specifications

ANDREW®
A CommScope Company

VHLP1-23

0.3 m | 1 ft ValuLine® High Performance Low Profile Antenna, single-polarized, 21.200–23.600 GHz

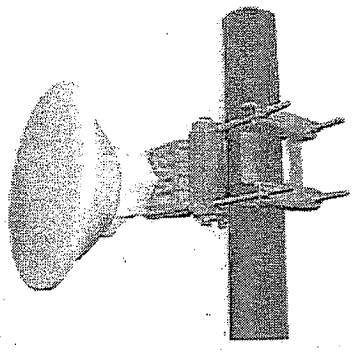

CHARACTERISTICS

General Specifications

Antenna Type	VHLP - ValuLine® High Performance Low Profile Antenna, single-polarized
Diameter, nominal	0.3 m | 1 ft
Polarization	Single

Electrical Specifications

Beamwidth, Horizontal	3.0 °
Beamwidth, Vertical	3.0 °
Cross Polarization Discrimination (XPD)	30 dB
Electrical Compliance	Brazil Anatel Class 2 | Canada SRSP 321.8 Part B | ETSI 302 217 Class 3 | US FCC Part 101A
Front-to-Back Ratio	62 dB
Gain, Low Band	34.7 dBi
Gain, Mid Band	35.3 dBi
Gain, Top Band	35.9 dBi
Operating Frequency Band	21.200 – 23.600 GHz
Radiation Pattern Envelope Reference (RPE)	7014A
Return Loss	17.7 dB
VSWR	1.30

Mechanical Specifications

Fine Azimuth Adjustment	±10°
Fine Elevation Adjustment	±25°
Mounting Pipe Diameter	50 mm–115 mm | 2 in–4.5 in
Net Weight	7 kg | 14 lb

©2010 CommScope, Inc. All rights reserved.
All trademarks identified by ® or ™ are registered trademarks or trademarks, respectively, of CommScope.All specifications are subject to change.
See www.commscope.com/andrew for the most current information.

ANDREW®

PRODUCT SPECIFICATION

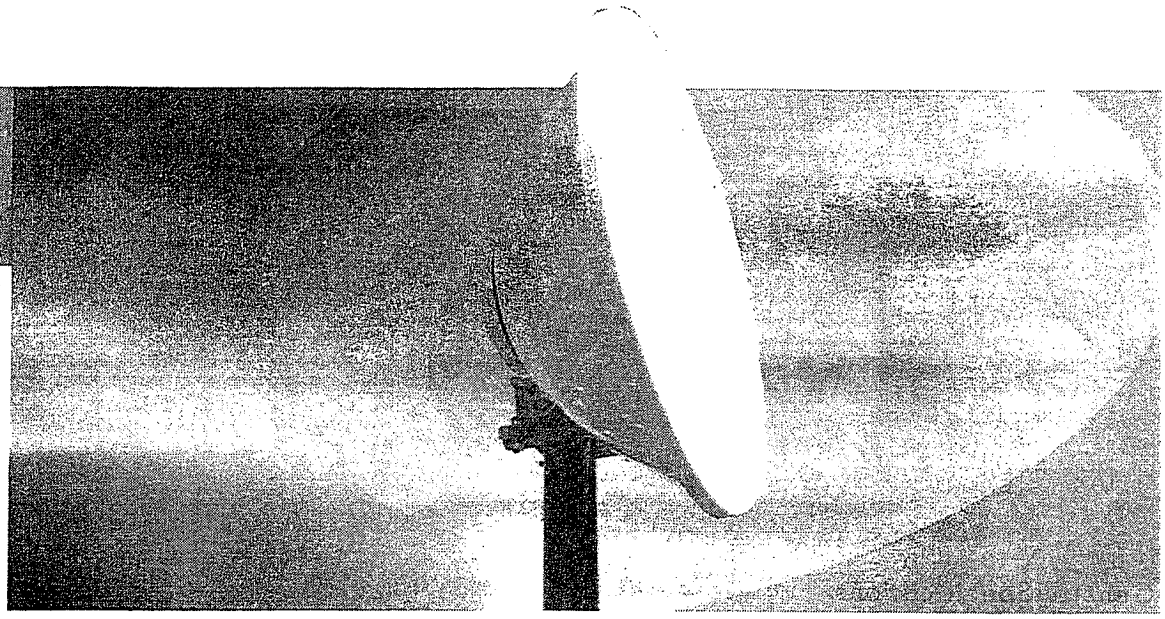

ValuLine® III Next Generation Antennas VHLP2

SPECIFICATIONS

	VHLP2-7W	VHLP2-10W	VHLP2-11	VHLP2-13	VHLP2-15	VHLP2-18	VHLP2-23	VHLP2-26	VHLP2-28	VHLP2-32	VHLP2-38
Frequency Band, GHz	7.125–8.5	10.55–10.68	10.7–11.7	12.70–13.25	14.25–15.35	17.7–19.7	21.2–23.6	24.25–26.5	27.5–29.5	31.8–33.4	37.0–40.0
Bottom Band Gain, dBi	29.5	33.7	34.0	35.6	36.5	38.3	39.8	40.8	41.8	43.4	44.6
Mid Band Gain, dBi	30.7	33.8	34.4	35.8	36.8	38.7	40.4	41.2	42.2	43.7	45.2
Top Band Gain, dBi	31.9	34.3	35.0	36.0	37.2	39.1	41.0	41.8	42.7	44.0	45.8
Beamwidth, degrees	4.7	3.7	3.3	2.7	2.5	2.1	1.7	1.5	1.3	1.0	0.9
Front/Back, dB	57	56	60	62	65	67	66	68	68	61	66
XPD, dB	32	30	30	30	30	30	30	30	30	30	30
Return Loss, dB	17.7	17.7	17.7	17.7	17.7	17.7	17.7	17.7	17.7	17.7	17.7
Regulatory Compliance											
ETSI Class	R1 C3	R1 C2	R1 C3	R1 C3	R2 C3	R2 C3	R3 C3	R4 C3	R4 C3	R5 C3B	R5 C3B
FCC Part 101	N/A	CAT A*	CAT B	N/A	N/A	CAT A	CAT A	CAT A	N/A	N/A	CAT A
Brazil Anatel	N/A	C2	C2	C2	C2	C2	C2	C2	C2	C2	C2
Canada SRSP	N/A	310.5	N/A	312.7B	314.5A	Note 1	Note 2	N/A	N/A	N/A	338.6A
Andrew RPE Number	7075A	7085B, 7086B*	7083A	7004	7008	7012A	7016A	7020A	7024A	7028	7032A

Note 1: Meets Canada SRSP 317.8A, 318.5, 318.8
Note 2: Meets Canada SRSP 312.2A, 321.8B

** Use for FCC band (10.5–10.7 GHz)*

One Company. A World of Solutions.

VHLP2-23 - Radiation Pattern Envelope

ANDREW

ANDREW
RPE: 7016

Engineering Approved:
25 October 2004

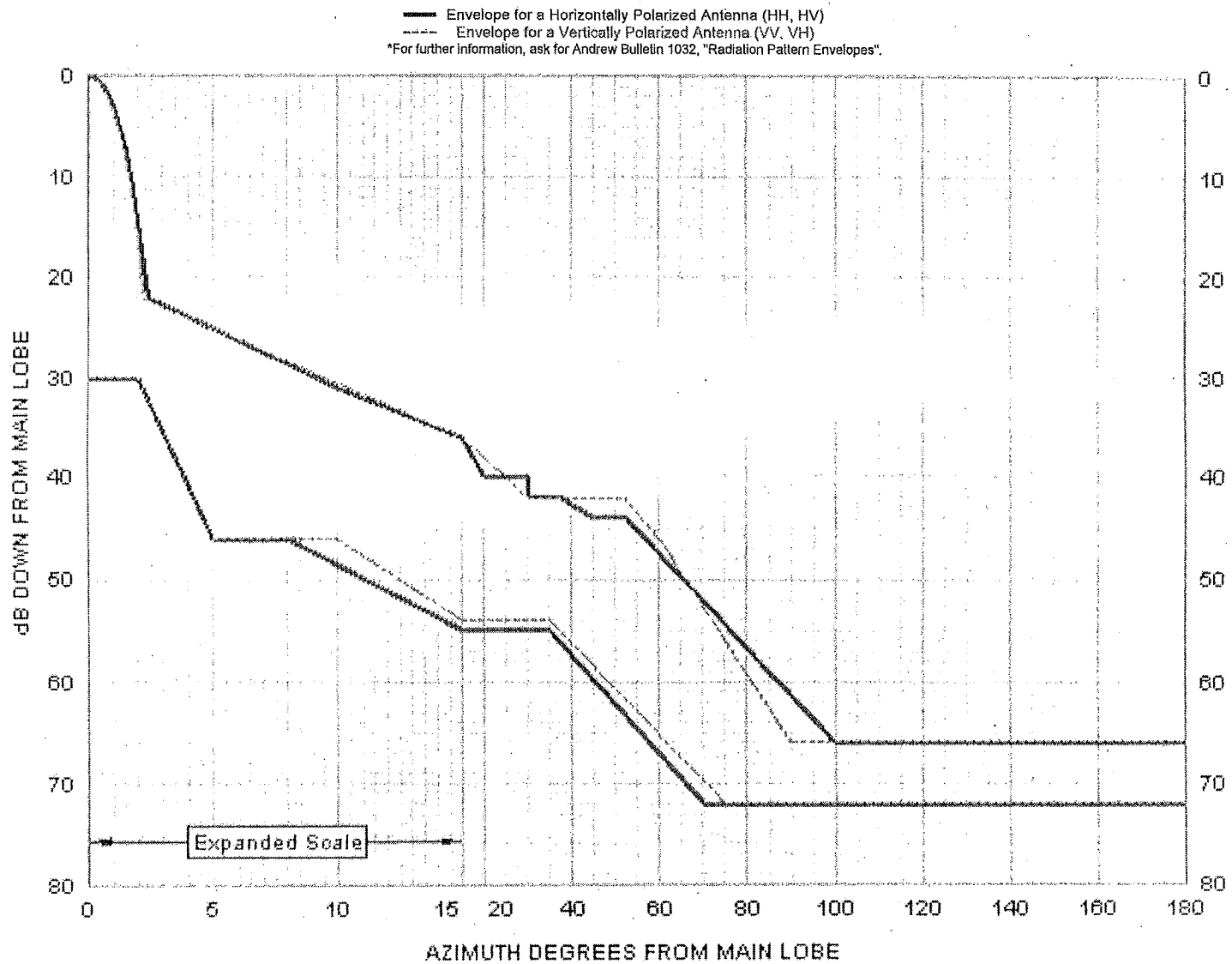

DB844H65E-XY

Directed Dipole Antenna

Decibel®
Base Station Antennas

- Excellent azimuth roll-off, 15-20% reduction in cell to cell overlap
- Superior front to back ratio
- Low profile, low wind load for easy zoning
- Outstanding field record, with thousands of units deployed, world wide

ELECTRICAL

Frequency (MHz) :	806 - 896	870 - 960
Polarization :	Vertical	Vertical
Gain (dBd/dBi) :	13.1/15.2	13.3/15.4
Azimuth BW (Deg.):	65	65
Elevation BW (Deg.):	15	15
Beam Tilt (Deg.):	0	0
USLS* (dB) :	15	15
Front-To-Back Ratio* (dB) :	40	40
VSWR :	<1.5:1	<1.5:1
Max. Input Power (Watts) :	500	500
Impedance (Ohms) :	50	50
Lightning Protection :	DC Ground	DC Ground

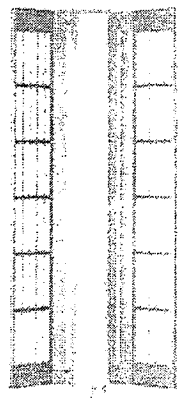

MECHANICAL

Weight :	9.0 kg (20 lb)
Dimensions (LxWxD) :	1,219 x 521 x 229 mm (48 x 20.5 x 9 in)
Max. Wind Area :	0.40 m² (4.3 ft²)
Max. Wind Load (@ 100 mph) :	1,071.9 N (241 lbf)
Max. Wind Speed :	201 km/h (125 mph)
Hardware Material :	Galvanized Steel
Connector Type :	7-16 DIN - Female (1, Back)
Color :	Light Gray
Standard Mounting Hardware :	DB380
Standard Downtilt Mounting Hardware :	DB5083

Andrew Corporation
2601 Telecom Parkway
Richardson, Texas U.S.A 75082-3521
Tel: 214.631.0310

Fax: 214.631.4706
Toll Free Tel: 1.800.676.5342
Fax: 1.800.229.4706
www.andrew.com

* - Indicates Typical

6/21/2006

dbtech@andrew.com

Information correct at date of issue but may be subject to change without notice.

DB844H65E-XY

Directed Dipole Antenna

Decibel®
Base Station Antennas

AZIMUTH PATTERN

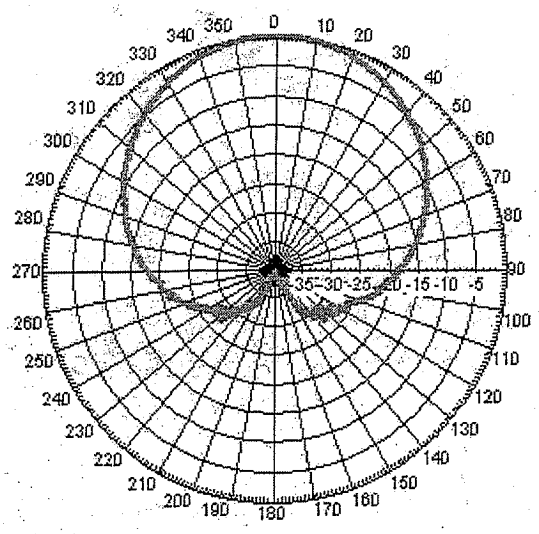

Freq: 835 MHz, Tilt: 0

ELEVATION PATTERN

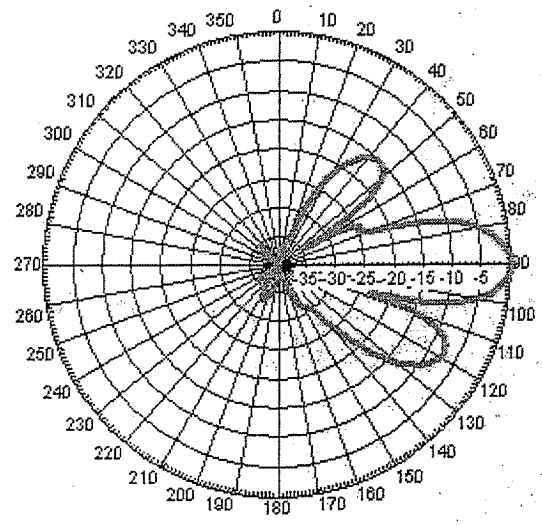

Freq: 835 MHz, Tilt: 0

Andrew Corporation
2601 Telecom Parkway
Richardson, Texas U.S.A 75082-3521
Tel: 214.631.0310

Fax: 214.631.4706
Toll Free Tel: 1.800.676.5342
Fax: 1.800.229.4706
www.andrew.com

* - Indicates Typical

6/21/2006

dbtech@andrew.com

Information correct at date of issue but may be subject to change without notice.

EMS Wireless

FS65-11-XXXA2

806 MHz - 896 MHz (A)

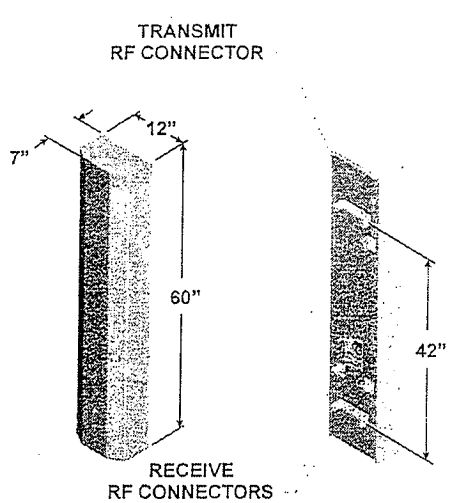

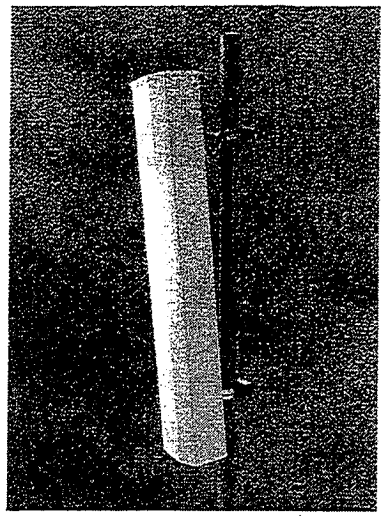

65° beamwidth

10.8 dBd gain

Vertical Tx
± 45° Rx

60 inch

SPECIFICATIONS

Electrical

Azimuth Beamwidth	65°
Elevation Beamwidth	26°
Gain	10.8 dBd (12.9 dBi)
Transmit Polarization	Vertical
Receive Polarization	Slant, ±45°
Transmit Port to Receive Port Isolation	≥ 40 dB
Receive Port to Receive Port Isolation	≥ 20 dB
Front-to-Back Ratio	≥ 24 dB
Electrical Downtilt Options	0°, 5°
VSWR	1.35:1 Max
Connectors	3;Type N or 7-16 DIN (female)
Power Handling	500 Watts CW
Passive Intermodulation	≤ -147 dBc [2x20W (+43 dBm)]
Lightning Protection	Chassis Ground

Mechanical

Dimensions (L x W x D)	60in x 12in x 7in (152.4 cm x 30.5 cm x 17.8 cm)
Rated Wind Velocity	130 mph (209 kph)
Equivalent Flat Plate Area	5ft^2 (.46 m^2)
Front Wind Load @ 100 mph (161 kph)	144 lbs (640 N)
Side Wind Load @ 100 mph (161 kph)	84 lbs (373 N)
Weight	27 lbs (12.3 kg)

Note: Patent Pending and US Patent number 5, 757, 246.

Values and patterns are representative and variations may occur. Specifications may change without notice due to continuous product enhancements. Digitized pattern data is available from the factory or via the web site www.emswireless.com and reflect all updates.

MOUNTING OPTIONS

Model Number	Description	Comments
MTG-P00-10	Standard Mount (Supplied with antenna)	Mounts to Wall or 1.5 inch to 5.0 inch O.D. Pole (3.8 cm to 12.7 cm)
MTG-S02-10	Swivel Mount	Mounting kit providing azimuth adjustment.
MTG-DXX-20*	Mechanical Downtilt Kits	0° - 10° or 0° - 15° Mechanical Downtilt
MTG-CXX-10*	Cluster Mount Kits	3 antennas 120° apart or 2 antennas 180° apart
MTG-C02-10	U-Bolt Cluster Mount Kit	3 antennas 120° apart . 4.5" O.D. pole.
MTG-TXX-10*	Steel Band Mount	Pole diameters 7.5" - 45"

* Model number shown represents a series of products. See mounting options section for specific model number.

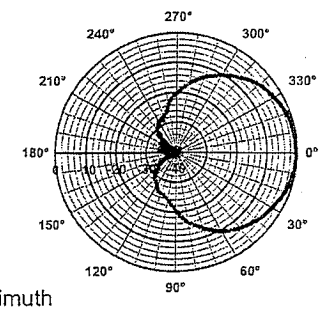

Azimuth

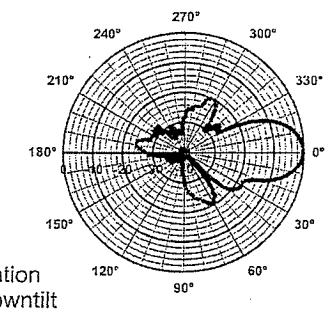

Elevation
0° Downtilt

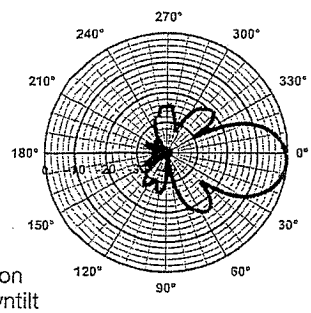

Elevation
5° Downtilt

EMS Wireless

RR65-18-XXDPL2

DualPol® Polarization

1850 MHz - 1990 MHz

OptiRange™ Suppressor™

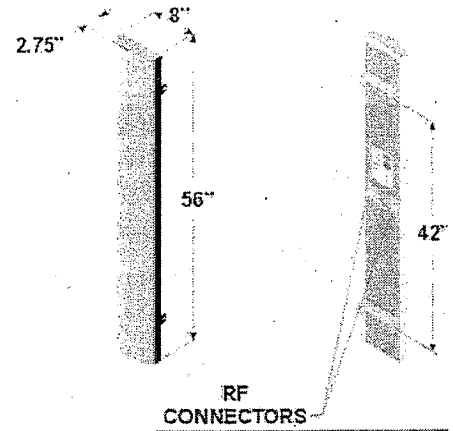

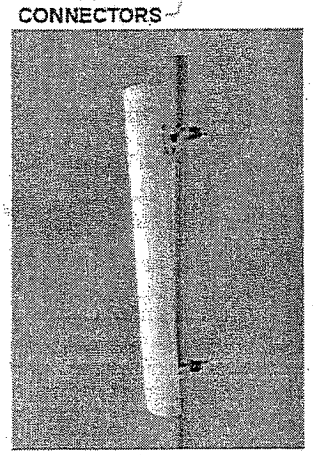

Electrical Specifications

Azimuth Beamwidth (-3 dB)	65°
Elevation Beamwidth(-3 dB)	6°
Elevation Sidelobes (Upper)	≥ 18 dB
Gain	17.5 dBi (15.4 dBd)
Polarization	Dual Linear Slant (± 45°)
Port-to-Port Isolation	≥ 30 dB
Front-to-Back Ratio	≥ 30 dB
Electrical Downtilt Options	0°, 2°, 4°, 6°
VSWR	1.35:1 Max
Connectors	2; 7-16 DIN (female)
Power Handling	250 Watts CW
Passive Intermodulation	≤ -150 dBc [2 x 20 W (+ 43 dBm)]
Lightning Protection	Chassis Ground

Mechanical Specifications

Dimensions (L x W x D)	56 in x 8 in x 2.75 in (142 cm x 20.3 cm x 7.0 cm)
Rated Wind Velocity	150 mph (241 km/hr)
Equivalent Flat Plate Area	3.1ft² (.29 m²)
Front Wind Load @ 100 mph (161 kph)	90 lbs (400 N)
Side Wind Load @ 100 mph (161 kph)	31 lbs (139 N)
Weight	18 lbs (8.2 kg)

Mounting Options

MTG-P00-10, MTG-S02-10, MTG-DXX-20*, MTG-CXX-10*, MTG-C02-10, MTG-TXX-10*

*Note: *Model number shown represents a series of products. See Mounting Options section for specific model number.*

Patterns

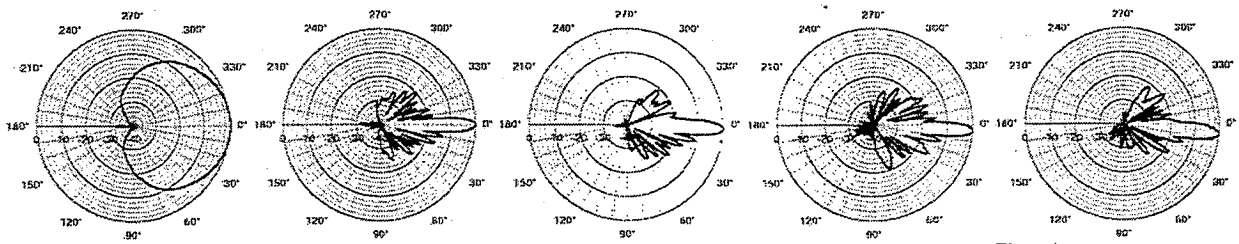

Azimuth | Elevation 0° Downtilt | Elevation 2° Downtilt | Elevation 4° Downtilt | Elevation 6° Downtilt

Revised 04/05/02

+1 770.582.0555 ext. 5310 • Fax +1 770.729.0036
www.emswireless.com

Optimizer® Panel Dual Polarized Antenna equipped with (2) AISG 2.0 ACU motors

Product Description

A combination of two X-Polarized antennas in a single radome, this pair of variable tilt antennas provides exceptional suppression of all upper sidelobes at all downtilt angles. It also features a wide downtilt range. This antenna is optimized for performance across the entire AWS frequency band (1710-2155 MHz). The antenna comes pre-connected with two antenna control units (ACU).

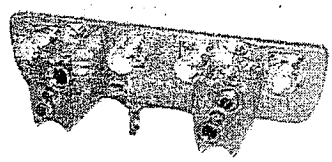

Features/Benefits

- **Variable electrical downtilt - provides enhanced precision in controlling intercell interference. The tilt is infield adjustable 0-10 deg.**
- **High Suppression of all Upper Sidelobes (Typically <-20dB).**
- **Gain tracking – difference between AWS UL (1710-1755 MHz) and DL (2110-2155 MHz) <1dB.**
- **Two X-Polarised panels in a single radome.**
- **Azimuth horizontal beamwidth difference <4deg between AWS UL (1710-1755 MHz) and DL (2110-2155 MHz)**
- **Low profile for low visual impact.**
- **Dual polarization; Broadband design.**
- **Includes (2) AISG 2.0 Compatible ACU-A20-N antenna control units**

Technical Specifications

Electrical Specifications

Frequency Range, MHz	1710-2170
Antenna Type	Panel Dual Polarized
Electrical Down Tilt Option	Variable
Gain, dBi (dBd)	18.4 (16.3)
Electrical Downtilt, deg	0-10 , 0-10
Horizontal Beamwidth, deg	65
VSWR	< 1.5:1
Vertical Beamwidth, deg	5.9 to 7.7
1st Upper Sidelobe Suppression, dB	> 18 (typically > 20)
Upper Sidelobe Suppression, dB	> 18 all (typically > 20)
Polarization	Dual pol +/-45°
Front-To-Back Ratio, dB	>26 (typically 28)
Maximum Power Input, W	300
Isolation between Ports, dB	> 30
Lightning Protection	Direct Ground
3rd Order IMP @ 2 x 43 dBm, dBc	> 150 (155 Typical)

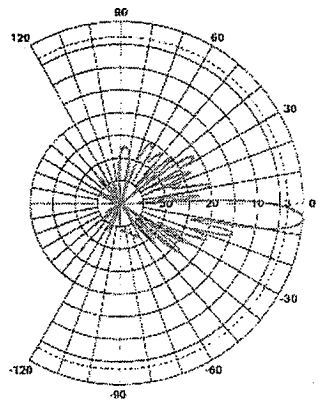

Vertical Pattern

Mechanical Specifications

Rated Wind Speed, km/h (mph)	160 (100)
Survival Wind Speed, km/h (mph)	200 (125)
Max Wind Loading Area, m² (ft²)	0.64 (6.6)
Maximum Thrust @ Rated Wind, N (lbf)	787 (177)
Front Thrust @ Rated Wind, N (lbf)	787 (177)
Reflector Material	Aluminum
Radiating Element Material	Brass
Radome Material	Fiberglass
Connector Type	(4) 7-16 DIN Female
Connector Location	Bottom
Mount Type	Downtilt Kit w/Scissor Kit
Mounting Hardware	APM40-2 + APM40-E2
Weight w/o Mtg Hardware, kg (lb)	18.5 (40.7)
Packing Dimensions, HxWxD, mm (in)	1550 x 420 x 260 (61 x 16.5 x 10.3)
Overall Length, m (ft)	1.42 (4.6)
Dimensions - HxWxD, mm (in)	1420 x 337 x 80 (55.9 x 13.3 x 3.15)
Shipping Weight, kg (lb)	25 (55)

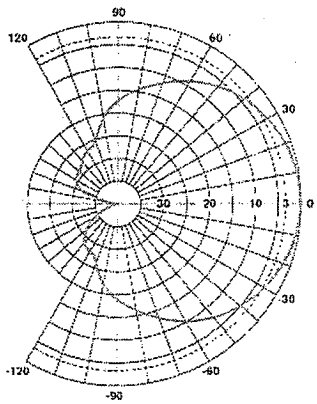

Horizontal Pattern

* This data is provisional and subject to change.

All information contained in the present datasheet is subject to confirmation at time of ordering.

Existing

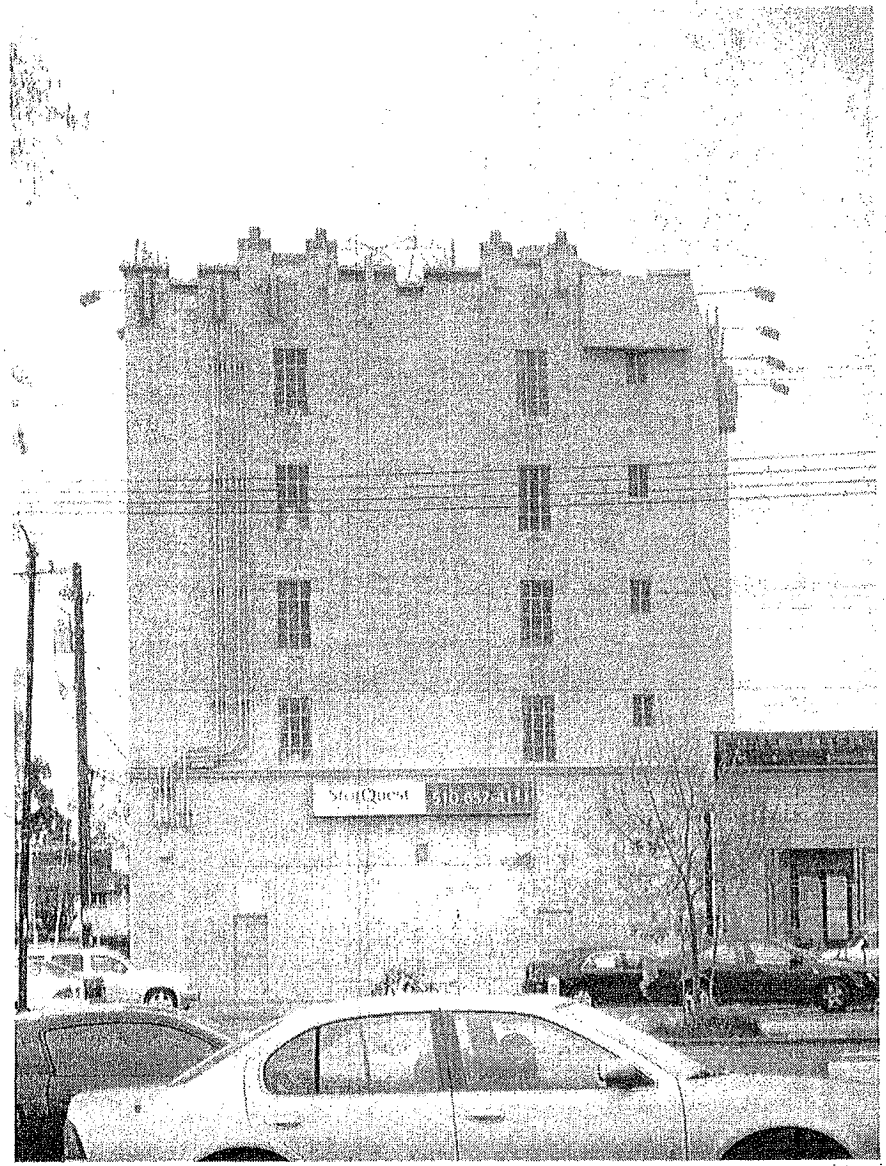

(View from Shattuck Ave. towards West)

Proposed

December 21, 2010

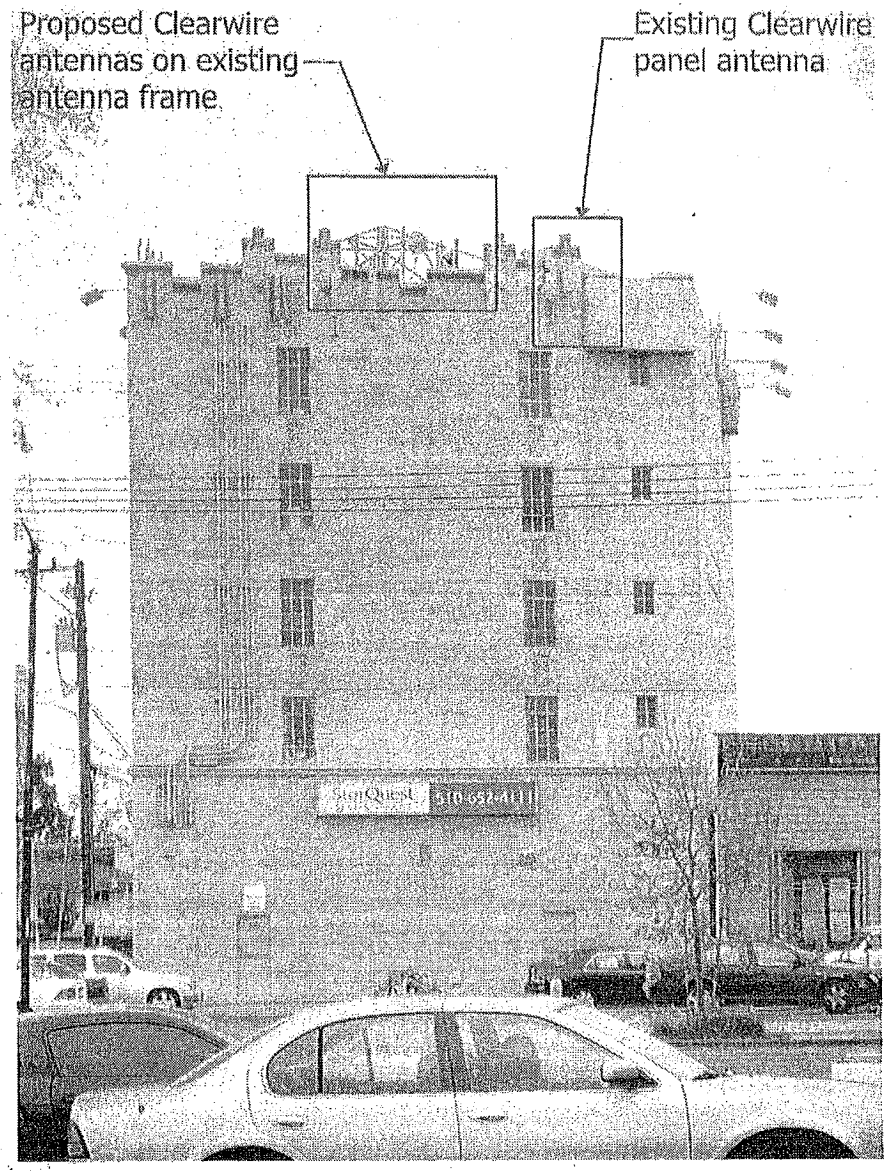

East Elevation

ATTACHMENT E

CA-SFO0126A
Storquest-MOD

TRK ENGINEERING

- CMD10-281 -

Existing

December 21, 2010

Proposed

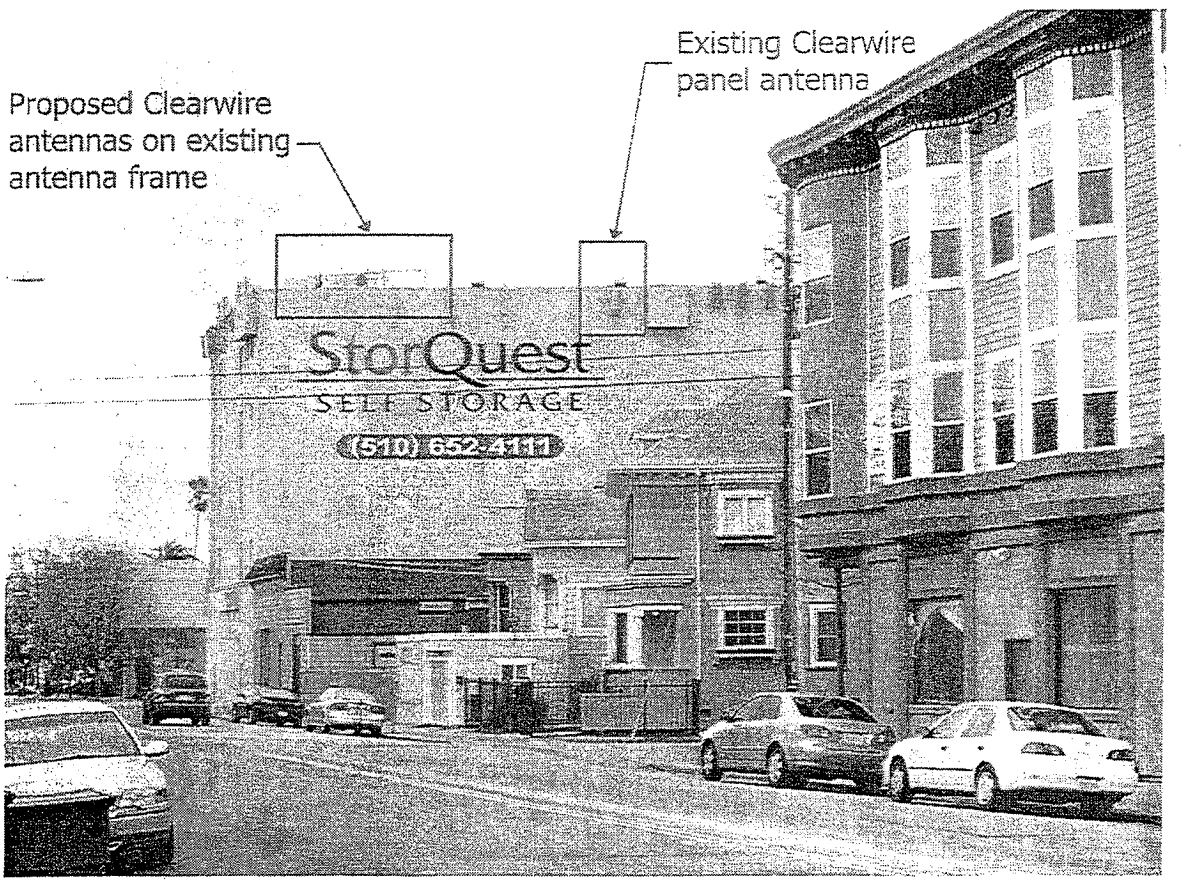

(View from 48th St/ Shattuck Ave towards South)

CA-SFO0126A

Northeast Elevation

Storquest MOD